Content

- Content.....P 1-1
- Foreword.....P 1-2
- Excellence.....P 1-3
- Product Feature.....P 1-4
- Product Certification.....P 1-5
- Electrical Characteristics of Low Voltage Busway.....P 1-8
- Product Specifications.....P 1-9
- Selection of Standard Parts (Low Voltage Series).....P 1-15
- Product Installation.....P 1-18
- Assembly Diagrams of Low Voltage Busway Junction.....P 1-19
- Low Voltage Busway Horizontal Hanger Standard.....P 1-20
- Low Voltage Busway Vertical Hanger Standard.....P 1-21
- Dimensions of Standard Terminal Elements for Low Voltage Busway.....P 1-22
- Dimensions of Standard Terminal Elements Copper Plate for Low Voltage Busway.....P 1-24
- Opening Requirement of Standard Terminal Elements and Switchgear for Low Voltage Busway...P 1-25
- Low Voltage Busway Terminal Element and Switchgear Standard Guidline.....P 1-26
- Low Voltage Busway Terminal Element and Generator Connection Standard.....P 1-27
- Plug-in Unit.....P 1-28
- Product Design Theory.....P 1-29
- Low Voltage Busway Routine Test Items.....P 1-30
- Projects Reference List.....P 1-31





Foreword

TAIAN-ETACOM TECHNOLOGY was formally called TAIAN Electric Co. Ltd. (Teco Group). With the drastic increase in the requirement of safety and stability for power distribution in the domestic hitech industry, commercial building, and public engineering. However the traditional power cable and metal-enclosure busway can no longer fulfill the requirement stated above.

Therefore, the team of Teco Group imported the world leading BUSWAY technology manufacturer, ETACOM betobar-r of Belgium, for the Taiwan market in1988.
The product has the excellent features of electrical characteristics and mechanical strength, fire and water proof, anti-corrosion, smaller size, and maintenance free.
All these features are better than the traditional metal-enclosure busway.
Therefore the cast resin busway are popularly used in the industry field.



Due to the delivery period of import goods are always too long to fulfill the needs of customers. Therefore,TAIAN and ETACOM were jointed as TAIAN-ETACOM in October 1999. Moreover, TAIAN-ETACOM introduced the producing technology of ETACOM betobar-r busway to provide the high quality,short delivery period and completely customer service.

We commit to provide the best completely services to our customers. We hope our customers keep giving us their support and encouragement. Your comment will be highly appreciated.



Excellence

1. Low voltage products meet the standard of IEC 60439-1、IEC 60439-2、IEC 61439、CNS 14286.
2. Compact, easy to install, no emission of toxic gas.
3. The purity of conductor is 99.9% for copper with conductivity above 98% IACS.
4. Voltage drop low、high short-circuit current withstand, carried out overload 20% for 2 hours.
5. Degree of protection tested in accordance with IEC 60529, IP68. Mechanical Impacts IK10.
6. Fire-proof property:
   At 750℃ for 3 hours tested in accordance with IEC 60331-21.
   At 840℃ for 30 minutes tested in accordance with CNS 14286.
7. Fire-proof wall partitions meet S120 in accordance with IEC 60332-3, and meet NBN 713-020 add3.
8. Fire-proof partitions in the piping in accordance with IEC 60332-3.
9. Anti-explosion certification meets EN 50028 no. EEx m Ⅱ.
10. Mixing excellent material such as non-organic volcanic rock with small amount of resin made of busway. With excellent insulation and heat dissipation properties.
11. Low EMC.
12. Insulation level of class B 130℃.
13. Products have shown excellent results for at least 40 years, and passed aging test with safety operation over 50 years.
14. Maintenance free.
15. CE and UL certified.

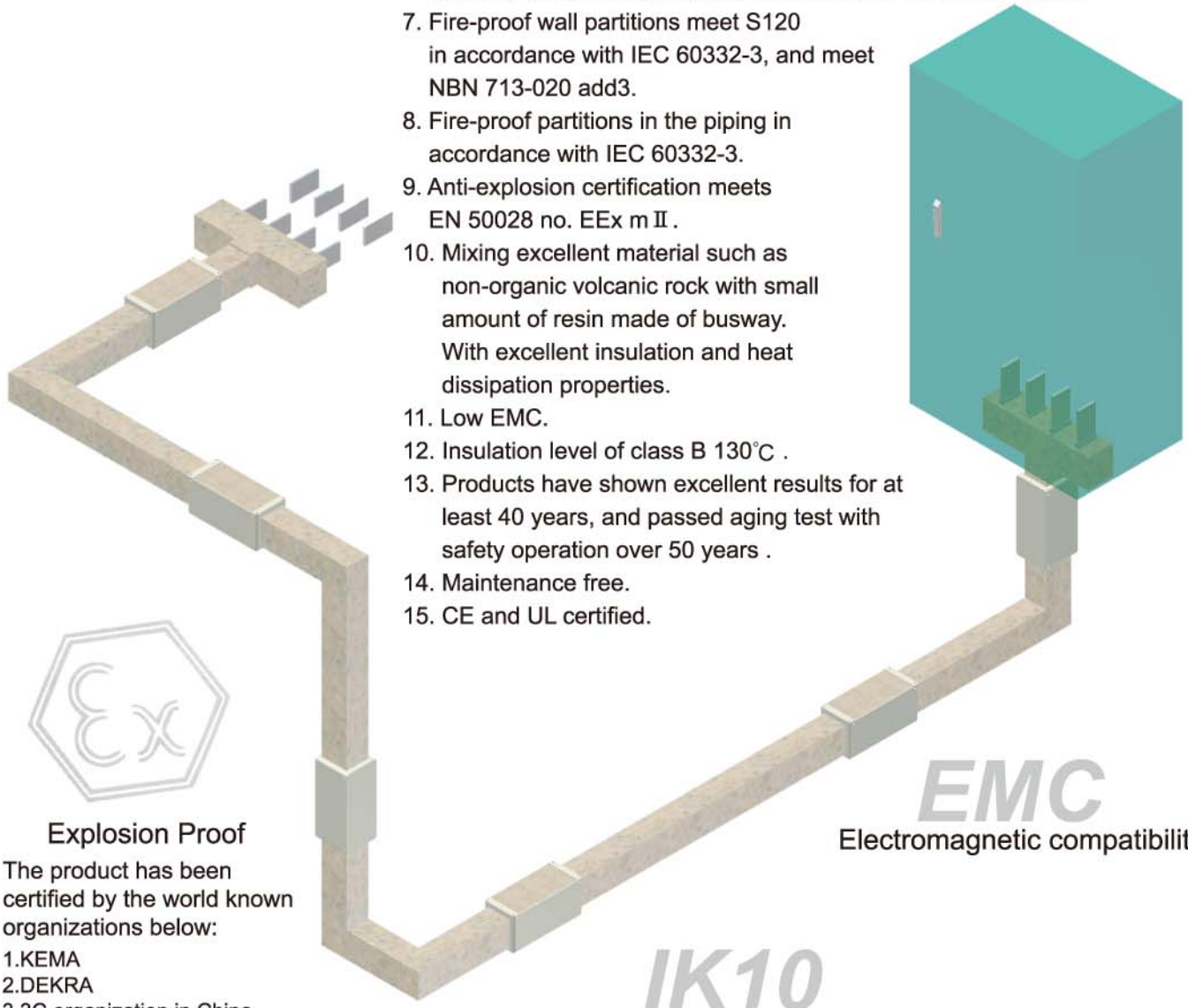

Explosion Proof

The product has been certified by the world known organizations below:

1.KEMA
2.DEKRA
3.3C organization in China.
4.Taiwan Electric Research & Testing Center.
5.Fireproof Lab. of National Cheng Kung University.

EMC
Electromagnetic compatibility

IK10
Mechanical Impacts

E30
Fire Proof

CNS 14286
Withstand Fire Test

S120
Fire Partitions

IP68
Degree of protection



Product Feature

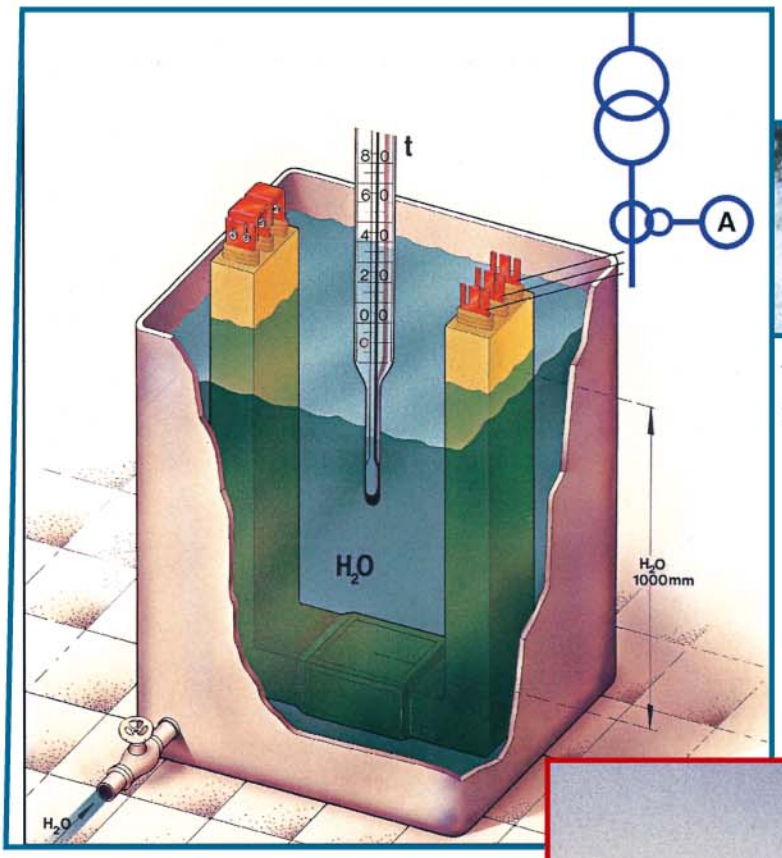



Waterproof

The water-proof tested (junction included) in accordance with IEC 60529 IP68.

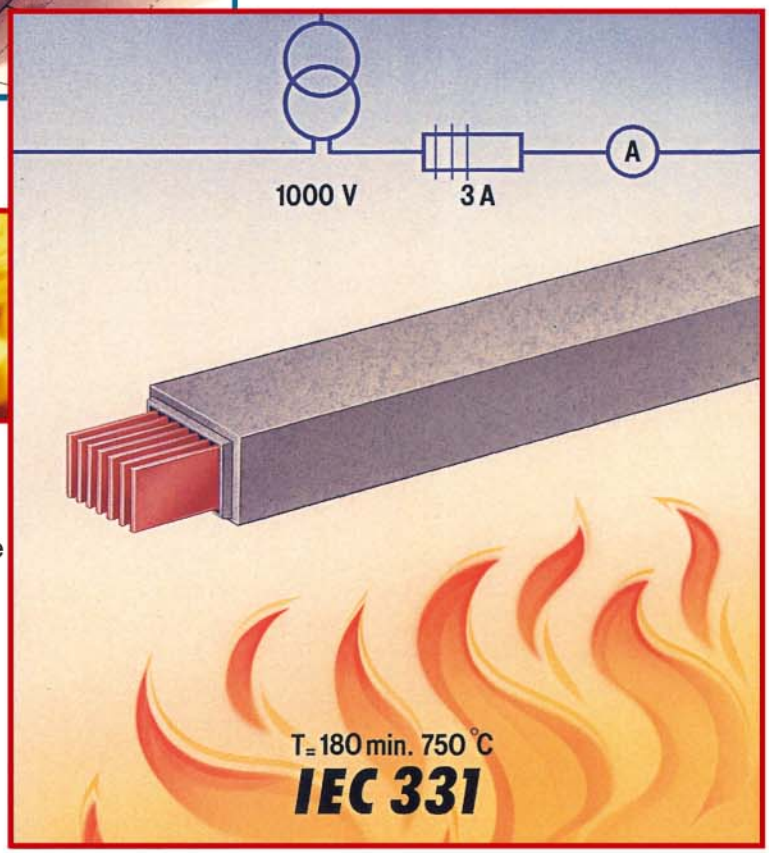



Fireproof

The fire-proof at 750°C for 3 hours tested in accordance with IEC 60331-21.
At 840°C for 30 minutes tested in accordance with CNS 14286 and JIS 8364.
At 950°C for 3 hours tested in accordance with BS 6387.



Product Certification



DEKRA

CERTIFICATE

Number: 61562

The management system of:

Taian-Etacom Technology Co., Ltd.
Taoyuan Hsien, Taiwan R.O.C.

including the implementation meets the requirements of the standard:

ISO 9001:2008

Scope:
Design and Manufacture and Sales of TECOBAR (Cast-Resin Insulated Busway Systems)

Certificate expiry date: 1 February 2013
Certified for the first time: 1 February 2001
Certificate effective date: 1 February 2010

DEKRA Certification B.V.

drs. G.J. Zoetbrood
Managing Director

ing. H.J. Bettman
Certification Manager

© Integral publication of this certificate and adjoining reports is allowed

All testing, inspection, auditing and certification activities of the former KEMA Quality are an integral part of the DEKRA Certification Group.

DEKRA Certification B.V. Utrechtseweg 310, 6812 AR Arnhem P.O. Box 5185, 6802 ED Arnhem, The Netherlands
T +31 26 356 2000 F +31 26 352 5800 www.dekra-certification.com Company registration 09080396

ISO 9001:2008 certificate



DEKRA

TEST CERTIFICATE

KEMA Quality

TEST CERTIFICATE

Issued to: Taian-Etacom Technology Co. Ltd
No. 158, Shin Jiang road
Yang-Mei Taoyuan County
Taiwan R.O.C.

For the product: low-voltage busbar trunking system

Trade name: TECOBAR

Type/Model: LB16EC

Ratings: Uv 1000 V, Ui 1000 V, In 3269 / 3443 A at 60 Hz, Uimp 12 kV, Icw 100 kA – 1,0 s 220 kA peak

Manufactured by: Taian-Etacom Technology Co. Ltd
No. 158, Shin Jiang road
Yang-Mei Taoyuan County
Taiwan R.O.C.

Subject: Type tests

Requirements: IEC 60439-2, ed. 3.1 2005-10; Clauses: 8.2.1, 8.2.2, 8.2.3, 8.2.4, 8.2.5, 8.2.9, 8.2.10, 8.2.12 and 8.2.13

Remarks: Busbar trunking system consists of flange, joint and straight lengths, conductor material copper, cast-resin insulated

This Test Certificate is granted on account of an examination by DEKRA, the results of which are laid down in report no. 2144419.01-INC, dated 30 October, 2011.

The examination has been carried out on one single specimen of the product, submitted by the manufacturer. The Attestation does not include an assessment of the manufacturer's production. Conformity of his production with the specimen tested by DEKRA is not the responsibility of DEKRA.

Arnhem, 30 October, 2011 Number: 2144419.100

DEKRA Certification B.V

H.R.M. Barends
Certification Manager

© Integral publication of this certificate and adjoining reports is allowed

All testing, inspection, auditing and certification activities of the former KEMA Quality are an integral part of the DEKRA Certification Group.

DEKRA Certification B.V. Utrechtseweg 310, 6812 AR Arnhem P.O. Box 5185, 6802 ED Arnhem, The Netherlands
T +31 26 356 2000 F +31 26 352 5800 www.dekra-certification.com Company registration 09080396

DEKRA

KEMA type test certificate.



内政部消防安全設備審核認可書

内 政 部

Approval of safety appliances by National Fire Agency.



中国国家强制性产品认证证书

主任：李怀林

中国质量认证中心

A 0454687

Certified by China Quality Certification Center.



Product Certification

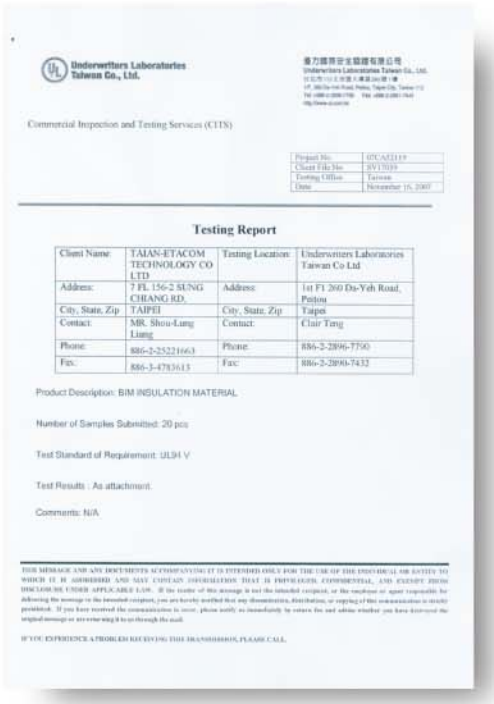

Underwriters Laboratories Taiwan Co., Ltd.

Commercial Inspection and Testing Services (CITS)

Project No.	07CA21119
Client File No.	SV17039
Testing Office	Taiwan
Date	November 16, 2007

Testing Report

Client Name:	TAIAN-ETACOM TECHNOLOGY CO LTD	Testing Location:	Underwriters Laboratories Taiwan Co Ltd
Address:	7 FL 156-2 SUNG CHIANG RD.	Address:	1st Fl 260 Da-Yeh Road, Peitou
City, State, Zip	TAIPEI	City, State, Zip	Taipei
Contact:	MR. Shou-Lung Liang	Contact:	Clair Tang
Phone:	886-2-25221663	Phone:	886-2-2896-7750
Fax:	886-3-4783613	Fax:	886-2-2890-7432

Product Description: BIM INSULATION MATERIAL

Number of Samples Submitted: 20 pcs

Test Standard of Requirement: UL94 V

Test Results : As attachment.

Comments: N/A

Fire withstand examined in accordance with UL 94V



行政院環境保護署

環境保護產品第二類產品證明書

茲據　安達康科技股份有限公司

申請環境保護產品第二類產品認證，經核相符，特予認證並摘錄認證事項如下：

一、廠商名稱：安達康科技股份有限公司 Taian-Etacom Technology

二、廠商地址：台北市中山區松江路 156-1 號 8 樓 Gf., No.156-1, Songjiang Rd., Zhongshan Dist., Taipei City 104, Taiwan (R.O.C.)

三、代表人姓名：劉明達 Ming-Te, Hu

四、產品名稱：全樹脂式軟體匯流排 LA 系列 Cast-Resin Insulated Busway Systems Type LA

五、生產廠場：安達康科技股份有限公司 Taian-Etacom Technology 桃園縣楊梅市新江路 158 號 No.158, Xinjiang Rd., Yangmei City, Taoyuan County 326, Taiwan (R.O.C.)

六、產品用途：配電 Distribution

七、環保特性：節省電源及減少廢電機污染 Saves Energy And Reduces Pollutions Caused By Mishandling Waste As Electric Cable

八、有效期限：自中華民國九十九年九月二十八日起至中華民國一〇二年九月二十七日止

行政院環境保護署署長 Minister Shen, Stephen Shu-Liang Environmental Protection Administration, Executive Yuan, R.O.C. (Taiwan)

中華民國九十九年九月二十七日

（本證明僅供機關採購業務證明用）

Green Mark



LCIE

Fram ATEX

TEST REPORT N° 60058075-559042

DELIVERED TO :	TET N°158 SHIN ROAD 326 YANG-MEI TAOYUAN HSIEN TAIWAN ROC
SUBJECT :	Tested Product: POLYMER CONCRETE; Reference BIM-TW-GY253-07 ; On the basis of the LCIE 07 ATEX 0003U certified product

Date of the tests : July 20th, 2007 to December 4th, 2007

This document contains 12 pages

Appendix : C survey report Nr.315 622

Fontenay-aux-Roses, January 07th, 2008

The Technical Manager,
Name: David RAVEAU

Signed:

Test Report of LCIE
1) Light resistance tests.
2) Dielectric rigidity tests.
3) Electrostatic charge tests.



LUL TECHNOLOGY SERVICES

LUL Technology Services
Fram Fish House
Brick Lane
Acton, London W3 8RP
Telephone: +44 (0)171 918 6439
Facsimile: +44 (0)171 918 6406

Report No. C10399

NAMAS TESTING No.0674

FIRE SAFETY ASSESSMENT OF BETOBAR-R BUSBAR SUPPLIED BY PIRELLI CONSTRUCTION

Prepared for: Mr. M. Payne
Pirelli Construction
PO Box 6, Leigh Road, Eastleigh, Hampshire, SO50 9YE

Issue Date: 19-Aug-1996

Reference: 6220-DJS-C10399-TSK14750

Prepared by: D.J.Songhurst

Signature:

Certified by: J.I.Uddoh

Signature:

© LUL Technology Services
Opinions and interpretations expressed herein are outside the scope of NAMAS accreditation

Low smoke and non-toxic gas examined by LUL

Product Certification



台灣大電力研究試驗中心

大中試 IP92150 號
共 3 頁第 1 頁

低壓匯流排
外殼防塵、防水（IP）保護等級測試報告

委 試 者：安達康科技股份有限公司
委試者地址：桃園縣楊梅鎮新江路 158 號
製 造 者：安達康科技股份有限公司
製造者地址：桃園縣楊梅鎮新江路 158 號
產品名稱：低壓匯流排
型 號：LB16EC-9-960 (3150A)
外觀尺寸：長 1000 mm、寬 168 mm、深 200 mm
依據標準：IEC 60529 (2001-02)
取樣程序：廠商自送
收件日期：92 年 09 月 29 日
測試日期：92 年 10 月 21 日
測試人員：鄧金台、陳勝興
測試結果：低壓匯流排(型號：LB16EC-9-960 (3150A))外殼符合 IP68 等級，測試結果參考第二頁。

大電力研究試驗中心
試驗部經理

IP68 certified in accordance with IEC 60529.

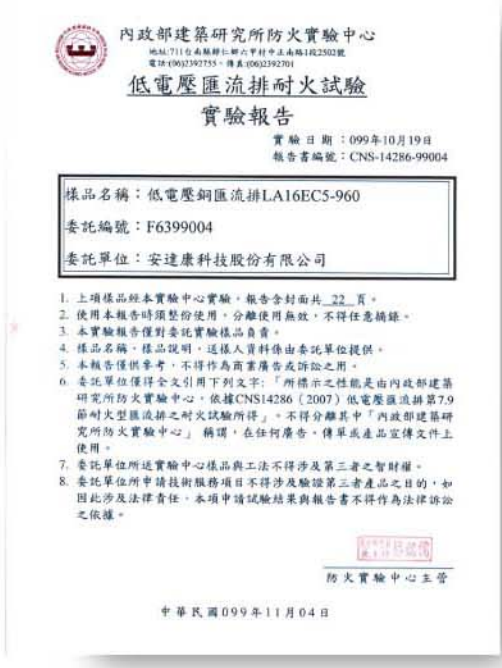

內政部建築研究所防火實驗中心
地址:711台南縣歸仁鄉六甲村中正南路1段2502號
電話:(06)2392755、傳真:(06)2392701

低電壓匯流排耐火試驗
實驗報告

實驗日期：099年10月19日
報告書編號：CNS-14286-99004

樣品名稱：低電壓銅匯流排LA16EC5-960
委託編號：F6399004
委託單位：安達康科技股份有限公司

1. 上項樣品經本實驗中心實驗，報告含封面共 22 頁。
2. 使用本報告時須整份使用，分離使用無效，不得任意摘錄。
3. 本實驗報告僅對委託實驗樣品負責。
4. 樣品名稱、樣品說明，送樣人資料係由委託單位提供。
5. 本報告僅供參考，不得作為商業廣告或訴訟之用。
6. 委託單位僅得全文引用下列文字:「所標示之性能是由內政部建築研究所防火實驗中心，依據CNS14286（2007）低電壓匯流排第7.9節耐火型匯流排之耐火試驗所得」。不得分離其中「內政部建築研究所防火實驗中心」 稱謂，在任何廣告、傳單或產品宣傳文件上使用。
7. 委託單位所送實驗中心樣品與工法不得涉及第三者之智財權。
8. 委託單位所申請技術服務項目不得涉及驗證第三者產品之目的，如因此涉及法律責任，本項申請試驗結果與報告書不得作為法律訴訟之依據。

防火實驗中心主管

中華民國099年11月04日

Fire proof examined in accordance with CNS 14286 840℃ for 30 minutes.

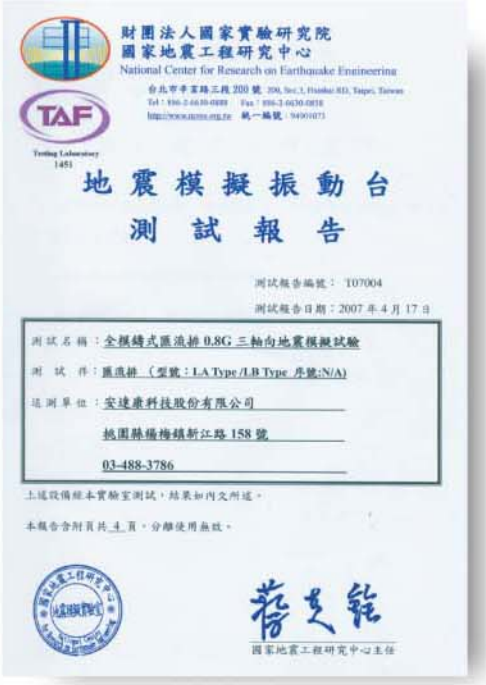

財團法人國家實驗研究院
國家地震工程研究中心
National Center for Research on Earthquake Engineering
台北市平富路三段 200 號 200, Sec.3, Hsinhai RD, Taipei, Taiwan
Tel：886-2-6630-0888 Fax：886-2-6630-0858
http://www.nuree.org.tw 統一編號：94901073

TAF
Testing Laboratory
1451

地震模擬振動台
測試報告

測試報告編號：T07004
測試報告日期：2007 年 4 月 17 日

測試名稱：全模鑄式匯流排 0.8G 三軸向地震模擬試驗
測 試 件：匯流排 （型號：LA Type /LB Type 序號:N/A)
送測單位：安達康科技股份有限公司
桃園縣楊梅鎮新江路 158 號
03-488-3786

上述設備經本實驗室測試，結果如內文所述。

本報告含附頁共 4 頁，分離使用無效。

蔡克銓
國家地震工程研究中心主任

National Center for Research on Earthquake Engineering-0.8g in 3 - axis sesmic simulation test.

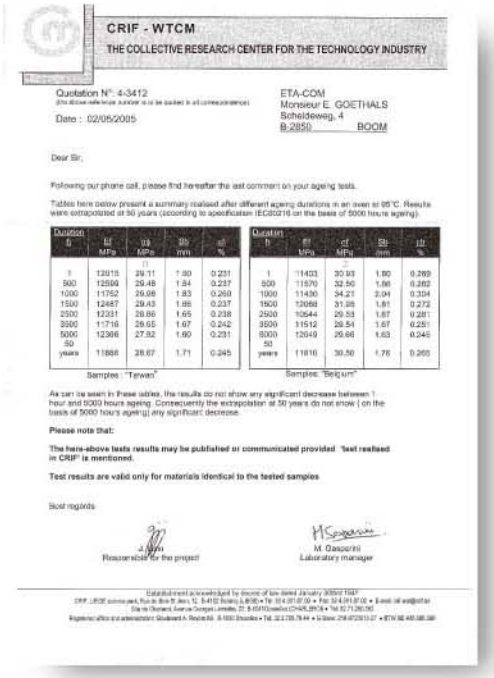

CRIF - WTCM
THE COLLECTIVE RESEARCH CENTER FOR THE TECHNOLOGY INDUSTRY

Quotation N°: 4-3412
(the above reference number is to be quoted in all correspondence)
Date : 02/05/2005

ETA-COM
Monsieur E. GOETHALS
Scheldeweg, 4
B-2850 BOOM

Dear Sir,

Following our phone call, please find hereafter the last comment on your ageing tests.

Tables here below present a summary realised after different ageing durations in an oven at 95°C. Results were extrapolated at 50 years (according to specification IEC60216 on the basis of 5000 hours ageing).

Duration h	Ef MPa	σa MPa	Sb mm	εf %
1	12915	29.11	1.80	0.231
500	12599	29.48	1.84	0.237
1000	11752	29.98	1.83	0.260
1500	12487	29.43	1.86	0.237
2500	12331	28.86	1.65	0.238
3500	11716	28.65	1.67	0.242
5000	12366	27.92	1.60	0.231
50 years	11886	28.67	1.71	0.245

Samples : "Taiwan"

Duration h	Ef MPa	σf MPa	Sb mm	εf %
1	11433	30.93	1.80	0.269
500	11570	32.50	1.86	0.282
1000	11430	34.21	2.04	0.304
1500	12068	31.35	1.81	0.272
2500	10544	29.53	1.67	0.281
3500	11512	29.54	1.67	0.251
5000	12049	29.66	1.63	0.245
50 years	11816	30.50	1.76	0.265

Samples: "Belgium"

As can be seen in these tables, the results do not show any significant decrease between 1 hour and 5000 hours ageing. Consequently the extrapolation at 50 years do not show (on the basis of 5000 hours ageing) any significant decrease.

Please note that:

The here-above tests results may be published or communicated provided "test realised in CRIF" is mentioned.

Test results are valid only for materials identical to the tested samples

Best regards

J. [illegible]
Responsible for the project

M. Gasperini
Laboratory manager

Aging test report.



1. Title:TECOBAR Low Voltage Cast-Resin Insulated Busway.

2. Product Description:

TECOBAR Low Voltage Cast-Resin Insulated Busway is developed for electrical systems below 1kV. The product has features of safety and compact. It is designed to use the insulation material to perform cast resin sealing to the copper (aluminium) conductor. The insulation material is cast resin which contains non-organic volcanic rock with the features of excellent insulation characteristics, mechanical strengh, humidity-proof, non-combustible, and self-extinguishing .

3. Applicable Scope:

TECOBAR busway is manufactured in accordance with IEC 60439-1, IEC 60439-2, IEC 61439 and CNS 14286. The elements included as below:

3.1 Straight elements, elbow elements, geometrical shape elements, phase-switch elements, expansion elements, transfer elements, split elements and terminal elements.

3.2 Distribution unit: There are fixed type take-off unit and draw-out type plug-in unit.

＊ Note: The plug-in leads shall be reserved in advance. Therefore, the number of plug-in unit shall be confirmed while purchase.

4.Condition of Use:

TECOBAR busway is composed of the elements listed in item 3.1. The elements are connected through junction units on site before cast molding with insulation mix to complete the low voltage busway.

Conditions for TECOBAR:

4.1 Altitude: below 2000m, indoor and outdoor site.

4.2 Ambient temperature: -45°C~65°C

4.3 Ambient humidity: 0%~100%

5. Technical Specifications:

5.1 Rated Voltage V : AC1000V.

5.2 Rated Current A : 419A~8421A.

5.3 Frequency Hz : 50/60.

5.4 System : 3Φ3w, 3Φ4w, 3Φ3w+1/2G, 3Φ3W+G, 3Φ4W+1/2G, 3Φ4W+G.

5.5 Conductor Material : Copper (E-Cu57) and Aluminum.

Purity : 99.9% Conductivity : Above 98% IACS.

According to standards : JIS H3140 , DIN 1787, DIN 1759, DIN 40500.

5.6 Electrical characteristics of each TECOBAR element (less than 4m)

Insulation capabilities : ◎ AC voltage withstand phase to phase is AC 5kV/1min.

◎ Insulation resistance phase to phase is ≧ 2GΩ/DC 1kV.

Fireproof : ◎ In accordance with CNS 14286 at 840°C for 30 minutes.

◎ In accordance with IEC 60331-21 at 750°C for 3 hours.

◎ In accordance with BS 6387 950°C for 3 hours.

Protection degree : ◎ In accordance with IEC 60529 IP68.

Mechanical impacts : ◎ In accordance with IEC 62262 IK10.

Grounding : ◎ Internal grounding for TECOBAR busway system.



Copper

Type	Single Line								Double Lines		
Model	LA02EC	LA04EC	LA04EC	LA08EC	LA08EC	LA12EC	LA16EC	LA16EC	LA08DC	LA12DC	LA16DC
Conductor Section(mm^2)	80	160	240	320	400	600	800	960	960	1440	1920
Conductor Dimensions (mm)	w20xt4	w40xt4	w40xt6	w80xt4	w80xt5	w120xt5	w160xt5	w160xt6	2-w80xt6	2-w120xt6	2-w160xt6

Conductor Material	purity copper 99.9% , above 98% IACS										
Rated Current A (35/40 ℃)	419	713	874	1127	1263	1622	2008	2221	2624	3442	4202
Rated Voltage V	1000										
Frequency Hz	50/60										

Electrical Characteristics											
R at 20 ℃ μΩ / m	209.0	108.3	72.1	54.1	43.3	28.9	21.7	18.8	18.1	12.1	10.2
R at 90 ℃ μΩ / m	253.9	142.1	94.6	69.3	55.2	39.3	29.5	24.1	24.2	16.6	12.7
X μΩ / m f:60Hz	98.4	89.6	86.6	74.1	73.2	58.9	46.4	45.7	43.9	35.8	28.2
Icw kA / 1Sec	15	28	40	50	50	65	80	80	100	120	120
Ipeak	65	84	84	110	110	143	176	176	220	264	264
P_{loss} W / m	134	217	217	264	264	310	357	357	500	590	683
IP/IK	IP68/IK10										

※Technical specifications may change without any further notice.

Product Dimensions (mm)

Fig.1

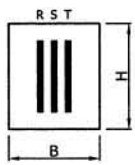

Fig.2

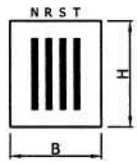

Fig.3

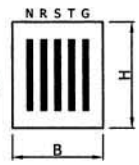

Fig.4

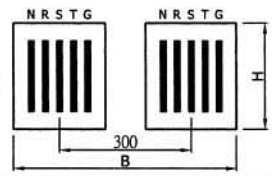

	Width (B) / Height (H)										
3Φ3W (Fig.1)	104/60	104/80	104/80	104/120	104/120	104/160	104/200	104/200	404/120	404/160	404/200
3Φ4W 3Φ3W+G (Fig.2)											
3Φ4W+G (Fig.3,Fig.4)											

	Weight kg / m										
Product Weight	13.8	20.3	23.3	33.5	35.7	50.2	64.4	71.5	78.6	111.0	143.0

※ Conductor : 3Φ3W represents R S T three phases, three wires
3Φ4W represents NRST three phases, four wires.
G represents grounding phase 100% of rated current.

※ Please refer to the temperature correction coefficient of rated current on page 1-29 while ambient temperature exceeds 40℃.



Copper

Type	Single Line				Double Lines			
Model	LB08EC	LB12EC	LB16EC	LB16EC	LB08DC	LB12DC	LB16DC	LB16DC
Conductor Section(mm^2)	800	1200	1600	1920	1600	2400	3200	3840
Conductor Dimensions (mm)	2-w80xt5	2-w120xt5	2-w160xt5	2-w160xt6	4-w80xt5	4-w120xt5	4-w160xt5	4-w160xt6

Conductor Material	purity copper 99.9% , above 98% IACS							
Rated Current A (35/40 ℃)	2096	2724	3291	3443	4012	5222	6309	6569
Rated Voltage V	1000							
Frequency Hz	50/60							

Electrical Characteristics								
R at 20 ℃ μΩ / m	21.7	14.4	10.8	9.0	10.9	7.2	5.4	4.8
R at 90 ℃ μΩ / m	27.0	18.2	14.0	12.8	14.1	9.4	8.4	7.7
X μΩ / m f:60Hz	33.5	27.2	21.2	20.8	25.9	21.0	16.4	16.1
Icw kA / 1Sec	80	100	100	100	120	120	120	120
Ipeak	176	220	220	220	264	264	264	264
P_{loss} W / m	356	405	455	455	681	769	997	997
IP/IK	IP68/IK10							

※Technical specifications may change without any further notice.

Product Dimensions (mm)

Fig.1

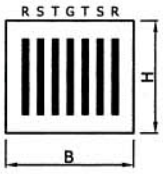

Fig.2

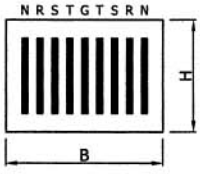

Fig.3

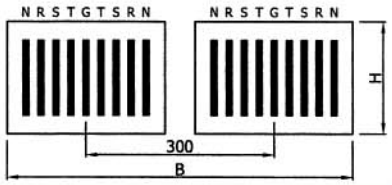

	Width (B) / Height (H)							
3Φ3W+1/2G (Fig.1)								
3Φ4W+1/2G (Fig.2,Fig.3)	168/120	168/160	168/200	168/200	468/120	468/160	468/200	468/200

	Weight kg / m							
Product Weight	55.1	86.5	111.5	122.0	110.2	173.0	223.0	244.0

※ Conductor : 3Φ3W represents R S T three phases, three wires.
3Φ4W represents NRST three phases, four wires.
1/2G represents grounding phase 50% of rated current.

※ Please refer to the temperature correction coefficient of rated current on page 1-29 while ambient temperature exceeds 40℃.



Aluminum

Type	Single Line						Double Lines		
Model	LA04EA	LA04EA	LA08EA	LA08EA	LA12EA	LA16EA	LA08DA	LA12DA	LA16DA
Conductor Section(mm^2)	160	240	320	480	600	960	960	1440	1920
Conductor Dimensions (mm)	w40xt4	w40xt6	w80xt4	w80xt6	w120xt5	w160xt6	2-w80xt6	2-w120xt6	2-w160xt6

Conductor Material	AL:1070								
Rated Current A (35/40 ℃)	560	686	870	1066	1290	1749	2021	2724	3349
Rated Voltage V	1000								
Frequency Hz	50/60								

Electrical Characteristics									
R at 20 ℃ μΩ / m	176.9	117.9	88.4	58.9	47.2	29.5	29.5	19.7	14.7
R at 90 ℃ μΩ / m	230.9	153.8	116.4	77.5	62.1	38.9	40.8	26.5	20.3
X μΩ / m f:60Hz	89.6	86.5	74.1	72.4	58.9	45.7	43.9	35.8	28.2
Icw kA / 1Sec	15	25	30	50	65	80	100	120	120
Ipeak	84	84	110	110	143	176	220	264	264
P_{loss} W / m	217	217	264	264	310	357	500	590	683
IP/IK	IP68/IK10								

※Technical specifications may change without any further notice.

Product Dimensions (mm)

Fig.1

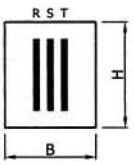

Fig.2

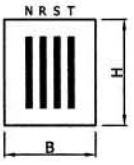

Fig.3

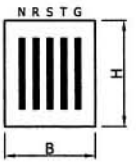

Fig.4

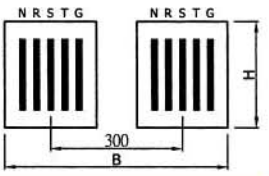

Width (B) / Height (H)								
3Φ3W (Fig.1)	104/80	104/120	104/160	104/200	404/120	404/160	404/200	
3Φ4W (Fig.2)								
3Φ3W+G (Fig.2)								
3Φ4W+G (Fig.3,Fig.4)								

Weight kg / m									
Product Weight	15.3	15.8	23.3	24.4	31.1	41.3	48.8	65.4	82.6

※ Conductor : 3Φ3W represents R S T three phases, three wires.
3Φ4W represents NRST three phases, four wires.
G represents grounding phase 100% of rated current.

※ Please refer to the temperature correction coefficient of rated current on page 1-29 while ambient temperature exceeds 40℃.



Aluminum

Type	Single Line		Double Lines		
Model	LB12EA	LB16EA	LB08DA	LB12DA	LB16DA
Conductor Section(mm^2)	1200	1600	1920	2400	3840
Conductor Dimensions (mm)	2-w120xt5	2-w160xt5	4-w80xt6	4-w120xt5	4-w160xt6
Conductor Material	AL:1070				
Rated Current A (35/40 ℃)	2094	2574	3395	4015	5375
Rated Voltage V	1000				
Frequency Hz	50/60				
Electrical Characteristics					
R at 20 ℃ μΩ / m	23.5	17.7	14.7	11.8	7.4
R at 90 ℃ μΩ / m	30.8	22.9	19.7	15.9	11.5
X μΩ / m f:60Hz	27.2	21.2	25.5	21.0	16.1
Icw kA / 1Sec	100	100	120	120	120
Ipeak	220	220	264	264	264
P_{loss} W / m	405	455	681	769	997
IP/IK	IP68/IK10				

※Technical specifications may change without any further notice.

Product Dimensions (mm)

Fig.1

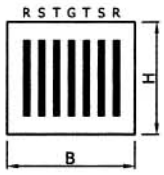

Fig.2

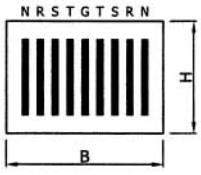

Fig.3

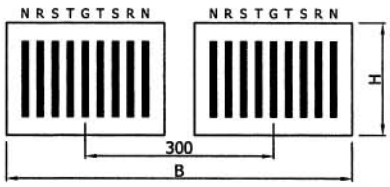

Width (B) / Height (H)					
3Φ3W+1/2G(Fig.1)	168/160	168/200	468/120	468/160	468/200
3Φ4W+1/2G (Fig.2 Fig.3)					

Weight kg / m					
Product Weight	53.5	63.6	79.0	101.1	135.0

※ Conductor : 3Φ3W represents R S T three phases, three wires.
3Φ4W represents NRST three phases, four wires.
1/2G represents grounding phases 50% of rated current.

※ Please refer to the temperature correction coefficient of rated current on page 1-29 while ambient temperature exceeds 40℃.



Copper

Type	Single Line					Double Lines				
Model	NLV16	NLV16	NLV20	NLV20	NLV24	NLV16-D	NLV20-D	NLV24-D	NLV24-D	NLV24-D
Conductor Section(mm^2)	640	800	1000	1200	1440	1600	2000	2400	2880	3120
Conductor Dimensions (mm)	w160xt4	w160xt5	w200xt5	w200xt6	w240xt6	2-w160xt5	2-w200xt5	2-w240xt5	2-w240xt6	2-w240xt6.5

Conductor Material	purity copper 99.9% , above 98% IACS									
Rated Current A (35/40 ℃)	2454	2732	3357	3665	4225	5309	6350	7422	8122	8421
Rated Voltage V	1000									
Frequency Hz	50/60									

Electrical Characteristics										
R at 20 ℃ μΩ / m	27.2	21.7	17.3	14.4	12.0	10.8	8.7	7.2	6.0	5.5
R at 90 ℃ μΩ / m	36.8	29.7	23.6	19.8	16.9	15.4	12.4	10.3	8.6	8.0
X μΩ / m f:60Hz	82.3	81.8	57.8	57.4	30.3	43.1	30.9	16.1	15.9	15.6
Icw kA / 1Sec	100	100	120	120	120	120	120	120	120	120
Ipeak	220	220	264	264	264	264	264	264	264	264
P_{loss} W / m	665	665	798	798	905	1302	1500	1702	1702	1702
IP/IK	IP68/IK10									

※Technical specifications may change without any further notice.

Product Dimensions (mm)

Fig.1

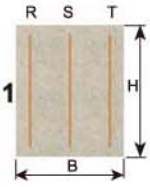

Fig.2

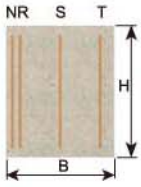

Fig.3

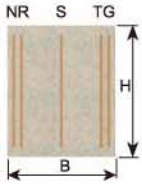

Fig.4

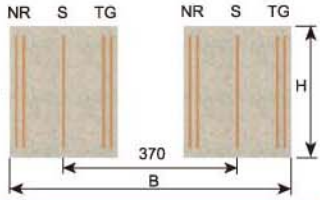

	Width (B) / Height (H)					
3Φ3W(Fig.1)	230/200	230/240	230/280	600/200	600/240	600/280
3Φ4W (Fig.2)						
3Φ4W+G(Fig.3 Fig.4)						

	Weight kg / m									
Product Weight	74.3	91.8	111.6	120.8	162.1	183.6	223.8	302.9	324.2	334.9

※The heat dissipation openings of this series of TECOBAR are unique design patent.
This series have granted the patent certificate by Taiwan and China.

※ Conductor : 3Φ3W represents R S T three phase, three wires.
3Φ4W represents NRST three phases, four wires.
G represents grounding phase 100% of rated current.

※ Please refer to the temperature correction coefficient of rated current on page 1-29 while ambient temperature exceeds 40℃.



Product Specifications NLV

Type	Single Line				Double Lines		
Model	NLV16A	NLV16A	NLV20A	NLV24A	NLV16-DA	NLV20-DA	NLV24-DA
Conductor Section(mm^2)	640	800	1000	1440	1600	2400	2880
Conductor Dimensions (mm)	w160xt4	w160xt5	w200xt5	w240xt6	2-w160xt5	2-w200xt6	2-w240xt6
Conductor Material	AL:1070						
Rated Current A (35/40 ℃)	1847	2065	2515	3205	4003	5245	6090
Rated Voltage V	1000V						
Frequency Hz	50/60						
Electrical Characteristics							
R at 20 ℃ μΩ / m	44.2	35.4	28.3	19.7	17.7	11.8	9.8
R at 90 ℃ μΩ / m	58.6	46.9	37.9	26.5	25.1	16.4	13.8
X μΩ / m f:60Hz	82.3	81.8	57.8	30.3	43.1	30.2	15.9
Icw kA / 1Sec	65	80	120	120	120	120	120
Ipeak	220	220	264	264	264	264	264
P_{loss} W / m	600	600	720	817	1175	1354	1536
IP/IK	IP68/IK10						

※Technical specifications may change without any further notice.

Product Dimensions (mm)

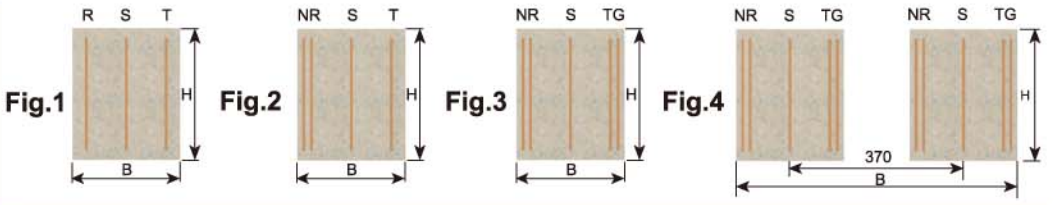

Width (B) / Height (H)						
3Φ3W (Fig.1)	230/200	230/240	230/280	600/200	600/240	600/280
3Φ4W (Fig.2)						
3Φ4W+G(Fig.3 Fig.4)						

Weight kg / m							
Product Weight	54.5	67.1	80.7	117.6	134.2	167.4	235.2

※The heat dissipation openings of this series of TECOBAR are unique design patent.
This series have granted the patent certificate by Taiwan and China.

※ Conductor : 3Φ3W represents R S T three phases, three wires.
3Φ4W represents NRST three phases, four wires.
G represents grounding phases 100% of rated current.

※ Please refer to the temperature correction coefficient of rated current on page 1-29 while ambient temperature exceeds 40℃.



Selection of Standard Parts

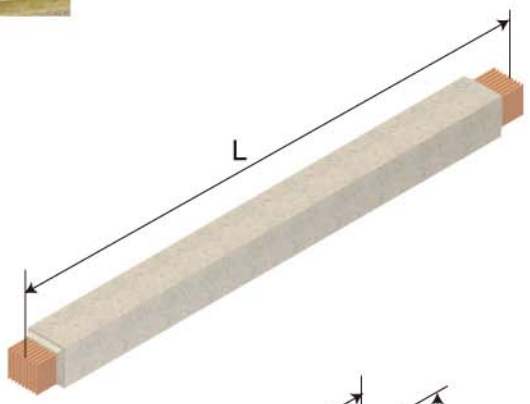

Straight Element

Model	Length
RE	L=1000mm、2000mm 3000mm、4000mm

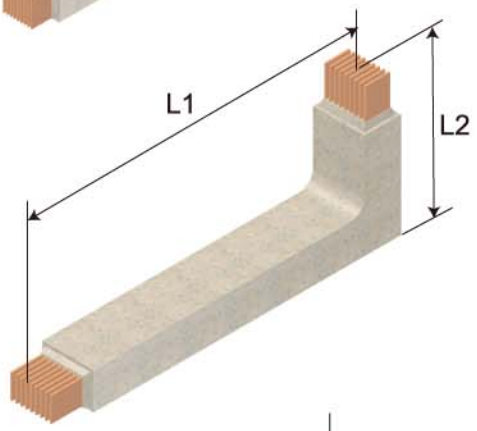

Brazed Elbow Element

Model	Length
HL1	L1+L2=1000mm
HL2	L1+L2=2000mm
HL1	L1=650mm L2=350mm

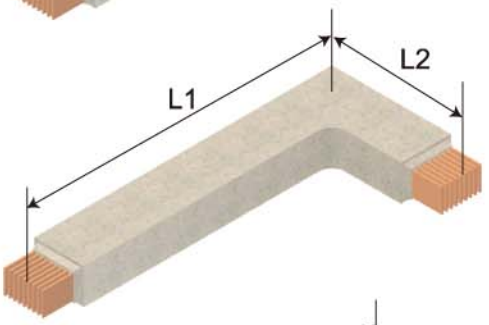

Bent Elbow Element

Model	Length
HB1	L1+L2=1000mm
HB2	L1+L2=2000mm
HB1	L1=650mm L2=350mm

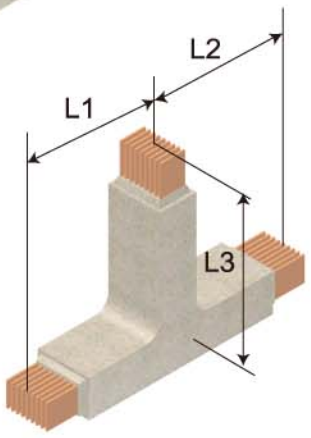

Brazed T- Element

Model	Length
TL2	L1=L2=L3=350mm

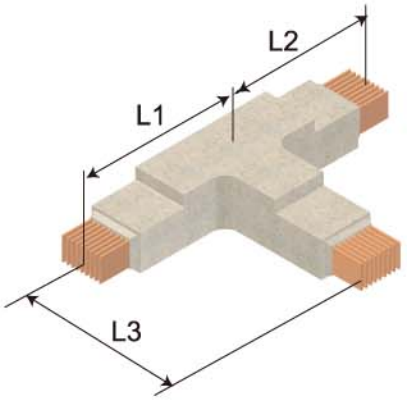

Bent T- Element

Model	Length
TB2	L1=L2=L3=500mm



Selection of Standard Parts

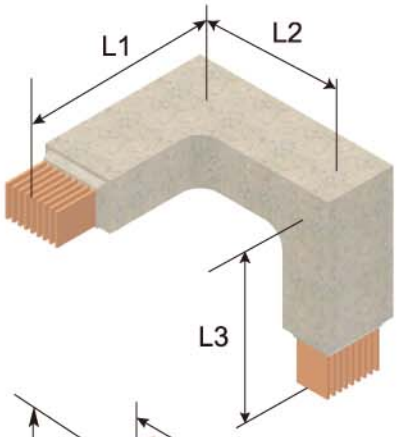

Double Elbow Element Right

Model	Length
XR1	L1+L2+L3=1000mm
XR2	L1+L2+L3=2000mm
	L1=L3=350mm
	L2≧701mm， HB+HL applied

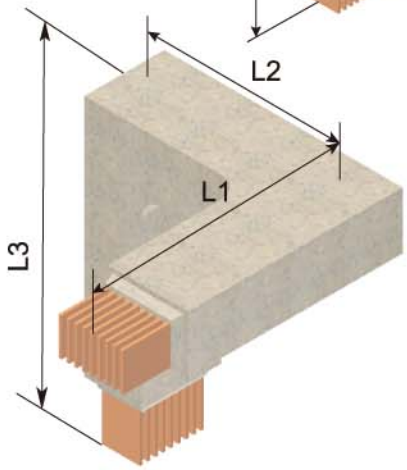

Double Elbow Element Left

Model	Length
XL1	L1+L2+L3=1000mm
XL2	L1+L2+L3=2000mm
	L1=L3=350mm
	L2≧701mm， HB+HL applied

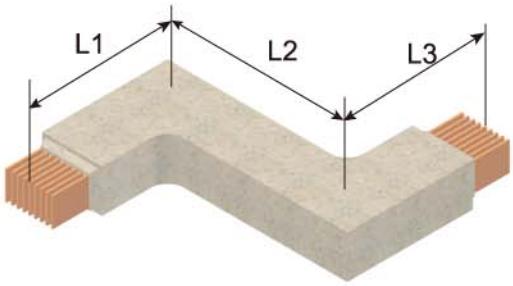

Bent Z- Element

Model	Length
ZB1	L1+L2+L3=1000mm
ZB2	L1+L2+L3=2000mm
	L1=L3=350mm

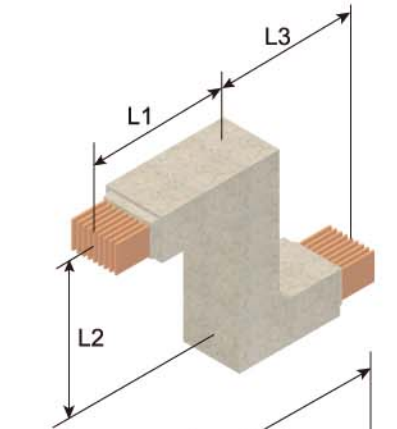

Brazed Z- Element

Model	Length
ZL1	L1+L2+L3=1000mm
ZL2	L1+L2+L3=2000mm
	L1=L3=350mm

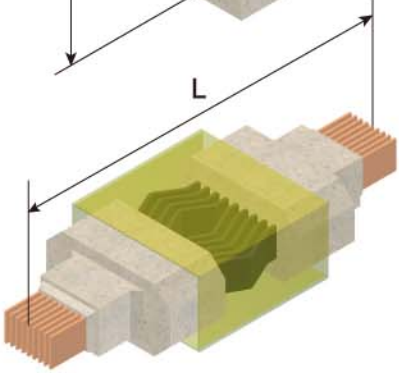

Expansion Element

Model	Length
EX	L=1000mm (fixed size)



Selection of Standard Parts

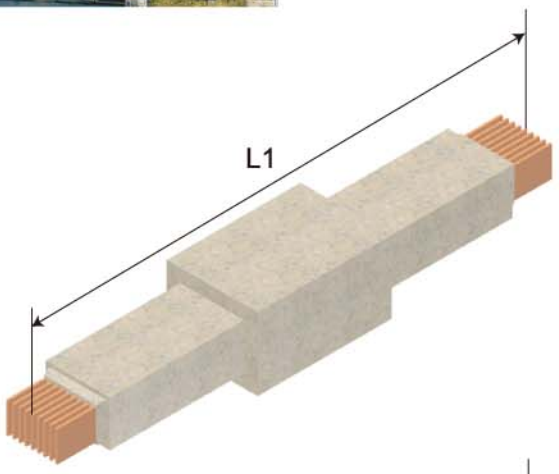

Phase Switch Element

Model	Length
PC1	L1=1200mm

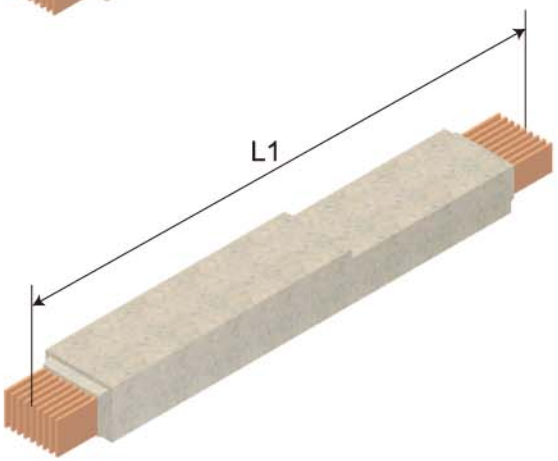

Transfer Element

Model	Length
TF1	L1=1200mm

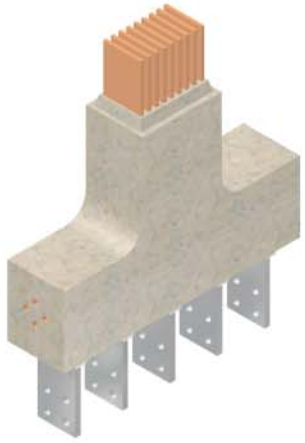

AG Type Terminal Element

Model	Length
AG1	Refer to 1-22

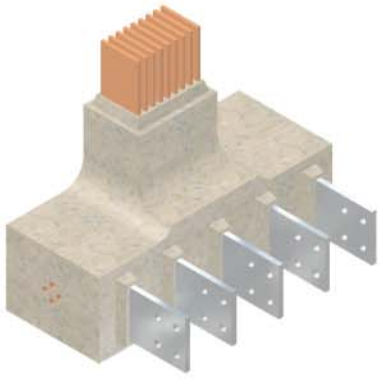

AO Type Terminal Element

Model	Length
AO1	Refer to 1-23



Unit:mm

Type	External Size	Limit of Hanger Installation Pitch A		Minimum pitch between busway	
	B×H	Horizontal Installation	Vertical Installation	Layout of Busway arrangement 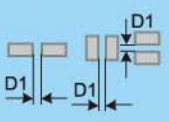	Distance between opening and busway 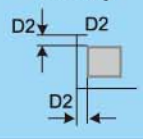
LA02	104×60	2000	4000	140	60
LA04	104×80				
LA08	104×120				
LA12	104×160				
LA16	104×200				
LB04	168×80				
LB08	168×120				
LB12	168×160				
LB16	168×200				
NLV16	230×200				
NLV20	230×240				
NLV24	230×280				

Note:Distance between hangers and busway are allowed to be adjusted on site while required.

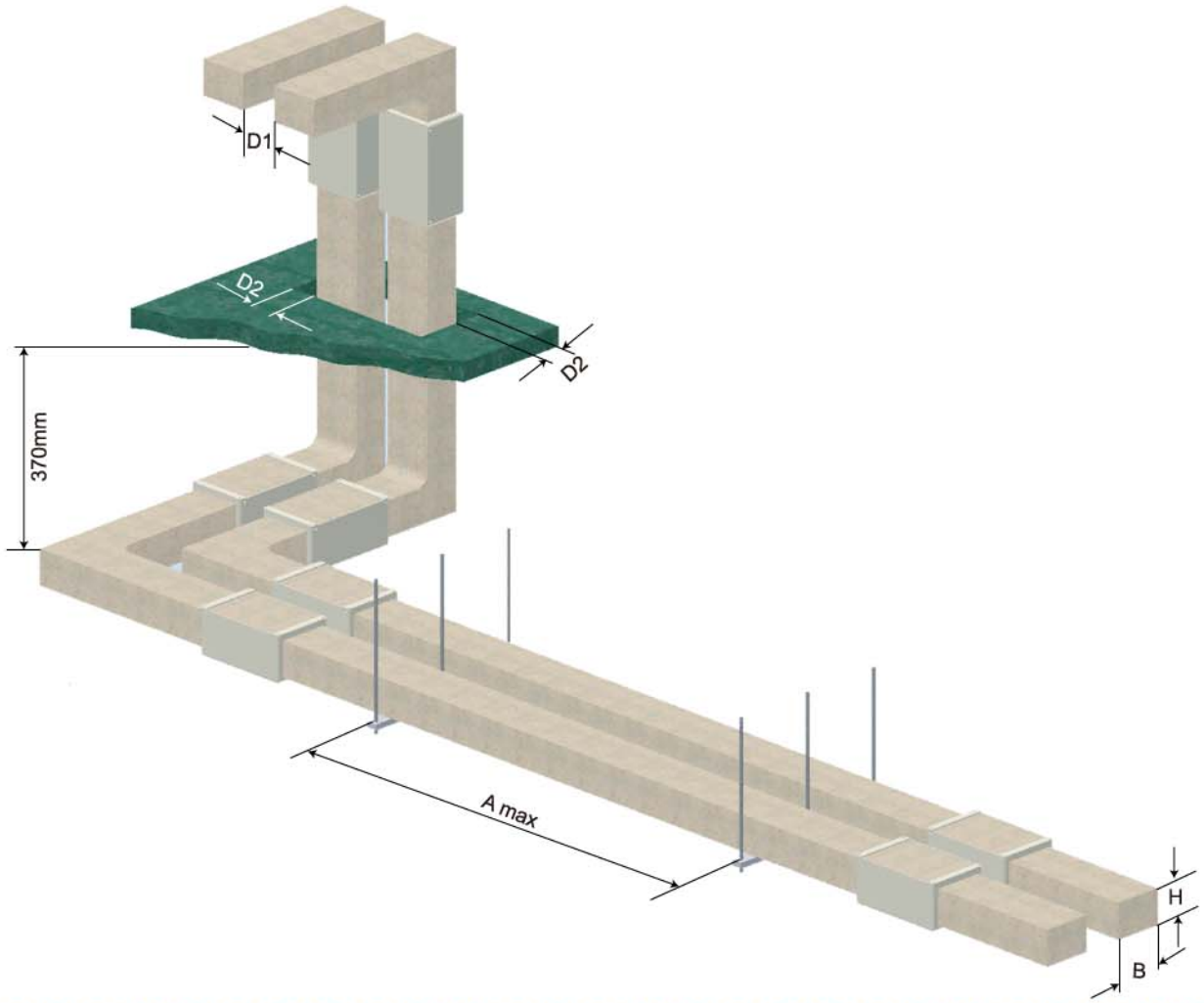



Assembly Diagrams of Low Voltage Busway Junction



► Distance between two elements are within 20mm (inclusive). The distance can be flexibly adjusted on site by the requirement of construction.



► Illustration of JUNCTION assembly.



► The assembly bolt of Junction must be secured by torque wrench.

Method of cast-resin work on-site.

Refer to installation guide for casting method on site

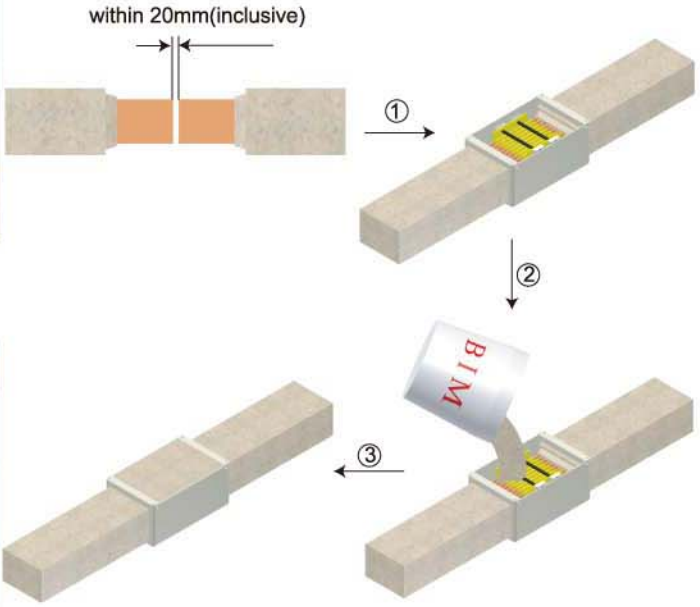

Torque of bolt during work:

Specs	M10	M12
Torque value (N-m) for Cu	43	74
Torque value (N-m) for Al	30	60

Illustration of cast-resin after completion.





Low Voltage Busway Horizontal Hanger Standard

Unit:mm

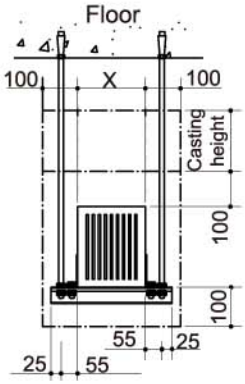

Cross-sectional Diagram of Single-Busway

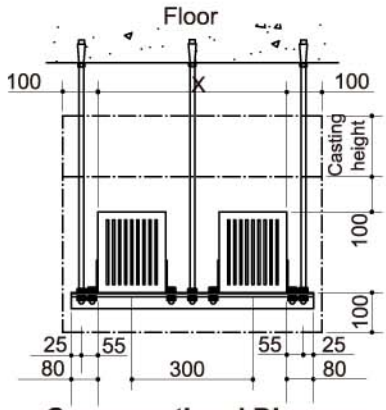

Cross-sectional Diagram of Dual-BusBusway

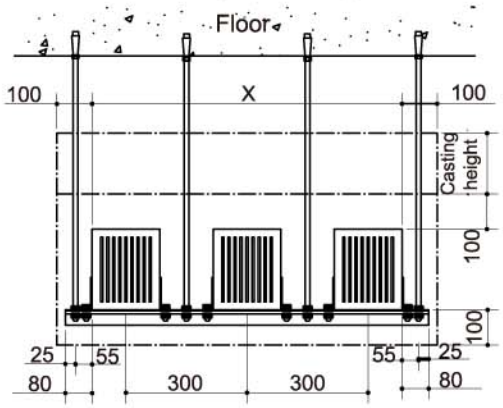

Cross-sectional Diagram of Triple-Busway

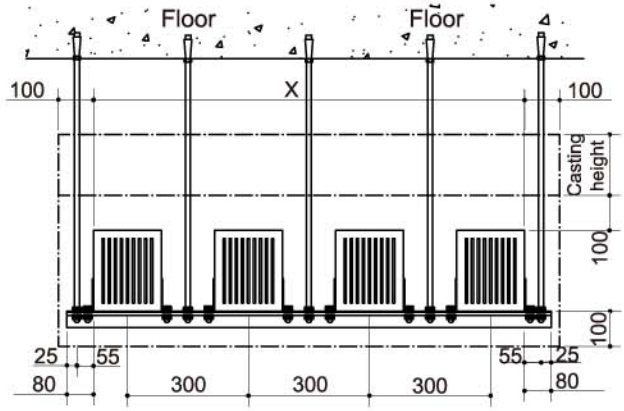

Cross-sectional Diagram of Quadruple-Busway

Side view

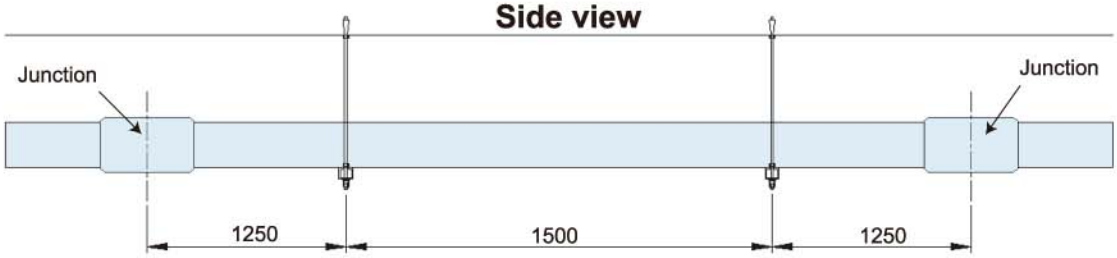

1. The installation pitch between each hanger has to comply with the standard as above. If the work condition can not meet the standard, it may be adjusted according to the condition on site. However, it must meet the requirement described in page 18 of the installation guide: minimum pitch requirement of the busway.
2. The space required for installing busway is shown in the diagram. The safety space above the busway should have 100mm + casting height of 270mm = 370 mm for clearance standard of installation space. In addition, the height of the floor should be within 5m above the ground to allow expansion of bolts, full-thread bolts, and channel, etc. to install at the bottom of the floor.
3. The installation distance of the hanger and corner iron should be in accordance with "x" dimension of busway and dimension listed in the diagram.
4. One set of L-shape stopping plate part.

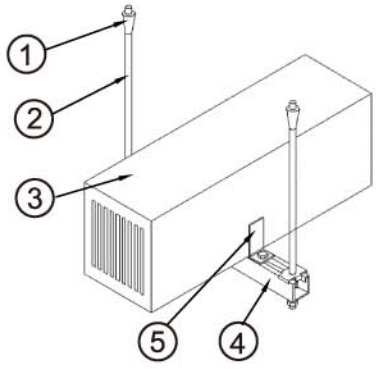

No.	Name of Part	Specs	Remark
①	Inner thread inflated screws	1/2"*2"	Zinc-plated item. (Included in installation work)
②	Full thread bolts	1/2"	Zinc-plated item. (Included in installation work)
③	Busway		TECOBAR
④	Channel	2t*41*41mm	Zinc-plated item. (Included in installation work)
⑤	L-shape stopping plate	2.3t*80*40	Zinc-plated item.



Vertical Hanger Units			
No.	Name of Part	Specs	Remark
①	Spring Box	-	Zinc-plated item.
②	Upper bolts	M12withN，W，SW	Zinc-plated item.
③	Under bolts	M12withN，W，SW	Zinc-plated item.
④	Channel	100x50x5t	Zinc-plated item. (Included in installation work)
⑤	Inflated Screws	1/2"	Zinc-plated item. (Included in installation work)

※The selection of spring box is according to different busway type.

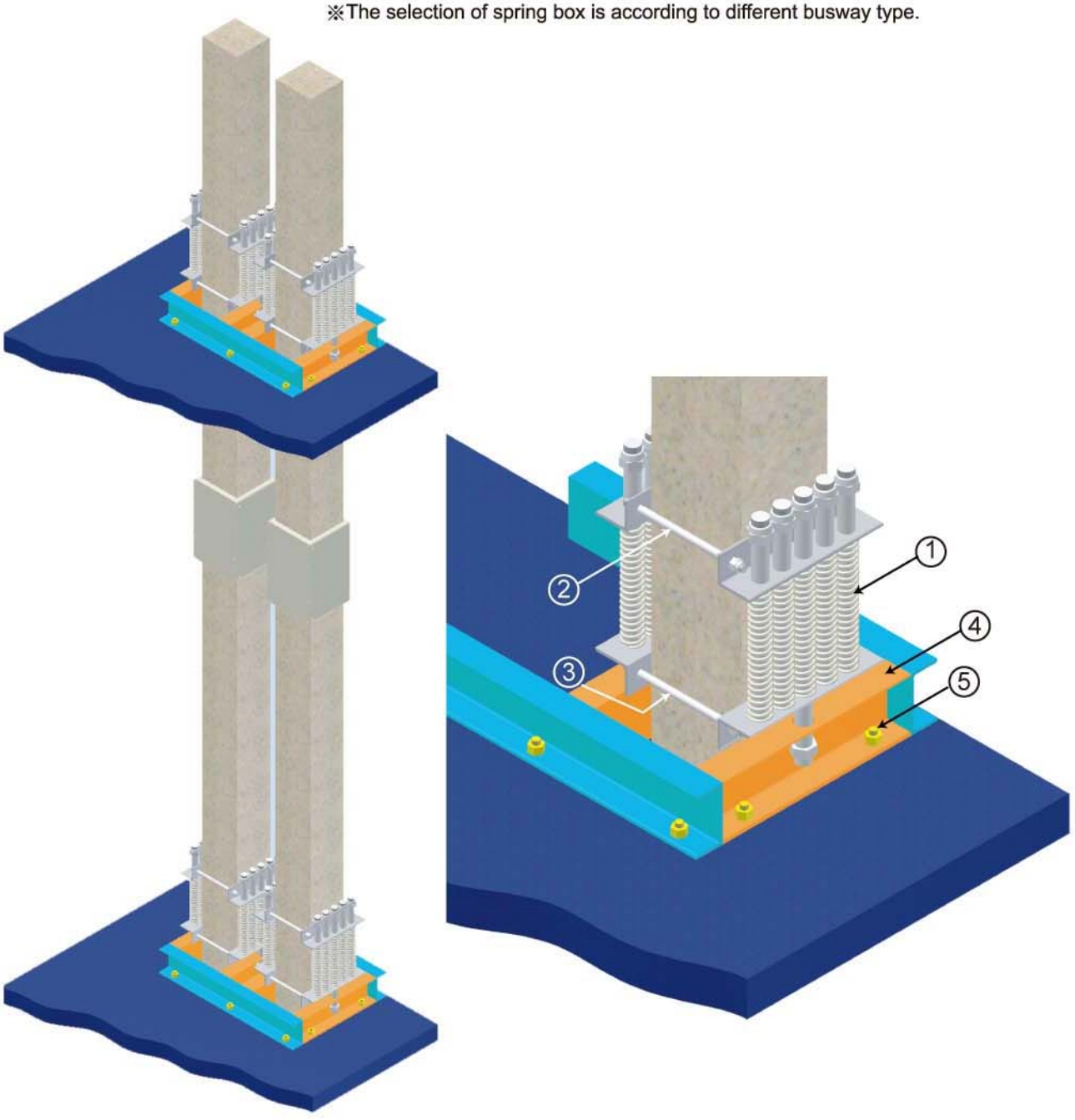



AG Type Terminal Elements

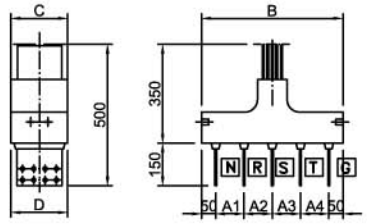

Figure 1

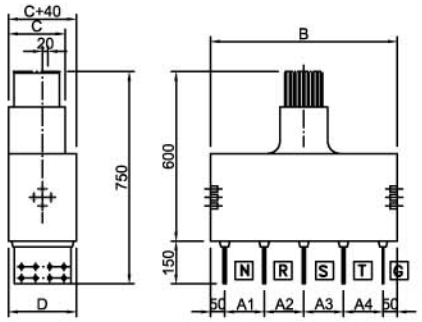

Figure 2

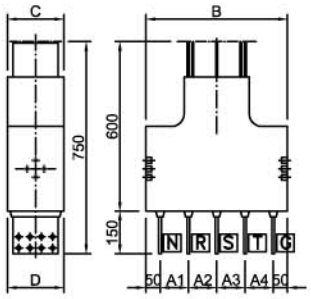

Figure 3

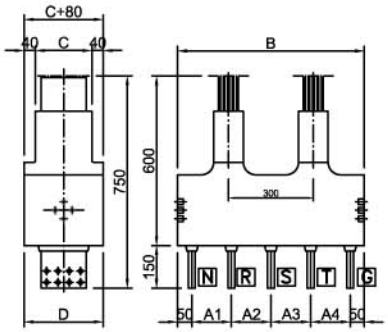

Figure 4

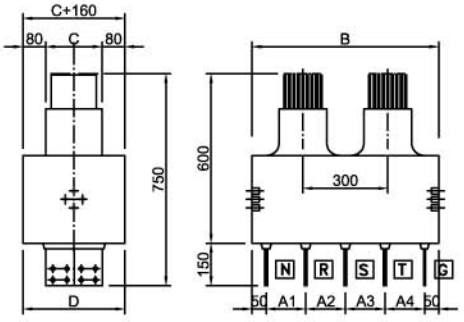

Figure 5

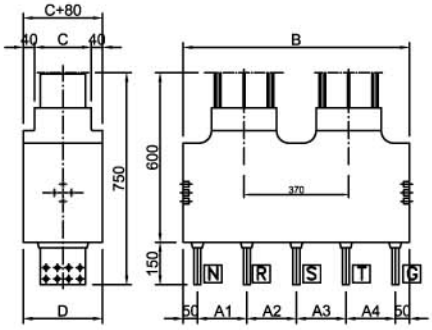

Figure 6

Unit:mm

Figure No.	Type	3Φ4W+G or 3Φ4W+1/2G(NRSTG)							3Φ4W(NRST) or 3Φ3W+1/2G(RSTG)					
		A1	A2	A3	A4	B	C	D	A1	A2	A3	B	C	D
Figure 1	LA02EC	100	100	100	100	500	60	60	100	100	100	400	60	60
	LA04EC	100	100	100	100	500	80	80	100	100	100	400	80	80
	LA08EC	100	100	100	100	500	120	120	100	100	100	400	120	120
	LA12EC	100	100	100	100	500	160	160	100	100	100	400	160	160
	LA16EC	100	100	100	100	500	200	200	100	100	100	400	200	200
Figure 2	LB08EC	140	140	140	140	660	120	160	140	140	140	520	120	160
	LB12EC	140	140	140	140	660	160	200	140	140	140	520	160	200
	LB16EC	140	140	140	140	660	200	240	140	140	140	520	200	240
Figure 3	NLV16	100	100	100	100	500	200	200	100	100	100	400	200	200
	NLV20	100	100	100	100	500	240	240	100	100	100	400	240	240
	NLV24	100	100	100	100	500	280	280	100	100	100	400	280	280
Figure 4	LA08DC	140	140	140	140	660	120	200	140	140	140	520	120	200
	LA12DC	140	140	140	140	660	160	240	140	140	140	520	160	240
	LA16DC	140	140	140	140	660	200	280	140	140	140	520	200	280
Figure 5	LB08DC	140	140	140	140	660	120	280	140	140	140	560	120	280
	LB12DC	140	140	140	140	660	160	320	140	140	140	560	160	320
	LB16DC	180	180	180	180	820	200	360	180	180	180	640	200	360
Figure 6	NLV16-D	175	175	175	175	800	200	280	175	175	175	625	200	280
	NLV20-D	175	175	175	175	800	240	320	175	175	175	625	240	320
	NLV24-D	175	175	175	175	800	280	360	175	175	175	625	280	360



AO Type Terminal Elements

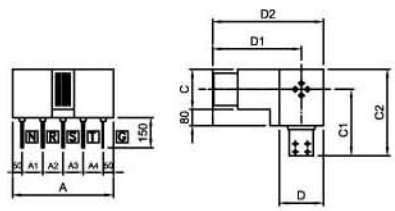

Figure 1

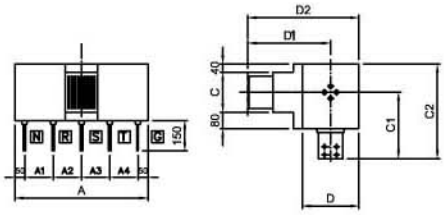

Figure 2

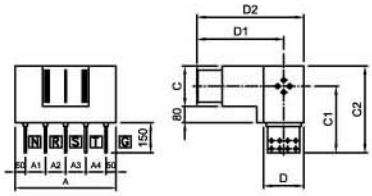

Figure 3

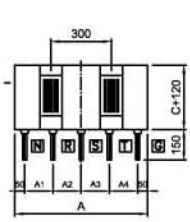

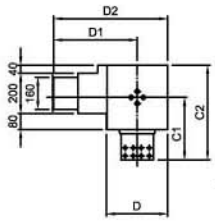

Figure 4

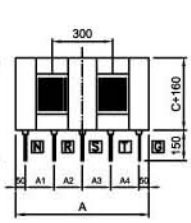

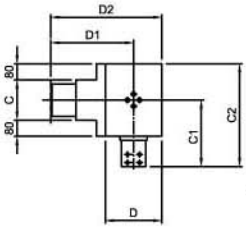

Figure 5

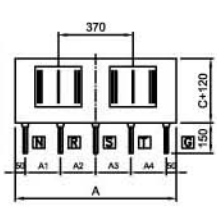

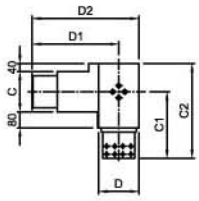

Figure 6

Unit:mm

Figure No.	Type	3Φ4W+G or 3Φ4W+1/2G(NRSTG)											3Φ4W(NRST) or 3Φ3W+1/2G(RSTG)									
		A	A1	A2	A3	A4	C	C1	C2	D	D1	D2	A	A1	A2	A3	C	C1	C2	D	D1	D2
Figure 1	LA02EC	500	100	100	100	100	60	260	290	60	380	410	400	100	100	100	60	260	290	60	380	410
	LA04EC	500	100	100	100	100	80	270	310	80	370	410	400	100	100	100	80	270	310	80	370	410
	LA08EC	500	100	100	100	100	120	290	350	120	390	450	400	100	100	100	120	290	350	120	390	450
	LA12EC	500	100	100	100	100	160	310	390	160	410	490	400	100	100	100	160	310	390	160	410	490
	LA16EC	500	100	100	100	100	200	330	430	200	430	530	400	100	100	100	200	330	430	200	430	530
Figure 2	LB08EC	660	140	140	140	140	120	290	390	220	420	530	520	140	140	140	120	290	390	220	420	530
	LB12EC	660	140	140	140	140	160	310	430	260	440	570	520	140	140	140	160	310	430	260	440	570
	LB16EC	660	140	140	140	140	200	330	470	300	460	610	520	140	140	140	200	330	470	300	460	610
Figure 3	NLV16	500	100	100	100	100	200	330	430	200	430	530	400	100	100	100	200	330	430	200	430	530
	NLV20	500	100	100	100	100	240	350	470	240	470	590	400	100	100	100	240	350	470	240	470	590
	NLV24	500	100	100	100	100	280	370	510	280	510	650	400	100	100	100	280	370	510	280	510	650
Figure 4	LA08DC	660	140	140	140	140	120	290	390	220	380	490	520	140	140	140	120	290	390	220	380	490
	LA12DC	660	140	140	140	140	160	310	430	260	400	530	520	140	140	140	160	310	430	260	400	530
	LA16DC	660	140	140	140	140	200	330	470	330	420	570	520	140	140	140	200	330	470	330	420	570
Figure 5	LB08DC	660	140	140	140	140	120	290	430	310	515	670	560	140	140	140	120	290	430	310	515	670
	LB12DC	660	140	140	140	140	160	310	470	350	535	710	560	140	140	140	160	310	470	350	535	710
	LB16DC	820	180	180	180	180	200	330	510	390	605	750	640	180	180	180	200	330	510	390	605	750
Figure 6	NLV16-D	800	175	175	175	175	200	330	430	200	430	530	625	175	175	175	200	330	430	200	430	530
	NLV20-D	800	175	175	175	175	240	350	470	240	470	590	625	175	175	175	240	350	470	240	470	590
	NLV24-D	800	175	175	175	175	280	370	510	280	510	650	625	175	175	175	280	370	510	280	510	650



Dimensions of Standard Terminal Elements Copper Plate for Low Voltage Busway

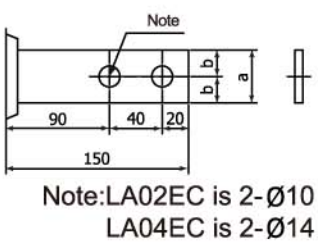

Note:LA02EC is 2-Ø10
LA04EC is 2-Ø14

Figure 1

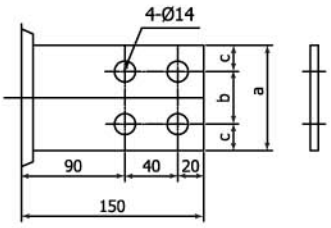

Figure 2

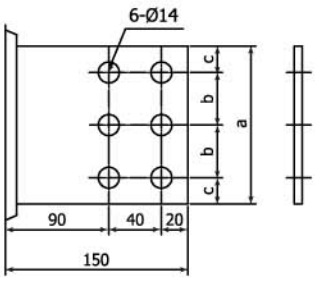

Figure 3

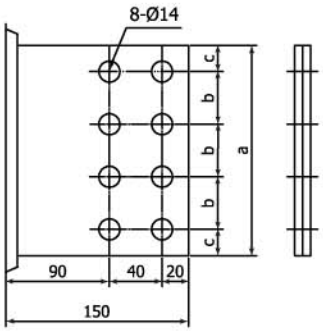

Figure 4

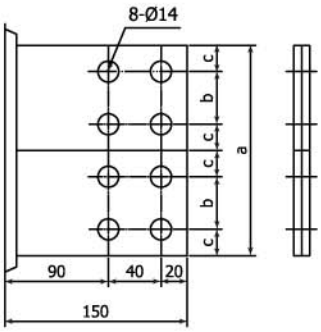

Figure 5

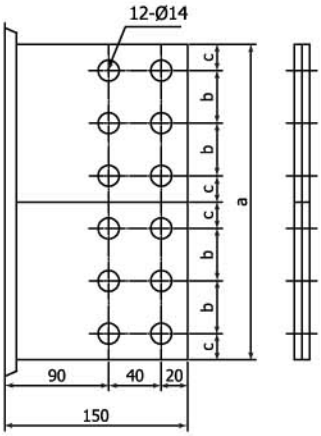

Figure 6

Figure	Type	Type of Terminal Elements	Dimensions(unit:mm)		
			a	b	c
Figure 1	LA02EC	AG/AO	20	10	-
	LA04EC	AG/AO	40	20	-
Figure 2	LA08EC	AG/AO	80	40	20
Figure 3	LA12EC	AG/AO	120	40	20
	LB12EC	AG/AO	120	40	20
Figure 4	LA16EC	AG/AO	160	40	20
	NLV16	AG/AO	160	40	20
Figure 5	LB16EC	AG/AO	160	40	20
	LB08DC	AG/AO	160	40	20
	NLV16-D	AG/AO	160	40	20
	LB12DC	AG/AO	200	40	30
	NLV20	AG/AO	200	40	30
	NLV20-D	AG/AO	200	40	30
Figure 6	LB16DC	AG/AO	240	40	20
	NLV24	AG/AO	240	40	20
	NLV24-D	AG/AO	240	40	20



Opening Requirement of Standard Terminal Elements and Switchgear for Low Voltage Busway

Opening Dimensions of Switchgear Top, Bottom, and Rear Side

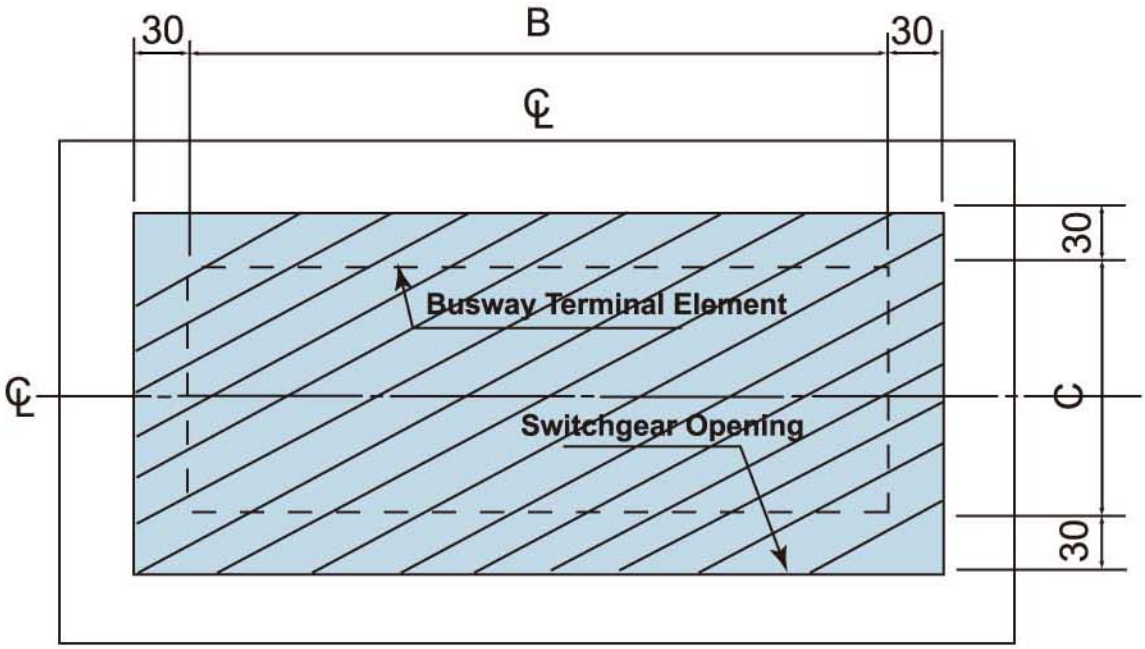

Busway Terminial Elements Opening Dimensions

Unit: mm

Type	AG Type Terminial Elements		AO Type Terminial Elements	
	C	B	C	B
LA02EC	60	500	60	500
LA04EC	80	500	80	500
LA08EC	120	500	120	500
LA12EC	160	500	160	500
LA16EC	200	500	200	500
LA08DC	200	660	200	660
LA12DC	240	660	260	660
LA16DC	280	660	300	660
LB08EC	160	660	220	660
LB12EC	200	660	260	660
LB16EC	240	660	300	660
LB08DC	280	660	310	660
LB12DC	320	660	350	660
LB16DC	360	820	390	820
NLV16	200	500	200	500
NLV20	240	500	240	500
NLV24	280	500	280	500
NLV16-D	200	800	200	800
NLV20-D	240	800	240	800
NLV24-D	280	800	280	800



Low Voltage Busway Terminal Element and Switchgear Standard Guidline

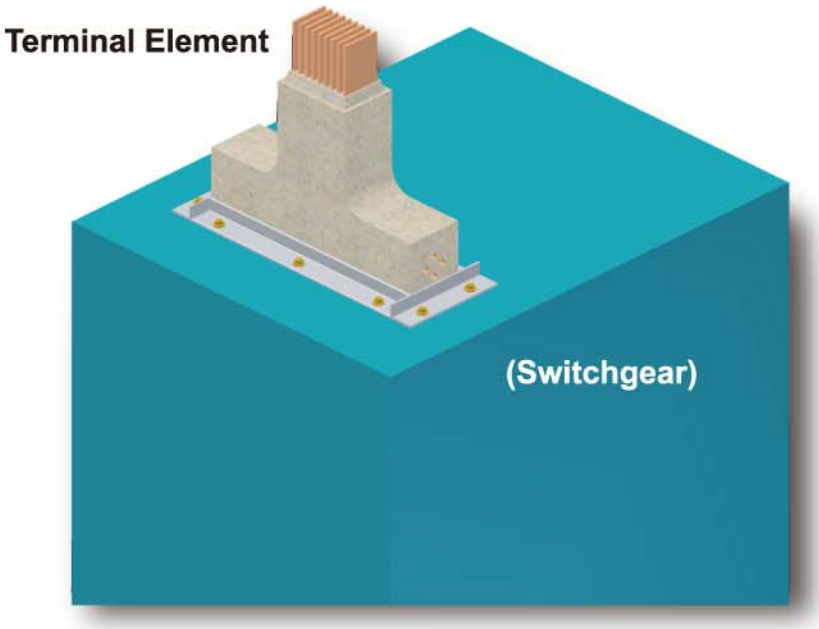

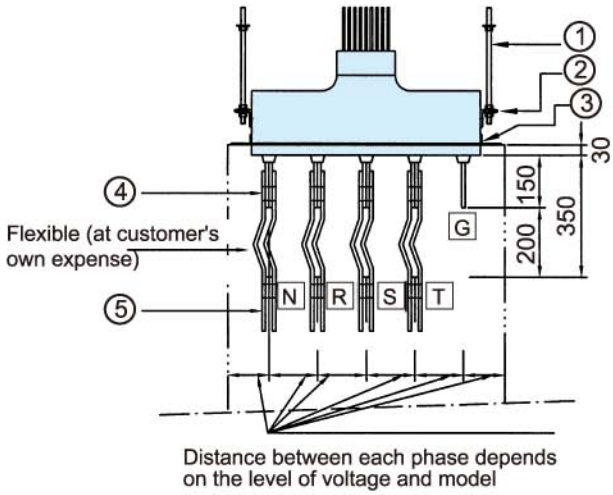

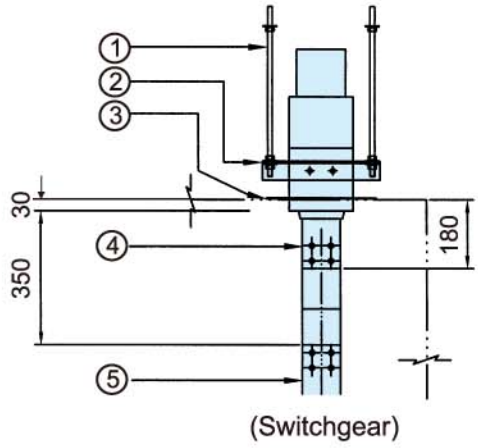

No.	Name	Specs	Remark
1	Full threaded screw	1/2"	Zinc-plated product (Included in installation work)
2	Angle Steel	6t×50×50mm	Zinc-plated product (Included in installation work)
3	Terminal element seal	Steel plate t= 2mm	Painted
4	Flexibles	The 200mm reserved space between terminal element and switchgear are connected by flexibles.	Materials of this portion and connection work does not belong to the busway contractor.
5	Connection copper plate of switchgear	According to Switchgear design.	The drillings on copper plate are designed, processed and connected by switchger cortractor.

Note: This diagram is the standard connection interface.
Actual location of connection is determined case by case.



Low Voltage Busway Terminal Element and Generator Connection Standard Guidline

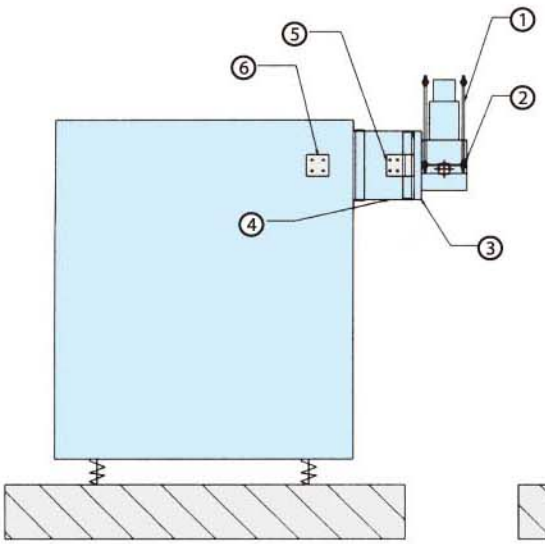

Transformer

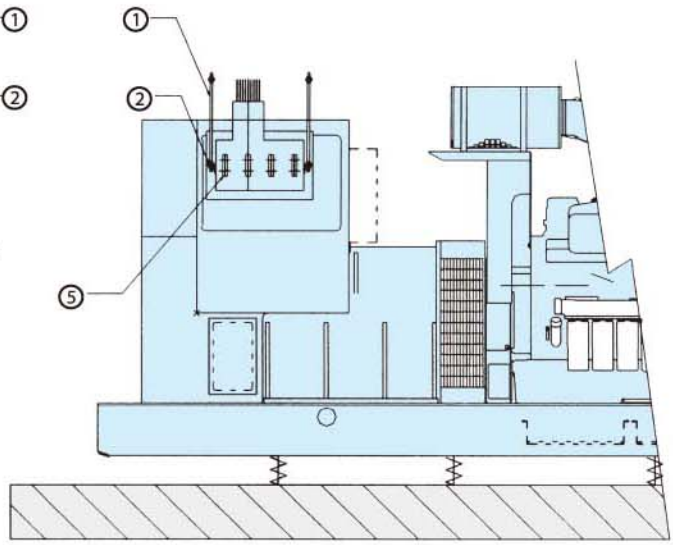

Generator

No.	Name	Specs	Remark
1	Full threaded screw	1/2"	Zinc-plated product (Included in installation work)
2	Angle Steel	6t×50×50mm	Zinc-plated product (Included in installation work)
3	Terminal element seal	Steel plate t=2mm	Painted
4	Fireproof cambric	A01	Non-Combusion (Included in installation of flange)
5	Flexibles	The reserved space between terminal element and generator are connected by flexibles.	Materials of this portion and connection work does not belong to the busway contractor.
6	Connection copper plate of generator/ transformer	According to Switchgear design.	The drillings on copper plate are designed, processed and connected by switchgear contrator.



Plug-in Unit

A. The standard length of each section of plug-in unit type busway is 3m and 4m. The plug-in points should be compared with the quantity and position of MCCB from customer's system drawing. Extra points need to be reserved by customer's actual requirement and the price is determined separately.

B. When the plug-in unit is taken off, the opening of the leads is sealed by the insulation cover with the protection level IP65.

C. There is an interlock device between plug-in unit and busway. In order to ensure the safety of operator, the plug-in unit can not be taken off from busway unless MCCB is off.

D. The "ON/OFF "indication is shown on the cover for operation of plug-in unit. There has an interlock between the cover of plug-in unit and MCCB to make sure when MCCB is turned ON that the cover of plug-in unit can not be opened.(Unlock the cover from outside when MCCB is turned ON, which is another option for customer. The price differs from general type.)

E. The design of plug-in unit meets the requirement of IEC60529 IP54/IP55.(IP55 is optional, the price is determined separately.)

F. For minimum distance between busway, please refer to the horizontal/vertical pitch of "Product Installation Description". If the different rated current plug-in unit is installed, the maximum unit size should be used as basis.

G. The design of plug-in unit fingers and flange connection are patented with M328135, low contact resistance is the major advantage for the design.

H. The standard colour of plug-in unit is white N-9.5.(The colour is optional.)

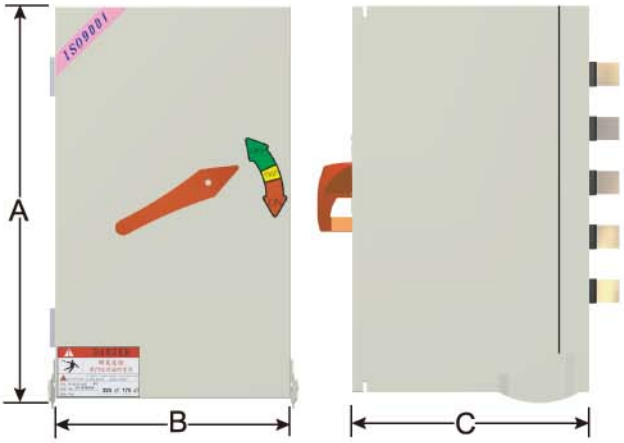

BUSWAY TYPE	CURRENT RATING(A)	DIMENSION(mm) (AxBxC)
3Φ4W+G(5P)	125AF,15AT-125AT	350x260x287
3Φ4W+1/2G(9P)	125AF,15AT-125AT	500x300x307
3Φ4W+G 3Φ4W+1/2G	250AF,126AT-250AT	
3Φ4W+G 3Φ4W+1/2G	400AF,251AT-400AT	600x300x307
3Φ4W+G 3Φ4W+1/2G	600AF,401AT-600AT 800AF,601AT-800AT	900x350x380
3Φ4W+G 3Φ4W+1/2G	1600AF,1001AT-1600AT	1350x500x500

Note:1.Design is based on TO/TG series MCCB of TECO.
2.MCCB other than TECO is selected, the price is discussed separately.

1. When the plug-in unit is taken off, the opening of the leads must be placed by the insluation cover.



2. Install the basement of plug-in unit.



3. Insert the plug-in unit onto the support plate of basement.



4. Installation completed.





1. Temperature correction coefficient for rated current

Maximum ambient temperature °C	20	25	30	35	40	45	50	55	60
Daily average ambient temperature °C	15	20	25	30	35	40	45	50	55
Correction coefficient	1.18	1.14	1.09	1.05	1.00	0.94	0.88	0.82	0.75

2.Voltage drop calculation

$\triangle U = \sqrt{3} \times Is \times L \times (R \cos\theta + X \sin\theta) \times 10^{-6}$

$\triangle U$	=Voltage drop	(Volts)
Is	=Load current	(Amps)
L	=Line length	(m)
R	=Resistance	($\mu\Omega$/m)
X	=Reactance	($\mu\Omega$/m)
$\cos\theta$	=Power factor	
$\sin\theta$	$=\sqrt{(1-\cos^2\theta)}$	

3. Product model identification

LA	08	E	C	5	-	480

LA	Product series code	LA:Low voltage 1kV LA series LB:Low voltage 1kV LB series NLV:Low voltage 1kV NLV series
08	Copper bar width	04 w=40mm , 08 w=80mm , 12 w=120mm , 16 w=160mm, 20 w=200mm, 24 w=240mm,
E	Single/Double conductor of each phase	E Single line D Double line
C	Conductor type	C Copper conductor A Aluminium conductor
5	No. of conductors	
480	Cross sectional area of conductor(mm^2)	$480mm^2$

4.For calculation of general product data or technical information, please contact with manufacturer or local agency.



A.Low voltage busway dieletric tests: Insulation resistance test and power frequency voltage withstand test

Electrical tests		Insulation resistance test	Power frequency voltage withstand
Standards		TECOBAR	IEC 60439-2
Type	Ur at 60Hz V	R at 1kV DC M Ω	U at 60 Hz 1min V
LA 02-04-08-12-16	1000	2000	5000
LB 04-08-12-16	1000	2000	5000
NLV 16-20-24	1000	2000	5000

B. Appearance inspection

The appearance of each element must be inspected. Result to be mentioned in final inspection report.

C. Dimension inspection

All dimensions are to be compared with customer's order sheet. Result to be mentioned in final inspection report.

D. Outgoing test report

Low voltage parts shall be tested prior to shipment and attached with outgoing test report.



Projects Reference List

No.	Project	Industry Type
1.	Shih-Ta Integrated Circuit Corp. - Test Building Project	Wafer Foundry
2.	Winbond Electronics Corp., Factory IV	Wafer Foundry
3.	Winbond Electronics Corp., FAB5 Factory	Wafer Foundry
4.	United Microelectronics Corp., Lien-Cheng Factory II	Wafer Foundry
5.	Winbond Electronics Corp. LV	Wafer Foundry
6.	Phoenix Precision Technology Corporation	Electronic Industry
7.	Phoenix Precision Technology Corporation - FAB5 Factory New Construction Project	Electronic Industry
8.	Kingpak Technology Inc. - Factory	Electronic Industry
9.	Wafer Works Corp., Yang-Mei Factory	Electronic Industry
10.	Arima Computer Corp. - Factory	Electronic Industry
11.	Taiwan Mask Corp., - Hsinchu Factory II	Electronic Industry
12.	Toplux Technology Co., Ltd.	Electronic Industry
13.	ZyXEL Communications Corp.	Electronic Industry
14.	Hwa Tong Electronic Co., Ltd.	Electronic Industry
15.	Hwa Tong Electronic Co., Ltd. - Additional Project	Electronic Industry
16.	HannStar Display Corp.	Electronic Industry
17.	Orient Semiconductor Electronics, Ltd.	Electronic Industry
18.	Winstek Semiconductor Corp.	Electronic Industry
19.	Lite Vision Corp.	Electronic Industry
20.	ARIMA Display Corp.	Electronic Industry
21.	Sheng Yu Technology Co., Ltd.	Electronic Industry
22.	ASYS Corporation	Electronic Industry
23.	Flow Asia Corporation 7-in-1 Project	Electronic Factory
24.	Davicom Semiconductor, Inc., 3-in-1 Project	Electronic Factory
25.	Optodisc Technology Corporation	Electronic Industry
26.	Formosa Epitaxy Inc.	Electronic Industry
27.	Chilisin Electronics Corp.	Electronic Industry
28.	Winstek Semiconductor Corp.	Electronic Industry
29.	HannStar Display Corp. ¡V Chien-Chen Project	Electronic Industry
30.	Powertech Technology Inc.	Electronic Industry
31.	Anpec Electronics Corp.	Electronic Industry
32.	Winstek Semiconductor Corp.	Electronic Industry
33.	TOPPAN CFI	Electronic Industry
34.	Powertech Technology Inc., Phase 2	Electronic Industry
35.	Powertech Technology Inc., Phase 2 Extension Section Equipment	Electronic Industry
36.	Realtek Semiconductor Corp.	Electronic Industry
37.	ZyXEL Communications Corp.V Hsinchu Science Park Factory 4th Floor Renovation Project	Electronic Industry
38.	United Microelectronics Corp. V Southern Taiwan Science Park R&D Building	Electronic Industry
39.	Fu Te Electronics Corp.	Electronic Industry
40.	Kuang-Han Engineering (Carrefour in Hsin-Chuang City)	Electronic Industry
41.	GIO Optoelectronics Corp. V Factory II New Construction Project	Electronic Industry
42.	AGC Display Glass Taiwan Co., Ltd. Phase 10 Factory	Electronic Industry
43.	AGC Display Glass Taiwan Co., Ltd. Phase 7 Factory	Electronic Industry
44.	AGC Display Glass Taiwan Co., Ltd. Phase 10 Factory, Additional Project	Electronic Industry
45.	Toppan Chunghwa Electronics Corp.	Electronic Industry
46.	Song Chuan Precision Co. Ltd. - New Construction Project of Water, Electricity, Fire & Air-conditioning System	Electronic Industry
47.	Hsinchu Durban Science Park, Phase 8 Factory Building Construction Project	Electronic Industry
48.	Wistron Corporation V Hsin-An Factory High Voltage Power Supply Improvement Project	Electronic Industry
49.	GIO Optoelectronics Corp. - LED Factory New Construction Project Phase 2	Electronic Industry
50.	NexPower Technology Corp.	Electronic Industry
51.	Danen Technology Corporation	Electronic Industry
52.	AGC Display Glass Taiwan Co., Ltd. New Factory Construction Project	Electronic Industry
53.	Solar City Intl. Co., Ltd. V Chu-Pei Factory New Construction Project	Electronic Industry
54.	Malico Inc. - New Factory Construction Project	Electronic Industry
55.	AGC Display Glass Taiwan Co., Ltd., Phase 8 New Factory Construction Project	Electronic Industry
56.	Solar City Intl. Co., Ltd. Multicrystalline Section Improvement Project	Electronic Industry
57.	AvanStrate Taiwan Inc.	Electronic Industry
58.	AvanStrate Taiwan Inc. - TF5 Scheduled Repair Project	Electronic Industry
59.	Youngtek Electronics Corp. - New Construction Project of Busway	Electronic Industry
60.	AGC Display Glass Taiwan Co., Ltd., Phase 8 New Factory Construction Project (2)	Electronic Industry
61.	AGC Display Glass Taiwan Co., Ltd., Phase 9 New Factory Construction Project (Follow-up)	Electronic Industry
62.	AGC Display Glass Taiwan Co., Ltd., Phase 9 New Factory Construction Project	Electronic Industry
63.	AvanStrate Taiwan Inc., Phase 3	Electronic Industry
64.	United Microelectronics Corp. - Southern Taiwan Science Park A12 New Construction Project	Electronic Industry
65.	Wafering Technology Corporation - New Factory Construction Project	Electronic Industry
66.	OptoTech Corporation (Factory II)	Electronic Industry
67.	FAB2A-2 Busway System Project	Electronic Industry
68.	Epistar Corporation - N8 Factory High-Voltage Substation Busway System Project	Electronic Industry
69.	N6 Factory Chiller Unit CH#7 V Additional Auxiliary Busway System	Electronic Industry
70.	Wistron Corporation	Electronic Industry
71.	STATS ChipPAC Taiwan Semiconductor Corp. V Bumping Line 30K Dust-free Room Project	Electronic Industry
72.	Hwa Tong Electronic Co., Ltd.	Electronic Industry
73.	Taiwan Semiconductor Manufacturing Co., Ltd., Solar Energy Plant	Electronic Industry
74.	United Microelectronics Corp. V Rectification Section	Electronic Industry
75.	AGC Display Glass Taiwan Co., Ltd.- Phase 3 New Factory Construction Project	Electronic Industry
76.	United Microelectronics Corp. V Southern Taiwan Science Park CUB	Electronic Industry
77.	Solar Technology Inc. Science Park Hsiang-Yun Project (Jung-Hsin Factory) New Construction Project	Electronic Industry
78.	OptoTech Corporation Phase 2	Electronic Industry
79.	Taiwan Semiconductor Mfg. Co. Ltd. - Central Taiwan Science Park Factory 15, Phase 1 New Construction Project	Electronic Industry
80.	AU Optronics Corp., Hou-Li Factory	Electronic Industry
81.	HannStar Display Corp. (Factory in the Southern Taiwan Science Park, Phase 1)	TFT-LCD Factory
82.	HannStar Display Corp. (Factory in the Southern Taiwan Science Park, Phases 2 & 3)	TFT-LCD Factory
83.	Contrel Technology Co., Ltd.	TFT-LCD Factory
84.	Contrel Technology Co., Ltd. Phase 2	TFT-LCD Factory
85.	Acer Internet Center	Data Center
86.	Acer Internet Center V Generator	Data Center
87.	Acer Internet Center V UPS	Data Center
88.	Cathay Nei-Hu Information Center	Data Center
89.	Acer Information V Kun-Ke Computer Facilities New Construction Project	Data Center
90.	Acer Information V Kun-Ke 4th Floor New Construction Project	Data Center
91.	Acer Information V Kun-Ke 5th Floor New Construction Project	Data Center
92.	Acer Information V ABCD No. 4 Generator Busway System Rectification Project	Data Center
93.	Acer Information V ABCD No. 4 Generator Busway System Dismantling Project	Data Center
94.	Myanmar Factory (Project in Myanmar)	Power Plant
95.	EVER Energy Co., Ltd.	Power Plant
96.	Shih-Lin Ginza Building	Office Building
97.	Pao Shiang Construction & Industrial Co. Building	Office Building
98.	Taoyuan County Government Building	Office Building
99.	Pei-Kang Mazu (Goddess) Temple	Office Building
100.	Kaohsiung Fisherman Training Center	Office Building
101.	Ta-Hsin Securities Co. Building	Office Building
102.	Southern Taiwan Science Park Warehouse and Transportation Center	Office Building
103.	Pfizer Inc.	Office Building
104.	Cathay Xinyi e-Financial Building	Office Building



Projects Reference List

No.	Project	Industry Type
105.	Taiwan Prosperity Chemical Corporation	Office Building
106.	Deryunn Commercial Square Building	Office Building
107.	Deryunn Financial Square Building	Office Building
108.	Longshan Temple Library	Office Building
109.	Cathay Financial Information Building	Office Building
110.	Bao Chen Construction Co., Ltd. Building	Office Building
111.	Taipower Headquarters Substation	Office Building
112.	Taiwan Prosperity Chemical Corporation	Office Building
113.	Nangang Software Park, Phase 2	Office Building
114.	Nangang Software Park, Phase 2	Office Building
115.	Taiwan Prosperity Chemical Corporation	Office Building
116.	Taipower Headquarters Substation	Office Building
117.	Chunghwa Telecom, Inc. Building V Ministry of Transport & Communications Building	Office Building
118.	Shung Ye Group, Chungli Office	Office Building
119.	Nangang Police Station	Office Building
120.	Institute of Atomic and Molecular Sciences of Academia Sinica V Generator Replacement Project	Office Building
121.	Taipower Northwest District Office Emergency Supply Maintenance Building	Office Building
122.	Ministry of National Defense V Air Conditioning Section of the Po-Ai Program	Office Building
123.	Taipower Pingtung District Office - Air Conditioning Section National Tax Administration of Northern Taiwan Province,	Office Building
124.	Minister of Finance - New Office Construction Project Environment Protection Administration of	Office Building
125.	Executive Yuan - Office Building Structural Reinforcement & Internal Space Improvement Project	Office Building
126.	Year Round Technology Corp. - New Office Building Construction at Cheng-Tai Road of Wu-Ku Township	Office Building
127.	Protrend Co., Ltd. - Headquarters Building in Nei-Hu District	Office Building
128.	Lite-On Semiconductor Corp. - Additional Engineering Project	Office Building
129.	Fu-Mao Construction Co., Ltd. V Sheng-Hsing Section Engineering Project	Office Building
130.	Academia Sinica - Agricultural Technology Building Construction Project	Office Building
131.	Taipower Co., Taoyuan District West Zone Office - Repair & Maintenance Building Busway System	Office Building
132.	Research Center for Humanities and Social Sciences of Academia Sinica - Emergency Generator Equipment	Office Building
133.	Taoyuan Irrigation Association	Office Building
134.	Chunghwa Telecom, Inc. Building UPS Circuit Additional and Rectification Project	Office Building
135.	Tainan County Environmental Science and Technology Park Building	Office Building
136.	Taiwan Prosperity Chemical Corporation (LV)	Office Building
137.	Taiwan Prosperity Chemical Corporation V 2nd Floor Additional Project	Office Building
138.	Kelti International Co., Ltd. V Xinyi Building Construction Project	Office Building
139.	Kaohsiung Po-Ai Building	Office Building
140.	Hou-Li Extra-high Voltage Substation Construction Project	Office Building
141.	Chunghwa Post V Additional Project of Ai-Kuo Building Rear Block Computer Facilities	Office Building
142.	The Technology Center of the Criminal Investigation Bureau, National Police Agency of the Ministry of the Interior	Office Building
143.	Power Distribution Center of Changhua District Office V Material Building Plumbing & Electricity Work Project	Office Building
144.	Miaoli County Government	Office Building
145.	China Airlines Park Development & Construction Project	Office Building
146.	Taiwan Prosperity Chemical Corporation EPC (Vapor)	Office Building
147.	Changhua District Office Building Air-conditioning System Replacement Project	Office Building
148.	Southern Taipei District Office - Material Building Air-conditioning System Project	Office Building
149.	Cathay World Building Facility Replacement Project	Office Building
150.	Investigation Bureau of the Ministry of Justice V Kaohsiung Office Construction Project	Office Building
151.	Fire Department of Taoyuan County Government- Office Building Construction Project	Office Building
152.	Chunghwa Post V Generator Installation & UPS System Project of Ai-Kuo Building	Office Building
153.	Acer Data Center V Kun-Ke Basement New Construction Project	Office Building
154.	Shin Kong Life Insurance Co., Ltd. V New Construction Office of Multi-purpose Building on Shih-Shang Road	Office Building
155.	Chi-Hsing Technology Co., Ltd. V New Building Construction Project	Office Building
156.	Tung-Kang Post Office Construction Project	Office Building
157.	Tung-Kang Post Office - New Air-conditioning System Construction Project	Office Building
158.	Taipower Co. - Pingtung Chao-Chou Service Office	Office Building
159.	Academia Sinica - Agricultural Technology Building Additional Construction Project	Office Building
160.	Kelti International Co., Ltd. V Xinyi Building Additional Engineering Project (ATS Panel)	Office Building
161.	Changhua District Office Building V Busway Replacement Project	Office Building
162.	China Steel Corp. - Headquarters Building Electrical Engineering Project	Office Building
163.	Chien-Chin Post Office New Building Construction Project	Office Building
164.	Southern Taipei District Office - Material Building Plumbing & Electricity Work Project	Office Building
165.	Taipower Co., Pingtung Chao-Chou Service Office - Additional Work Project	Office Building
166.	M.O.F. National Tax Administration of Central Taiwan Province V Taichung County Branch Office Construction Project	Office Building
167.	Taipei Tax Office, 2nd Floor Computer Facilities V Mechanical & Electrical Engineering Project	Office Building
168.	Changhua District Office, Pei-Tou Service Station Construction Project	Office Building
169.	Taichung Tax Office, 5th Floor Computer Facilities - Mechanical & Electrical Engineering Project	Office Building
170.	National Tax Administration of Northern Taiwan Province - Taipei County Building Project	Office Building
171.	Hsi-Chih Science Park V Xi-Liu Technology New Construction Project	Office Building
172.	Taichung Bureau of Health Promotion	Office Building
173.	Chungho City Land Administration and Tax Office	Office Building
174.	Taipower Co., Dispatch Control Center Hsin-Chuang Secondary City Center Central Government	Office Building
175.	Joint Service Office Building Construction Project V Plumbing & Electricity Engineering Contract	Office Building
176.	China Steel Corp. - Headquarters Construction Project V Generator Contract	Office Building
177.	Miaoli County Government V Additional Project	Office Building
178.	Hua Nan Bank Head Office - World Trade Center Plumbing, Electricity and Air Conditioner Contract	Office Building
179.	Li-Yu-Tan Plant V No. 2 Transformer Busway Replacement Contract	Water Works
180.	Sheng Yu Steel Co. - Factory Building Expansion Contract	Iron & Steel
181.	China Steel Corp. - Mechanical Work Contract	Iron & Steel
182.	Hsinchu Science Park V Warehouse & Transportation Center Phase 1	Logistics Center
183.	Yang Ming Marine Transport Corp. - Kaohsiung Cold-storage Warehouse & Logistics Center	Logistics Center
184.	Yang Ming Marine Transport Corp. - Air- Conditioner Contract for New Construction Project	Logistics Center
185.	Tainan Artillery School	School
186.	Nan Jeon College of Technology	School
187.	National University of Kaohsiung	School
188.	Wu Feng University	School
189.	Fooyin Institute of Technology	School
190.	Tzu Chi University, College of Medicine V Life Building Project	School
191.	National Taiwan Ocean University	School
192.	National Chiao Tung University, Taipei Campus	School
193.	Shu-Te University	School
194.	Ilan Institute of Technology	School
195.	AR-LG Phase 2	School
196.	Army Academy	School



Projects Reference List

No.	Project	Industry Type
197.	National University of Kaohsiung, College of Law	School
198.	National Huwei Institute of Technology	School
199.	Wu Feng Institute of Technology	School
200.	National Chiao Tung University Dormitory	School
201.	Fooyin University	School
202.	Chia Nan University of Pharmacy & Science	School
203.	Cardinal Tien College of Healthcare & Management	School
204.	National University of Kaohsiung, College of Economic Management	School
205.	National Taiwan University - Public Health Building	School
206.	Kun Shan University	School
207.	Wu Feng Institute of Technology V Gymnasium Construction Project	School
208.	Academia Sinica V Astronomy & Mathematics Building Construction Project	School
209.	National Taitung University - Administration Building Construction Project	School
210.	National Chung Hsing University, College of Social Science & Management Building Construction Project	School
211.	Yung-Fu Elementary School, Sanchung City, Taipei County V Phase 2 School Building Renovation Project (hardware)	School
212.	Peng-Lai Elementary School, Ta-Tung District, Taipei City V School Building Renovation, Expansion, and Underground Parking Lot Construction Project	School
213.	Taipei Physical Education College (Tien-Mu)	School
214.	Taipei Municipal Chung Shan Girls Senior High School - Combined Educational Building Construction Project	School
215.	National United University, Pa-Chia Campus (College of Engineering & Science) - Phase 1 Building Construction Project	School
216.	Yang Ming University - Laboratory Building Low Voltage Equipment Wiring Replacement and Grounding I mprovement Project	School
217.	National Taiwan University, Shui-Yuan Campus - Student Dormitory Construction Project (Plumbing & Electricity Contract)	School
218.	National Taichung Nursing College	School
219.	Taipei Physical Education College (Tien-Mu) - Additional Project	School
220.	Shih Chien University V Partial Rectification of Fire Loop Project	School
221.	National Taiwan University ¡V Room No. 2 Power System Improvement (Phase 2) Project	School
222.	Taipei Municipal Shilin Junior High School Combined Educational Building Construction Project	School
223.	National University of Kaohsiung, College of Humanities & Social Science - Building Construction Project	School
224.	National University of Kaohsiung, College of Humanities & Social Science Building New Construction Project	School
225.	Hsinchu Incinerator	Incinerator
226.	Taitung Incinerator	Incinerator
227.	Tainan Incinerator	Incinerator
228.	Hsinchu Incinerator	Incinerator
229.	Chang Hwa Bank, Taichung Branch	Bank, hotel, department store
230.	Lakeshore Hotel Phase 2	Bank, hotel, department store
231.	Far Eastern Department Stores Ltd., Pan-Chiao Branch	Bank, hotel, department store
232.	Chun-Fu Real Estate Co., Ltd. V Hotel on Min-Sheng Road Project	Bank, hotel, department store
233.	Heng-Chang Development Co., Ltd. V Nei-Hu Phase 6 Industrial Zone	Bank, hotel, department store
234.	Taiwan Sugar Corp., Nan-Tzu Wholesale Store	Bank, hotel, department store
235.	Cathay Tainan Shopping Center	Bank ,hotel ,department store
236.	Taiwan Sugar Corp., Jen-Te Shopping Center	Bank, hotel, department store
237.	Nice Prince Hotel and Nice Plaza V Plumbing, Electricity, Fire and Air-conditioning System Project	Bank, hotel, department store
238.	Miramar Resort - New Construction Project	Bank, hotel, department store
239.	Shilin Shopping Complex - Shopping Mall Block	Bank, hotel, department store
240.	Fullon Hotels & Resorts - Busway Repair and Maintenance Project	Bank, hotel, department store
241.	Kaohsiung Talee Department Store	Bank, hotel, department store
242.	Kaohsiung Talee Department Store - Additional Project	Bank, hotel, department store
243.	Vietnam Halong Bay Hotel	Bank, hotel, department store
244.	Radium Kagaya International Hotel Co. - New Construction Project	Bank, hotel, department store
245.	Shihlin Electric & Engineering Corp. - Shopping Mall Block Electrical Engineering Contract of the Shih Lin Factory Land Development Project	Bank, hotel, department store
246.	Chu-Pei Sheraton Hotel - New Construction Project	Bank, hotel, department store
247.	E-DA Outlet Mall - New Construction Project	Bank, hotel, department store
248.	E-DA Theme Park - New Construction Project	Bank, hotel, department store
249.	Evergreen Resort Hotel - New Construction Project	Bank, hotel, department store
250.	Evergreen Resort Hotel - New Construction Project (Additional Work Contract)	Bank, hotel, department store
251.	Ding Zan Development Co., Ltd. V Tamsui Fishers Resort Art Plaza and Hotel Construction Project	Bank, hotel, department store
252.	Chang Hwa Bank - High-voltage Substation Repair & Maintenance Work Project	Bank, hotel, department store
253.	Yamay Theme Park - Theme Hotel Construction Project	Bank, hotel, department store
254.	K-Hotel (Taipei)	Bank, hotel, department store
255.	Formosa Chemicals & Fibre Corp. SM2 Sixth Naphtha Cracker Project	Petrochemical industry
256.	Oriental Petrochemical (Shanghai) Corporation	Petrochemical industry
257.	Shanghai Chlor-Alkali Chemical Co., Ltd.	Petrochemical industry
258.	Shanghai Coking & Chemical Corp.	Petrochemical industry
259.	Yanchang Petroleum (Group) Co., Ltd. V Low-voltage Busway System (Transformer Unit 41)	Petrochemical industry
260.	Yanchang Petroleum (Group) Co., Ltd. V Low-voltage Busway System (Transformer #3)	Petrochemical industry
261.	Yanchang Petroleum (Group) Co., Ltd. V Low-voltage Busway System (Water Supply & Wire Distribution Room)	Petrochemical industry
262.	Nan Ya Plastic Corp. and Formosa Chemicals & Fibre Corp. - Factory	Petrochemical industry
263.	Nan Ya Plastic Corp. and Formosa Chemicals & Fibre Corp. - Vietnam Nhon Trach Plant Phase 1	Petrochemical industry
264.	Nan Ya Plastic Corp. and Formosa Chemicals & Fibre Corp. - Vietnam Nhon Trach Plant Phase 2	Petrochemical industry
265.	China Man-Made Fiber Corporation - ASU Factory Construction Project	Petrochemical industry
266.	Tasco Chemical Corp. - New Construction Project	Petrochemical industry
267.	Formosa Chemicals & Fibre Corp. - Hai Feng SM3 Plant	Petrochemical industry
268.	Hua-Hsia Polymer Co., Ltd., PVC Plant	Petrochemical industry
269.	Nan Ya Plastic Corp. and Formosa Chemicals & Fibre Corp. - Vietnam Nhon Trach Plant Phase 3 (VN2)	Petrochemical industry
270.	Nan Ya Plastic Corp. and Formosa Chemicals & Fibre Corp. - Vietnam Nhon Trach Plant (third water source for public use)	Petrochemical industry
271.	Yen An Oil Refinery Yanchang Petroleum (Group) Co., Ltd.	Petrochemical industry
272.	Ammonia & Urea Plants in MARY	Petrochemical industry
273.	Formosa Chemicals & Fibre Corp., Ningbo Plant	Petrochemical industry
274.	Formosa Plastic Corp., Mai-Liao Cogeneration Aeration Pool - Low Voltage Panel	Petrochemical industry
275.	Yantai Raffles Offshore Ltd. F&G Millennium SA Semi-Submersible Drilling Unit (Rockwell) Barefield Semi-submersible Drilling Unit (Hull No. YRO2006-193 Busway System)	Oil drilling platform
276.	Hohehaote Oil Refining Project	Oil drilling platform
277.	National Museum of Prehistory	Museum
278.	Chi Mei Medical Center	Hospital
279.	Taichung Veterans General Hospital	Hospital
280.	Taoyuan General Hospital, Hsin-Wu Branch	Hospital
281.	National Taiwan University Hospital, Research Building	Hospital
282.	Kaohsiung Medical University, College of Medicine	Hospital
283.	Changhua Christian Hospital	Hospital
284.	Lo-Sheng Sanatorium	Hospital



Projects Reference List

No.	Project	Industry Type
285.	Taichung Hospital	Hospital
286.	Hualien County Yu-Li Hospital	Hospital
287.	Tou-Liu Hospital - New Construction Project	Hospital
288.	China College of Medical Technology V 2nd Student Dormitory Construction Project	Hospital
289.	Chi Mei Medical Center	Hospital
290.	Chiayi Chang Gung Memorial Hospital	Hospital
291.	Hualien Mennonite Christian Hospital - New Construction Project	Hospital
292.	Taipei Hospital (Sanchung) Renovation Work Project	Hospital
293.	Kaohsiung Medical University V 2nd Education & Research Building Construction Project	Hospital
294.	Tian Chen Hospital - New Construction Project	Hospital
295.	Kaohsiung Medical College - Old Campus Expansion Project	Hospital
296.	Tri-Service General Hospital - Renovation Work Project	Hospital
297.	Tri-Service General Hospital, Ting-Chou Branch V Power Equipment Replacement Project	Hospital
298.	Taiwan Electric Research and Testing Center	Testing Center
299.	Taiwan Electric Research and Testing Center - Solar Cell & Display Laboratory Wire Distribution Project	Testing Center
300.	Taiwan Photon Source Synchrotron Accelerator - New Construction Project	Testing Center
301.	Taiwan Mobile Co., Ltd., Customer Service Center	Telecom Engine Room
302.	Chunghwa Telecom, Inc., Nan Kang Engine Room	Telecom Engine Room
303.	Taiwan Mobile Co., Ltd., Nei-Hu Electro-Optical Building - IDC Engine Room Construction Project	Telecom Engine Room
304.	New Century InfoComm Tech Co., Ltd. - Panchiao Engine Room Construction Project	Telecom Engine Room
305.	Taiwan Mobile Co., Ltd. - New Construction Project	Telecom Engine Room
306.	National Center for High-Performance Computing - Engine Room Expansion Project	Telecom Engine Room
307.	Tainan Anping Harbor	Wharf
308.	China Shipbuilding Corp., Keelung Ship Yard V Starboard	Wharf
309.	China Shipbuilding Corp., Keelung Ship Yard V Portside	Wharf
310.	Shanghai Waigaoqiao	Wharf
311.	Tsoying North Port Wharf V On-shore Power Equipment Repair Work Project	Wharf
312.	Kaohsiung City Y-043 Wharf V On-shore Power Equipment Repair Work Project	Wharf
313.	Kaohsiung Port Intercontinental Container Terminal - Phase 1	Wharf
314.	TECO Electric & Machinery Co. Ltd., Kuan-Yin Factory	Factory
315.	Romastone Co., Ltd., China Factory	Factory
316.	TECO Electric & Machinery Co. Ltd., Wuxi Factory	Factory
317.	TECO Electric & Machinery Co. Ltd., Wuxi Factory	Factory
318.	Yulon Motors (Car Body Plant)	Factory
319.	Yulon Motors (Assembly Plant)	Factory
320.	Yulon Motors V Car Factory	Factory
321.	Kyodo Kokusan K.K., Tainan Branch	Factory
322.	Li-Peng Polymer Co., Ltd.	Factory
323.	Li-Peng Polymer Co., Ltd.	Factory
324.	Shin Zu Shing Co., Ltd. V Shu-Lin Factory	Factory
325.	Changhua Pou Chen Group	Factory
326.	Tonnie Cosmetics Co., Ltd.	Factory
327.	TECO Electric & Machinery Co. Ltd. - Jiangxi Factory Relocation Project	Factory
328.	TECO - Qingdao Compressor Factory Construction Project	Factory
329.	TECO - Qingdao Compressor Factory Busway Connector Additional Project	Factory
330.	Raheja Mindspace (India Project)	Factory
331.	Depo Auto Parts Ind. Co., Ltd. ¡V Hsin-Ying Injection Plant Construction Project	Factory
332.	Jenn Feng Industrial Co., Ltd., Ping-Chen Factory - Voltage Adjustment and Partial Construction Project	Factory
333.	Jenn Feng Industrial Co., Ltd., Ping-Chen Factory - Voltage Adjustment and Partial Construction Project	Factory
334.	Lung-Te Public Factory - Electric Room Firefighting Instrumentation Improvement Project	Factory
335.	Changhua Rayon Factory #1 - Power Equipment of Refrigerant Fluid Crystallization Electric Room	Factory
336.	STATS ChipPAC Taipei Semiconductor Corp. - Generator Equipment Expansion Project	Factory
337.	Swancor Ind. Co., Ltd. ¡V Factory Building Extension Project	Factory Building
338.	TECO Fujian Factory Phase 1 Construction Works	Factory Building
339.	Ta-I Technology Co., Ltd. - Factory Building Renovation Project	Factory Building
340.	Topcell Solar International Co., Ltd. V Kuan-Yin Factory Construction Project (Phase 2 Dormitory)	Factory Building
341.	Topcell Solar International Co., Ltd. V Kuan-Yin Factory Construction Project (Copper Busway)	Factory Building
342.	Topcell Solar International Co., Ltd. V Kuan-Yin Factory Construction Project (Aluminum Busway System)	Factory Building
343.	Topcell Solar International Co., Ltd. V Kuan-Yin Factory 2nd Floor Expansion Project	Factory Building
344.	Win Semiconductors Corp. - Hwa Ya Technology Park Factory # 3 Renovation & Electrical Work Project	Factory Building
345.	Procrystal Technology Co., Ltd. - Secondary Distribution Project for Machines	Factory Building
346.	Chi Mei Lighting Technology Corp. V Factory # 2 Wire Distribution & Automatic Control Project	Factory Building
347.	TXC Corporation - Phase 3 Factory Construction Project	Factory Building
348.	Procrystal Technology Co., Ltd. - Factory #1 Phase 3 Construction Project	Factory Building
349.	Hirose Tech Co., Ltd. V Lung-Tan Factory Construction Project - Electrical Engineering System	Factory Building
350.	BAOTEK Inc. - Factory & Office Building Construction Project	Factory Building
351.	Cheng Loong Corp., Hou-Li Factory V Unit 10 Factory Construction Works	Factory Building
352.	Te-Lin Enterprise Co., Ltd. V New Construction Project of Factory located at Lot no. 483-3, Kuang-Jung Section, Hsin-Chuang City	Factory Building
353.	Grand Dynasty Industrial Co., Ltd. V New Construction Project of Factory located at Lot no. 483-1, Kuang-Jung Section, Hsin-Chuang City	Factory Building
354.	Yeashin Develop Technology Co., Ltd. - New Construction Project	Factory Building
355.	UER Technology Corporation - New Construction Project	Factory Building
356.	Tungpei Industrial Co., Ltd. - Precision Bearing Factory (On-site Work)	Factory Building
357.	Taiwan Pxmart V Sha-Tien Factory	Factory Building
358.	Taipower Northern District Storage & Transportation Center - New Construction Project	Factory Building
359.	Shern Yeong Precise Optical Co., Ltd. - Factory Construction Project	Factory Building
360.	Heran Factory & Office Building Construction Project	Factory & Office
361.	Chiao Thai Hsing Enterprise Co., Ltd. V Yang-Mei Flour Factory Construction Project	Factory Building
362.	HTC Corporation - Taoyuan Kui-Shan Factory & Office Building Construction Project	Factory Building
363.	Changxingdao Shipyard	Shipyard
364.	Waigaoqiao Shipyard	Shipyard
365.	Changxingdao Shipyard 1# 2# Dockyard	Shipyard
366.	Changxingdao - Min-Pin Project	Shipyard
367.	Tainan High Speed Railway Station	HSR Station
368.	Taichung High Speed Railway Station	HSR Station
369.	Chiayi High Speed Railway Station	HSR Station
370.	Yen-Chao High Speed Railway Station	HSR Station
371.	Liu-Chia High Speed Railway Station	HSR Station
372.	Shin Kong Mitsukoshi Development V Tsoying Station Business Development Zone Project	Kaohsiung rapid transit
373.	Kaohsiung Rapid Transit Corp.	Kaohsiung rapid transit
374.	Kaohsiung Rapid Transit Corp. (Generator Contract)	Kaohsiung rapid transit
375.	Kaohsiung Rapid Transit Corp. - Operation Control Center	Kaohsiung rapid transit
376.	Kaohsiung Rapid Transit Corp. V Ta-Liao Depot Busway Replacement Project	Kaohsiung rapid transit
377.	Motor Control Panel Copper Busway Procurement (City Government) MRT Project, City Hall Station	City Hall MRT Station



Projects Reference List

No.	Project	Industry Type
378.	Taoyuan International Airport Access MRT System Construction Plan - CU02 Construction Bid V Plumbing & Electrical Work Project	Airport Access MRT System
379.	Taoyuan International Airport Access MRT System Construction Plan - CU03 Construction Bid V Plumbing & Electrical Work Project	Airport Access MRT System
380.	Taoyuan International Airport Access MRT System Construction Plan ¡V CE02 Construction Bid V Plumbing & Electrical Work Project	Airport Access MRT System
381.	Taipei Station V CL308/363/365/368/373 Bid	HSR Station
382.	Sung-Shan Station - Civil Engineering and Electrical Engineering Project; Tunnel Section from Kun-Yang Street to Keelung Road (Plumbing & Electrical Work and Joint Tender on Additional Busway System)	Sung-Shan Station
383.	Hsuehshan Tunnel - Busway Replacement Project	Tunnel
384.	Hsuehshan Tunnel - Busway Replacement Project (2)	Tunnel
385.	Hsuehshan Tunnel - Busway Replacement Project (3)	Tunnel
386.	Chiang Kai-shek International Airport	Aviation
387.	Evergreen Aviation Technology Corp., Hangar No. 2	Aviation
388.	Far Glory Air Cargo Terminal	Aviation
389.	Chiang Kai-shek International Airport, Radar Station	Aviation
390.	Civil Aeronautics Administration, North Terminal	Aviation
391.	Aerospace Industrial Development Corp., Hangar No. 6	Aviation
392.	Ho-Hsin Lotus Hill	Residential Building
393.	Zhishan Garden	Residential Building
394.	Lu-Kuang 2nd Village	Residential Building
395.	Galaxy Aqua City	Residential Building
396.	A Date in Tamsui	Residential Building
397.	Star of Lih Pao	Residential Building
398.	Tainan County Tang-Shan Village - New Construction Project	Residential Building
399.	World Garden ¡V Bridge Up To Zenith Construction Project Lih Pao Construction Co., Ltd. V Pan-Chiao City New	Residential Building
400.	Pan-Chiao Section, 30-story Residential & Commercial Building Construction Project	Residential Building
401.	Bao-Chan Construction Co., Ltd. V (Shen-Keng) New Construction Project	Residential Building
402.	Lan-Hai Phase 1 New Construction Project	Residential Building
403.	Huang Hsiang Construction Corporation V 20-story Building on Sung-Te Road Project	Residential Building
404.	Kaohsiung City Government, Economic & Trade Square	Residential Building
405.	Lien-Chu-Fang-Ting Lih Pao Construction Co., Ltd. V Pan-Chiao City New	Residential Building
406.	Pan-Chiao Section, 30-story Residential & Commercial Building Construction Project - Additional 2000A	Residential Building
407.	Lung-Huang Development Co., Ltd. - Sanchung City Yung-Te Section Construction Project	Residential Building
408.	Xinyi Residential Building	Residential Building
409.	Yueh-Sheng Building - New Construction Project Chung Yuet Group V New Construction Project of 12	Residential Building
410.	land lots located on No. 256, Yang-Chou Section, Lu-Chu Hsiang	Residential Building
411.	Huaku Development Co., Ltd. ¡V Jui-Kuang Section	Residential Building
412.	Farglory Land Development Co., Ltd. - M61 Project	Residential Building
413.	Kuan-Tu Star of the North	Residential Building
414.	MRT Xindian Line Depot - Joint Development Project (Mei-Ho City)	Residential & Commercial Building
415.	Kung-Hsieh Village, Feng-Shan District, Kaohsiung County - New Construction Project	Military Dependents Village
416.	Ilan County Government Administration Center - Military Dependents Village Construction Project	Military Dependents Village
417.	Southern Taiwan Science Park, Phase 2 Site Sewage Treatment Plant	Sewage Treatment Plant
418.	Peace Island Sewage Treatment Plant, Phase 1 New Construction Project	Sewage Treatment Plant
419.	Peace Island Sewage Treatment Plant, Phase 1 New Construction Project (Additional Works)	Sewage Treatment Plant
420.	Central Taiwan Park, Sewage Treatment Plant	Sewage Treatment Plant
421.	Taipei Gymnasium (Air-conditioning Works)	Sports Stadium
422.	Taipei Gymnasium (Plumbing & Electrical Works)	Sports Stadium
423.	Taipei Stadium (Hsin-Jui-Cheng)	Sports Stadium
424.	Pan-Chiao Neo Sky Dome - New Construction Project	Sports Stadium
425.	Pan-Chiao Neo Sky Dome - New Construction Project (435A Additional Works)	Sports Stadium
426.	MOEA Nan-Kang Exhibition Hall - New Construction Project	Exhibition Hall
427.	Le-Shan Radar Station	Radar Station
428.	Taipei Station Underground Shopping Street V High- & Low-voltage Electrical Equipment	Shopping Mall
429.	B&Q Nan-Kan Shopping Mall - New Construction Project (Electrical Works)	Shopping Mall
430.	Fubon A10 Xinyi District Shopping Mall & Hotel - New Construction Project	Shopping Mall
431.	Pingtung County Mi-Li Community ES Extra-high Voltage Construction Project	Substation
432.	Kaohsiung Extra-high Voltage ES Construction Project	Substation
433.	Yu-Ching-Tang	Cement Plant
434.	Indonesian Paper Mill	Paper Mill
435.	Lealea Group - Additional Project	Textile
436.	Nankang Software Park - Phase 3 New Construction Project	High Tech Factory
437.	Nankang Software Park - Phase 3 Busway System Construction Project	High Tech Factory
438.	Pu-Li Lingyen Mountain Temple V Central Hall Construction Project (Electrical Engineering System)	Temple
439.	AF-AUFN Program - Operation Zone Renovation Works	Military Barrack
440.	Army Hua-Shan Barrack	Military Barrack
441.	Taiwan Yen-Wan Skill Training Institute	Jailhouse
442.	Hsinchu City Funeral Parlor & Funeral Hall Construction Project V Plumbing & Electrical Engineering Project	Funeral Parlor
443.	Ta-Chia Township First Public Retail Market Renovation & Repair Plan Project	Market
444.	Shui-Yuan Market Repair & Renovation Project	Market
445.	Feng-Shan RT-MART, Feng-Shan City, Kaohsiung County - New Construction Project	Shopping Mall
446.	Tou-Fen RT-MART Factory Building - New Construction Project	Shopping Mall
447.	Da Dong Art Center, Feng-Shan City	Art Center
448.	Da Dong Art Center, Feng-Shan City V Phase 2	Art Center
449.	Hualian Creative Culture & Industrial Park V Air-conditioning & Electrical Equipment Project	Art Center
450.	Farglory Land Development Co., Ltd. - O3 Financial Center Construction Project	Financial Center
451.	Jia-Lin Junior High School, New Taipei City V School Campus Construction Project	School
452.	Kuang-Yang Science Park (Ching-Tien Factory) - New Construction Project	Electronic Industry
453.	Sunworld Dynasty Taipei Hotel - E & M System Improvement & Renewal Project (Electrical Engineering Works)	Bank, hotel, department store
454.	Songshan Tobacco Factory - Cultural Park BOT Program (Electrical Engineering Works)	Bank, hotel, department store
455.	Actron Technology Corporation - Factory Building Construction Project	Factory Building