BRITISH STANDARD

BS 8313 : 1997

Code of practice for

Accommodation of building services in ducts

ICS 91.140.01

NO COPYING WITHOUT BSI PERMISSION EXCEPT AS PERMITTED BY COPYRIGHT LAW

Committees responsible for this British Standard

The preparation of this British Standard was entrusted to Technical Committee B/209/14, Building services, upon which the following bodies were represented:

Combustion Engineering Association
Institute of Plumbing
British Gas plc
Chartered Institution of Building Services Engineers
Clay Pipe Development Association Limited

This British Standard, having been prepared under the direction of the Sector Board for Building and Civil Engineering, was published under the authority of the Standards Board and comes into effect on 15 July 1997

BSI 1997

First published as CP 413, March 1951
Second edition July 1973
Third edition July 1989
Fourth edition July 1997

The following BSI references relate to the work on this standard:
Committee reference B/209/14
Draft for comment 96/103803 DC

ISBN 0 580 27363 6

Amendments issued since publication

Amd. No.	Date	Text affected

Contents

		Page
Committees responsible		Inside front cover
Foreword		iii
Code of practice		1
1	Scope	1
2	References	1
3	Definitions	1
4	Exchange of information	2
5	Materials and components	2
6	General	2
7	Restrictions on positioning and combination of services	3
8	Space requirements	6
9	Access	7
10	Protection of services in ducts	10
11	Drainage of service ducts	10
12	Ventilation of service ducts	10
13	Fire precautions	12
14	Other safety precautions	14
15	Service entries and exits	15
16	Identification and marking	16
17	Duct construction	16
18	Inspection and testing	17
19	Maintenance	17
Annexes		
A	(informative) Installation space for air ducts (detailed method)	18
B	(informative) Installation space for air ducts (simplified method)	39
C	(informative) Work in confined spaces	42
D	(informative) Acts, bylaws and statutory regulations	42
Tables		
1	Free area of ventilation opening for dispersal of small leaks	11
A.1	Dimensions where $f_1 = 100$ and $f_2 = 300$	27
A.2	Dimensions where $f_1 = 100$ and $f_2 = 300$	28
A.3	Dimensions where $f_1 = 100$ and $f_2 = 300$	29
A.4	Dimensions where $f_1 = 100$ and $f_2 = 300$	30
A.5	Values of e_a and e_b	31
A.6	Values of e_{a1}, e_{a2}, e_{b1} and e_{b2}	31
A.7	Values of e_{a1}, e_{a2}, e_{b1} and e_{b2} by firm obstacles	33
A.8	Values of n for a firm obstacle on one side	36
A.9	Values of n for a firm obstacle on two sides	37
A.10	Values of n for a firm obstacle on three sides	37
A.11	Values of n for a firm obstacle on four sides	38
B.1	Dimensions of X	41

Figures

1	Minimum sizes of access openings for passage by persons	7
2	Anthropometric data	8
A.1	Space with limitations due to firm obstacles	20
A.2	Jointing and supporting air ducts without insulation and with a firm obstacle on one side	20
A.3	Jointing and supporting air ducts without insulation and with a firm obstacle on two sides	21
A.4	Jointing and supporting air ducts without insulation and with a firm obstacle on three sides	21
A.5	Jointing and supporting air ducts without insulation and with a firm obstacle on four sides (obstacle not continuous for more than 1 m)	22
A.6	Jointing and supporting pre-insulated air ducts with a firm obstacle on one side	22
A.7	Jointing and supporting pre-insulated air ducts with a firm obstacle on two sides	23
A.8	Jointing and supporting pre-insulated air ducts with a firm obstacle on three sides	23
A.9	Jointing and supporting pre-insulated air ducts with a firm obstacle on four sides (obstacle not continuous for more than 1 m)	24
A.10	Insulation of an air duct in position with a firm obstacle on one side	24
A.11	Insulation of an air duct in position with a firm obstacle on two sides	25
A.12	Insulation of an air duct in position with a firm obstacle on three sides	25
A.13	Insulation of an air duct in position with a firm obstacle on four sides (obstacle not continuous for more than 1 m)	26
A.14	Examples of installation spaces for flange jointed air ducts	26
A.15	Installation space dimensions A and B for flange jointed air ducts with a firm obstacle on one side	27
A.16	Installation space dimensions A and B for flange jointed air ducts with a firm obstacle on two sides	28
A.17	Installation space dimensions A and B for flange jointed air ducts with a firm obstacle on three sides	29
A.18	Installation space dimensions A and B for flange jointed air ducts with a firm obstacle on four sides	30
A.19	Examples of installation space for slip jointed air ducts	31
A.20	Installation space dimensions A and B for slip jointed air ducts with a firm obstacle on one or more sides	32
A.21	e-values	33
A.22	Minimum access allowance e for air ducts insulated in position	34
A.23	Installation space dimensions A and B for air ducts insulated in position with a firm obstacle on one side	34
A.24	Installation space dimensions A and B for air ducts insulated in position with a firm obstacle on two sides	35
A.25	Installation space dimensions A and B for air ducts insulated in position with a firm obstacle on three sides	35
A.26	Installation space dimensions A and B for air ducts insulated in position with a firm obstacle on four sides	36
B.1	Installation spaces for uninsulated or pre-insulated air ducts	40
B.2	Installation spaces for air ducts insulated after installation	41
Index		44
List of references		47

Foreword

This British Standard has been prepared under the direction of the Technical Committee B/209. It supersedes BS 8313 : 1989, which is withdrawn.

This edition introduces technical changes but it does not reflect a full review or revision of the document, which will be undertaken in due course.

This code of practice is intended to provide architects, engineers, builders, contractors, suppliers, specialists, and service engineers with recommendations for the design, construction, installation and maintenance of ducts in buildings for the accommodation of services. It also covers ducts attached to the outside of buildings, suspended flooring and ceiling voids, and cavities which are used for services but not always referred to as ducts. Annex A gives a detailed method for calculating the minimum cross-sectional dimensions of space required in service ducts for the installation and maintenance of thin walled HVAC ducting and annex B provides a simplified method for doing the same calculation. Annex C draws attention to the stressful nature and potential hazards associated with working in a confined space and annex D lists Acts, bylaws and statutory regulations which relate to the accommodation and maintenance of building services in ducts.

As a code of practice, this British Standard takes the form of guidance and recommendations. It should not be quoted as if it were a specification and care should be taken to ensure that claims of compliance are not misleading. In particular, attention is drawn to **6.1** and the fact that statutory legislation may impose more stringent requirements in certain circumstances.

The standard should not be regarded as a substitute for expert advice. The intention is that it should complement it.

Every fire authority has Fire Prevention Officers who will advise designers, owners and occupiers and who will welcome liaison with architects and facilities engineers on the safety aspects of building design. Advice can also be obtained from the Health and Safety Executive and from local authorities on matters relating to health and safety, and from Building Control Officers if new buildings or major alterations are involved.

Compliance with a British Standard does not of itself confer immunity from legal obligations.

Summary of pages

This document comprises a front cover, an inside front cover, pages i to iv, pages 1 to 48, an inside back cover and a back cover.

blank

Code of practice

1 Scope

This British Standard gives recommendations for the design, construction, installation and maintenance of ducts in buildings used for the accommodation of services. It also covers enclosures such as ceiling voids and cavities which are used for services but which are not always referred to as ducts.

The recommendations in this standard should also be applied as far as practicable to the adaptation, modification or refurbishment of existing ducts and services within them. Appropriate precautions should be taken in all cases where the existing ducts contain hazardous materials, e.g. asbestos.

This standard covers service ducts attached to the outside of buildings but not service ducts between buildings.

This standard does not cover the design and construction of air or refuse ducts, nor those with 'heart units', 'packaged plumbing' or 'service walls', although parts of it are relevant to them.

This standard does not cover spaces intended mainly for purposes other than the accommodation of services, nor with plant areas such as boiler and calorifier rooms or gas storage areas.

The piping of radioactive substances and the specialist requirements for piping cryogenic liquids are generally outside the scope of this standard.

2 References

2.1 Normative references

This standard incorporates, by dated or undated reference, provisions from other publications. These normative references are made at the appropriate places in the text and the cited publications are listed on page 47. For dated references, only the edition cited applies; any subsequent amendments to or revisions of the cited publication apply to this standard only when incorporated in the reference by amendment or revision. For undated references, the latest edition of the cited publication applies, together with any amendments.

2.2 Informative references

This standard refers to other publications that provide information or guidance. Editions of these publications current at the time of issue of this standard are listed on page 48, but reference should be made to the latest editions.

3 Definitions

For the purposes of this British Standard the definitions given in BS 6100 apply, together with the following.

3.1 duct

Space formed for the passage of cables, pipes, etc.

3.2 service duct

Duct that allows working space.

3.3 pipe sleeve

Protective pipe through which a carrier pipe or cable is later passed.

3.4 cavity barrier

Construction provided to seal a cavity against the penetration of smoke and flame, or within a cavity to restrict the movement of smoke and flame within the cavity.

3.5 fire compartmentation

Division of a building into compartments by elements of building construction intended to resist the passage of fire, and capable of meeting specified performance criteria to those ends.

3.6 fire door

Door or shutter provided for the passage of persons, air or objects which, together with its frame and furniture as installed in a building, is intended when closed to resist the passage of fire and/or gaseous products of combustion and is capable of meeting specified performance criteria to those ends.

3.7 fire resistance

Ability of a component or construction of a building to satisfy for a stated period of time some or all of the criteria specified in BS 476 : Part 4 and BS 476 : Part 24, covering stability, integrity and insulation.

3.8 fire stop

Seal provided to close an imperfection of fit between elements, components or construction in a building, or in any joint, so as to restrict penetration of smoke and flame through that imperfection or joint.

3.9 firm obstacle

Any obstacle that will interfere with the installation, dismantling or maintenance of a service.

3.10 flash point

Lowest temperature at which vapour from oil, etc. can be ignited by an external source.

3.11 installation space

Recommended minimum space necessary for the installation and maintenance of one or more services where access is limited by a firm obstacle. It is expressed as a rectangular envelope at right angles to and at any point along a run of services. It includes allowances for supports, thermal and sound insulation, and safety margins.

3.12 material of limited combustibility

Material that conforms to any of the specifications given for materials of limited combustibility in the Approved Document published in connection with B2/B3/B4 of the Building Regulations 1991[1].

3.13 nominal size

Size used in the designation of appliance or component.

3.14 protected shaft

Stairway, lift, escalator, chute, duct, or other shaft which enables persons, objects or air to pass from one compartment to another.

3.15 protected stairway

Stairway, including any exit passageway leading therefrom to its final exit, enclosed with (other than any part that is an external wall of a building) fire-resisting construction.

3.16 budget lock

Lock that has a pivoted tongue, that, when turned 90° by a key, swings into a slot striking plate to serve as a deadbolt.

4 Exchange of information

4.1 Responsibility for design

Before work is begun, a person should be appointed to be responsible for design of the service ducts and co-ordination of the services within them.

4.2 Consultation and co-ordination

The necessary consultation and co-ordination should be carried out and particular attention should be paid to the following points:

a) brief from client;

b) system for ensuring that drawings and specifications reach those who need them;

c) system for spatial co-ordination;

d) project programme;

e) consultation with planning, building regulations and fire authorities;

f) consultation with gas, electricity, water, sewerage and telecommunications authorities;

g) consultation with insurers;

h) consultation with suppliers of special services such as industrial and medical gases (or other authoritative source);

i) operation and maintenance instructions;

j) the possibility of increased future requirements owing to further development within or adjacent to the project should be considered.

NOTE. Lack of systematic advance planning of services can result in delays and expensive alterations.

5 Materials and components

5.1 British Standards

Materials and components should conform to relevant British Standards.

5.2 Choice of materials and components

Factors that should be considered when duct materials and components are selected are as follows, not necessarily in order of importance.

a) Mechanical properties: strength, elasticity, ductility and mass.

b) Electrical properties: electrical conductivity and electrical insulating strength (of an insulator).

NOTE. Insulating materials may create the risk of electrostatic discharges.

c) Chemical properties: corrosion, dissolution or other failure that may result from reaction with other constituents of the duct or services (e.g. galvanic corrosion of mixed metals), escape of gases or liquids within the duct, or the action of water vapour, steam or other vapours in the air.

d) Thermal properties: thermal conductivity, thermal expansion and stability.

e) Acoustic properties: acoustic absorption and insulation.

f) Health hazards. The material or component once installed should not be hazardous to persons or to the environment. Materials that are poisonous or produce harmful gases or dusts before or during installation should be closely controlled. Attention is drawn to the controls in relation to asbestos imposed by the Health and Safety at Work etc. Act 1974 [2], the Asbestos (Licensing) Regulations 1983 [3] and the Asbestos (Prohibition) Regulations 1992 [4] and the Control of Asbestos at Work Regulations 1987 [5]. Guidance on work involving exposure or potential exposure to asbestos is found in the Health and Safety Executive (HSE) publications EH10 [6], L27 [7] and L28 [8]. Components should be free of sharp edges and projecting spikes, and should be easy to assemble.

g) Resistance to fire: combustibility, fire resistance and resistance to fire spread of the completed duct and its contents should always be assessed as part of the overall fire engineering design of the building.

h) Resistance to pests: materials should not be liable to attack by insects, fungi or vermin or should be protected by suitable preservatives.

i) Cost and availability: cost and availability affect both construction and maintenance.

j) Ease of installation and maintenance. Materials and components should be chosen taking into consideration the labour, tools and equipment likely to be available for installation and maintenance, including cleaning. If installation and maintenance is easy, it is more likely to be done properly.

6 General

6.1 Statutory provisions

It is essential that designers of buildings, service installations and ducts are aware that there is a wide range of Acts, Regulations and Bylaws covering such work in England and Wales, Scotland and Northern Ireland (see annex D). It is their duty to ensure compliance with the relevant requirements.

6.2 Principles of general arrangement

Most projects require that services be enclosed for part of their route through the building or buildings. Services may be enclosed in a variety of types of space.

Service ducts may be formed as part of the building structure or as non load bearing elements.

Service ducts may be inside a building or attached to its outside along their length.

The complexity of the system of service ducts and associated spaces depends on the size of the project and the density of the services within it. The system should always be considered as a whole. Every effort should be made to simplify it, in order to ease design, construction and maintenance.

The starting point for the general arrangement of the duct system should be a sketch or sketches showing the proposed service ducts, which services they are intended to contain and the approximate capacities. The point of entry for services should normally be on that side of the building nearest to the street in which the mains are installed.

It is often appropriate to build up the duct system from the following three types of ducts:

a) horizontal main ducts;

b) vertical main ducts;

c) secondary ducts.

The designer may use some other system if appropriate.

In multi-storey buildings, a smaller number of large vertical ducts with adequate provision for horizontal distribution above ceiling level and below structural members, or in service floors, will generally give the most flexible arrangement.

A larger number of small vertical ducts with ceiling spaces for horizontal distribution as necessary will generally be less flexible. The omission of space above ceilings generally produces the least flexible arrangement.

In single-storey buildings, accommodation for services may be needed below floor level, or above ceiling level, or both.

External ducts should be weather resistant. Underground ducts should be resistant to the entry of ground water and to chemical attack by the soil, and should be able to accommodate soil movement.

6.3 Interaction of duct layout with building design

The spaces required for services should be incorporated in the building design from the earliest sketches. If sufficient space is not allowed in the initial concept it can be extremely difficult to achieve a satisfactory solution in the completed project. Information on space allowances for ducts is given in clause **8**.

Close co-operation between the designers of the services and of the building is essential. Particular attention should be given to the design of service entry and exit points, to ensure that the building is not weakened and that services are protected from differential movement. It is sometimes necessary to make holes in load-bearing walls or floors for the passage of services, to resite beams or columns or to re-route services to avoid them.

Openings for services are weak points in the fire compartmentation of a building. Their number and size should be minimized, and close attention paid to their detail design.

Consideration should be given to routing of services to avoid escape routes, hazardous areas and clean areas.

The necessary precautions should be taken in design of the services to provide adequate control of noise transmission between different parts of the building. Suitable planning of the duct position may reduce noise transmission. Structural precautions to reduce transmission include adequate mass of the duct walls, the sealing of gaps to avoid transmission via air paths, adequately designed access panels, which should be kept to a minimum in size and number, and, if necessary, the introduction of barriers at floor levels in vertical ducts. See BS 8233.

6.4 Thermal insulation

Hot or cold pipes and air ducts should be insulated in accordance with BS 5422 and BS 5970. Barriers across the duct or thermal insulation of the duct walls may be necessary to prevent damage to the building or contents or discomfort to the occupants (see also **13.2.1**).

7 Restrictions on positioning and combination of services

7.1 General

7.1.1 The consequences of the failure of the services by themselves or in conjunction with other services should be considered and if this could introduce a hazard the services should be segregated.

NOTE. Where this standard recommends certain services to be accommodated in separate ducts and the separate ducts are adjacent, the division between the ducts should afford adequate separation and fire resistance consistent with the hazards involved.

7.1.2 Hazardous materials such as flammable, oxidizing, toxic or corrosive gases or liquids should only be run in ducts when there is no safe practical alternative.

Gas pipes may be run in ducts provided the recommendations of **7.2.3** are applied. Where other hazardous materials have to be in pipes in ducts, then the recommendations of **7.2.2** to **7.2.6** should apply.

7.1.3 Services not associated with lifts should not be run in lift wells.

7.1.4 Services should only be run in air ducts if the following points are taken fully into account at the design stage of the air ducts and the system of which they are part.

a) The consequences of gases, vapours or liquids escaping from piped services and being transported around the building should be considered. In no case should services carrying toxic or flammable substances be routed through air ducts.

b) Services within an air duct will increase its resistance to air flow and make it more difficult to clean the duct. Service penetrations through the duct wall may increase air leakage. Both of these factors may increase the duct size and, in the case of mechanical systems, the fan size and power required to achieve specified air flow rates at the terminals.

7.1.5 Cavities in walls and partitions should not be used as service ducts unless suitable for that purpose. Routing of flammable, oxidizing, toxic or corrosive services through such cavities in structural walls should be avoided where practicable, but, if necessary, special precautions should be taken. Some points that should be considered are as follows:

a) the requirements of the Gas Safety Regulations 1972 [9] and the Gas Safety (Installation and Use) Regulations 1994 [10];

b) services should take the shortest practical route through the cavity;

c) in the case of flammable, oxidizing, toxic and corrosive services, use of high integrity pipework, e.g. avoiding joints within the cavity, etc. and secondary sleeving as appropriate (see **13.5.7**d)3));

d) the dispersal of any leakage in the cavity;

e) provision of access for inspection and maintenance of the service within the cavity;

f) the effect on the fire resistance of the wall;

g) the effect on the acoustic integrity of the wall.

7.1.6 The effects of leakage of services and the effect of each service on neighbouring services should be considered. For example, water and other fluids can cause damage by corrosion and solvent action. Hot fluids can cause damage by overheating. A jet of fluid escaping from a pressurized service can cause damage by force of impact. The contents of some pipes may be poisonous or infectious. Pipes conveying gases that are heavier than air should be placed at the top of horizontal ducts and those conveying gases that are lighter than air should be placed at the bottom, so that escaping gas will be diluted as much as possible.

7.2 Restrictions for particular services

7.2.1 Hot water, steam and condensate pipes should be insulated to prevent excessive heat loss and high temperatures within the duct. Hot pipes should not be run adjacent to chilled water services, plastics drainage systems or electrical or telecommunications cables, regardless of insulation. Condensate pipes and screwed joints in steam and pressurized hot water pipes are particularly liable to corrosion.

Cold, drinking and chilled water pipes should be insulated to prevent condensation and/or a rise in water temperature. (See also **10.4**.)

NOTE. Pipes containing fire fighting water do not normally require insulation to prevent condensation, as the water is stationary.

Air ducts conveying clean air for ventilation, heating or air conditioning should be insulated, if necessary, to prevent condensation, a change in air temperature or extremes of temperature in the service duct.

Air ducts conveying polluted air from fume cupboards, industrial processes, etc. should be designed and sited after consideration of the particular hazards involved. They should be segregated from other services, if appropriate.

All extract ducts from fume cupboards should be under negative pressure where they run through buildings.

Air ducts serving parts of a building or appliances considered to be special risks should, where necessary, be independent of each other and of any air ducts serving other parts of the building. The possibility of fire in extract ducts from frying areas in kitchens should be considered.

Where practical, flue pipes should not be run in the same duct as other services. Where this is not practicable, they should be insulated to prevent excessive heat loss and high temperatures where these could present a hazard. Particular attention should be given to maintaining any fire separation.

Compressed air pipes do not normally present a hazard to other installations although leaking compressed air may cause injury to personnel.

Vacuum pipes do not normally present a hazard to other installations. Suitable precautions should be taken if they are run in the same duct as any service conveying flammable, oxidizing or corrosive substances.

Electrical installations should conform to BS 7671 : 1992. Telecommunications installations should be in accordance with BS 6701. In particular, the following precautions should be taken.

a) Cables, conduits, trunking and cable trays should be separated from pipes or other services by at least 25 mm, and more for large services. Alternatively, adjacent metallic surfaces should be electrically insulated.

b) Cables and accessories should be selected and installed such that under reasonably foreseeable fault conditions they will not create a hazard either alone or in conjunction with other services.

c) Installations should be protected from overheating.

d) Telecommunications installations should be protected from interference from electrical installations.

e) Discharge pipes and drains should be positioned considering the need for access for rodding and the likelihood of escape of liquid during this operation. In horizontal ducts they should, if possible, be positioned below all other services.

7.2.2 For the purposes of this standard, gas, vapour and liquid pipelines are classified into groups depending on the major risk associated with the pipeline contents:

a) Group 1: flammable. Flammable gases, e.g. natural gas, hydrogen, propane, and butane, flammable liquids, highly flammable liquids, and higher flash point liquids such as oils;

b) Group 2: oxidizing. For example, oxygen, nitrous oxide and oxygen mixtures;

c) Group 3: toxic or corrosive. For example, ammonia, chlorine and certain laboratory wastes.

d) Group 4: hot services, which may scald or burn. For example, steam, high temperature hot water (HTHW) and medium temperature hot water (MTHW) services.

e) Group 5: cryogenic and radioactive substances.

f) Group 6: other substances. For example, helium, argon, nitrogen and carbon dioxide gases, compressed air and water below 100 °C.

The examples included in the list are intended for guidance only; the list is not exhaustive. Adequate precautions should be taken to prevent asphyxiation of personnel in the duct. In confined spaces, air may be displaced by any gas. Except for oxygen and compressed air, any gas or vapour may cause asphyxiation. This has been a common cause of accidents and adequate precautions should be taken (see **14.1**).

Where the contents of a pipeline fall into more than one category, it should be classified according to the primary hazard likely to be encountered, but piping arrangements should have regard to all its properties.

The design, installation, operation and maintenance of pipelines should be appropriate to the pipeline contents.

Pipes should be so positioned or protected that they will not be subjected to any source of heat likely to cause overheating.

Services should be arranged so that any escape of the pipe contents cannot damage electrical insulation or equipment.

Special precautions should be taken where piped cryogenic and radioactive substances are proposed and should only be taken after specialist advice is obtained regarding materials, ducts, installation, marking and protective clothing for operatives. (For further information on cryogenic liquids see BS 5429.)

NOTE. **7.2.3** to **7.2.5** should be read in conjunction with each other. See **7.1.1** and **7.1.2**.

7.2.3 Pipes conveying town gas, natural gas and liquefied petroleum gases (LPG) should be installed in ducts according to the relevant requirements of BS 6891, and BS 5482: Part 1, the Liquefied Petroleum Gas Association (LPGA) Code of practice No. 22 [11] and the Institution of Gas Engineers (IGE) publications IGE/UP/2 [12] and IGE/TD/4 [13].

7.2.4 Pipes conveying flammable gases or flammable liquids (group 1) should only be run in ducts if the following precautions are taken.

a) Pipes should be of non combustible material with a melting point not lower than 800 °C but should not be of asbestos cement.

b) Ducts should be well ventilated (see clause **12**) or, by some other suitable means, it should be ensured that a hazardous atmosphere cannot develop within the duct (see **12.3**).

c) Flammable gases and liquids may be run in ducts reserved solely for that purpose or in ducts containing other flammable gases or liquids, cold water or group 4 substances but should not be run in the same duct as any other service(s) unless adequate precautions are taken to ensure that the combined installation is safe and that it does not contravene any Regulations or other codes of practice.

d) Pipes conveying liquefied flammable gases should not be run in ducts unless the duct is filled with a crushed inert infill to reduce to a minimum the volume of any gas emission which may accumulate. The infill material should be dry, non absorbent, chemically neutral and non combustible, e.g. crushed slate chippings or dry washed sand.

7.2.5 Pipes conveying oxidizing gases (group 2) should only be run in ducts if the following precautions are taken.

a) Pipes should be of non combustible material with a melting point not lower than 800 °C but should not be of asbestos cement.

b) Ducts should be well ventilated (see clause **12**). Where ventilation is impractical, adequate precautions should be taken to ensure that it is not reasonably foreseeable that a hazardous atmosphere will develop within the duct (see **12.3**).

c) Pipes conveying liquefied oxidizing gases should not be run in ducts unless the duct is filled with a crushed inert infill to reduce to a minimum the volume of any gas emission which may accumulate. The infill material should be dry, non absorbent, chemically neutral and non combustible, e.g. crushed slate chippings or dry washed sand.

d) Pipes carrying oxidizing gases should not be exposed to any leakage of incompatible materials, e.g. from oil or flammable liquid lines (see **7.2.4**c)).

7.2.6 Pipes conveying corrosive or toxic liquids or gases (group 3) should only be run in ducts if the following precautions are taken.

a) Ducts should be well ventilated or, by some other suitable means, it should be ensured that a hazardous atmosphere cannot develop within the duct (see **12.3**). The provision of ventilation should take into account the toxic properties of the substance(s) involved. Reliance should not be placed solely upon fixed gas detectors for the monitoring of the atmosphere.

b) Services should be arranged so that escaped corrosive liquid or gas will not damage other services.

c) Corrosive or toxic substances should not be run in the same ducts as air ducts unless suitable precautions are taken to ensure that dangerous substances cannot be transmitted through the ventilation system.

7.2.7 Pipes covering refrigerants should conform to BS 4434. Pipes conveying flammable, oxidizing, toxic or corrosive refrigerants should, in addition, be in accordance with **7.2.2** to **7.2.6**, as appropriate.

7.2.8 Pressurized pneumatic pipelines for conveying flammable dusts or powders should not be run in ducts. Where this is unavoidable, the severe risk of fire and the consequence of a leakage should be taken into account.

8 Space requirements

8.1 Space allowances for ducts at the outline design stage

8.1.1 *Space for air ducts*

The installation space required for supply air ducts for low velocity systems can be estimated by dividing the required air volume flow rate by a velocity of 4 m/s. Return air ducts will normally require as much space as supply air ducts.

8.1.2 *Vertical ducts for piped and electrical services*

The installation space required for vertical ducts for piped and electrical services on each floor of a multi-storey building is usually between 1 m^2 and 2 m^2 for each 5000 m^3 of building volume.

8.1.3 *Space for additions and alterations*

Between 10 % and 15 % extra space should normally be allowed for future additions and alterations.

8.1.4 *Depth of ceiling voids*

Ceiling voids should have a minimum depth of 500 mm free of structural members. To avoid excessively deep ceiling voids and to ease balancing of systems, each vertical service duct should serve a maximum area of about 1000 m^2.

8.2 Installation

Sufficient space should be provided for services to be installed without difficulty. Designs that require services to be installed in a particular order should be avoided as far as possible. The installation space and its relationship with outlets should be agreed for each service.

The minimum distance between the outer surface of any service or insulation and any obstruction should be as follows:

- 25 mm for pipes;
- 25 mm for cables;
- 75 mm for union joints;
- 100 mm for ducts.

NOTE. More detailed information on the installation space for air ducts is given in annexes A and B.

8.3 Maintenance

8.3.1 Sufficient space should be provided for the operation, inspection and repair of valves, dampers, cleaning points, expansion joints and other fittings, and the cleaning and painting, if applicable, of the inside of the duct and the services within it.

Additional spacing will be needed for access for tools and work on pipes and ducts. This may be in excess of 250 mm for a typical spanner.

8.3.2 Careful consideration should be given to what degree of demolition of the duct and disruption of other services will be acceptable when a service is to be maintained or modified. Services should preferably be arranged so that it is possible to remove one without disturbing the others.

8.4 Future requirements

Adequate space should be provided initially to allow for the renewal of services. Most building structures can be expected to last much longer than the services.

8.5 Critical points

The size of a duct is usually determined by space requirements at critical points such as changes of direction, branches or crossings rather than on straight runs.

8.6 Flanges and insulation

The size of a pipe or air duct including connections and/or insulation can be much greater than its nominal size.

8.7 Separation of services

Extra space may need to be allowed for separation of incompatible services (see clause **7**).

8.8 Modular co-ordination

If a modular system of dimensional co-ordination is being used for the project, the service ducts and their contents should be dimensioned and positioned within this system.

9 Access

NOTE. See also annex C.

9.1 Frequency of access

It is essential that adequate access is provided to ducts large enough to be entered (see **13.4**).

It may be desirable to provide more frequent access openings to aid the operation, maintenance and replacement of the services.

Access to other ducts should be provided so that all operational items such as valves, dampers, cleaning doors and switches may be readily used.

Access should preferably be provided to all joints and other fittings that may require maintenance. However, it may be more economic to destroy finishes to open up a duct than to provide expensive, rarely-used access panels.

9.2 Sizes and positions of access openings

Access openings to ducts large enough to be entered should have the following minimum sizes, as shown in figure 1.

a) Horizontal ducts should be either:

1) 600 mm wide × 900 mm wide or long; or

2) 600 mm wide × 600 m high.

b) Vertical ducts should be either:

1) 600 mm wide × 1800 mm high; or

2) 600 mm wide × 1400 mm high minimum.

Larger access openings are desirable, and are necessary if space inside or outside the duct is restricted or if persons wearing breathing apparatus will need to enter the duct.

Access openings to other ducts should be sufficiently large to enable the services within the duct to be operated and maintained. (see also **13.4**).

The position of the access and height of the threshold should be consistent with safe and convenient use.

9.3 Installation and removal of services

It may be desirable for access openings to be large enough and suitably placed to enable services to be installed and removed with ease.

9.4 Space with ducts

If it is necessary for a person to enter a duct to operate or maintain any service, ventilator, drain or other feature, no dimension of the working space provided within the duct should be less than the following:

a) horizontal ducts: width 700 mm, height 1000 mm, volume 1.4 m^3;

b) vertical ducts: width 600 mm, depth 750 mm, volume 0.9 m^3.

The working space should be unobstructed by any services, insulation, ladders or other features. In the case of vertical ducts with fixed ladders, the width is measured in the plane of the ladder and the depth at right angles to it.

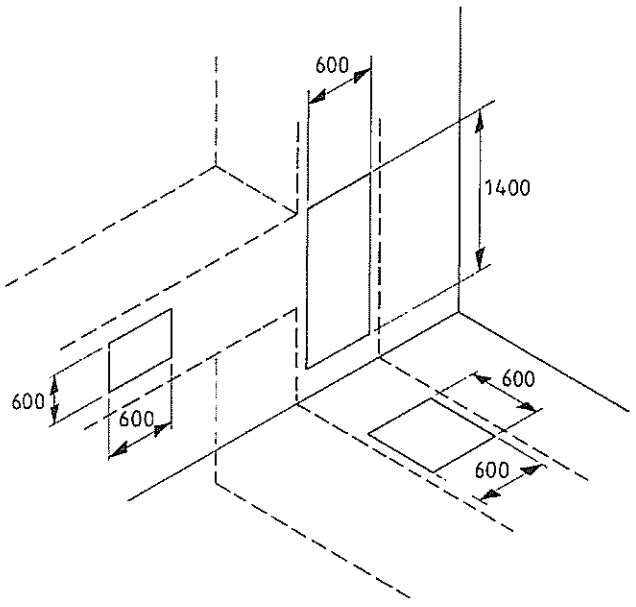

All dimensions are in millimetres.

Figure 1. Minimum sizes of access openings for passage by persons

9.5 Anthropometric data

Suggested anthropometric data on space requirements and reach distances for men in various positions are shown in figure 2.

9.6 Construction of access doors and covers

Doors and covers should be strong enough to carry any loads or traffic which they may reasonably have to bear. Covers should have adequate lifting facilities.

Each door or cover should be light enough to be opened by one person or by two at the most, or other suitable provision should be made.

Doors and covers should be well fitting. If a duct conveys hot or cold services, it may be desirable to insulate doors and covers, to prevent discomfort to people or damage to materials or finishes outside the duct by conduction or air leakage.

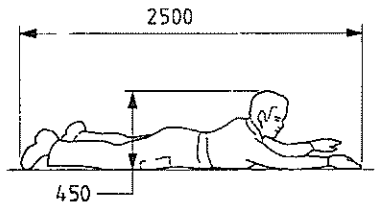

a) Prone

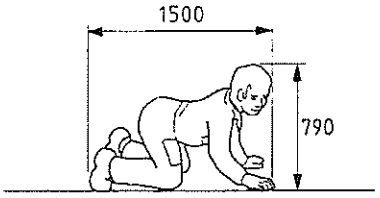

c) Crawl

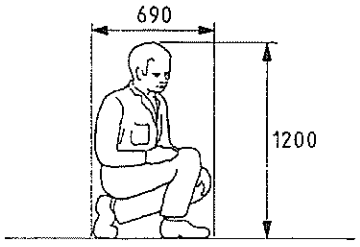

d) Squat

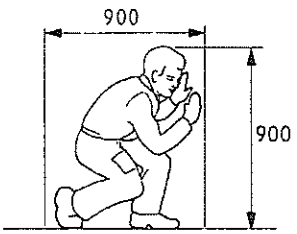

e) Stoop

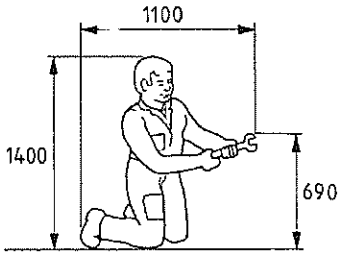

b) Kneel

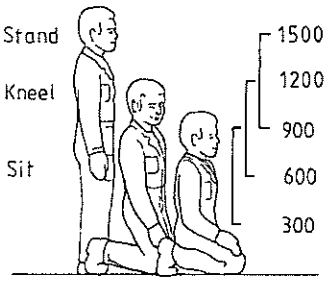

f) Maintenance reach levels

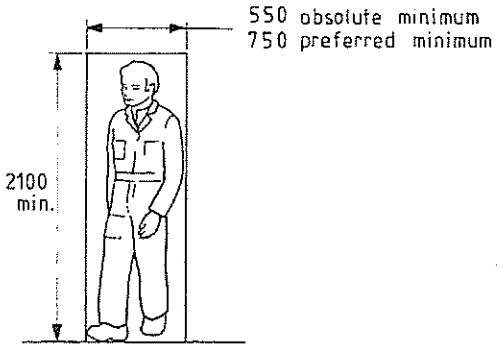

g) Passageway

All dimensions are in millimetres.

Figure 2. Anthropometric data

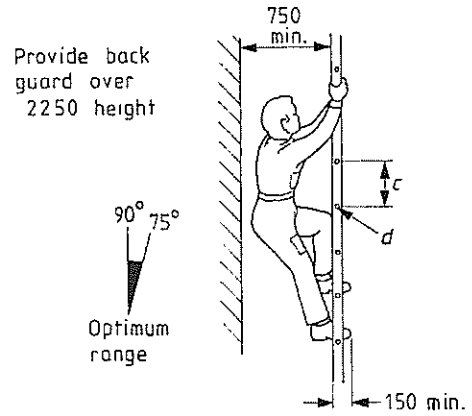

Ladder width 380 min. 450 optimum
Distance between side walls 600 min.
Rung distance *c* 225 to 250
Rung diameter *d* 20 to 40
(h) Ladder

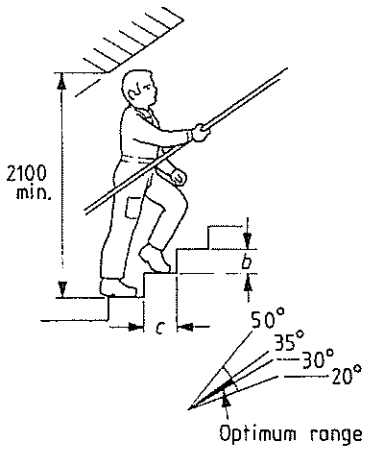

Width for one man 600 to 750
Width for two men 1100 min.
Riser *b* 184 optimum
Tread *c* 240
(i) Steps

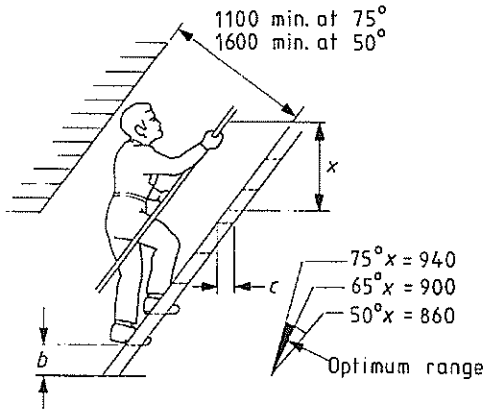

Width 530 to 600 with handrails
600 min. between side walls
Riser *b* 250 maximum
Tread width *c* 80 to 150
(j) Inclined ladder

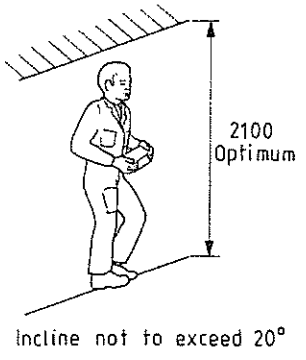

Width 750 min. to 1100 optimum
(k) Ramp

All dimensions are in millimetres.

Figure 2. Anthropometric data *(concluded)*

Doors and covers should be hinged or completely removable. Sliding doors should not be used. All doors should open outwards from the duct interior. Hinged hatch covers in floors should open through 180 ° or be provided with a self-locking device to hold the hatch open. Doors of ducts that are large enough to be entered should be openable from the inside of the duct.

Heavy trench covers do not usually require securing. Other access covers and doors should preferably be secured by budget locks (see **3.16**).

Continuous trench covers generally require individual adjustment during installation to ensure accurate alignment of the surfaces with adjacent floor surfaces and to eliminate any tendency to rock upon the bearing points. It is, therefore important that individual sections of trench covers be numbered or marked to ensure that they are placed in correct sequence.

9.7 Security

Special procedures or devices controlling the use of doors and access covers may be needed, particularly if a hazard may arise from unauthorized use.

10 Protection of services in ducts

10.1 Mechanical damage

Services should be protected from accidental and malicious damage by suitable positioning or enclosure.

10.2 Condensation

Condensation should be prevented by suitable choice of insulation, ventilation and heating.

10.3 Corrosion

Corrosion should be minimized by choice of suitable materials and combinations of materials, by keeping ducts and services dry and by application of suitable paint or other protective coatings. Relevant information is given in BS 5493 and PD 6484.

10.4 Frost

Services liable to frost damage should be positioned in frost-free places where possible. If this is not possible, they should be protected by insulation and/or heating. The latter should be thermostatically controlled. Particular care should be taken when water services are run in ventilated ducts.

10.5 Thermal expansion

Provision should be made for thermal expansion of services without imposing excessive loads on the structure, fixings or services.

10.6 Differential movement

It is common for services to have to accommodate differential movement, particularly, but not only, at service entry and exit points. Services should therefore be designed so that they can accommodate the expected movement without damage. Advice on how much movement can occur may need to be sought.

10.7 Provision of adequate support

In selecting the method of supporting services, provision should be made for the overall dimensions of the services where these are to be thermally insulated, and for the preservation of any moisture-proof layer.

Typical fixings and supports are specified in BS 3974 and BS 5572.

11 Drainage of service ducts

11.1 General

Drainage should be provided in ducts to dispose of liquids from leakage or infiltration.

Special consideration should be given to the drainage of flammable, toxic or corrosive liquids.

11.2 Discharge to building drainage system, etc.

Drains from ducts should discharge to the building drainage system, a soakaway or watercourse, etc., if this is acceptable to the water authority. If sufficient fall is not available, a sump with an automatic pump and high level alarm should be provided. A warning pipe or other suitable means should be provided. A warning pipe or other suitable means should indicate that liquid has escaped within or has entered the duct. Precautions should be taken to maintain trap seals to prevent the entry of rodents, for instance by connecting the discharge from a sanitary appliance to the trap. Precautions should also be taken against back flow drains into underground ducts.

11.3 Collection in holding tank

If the water authority does not accept discharge to the building drainage system, etc., drains from ducts should discharge to a holding tank. The capacity of the tank should be chosen in relation to the amount of liquid likely to escape from a failed service. Provision should be made for emptying the holding tank to a disposal contractor's vehicle or other suitable recipient. An alarm should indicate that liquid has entered the tank, so that the cause can be established and remedied.

11.4 Retention within the duct

If there is a significant probability of a liquid service leaking and causing damage but it is impractical to provide drainage, the duct should be made watertight and arrangements made for removing and disposing of liquid retained in the duct after a leak. An alarm should indicate that there is liquid in the duct, so that the cause can be established and remedied.

11.5 Watertightness

Ducts below ground level which may be subject to external water pressure should be watertight. (See CP 102.)

12 Ventilation of service ducts

12.1 General

It is recommended that building service ducts should be ventilated regardless of the services they contain.

Ventilation for persons within ducts is covered in **12.2**, for the control of hazardous leaks in **12.3**, and for the control of environmental effects, e.g. condensation or overheating in **12.4**. Satisfying the single largest requirement should be satisfactory in all cases.

The provision for ventilation should be so designed as not to decrease the fire safety of the building.

Ventilation openings provided in accordance with **12.1** to **12.4** should, where necessary, because a fire resisting division is passed, be fitted with devices, e.g. fire resisting doors or dampers, that will close automatically in case of fire. Consideration should be given to the provision of indicators to show whether the device is open or closed.

NOTE. Ducts with a cross-sectional area of less than 0.05 m^2 which convey only services in the following list need not be ventilated other than as required in **12.2** or to prevent overheating:

a) ventilation, air conditioning, warm air heating;
b) drainage in houses, offices and shops, except food shops;
c) electric power and telecommunications;
d) substances of groups 4 and 6 (see **7.2.2**);
e) vacuum pipelines.

12.2 Ventilation for persons

Work carried out in confined spaces is potentially hazardous and guidance on the precautions to be taken is given in annex C.

Ventilation for persons within ducts may be achieved either by permanent means or by providing ventilation prior to and during occupation.

The ventilation applied should be capable of providing respirable air for persons whilst working. In some instances additional air may be required to cater for the work being undertaken, e.g. removal of heat or dilution of welding fumes.

BS 5925 provides information on the quantities of air required. (See also Health and Safety Executive Guidance Note EH22 [14].)

12.3 Safety ventilation

12.3.1 Ventilation should be provided to dilute any anticipated or reasonably foreseeable leakages of flammable, toxic or corrosive gases to a safe level.

Advice on occupational exposure limits of airborne substances hazardous to health is available in Health and Safety Executive Guidance Note EH40 [15].

For flammable gases or vapours small leaks should be diluted below 25 % of the lower flammable limit (sometimes referred to as LFL or LEL). Where it is not reasonably practicable to satisfy the above, see **12.3.4**.

Where oxidizing gases are being distributed, the ventilation air requirement should be such as to limit the concentration of the leaked oxidizing gas in air to less than 1 % by volume.

Natural ventilation is preferred.

Pockets in roofs or floors where lighter-than-air or heavier-than-air gases respectively may accumulate should be avoided.

The ventilation rates should be based upon the sensitivity of pressure testing and maintenance procedures applied for each service.

NOTE 1. The minimum areas for natural ventilation shown in table 1 should be more than adequate for most applications.

NOTE 2. Builder's ducts having a small cross-sectional area and volume (i.e. 10 000 mm^2 or less and 0.1 m^3 or less respectively) may not need the provision of ventilation to the full requirements of table 1 where the duct is contained within one compartment and that compartment has adequate ventilation. Some ventilation between the duct and the compartment may, however, be required for dispersion of leaks or to limit temperatures (see **12.3.2**).

NOTE 3. It is generally not considered necessary to provide ventilation in some small internal structures (e.g. partition walls or ceiling spaces) where medical piped services are installed of all-welded, brazed or joint-free construction. In such cases the system should be subjected to rigorous soundness testing procedures. Guidance for soundness testing of such services in hospitals is given in Department of Health Technical Reports HTR 2022 [16] and HTR 2023 [17].

Table 1. Free area of ventilation opening for dispersal of small leaks

Cross-sectional area of duct m^2	Minimum free area of each opening
Not more than 0.05	Cross-sectional area of duct
More than 0.05 but not more than 7.5	0.05 m^2
More than 7.5	1/150th of area of duct

12.3.2 Duct ventilation openings should lead to safe places, preferably the open air. Ducts contained solely within a room or an occupied space and not containing group 3 services may be ventilated within that room provided that the room is ventilated (see also **12.3.3**).

The free area of such ventilation openings and the distance between them should be based on consideration of the relevant factors which affect air movement, including the location, size and configuration of the duct, on the physical properties including the relative density of the gases or vapours involved on factors influencing the potential magnitude of any leakages.

Ventilation openings should be located such that air movement can occur within the duct, e.g. at the top and bottom or at each end, and at intervals along long horizontal ducts.

In general, the larger the interval between openings in horizontal ducts, the greater is the need for a vertical component to the duct at one end to generate air movement.

12.3.3 Where there are openings in false or suspended ceilings or floors through which air can pass between the room and the service space, these may be counted as part of the open area required for ventilation of the service space as long as they are unlikely to be blocked.

The equivalent minimum free area of these openings should be calculated from laboratory tests or data provided by the ceiling or flooring manufacturer based on a 1 Pa pressure differential across it.

12.3.4 Where it is impracticable to ventilate a duct that conveys flammable or oxidizing gases, flammable liquids or toxic substances, alternative precautions should be taken.

Suggested methods are as follows.

a) The pipe(s) conveying the gas or liquids should be continuously sleeved through the unventilated duct with the sleeve ventilated at one or both ends into a ventilated area or room or duct;

b) The unventilated duct should be filled with a crushed inert infill to reduce to a minimum the volume of any gas or liquid that may accumulate. The infill material should be dry, non absorbent, chemically neutral and non combustible, e.g. crushed slate chippings or dry washed sand.

NOTE. See note 3 of **12.3.1** for medical services.

12.4 Ventilation for overheating or condensation

In some circumstances ventilation of ducts may be necessary to prevent overheating or condensation. Wherever possible natural ventilation should be used.

13 Fire precautions

13.1 The objects of fire precautions

13.1.1 The objects of fire precautions are:

a) to prevent the occurrence of fire;

b) to detect a fire in its early stages;

c) to provide means of escape for the occupants;

d) to prevent the spread of fire and smoke;

e) to extinguish the fire.

13.1.2 Unless suitable precautions are taken, service ducts may be:

a) a place where fire starts;

b) a place where fire grows undetected;

c) a place where persons become trapped;

d) a route for the spread of fire and smoke;

e) a place where fire is difficult to extinguish.

13.2 Prevention of fire

13.2.1 The location and construction of services and ducts within buildings should take into account the fire hazards to the services from fires which can occur in the building or in the duct, and the hazards to the building from a major failure of the services. In some special cases it may be necessary to provide liquid or gas monitoring or explosion reliefs within the duct.

13.2.2 If combustible materials are considered for use within or as part of a service duct, the extent to which they will increase the fire loading, the necessary provision of cavity barriers and the production of smoke and toxic gases should be carefully assessed. Careful consideration should be given to the potential fire and smoke hazard inherent in combustible insulation. (See BS 5422 and BS 5970.)

13.2.3 Ducts to which access is provided should be designed to be cleanable (see **19.3**). Accumulations of rubbish, dust or grease can easily be ignited. Particular care should be taken that insulation does not become contaminated by flammable liquids. (See BS 5422 and BS 5970.)

13.2.4 Sources of ignition should be avoided where possible. Smoking should be prohibited in service ducts. Suitable precautions should be taken when operations involving heat, such as soldering and welding, are to be carried out inside ducts (see Health and Safety Executive Guidance Notes EH 54 [18] and EH 55 [19]. In high fire risk areas, sparks from power or hand tools are dangerous. Heat should not be applied to pipes or plant that has contained flammable substances unless it is safe to do so (see also **19.2**).

Consideration should be given to the provision of ample separation between flammable piped services and electrical equipment. Where this is not practicable, the construction of the piped service should be joint free in the vicinity of the electrical equipment or consideration should be given to the need for the application of explosion proof equipment (see BS 5345 : Part 1 and Part 2, BS EN 50014 and the British Approvals Service for Electrical Equipment in Flammable Atmospheres (BASEEFA) list [20] published by the Health and Safety Executive.

13.2.5 Vertical ducts conveying power cables should be provided with internal barriers as required by BS 7671 or adequate ventilation should be provided to prevent overheating of cables throughout their length.

13.2.6 If flammable or oxidizing services are to be installed in a ceiling void or floor void, either the services should be enclosed in separate duct(s) or pipe sleeve(s) within the void, or the void should be considered as a duct and the necessary ventilation provided.

If group 1, 2 or 3 services are to be installed in a ceiling or floor void they should be enclosed in a duct which is ventilated to a safe position.

If the services are enclosed in a separate duct or pipe sleeve within the void, the duct(s) or pipe sleeve(s) should be sealed from the void and should be in accordance with this standard. If the services are not enclosed within a separate duct or pipe sleeve within the void, the void should be considered to be a service duct.

13.2.7 The following factors should be carefully considered when locating services in a separate duct within a void:

a) ventilation of the void;

b) provision of cavity barriers;

c) access to services.

13.3 Detection and alarm of fire

13.3.1 Where ducts are large enough for passage of persons, provision should be made for giving alarm of fire.

13.3.2 If the building has a fire alarm system, the alarm sounders should be audible within such ducts and manual call points should be situated inside, and adjacent to, each exit from the duct.

13.3.3 If the building has a fire detection system, consideration should be given to such system being extended into service ducts of whatever size.

13.3.4 Any fire alarm or fire detection and alarm system should be in accordance with BS 5839 : Part 1.

13.4 Means of escape

13.4.1 It is essential that adequate provision for means of escape in case of fire is provided from ducts that are large enough for passage of persons. In this connection, consideration should not only be given to the need to escape from any duct in which fire has broken out but also so prevent anyone within a duct being trapped by the outbreak of fire elsewhere in the building.

13.4.2 Exits should be provided in such a number, and be so sited, that any person confronted by an outbreak of fire within the duct, or trapped by fire external to the duct, can make a safe escape. Where any duct (or section) is provided with two or more exits, such exits (unless affording access direct to the external air) should deliver to independent alternative escape routes from the building.

13.4.3 All doors affording escape from and within ducts should open in the direction of escape and should be fitted only with simple fastenings that can be operated from the escape side of the door without the use of a key. However, provision may need to be made to prevent unauthorized entry into the duct.

13.4.4 Doors and openings into and within ducts large enough for the passage of persons should be of such a size as to allow personnel to move through without difficulty. Consideration should also be given to their being large enough to permit the removal of an unconscious person and for their use by anyone wearing breathing apparatus.

13.4.5 All exits should be clearly identified with signs in accordance with BS 5499 : Part 1.

13.4.6 In intricate or extensive ducting, consideration should be given to the provision of the following:

a) artificial lighting;

b) escape lighting in accordance with BS 5266: Part 1;

c) telephones at suitable positions to enable persons trapped to summon help.

13.5 Prevention of spread of fire and smoke

13.5.1 Service ducts and their contents should be designed, constructed and maintained so that they do not impair the building's resistance to fire.

13.5.2 Where a service duct passes from one compartment to another, or through any other fire resisting division in a building, the fire separation should be maintained by:

a) constructing the duct so that it has the fire resistance recommended in **13.5.4**; or

b) continuing the fire resisting division across the duct; or

c) a combination of a) and b).

13.5.3 Where a service duct or pipe sleeve is contained within, or passes through, a protected escape route, adequate precautions should be taken to ensure the safety of the escape route, e.g. by the use of a fire resisting duct or the provision of cavity barriers and/or fire stopping.

13.5.4 A fire resisting duct or pipe sleeve should have a fire resistance at least equal to the highest standard required for any of the fire resisting divisions it crosses.

13.5.5 Any openings provided within the enclosures of fire resisting ducts or pipe sleeves should be kept to a minimum and fitted with doors or panels having not less than half the fire resistance required for the duct enclosure, with a minimum of 30 min integrity.

13.5.6 All fire doors should be fitted with a self-closing device (other than rising butt hinges). However, where not required as an exit, such doors or panels may be fitted with means to enable them to be kept locked shut when not in use in lieu of their being self-closing.

All fire doors should be marked, at eye level, with the appropriate fire safety sign in accordance with BS 5499 : Part 1.

13.5.7 Where any pipe penetrates a fire resisting division or enclosure it should either:

a) be contained within a duct having a fire resistance recommended in **13.5.4** (e.g. protected shaft); or

b) be protected by a sealing system which maintains the fire resistance of the element penetrated; or

c) have a nominal internal diameter not exceeding the relevant dimension given in connection with building regulations;

d) have nominal size which does not exceed 300 mm, and:

1) should be of welded steel construction, with a wall thickness of not less than 6 mm;

2) should be constructed to accommodate such penetration; and

3) should be enclosed in a sleeve that is sealed to the structure and to the pipe in such a manner as not to reduce the fire resistance of the division.

13.5.8 Where a service passes through a fire resisting division or enclosure, and the service is not contained within a protected shaft, see **13.5.7**a), any opening for the service should be kept as small as possible and should be fire stopped.

13.5.9 Any insulation to services should not penetrate a fire resisting division or enclosure if this would impair the resistance to fire of the division or enclosure.

13.5.10 Where a duct is contained wholly within one fire compartment, it will not normally require a fire resisting enclosure since the possibility of fire spread to another fire compartment via the duct will not exist. There may be a considerable hazard where small areas of high fire risk such as kitchens or stores are included in the same fire compartment as sleeping accommodation. In these cases ducts are normally horizontal, and the risk is greater if they are at a high level where they may be subjected to the worst conditions of flame and heat from a fire. In such circumstances, consideration should be given to the duct enclosures, including any access or inspection panels in the high fire risk areas, being fire resisting.

A fire resisting suspended ceiling does not necessarily check the spread of fire from the room below to services within the ceiling void or service ducts connected to it.

13.5.11 Cavity barriers or fire stopping should be provided within any service duct not enclosed within fire resisting construction:

a) for vertical ducts, at every floor level. If the duct contains uPVC pipework the duct enclosures should resist smoke penetration;

b) for horizontal ducts, at approximately 8 m. intervals, where either:

1) the duct enclosures are not constructed of materials of limited combustibility; or

2) substantial amounts of combustible materials are contained within the duct, e.g. as thermal insulation.

Consideration should also be given to providing cavity barriers or fire stopping at every point where a duct passes the boundary of a room or corridor.

13.5.12 In long ducts provided with means of escape in accordance with **13.4**, provision should be made for preventing the unrestricted spread of fire and smoke between exits.

13.5.13 No means of access to service duct covered in **13.5.11** should be provided from:

a) a protected stairway affording the sole means of escape from a building or part of a building;

b) sleeping accommodation; or

c) a dwelling, if there is means of access to the same section of duct from an indoor space which is not part of that dwelling.

13.6 Fire fighting

13.6.1 Sufficient and suitable access should be provided to major ducts to enable the fire service to clear the ducts of smoke and to fight a fire inside them.

13.6.2 All doors, ground lights and ventilator shafts designed for fire brigade use should be clearly marked on the exterior as to their function, e.g. 'SMOKE OUTLET FROM SERVICE DUCT'.

The recommendations given in BS 5378 and BS 5499 should be followed.

13.6.3 Major service ducts and important features, such as ventilators and gas isolating valves should be shown on the drawings available to the fire service.

13.6.4 Portable fire extinguishers, hose reels, sprinklers and fire extinguishing gas systems should be provided in service ducts as appropriate.

Any total flooding or automatic fire extinguishers mounted in ducts should be in accordance with BS 5306 : Part 0, and BS 7273 : Part 2. Further information is given in Health and Safety Executive Guidance Note GS16 [21]. Particular attention should be paid to the safety of persons within service ducts.

14 Other safety precautions

14.1 General

The safety of the building and all occupants and maintenance personnel should be provided for during the design of service ducts and services.

The nature of the operations to be carried out within the ducts should be assessed in detail, in order to determine the facilities that operatives will need in order to work safely.

Special consideration should be given to the safety of personnel required to enter and work inside the ducts, taking into account those hazards likely to be encountered (see **19.2**) both during construction and use.

14.2 Hazards

As early as possible during the design of a duct, an assessment should be made of the possible dangers to personnel and to the building. Hazards may arise from the arrangement of the ducts or from the services inside them.

For example, personnel may need designed protection against flooding in some ducts, particularly those below ground level, and in such cases a means of drainage will be required. Where flooding is probable, adequate means of rapid escape should be provided for personnel.

Other hazards can be created by the effects of materials such as fluids which may possibly enter a duct. Apart from flooding, such dangers as fumes, explosion, bacteria, physical and chemical processes, including extremes of temperature, pressure and humidity are typical possibilities. These are not likely to be common hazards but if they are possible then expert advice should be obtained very early in the design stage in order to resolve the problems.

Attention is also drawn to the hazards associated with asbestos and the related legal controls, see **5.2**.

14.3 Duct interiors

Interiors of ducts should be simple and regular in shape and sudden changes in shape and floor levels should be avoided.

Pipelines or services within the ducts should be suitably insulated and protected to avoid endangering personnel. Step irons and handrails should not be in contact with hot pipes.

Unexpected obstructions or projections by the duct or by the services and equipment within should be limited by careful design and installation.

Services and equipment should be arranged neatly within ducts and should be readily accessible for maintenance.

14.4 Protection against falls

It may be necessary to take special precautions against the possibility of personnel falling within ducts.

No sudden drop should occur over the threshold of an entrance to a duct. If the floor level of the duct is below that of the floor outside, the level of the latter where possible should be continued through the threshold to give a platform of minimum dimensions 750 mm by 750 mm.

Where a platform cannot be provided, the entrance should be fitted with a guard rail and sill when a difference in levels occurs over the threshold. Access openings to under-floor ducts should be protected by temporary guard rails when open.

Platforms and staircases within ducts should be fitted with handrailing 1200 mm high with a midrail and toeboard, and an entrance to a stair or ladder from a platform should be fitted with a safety bar.

Suitable fixed ladders, stairs, steps or ramps should be provided in vertical ducts or where there is a change in floor level in a horizontal duct. Recommended dimensions for these can be found in the annexes.

Fixed ladders should conform to BS 4211. As an alternative to the provision of safety cages as specified in BS 4211, other suitable means of providing safety on ladders can be employed, e.g. suitable systems for use with safety belts, which help in the release of a person who has collapsed.

In vertical ducts, anchors for attaching the safety line of a harness should be provided on platforms and in the side of the duct at intervals of not more than 2 m. Anchors should conform to BS 5845, and safety belts or harnesses should conform to BS EN 354, BS EN 358, BS EN 361, BS EN 365 and BS 2830.

14.5 Electrical power

The provision of electrical power within ducts is not normally necessary, however, where needed it is important to consider the problems of high voltages and of trailing leads.

14.6 Lighting

A lighting installation should be provided within ducts large enough to be entered, particularly at access points.

Lights should be controlled by switches placed at a uniform height and at regular intervals. Switches should always be provided at access points.

Consideration should be given to the provisions of emergency lighting, which should be actuated automatically when the normal lighting fails, or at least to placing alternative lamps on two different circuits.

Explosion protected or waterproof fittings and switches should be used where appropriate (See BS 5345 : Parts 1 and 2.)

14.7 Equipotential bonding

All simultaneously accessible extraneous and/or exposed conductive parts should meet the requirements of BS 7671.

14.8 Alarm systems

Suitable alarm systems should be provided if the recommendations of clause **13** do not ensure safety.

14.9 Means of escape

Suitable means of escape should be provided if the recommendations of clause **13** do not ensure safety.

15 Service entries and exits

15.1 The following general principles should be observed in the design of service entries and exits.

a) The service should be supported in such a way that differential movement is accommodated or prevented;

b) The building and its foundations should not be weakened;

c) The service should be sleeved where it passes through the building structure;

d) The space between the service and the sleeve should be sealed at the point of entry with a non hardening plastic material to prevent the passage of water, gas and vermin. (See BS 6213.) Consideration may be given to using cable glands or cable transits as an alternative, where applicable;

e) The service should pass through or under the building structure by the shortest practical route.

15.2 The design of service entries and exits should be agreed with the utilities as early as possible.

Advice on the design of service entries and exits can be found in the following publications:

a) gas pipes: IGE publication IGE/UP/2 [12];

b) telephone, telegraph and data communication: BS 6701;

c) water supply: BS 6700.

16 Identification and marking

16.1 Marking of ducts

16.1.1 *Marking of duct entrances*

Access doors and panels should be marked with pre-entry precautions, e.g. work permits.

16.1.2 *Diagram of duct system*

If a duct system is complex and ducts are large enough to be entered, a diagram of the system should be fixed to the inside of the duct at each access point. The diagram should carry a 'you are here' indication. The contents of each duct should be indicated.

16.1.3 *Emergency notices*

In ducts large enough for persons to enter, it is essential to provide, at suitable locations, concise actions to be taken in the event of an emergency arising within the duct.

16.2 Marking of services in ducts

Consideration should be given to marking services at appropriate points including the direction of flow. Where confusion could lead to a hazard, services should be appropriately marked.

Valves, dampers, switches and other controls should be clearly marked to indicate what service or function they control.

Some services need to be marked to conform to statutory requirements.

The recommendations of BS 1710 and the Heating and Ventilating Contractors' Association's DW 142 should be followed [22].

16.3 Marking of other features

It is essential that sufficient and suitable marking is provided for persons inside the duct to easily find escape routes, exits, alarms, telephones, light switches, etc.

The recommendations of BS 5378 and BS 5499 : Parts 1, 2 and 3 should be followed.

17 Duct construction

17.1 General

Prefabrication and pre-assembly in factory conditions of components and assemblies can offer significant advantages of speedier erection on site, improved quality and lower cost.

For large projects, the production of specially designed items off site may be worthwhile.

17.2 Workmanship

Service ducts are often expected not merely to hide services from view, but to support them, withstand expansion forces, contain leakages of liquids or gases, resist the spread of fire and many other functions. A good standard of workmanship is essential if they are to be able to fulfil these objectives.

Joints and seals in both ducts and services are weak points whose number should be minimized and to which particular attention should be given.

For site work, consideration should be given to the setting up of a workshop on site where components and assemblies can be formed and fabricated more easily than in a duct.

17.3 Sequence of work

As space in ducts is usually limited, careful consideration should be given to the order in which the ducts and their contents are to be erected to ensure that all trades have the necessary access and that earlier work is not likely to be damaged by following trades.

17.4 Holes

Attention should be paid to minimizing the number of holes in the duct enclosure.

Holes should not be cut through structural members without the approval of the structural engineer.

Where a service passes through a wall or other construction, a neat hole should be provided for the passage of the service. The hole should be as small as reasonably practical.

Where a close-fitting hole for the passage of a service is cut through a construction less than 25 mm thick or through a solid construction of a strong material and vibration and movement are expected to be small, the service need not be sleeved but should have wall plates. In other cases the service should be sleeved and the construction made good to the sleeve[1)].

The hole around a service should be sealed to prevent the passage of dirt, insects, water, gases, and sound, etc. Suitable materials for filling the hole should be selected with reference to BS 6213.

Services passing through fire resisting constructions should maintain the required fire resistance (see **13.5.8**).

It is permissible for several services to pass through the same hole if satisfactory support, sealing and fire stopping can be achieved.

There should be no joints, other than welded joints, in services where they pass through constructions.

[1)] Under The Gas Safety (Installation and Use) Regulations 1994.

17.5 Cleaning

Particular attention should be paid to cleaning during and after construction, as service ducts make a convenient rubbish dump.

17.6 Fire safety

All reasonable precautions should be taken to avoid the outbreak of fire. Work involving the use of naked flames is particularly hazardous and all such work should be examined at short intervals inunediately following its cessation. It is essential that the contractor impresses on his workmen the dangers involved in the careless use of naked flames in proximity to combustible material, the disposal of matches and cigarettes etc. and the accumulation of rubbish on site. A portable fire extinguisher should be readily available. (See BS 5306: Part 0).

18 Inspection and testing

18.1 Inspection should be maintained throughout the period of construction, to ensure that work has been done correctly and has not been subsequently damaged.

18.2 At completion, the cleaned ducts should be thoroughly inspected and tested. Some points that should be checked are listed below:

a) duct ventilators and any associated fire dampers;

b) duct drainage;

c) duct lighting;

d) alarms, telephones, etc.;

e) marking;

f) fit and lubrication of doors, hatchways, access panels;

g) fire extinguishing equipment;

h) acceptance certificates;

i) drawing showing location of isolators or isolating valves.

19 Maintenance

NOTE. See also BS 8210.

19.1 Operation and maintenance instructions

Operation and maintenance instructions should be supplied, containing complete sets of 'as-fitted' drawings and specifications, instruction manuals for equipment, etc.

19.2 Routine inspections and maintenance work

Accessible ducts and services should be inspected at regular intervals. Records of the inspections and of any work done should be kept and signed as part of a policy of planned maintenance.

Careful consideration should be given to any hazards involved in entry into and work within ducts. If any hazard is expected , the procedure set out in Health and Safety Executive Guidance Note GS5 [23] or the IGE publication IGE/SR/5 [24]should be followed.

Guidance on permits to work is also given in GS5 [23].

It is essential that appropriate safeguards be taken if there is any risk of exposure to asbestos, see **5.2.**

19.3 Cleaning and painting

Ducts that in normal use are liable to accumulate dust, grease or other flammable matter should be provided with access traps to facilitate inspection and cleaning. Ducts should not be used for storage purposes and flammable materials should not be allowed to accumulate, particularly through maintenance activities. Ducts should be cleaned as necessary.

The cleaning of a duct after any form of hazardous contamination is a job for specialists.

Regular inspection should be made for the detection of vermin and any necessary measures taken for disinfestation.

Consideration should be given to repainting ferrous pipe fixings and other iron work under a planned maintenance system for protection against corrosion where adverse site conditions are anticipated. For precautions in spraying of highly flammable liquid, reference should be made to Health and Safety Executive Guidance Note EH9 [25].

19.4 Fire safety

Before any works of maintenance are carried out, consideration should be given to the extent of any fire hazards involved, and the effect of any fire on the occupants or operation of the building. Appropriate precautionary measures should be taken where necessary, for example by temporarily relocating occupants who may be put at risk should a fire start. All reasonable precautions should be taken to avoid the outbreak of fire. Smoking should be prohibited in ducts and 'no smoking' rules applicable in other areas of the building should be observed by maintenance workers. It is essential that fire escape routes are kept unobstructed. A portable fire extinguisher should be readily available. See also **17.6.**

Annexes

Annex A (informative)
Installation space for air ducts (detailed method)

A.1 General

This annex gives a method for calculating the minimum cross-sectional dimensions of the installation space necessary for installation and maintenance of thin walled air ducts (wall thickness not exceeding 15 mm) for ventilation, heating and air conditioning of buildings.

NOTE. This method has been developed for computer programming.

Location of the installation spaces in a modular system and dimensional co-ordination of the external dimensions of any structure enclosing the installation space is not covered by the method. The designer should decide these, taking into account the functional requirements of the installation and the dimensions of the enclosing structure. Building tolerances should be taken into account, and co-ordinated dimensions selected to preserve the minimum installation space calculated using the method.

A.2 Field of application

The method is applicable to rectangular and circular air ducts exceeding 100 mm on the smallest side or 100 mm diameter. It relates only to simple runs of ducts and does not make allowance for fittings such as dampers, bellows, silencers, filters or test points.

Where the allowances given by this method for installation and removal of the air ducts are applied, part of the installation space may be used for other services or building components after the air ducts are installed, provided there is no future requirement to remove the air ducts, or the other services or components. The method is however not applicable to the design of installation spaces intended to include services other than air ducts.

A.3 Types of installation spaces for air ducts

A.3.1 The dimensions of an installation space are dependent upon the distances to firm obstacles and the characteristics of the installation space in which the services are to be installed.

A.3.2 Figure A.1 illustrates various types of installation.

Provided the appropriate installation space exists at all points on either side of the point where services penetrate a wall or floor, and there are no joints or supports to be installed within this penetration, it is permissible for the dimensions of the penetration to be less than the installation space for a firm obstacle on four sides. In this case, only a minimum clearance around the services need be provided.

Where the continuity of a firm obstacle on four sides exceeds 1 m, additional space for safety, drainage and access should be provided.

A.4 Symbols

A	Front dimension of installation space.
B	Side dimension of installation space.
a	Nominal size of the front face of air duct with rectangular cross section.
b	Nominal size of side face of air duct with rectangular cross section.
d	Nominal diameter of air duct with circular cross section.
e	Minimum access allowance for insulating an air duct in position.
e_1	e-value allowing access for hand, arm and tool(s) appropriate to method of insulation (minimum t + 100 mm).
e_2	e-value allowing access for whole body and tool(s) appropriate to method of insulation (minimum t + 300 mm).
e_3, etc.	e-values for other access requirements.
e_{a1}	e-value for face a_1 facing a firm obstacle.
e_{a2}	e-value for face a_2 facing a firm obstacle.
e_{b1}	e-value for face b_1 facing a firm obstacle.
e_{b2}	e-value for face b_2 facing a firm obstacle.
f	Minimum access allowance for jointing and supporting in position an air duct without insulation or pre-insulated.
f_1	f-value allowing access for hand, arm and tool(s) appropriate to method of jointing and supporting (minimum 100 mm).
f_2	f-value allowing access for whole body and tool(s) appropriate to method of jointing and supporting (minimum 300 mm).
f_3, etc.	f-values for other access requirements.
f_{a1}	f-value for the face a_1 facing a firm obstacle.
f_{a2}	f-value for the face a_2 facing a firm obstacle.
f_{b1}	f-value for the face b_1 facing a firm obstacle.
f_{b2}	f-value for the face b_2 facing a firm obstacle.
n	notional dimension for calculating space dimensions where obstacles exist close to ducts.
t	Flange or insulation thickness whichever is the greater.

NOTE. These symbols are used in figures A.2 to A.26.

A.5 Method of calculation

Formulae for determining the dimensions of installation spaces according to the different firm obstacles restrictions are given in **A.6**, for air ducts without insulation (see **A.6.1**), for those that are pre-insulated (see **A.6.2**) and for those that are insulated in position (see **A.6.3**).

For methods of jointing, supporting and insulating to be adopted, values for f_1, f_2, f_3, etc. (or e_1, e_2, e_3, etc.) are decided, as necessary, based on the ergonomic requirements of the methods and thickness of insulation, if any.

These values are then inserted for f and e in the formulae, the decision whether to use f_1, f_2, or f_3, (or e_1, e_2, or e_3) depending on whether the access is necessary for hand and arm only, for the whole body, or other requirements. This in turn depends on the dimensions of the air duct and the reach of the workman with the tools or materials required.

Care should be taken to provide sufficient access at any face from which it is necessary to reach an adjacent face.

In the case of air ducts insulated in position, the installation space should be calculated using the formulae for either f or e values, whichever gives the greater space requirement.

When a face of the air duct does not face a firm obstacle, a minimum notional space allowance of 100 mm or $t + 50$ mm, whichever is greater, should be provided which, together with the adjacent free space, gives space for a workman's whole body. A casing, which should be demountable for maintenance purposes, may be installed at the boundary of this notional space. The designer should preserve the adjacent free space.

The types of calculation of installation spaces for common methods of jointing, supporting and insulation are given in **A.7**, which also includes tables of dimensions for the installation spaces related to standard air duct dimensions.

A.6 Calculation of installation space dimensions for air ducts

A.6.1 Figures A.2 to A.5 illustrate calculations for jointing and supporting air ducts without insulation.

A.6.2 Figures A.6 to A.9 illustrate calculations for jointing and supporting pre-insulated air ducts.

A.6.3 Figures A.10 to A.13 illustrate calculations for insulation of an air duct in position.

A.6.4 For circular air ducts, d should be substituted for both a and b in the formulae given in figures A.2 to A.13.

A.7 Calculation of installation space dimensions for jointed air ducts both insulated and uninsulated

NOTE. Maximum whole arm reach is taken as 500 mm throughout.

A.7.1 Figure A.14 shows examples of installation spaces for flange jointed, uninsulated air ducts with firm obstacles on one or more sides. Appropriate values of f_1 and f_2 are given in figures A.15 to A.18. Minimum installation space dimensions A and B are given in figures A.15 to A.18 and tables A.1 to A.4.

A.7.2 Figure A.19 shows examples of installation spaces for slip jointed, uninsulated air ducts. Figure A.20 gives appropriate values of f_1 and f_2 and the minimum installation space dimensions A and B.

A.7.3 The values given in figures A.15 to A.18 and A.20 are applicable to rectangular air ducts of dimensions a and b, but can be used also for circular air ducts by using the A and B values where $a = b$ (indicated by a diagonal line). The shaded areas represent the recommended standard ventilation duct sizes given in Eurovent Document 2/3 [26].

A.7.4 Typical methods used for insulating air ducts in situ are as follows.

a) Method 1. Insulating with rigid slabs, for example resin bonded mineral wool, fastened by thin steel bands or the like. Without protective covering. (One operation.)

b) Method 2. Insulating with soft, flexible materials such as mats of mineral wool, with or without netting reinforcement and metallic facing, wrapped around the air duct and sewed or clipped in position. Without protective covering. (One operation.)

c) Method 3. Insulating as methods 1 or 2, but with protective covering, for example sheet-metal. (Two operations, first insulating, and then covering.)

A.7.5 Figure A.21 and tables A.5 and A.6 show examples of e-values for use in calculation of dimensions A and B for insulating flange jointed and slip jointed air ducts with firm obstacles on one or more sides of the duct. Appropriate e-values are given in figure A.22 and table A.7. Minimum installation space dimensions A and B are given in figures A.23 to A.26 and corresponding values of n are given in tables A.8 to A.11.

A.7.6 For air ducts pre-insulated externally, minimum installation space dimensions A and B are as given in figures A.15 to A.18 with $(2t - 100)$ added.

For air ducts pre-insulated internally, minimum installation space dimensions A and B are as given in figures A.15 to A.18, for flange joints, or as in figure A.20, for slip joints.

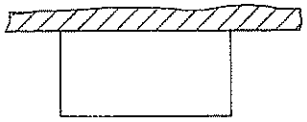

a) Installation space with firm obstacle on one side and free on three sides

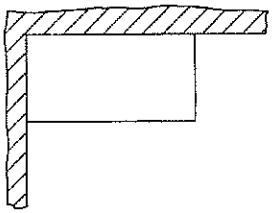

b) Installation space with firm obstacle on two sides and free on two sides

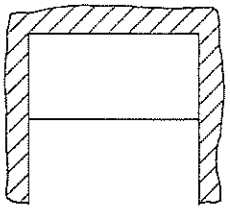

c) Installation space with firm obstacle on three sides and free on one side

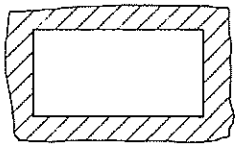

d) Installation space with firm obstacle on four sides

Figure A.1 Space with limitations due to firm obstacles

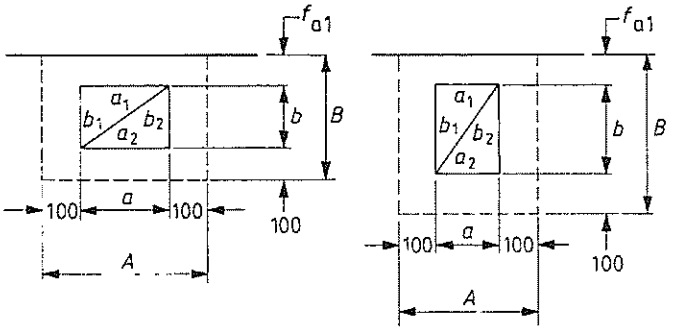

a) Situation 1: $a > b$

b) Situation 2: $a < b$

$A = a + 200$

$B = b + f_{a1} + 100$

All dimensions are in millimetres.

Figure A.2 Jointing and supporting air ducts without insulation and with a firm obstacle on one side

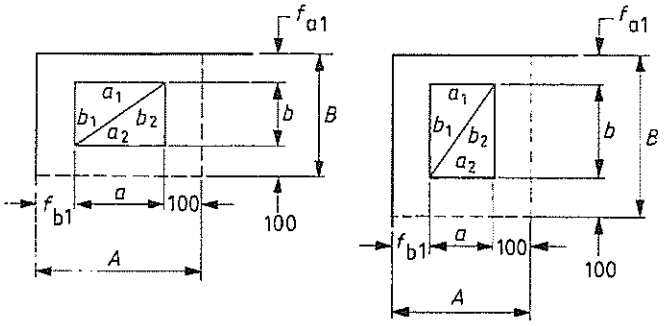

a) Situation 1: $a > b$ b) Situation 2: $a < b$

$A = a + f_{b1} + 100$
$B = b + f_{a1} + 100$

All dimensions are in millimetres.

Figure A.3 Jointing and supporting air ducts without insulation and with a firm obstacle on two sides

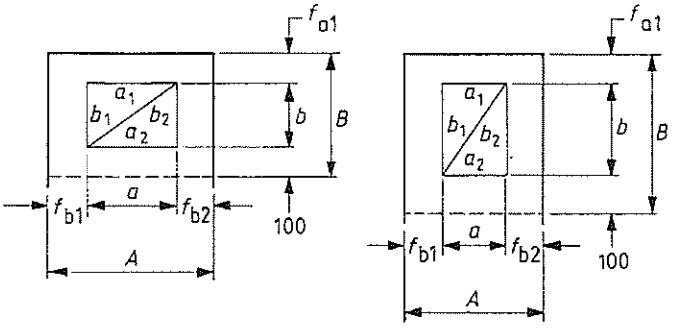

a) Situation 1: $a > b$ b) Situation 2: $a < b$

$A = a + f_{b1} + f_{b2}$
$B = b + f_{a1} + 100$

All dimensions are in millimetres.

Figure A.4 Jointing and supporting air ducts without insulation and with a firm obstacle on three sides

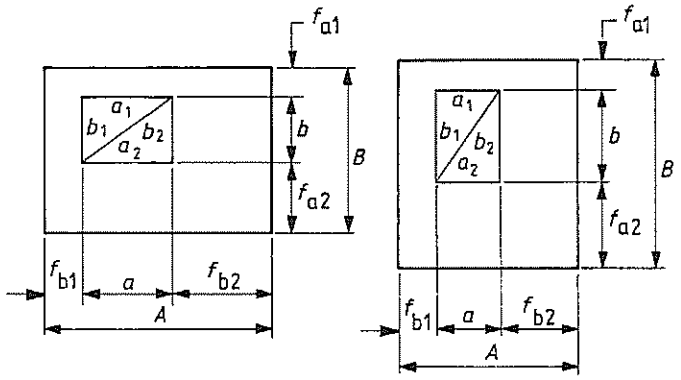

a) Situation 1: $a > b$ b) Situation 2: $a < b$

$A = a + f_{b1} + f_{b2}$
$B = b + f_{a1} + f_{a2}$

All dimensions are in millimetres.

Figure A.5 Jointing and supporting air ducts without insulation and with a firm obstacle on four sides (obstacle not continuous for more than 1 m)

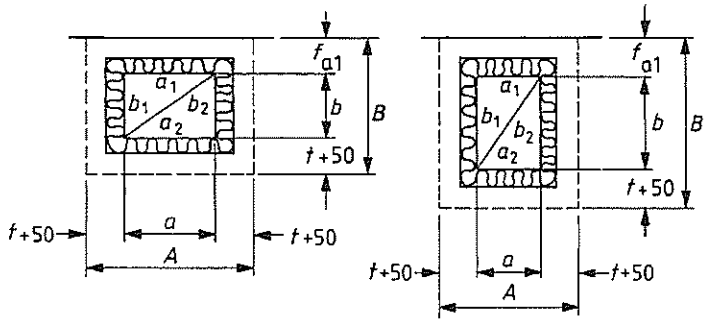

a) Situation 1: $a > b$ b) Situation 2: $a < b$

$A = a + 2\,(t + 50)$*
$B = b + f_{a1} + (t + 50)$*

All dimensions are in millimetres.

* If $(t + 50) < 100$, insert 100 (see A.5).

Figure A.6 Jointing and supporting pre-insulated air ducts with a firm obstacle on one side

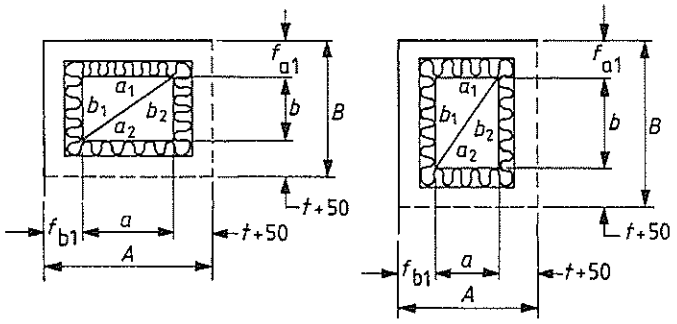

a) Situation 1: $a > b$ b) Situation 2: $a < b$

$A = a + f_{b1} + (t + 50)$*
$B = b + f_{a1} + (t + 50)$*

All dimensions are in millimetres.

* If $(t + 50) < 100$, insert 100 (see A.5).

Figure A.7 Jointing and supporting pre-insulated air ducts with a firm obstacle on two sides

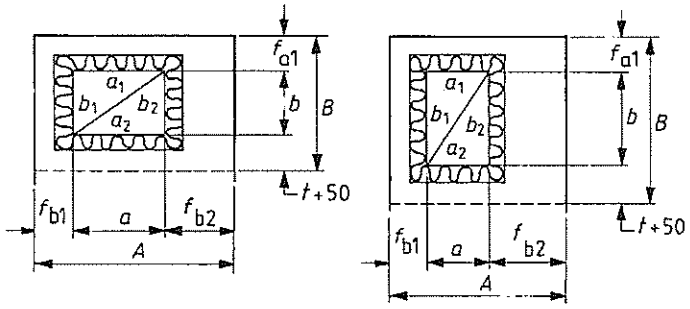

a) Situation 1: $a > b$ b) Situation 2: $a < b$

$A = a + f_{b1} + f_{b2}$
$B = b + f_{a1} + (t + 50)$*

All dimensions are in millimetres.

* If $(t + 50) < 100$, insert 100 (see A.5).

Figure A.8 Jointing and supporting pre-insulated air ducts with a firm obstacle on three sides

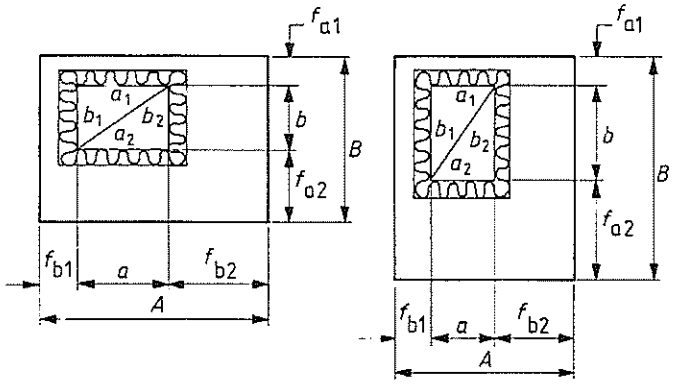

a) Situation 1: $a > b$ b) Situation 2: $a < b$

$A = a + f_{b1} + f_{b2}$
$B = b + f_{a1} + f_{a2}$

All dimensions are in millimetres.

Figure A.9 Jointing and supporting pre-insulated air ducts with a firm obstacle on four sides (obstacle not continuous for more than 1 m)

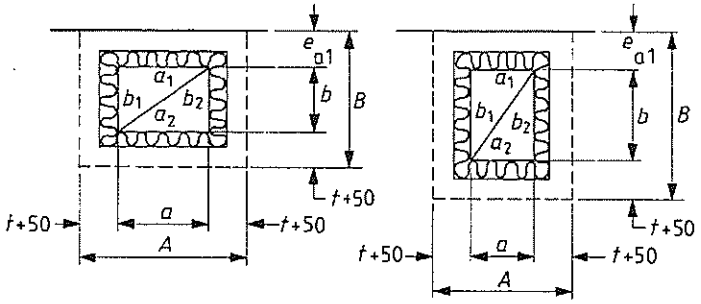

a) Situation 1: $a > b$ b) Situation 2: $a < b$

$A = a + 2\,(t + 50)$*
$B = b + e_{a1} + (t + 50)$*

All dimensions are in millimetres.

* If $(t + 50) < 100$, insert 100 (see A.5).

Figure A.10 Insulation of an air duct in position with a firm obstacle on one side

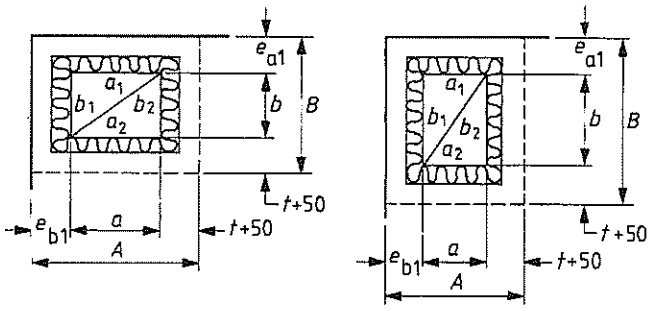

a) Situation 1: $a > b$ b) Situation 2: $a < b$

$A = a + e_{b1} + (t + 50)$*
$B = b + e_{a1} + (t + 50)$*

All dimensions are in millimetres.

* If $(t + 50) < 100$, insert 100 (see A.5).

Figure A.11 Insulation of an air duct in position with a firm obstacle on two sides

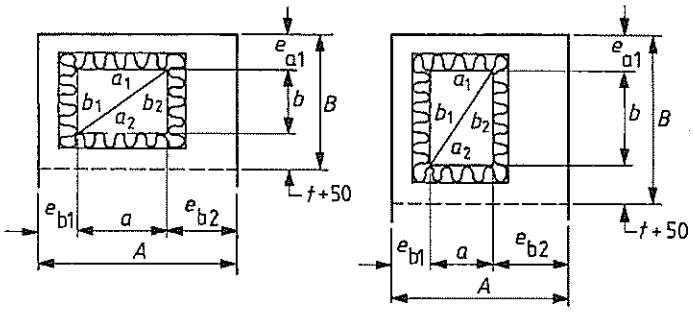

a) Situation 1: $a > b$ b) Situation 2: $a < b$

$A = a + e_{b1} + e_{b2}$
$B = b + e_{a1} + (t + 50)$*

All dimensions are in millimetres.

* If $(t + 50) < 100$, insert 100 (see A.5).

Figure A.12 Insulation of an air duct in position with a firm obstacle on three sides

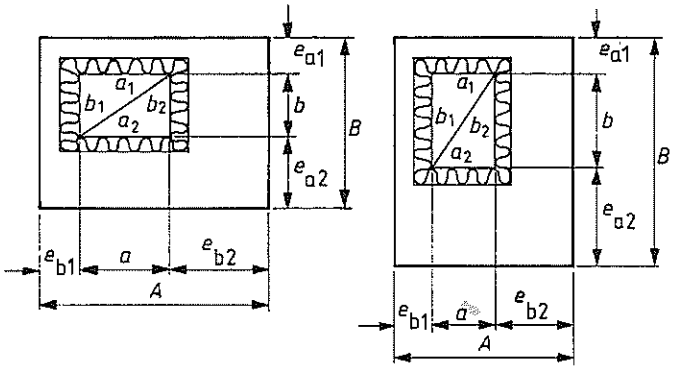

a) Situation 1: $a > b$ b) Situation 2: $a < b$

$A = a + e_{b1} + e_{b2}$
$B = b + e_{a1} + e_{a2}$
All dimensions are in millimetres.

Figure A.13 Insulation of an air duct in position with a firm obstacle on four sides (obstacle not continuous for more than 1 m)

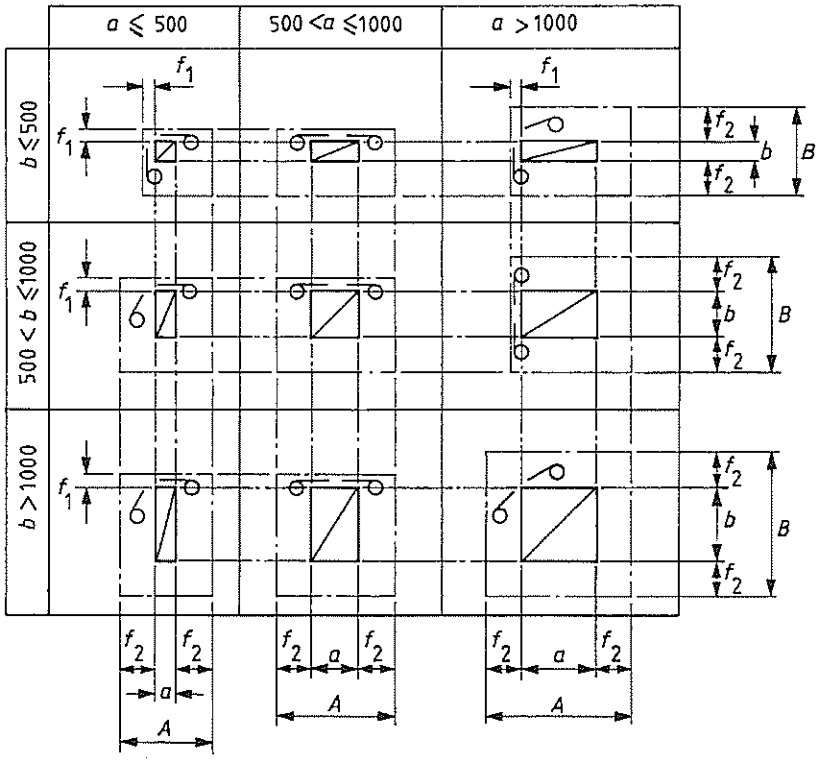

$f_1 = 100$ and $f_2 = 300$
All dimensions are in millimetres.

Figure A.14 Examples of installation spaces for flange jointed air ducts

Table A.1 Dimensions where $f_1 = 100$ and $f_2 = 300$

a	b	f_{b1}	f_{b2}	f_{a1}	f_{a2}	A	B
< 1 000	< 2 000	f_1	f_1	f_1	f_1	$a + 200$	$b + 200$
> 1 000				f_2			$b + 400$

a < 1000

b	a 100	150	200	250	300	400	500	600	800	1000	B
100											300
150											350
200											400
250											450
300											500
400											600
500											700
600											800
800											1000
1000											1200
1200											1400
1400											1600
1600											1800
1800											2000
2000											2200
A	300	350	400	450	500	600	700	800	1000	1200	

a > 1000

b	a 1200	1400	1600	1800	2000	B
100						
150						
200						
250						
300						700
400						800
500						900
600						1000
800						1200
1000						1400
1200						1600
1400						1800
1600						2000
1800						2200
2000						2400
A	1400	1600	1800	2000	2200	

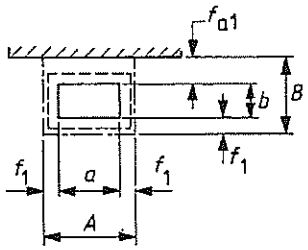

All dimensions are in millimetres.

Figure A.15 Installation space dimensions *A* and *B* for flange jointed air ducts with a firm obstacle on one side

Table A.2 Dimensions where $f_1 = 100$ and $f_2 = 300$

a	b	f_{b1}	f_{b2}	f_{a1}	f_{a2}	A	B
< 500	< 500	f_1	f_1	f_1	f_1	a + 200	b + 200
	> 500	f_2				a + 400	
> 500 < 1 000	< 2 000	f_2				a + 400	b + 200
> 1 000	< 1 000	f_1		f_2		a + 200	b + 400
	> 1 000	f_2				a + 400	

a < 1000

		a										
	b	100	150	200	250	300	400	500	600	800	1000	B
b < 500	100											300
	150											350
	200											400
	250											450
	300											500
	400											600
	500											700
	A	300	350	400	450	500	600	700	1000	1200	1400	
b > 500	500											800
	800											1000
	1000											1200
	1200											1400
	1400											1600
	1600											1800
	1800											2000
	2000											2200
	A		550	600	650	700	800	900	1000	1200	1400	

a > 1000

		a					
	b	1200	1400	1600	1800	2000	B
b < 1000	100						
	150						
	200						
	250						
	300						700
	400						800
	500						900
	600						1000
	800						1200
	1000						1400
	A	1400	1600	1800	2000	2200	
b > 1000	1200						1600
	1400						1800
	1600						2000
	1800						2200
	2000						2400
	A	1600	1800	2000	2200	2400	

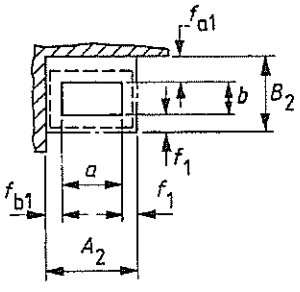

All dimensions are in millimetres.

Figure A.16 Installation space dimensions A and B for flange jointed air ducts with a firm obstacle on two sides

Table A.3 Dimensions where $f_1 = 100$ and $f_2 = 300$

a	b	f_{b1}	f_{b2}	f_{a1}	f_{a2}	A	B
< 500	< 500	f_1	f_2	f_1	f_1	$a + 400$	$b + 200$
	> 500	f_2				$a + 600$	
> 500 < 1 000	< 2 000	f_2				$a + 600$	$b + 200$
> 1 000	< 1 000	f_1		f_2		$a + 400$	$b + 400$
	> 1 000	f_2				$a + 600$	

$a < 1000$

		a										
	b	100	150	200	250	300	400	500	600	800	1000	B
b < 500	100											300
	150											350
	200											400
	250											450
	300											500
	400											600
	500											700
	A	500	550	600	650	700	800	900	1200	1400	1600	
b > 500	600											800
	800											1000
	1000											1200
	1200											1400
	1400											1600
	1600											1800
	1800											2000
	2000											2200
	A		750	800	850	900	1000	1100	1200	1400	1600	

$a > 1000$

		a					
	b	1200	1400	1600	1800	2000	B
b < 1000	100						
	150						
	200						
	250						
	300						700
	400						800
	500						900
	600						1000
	800						1200
	1000						1400
	A	1600	1800	2000	2200	2400	
b > 1000	1200						1600
	1400						1800
	1600						2000
	1800						2200
	2000						2400
	A	1800	2000	2200	2400	2600	

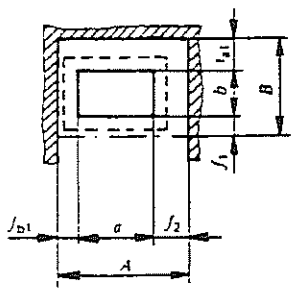

All dimensions are in millimetres.

Figure A.17 Installation space dimensions A and B for flange jointed air ducts with a firm obstacle on three sides

Table A.4 Dimensions where $f_1 = 100$ and $f_2 = 300$

a	b	f_{b1}	f_{b2}	f_{a1}	f_{a2}	A	B
< 500	< 500	f_1	f_2	f_1	f_2	$a + 400$	$b + 400$
	> 500	f_2				$a + 600$	
> 500 < 1 000	< 2 000	f_2				$a + 600$	$b + 400$
> 1 000	< 1 000	f_1		f_2		$a + 400$	$b + 600$
	> 1 000	f_2				$a + 600$	

$a < 1000$

		a										
	b	100	150	200	250	300	400	500	600	800	1000	B
b < 500	100											500
	150											550
	200											600
	250											650
	300											700
	400											800
	500											900
	A	500	550	600	650	700	800	900	1200	1400	1600	
b > 500	600											1000
	800											1200
	1000											1400
	1200											1600
	1400											1800
	1600											2000
	1800											2200
	2000											2400
	A		750	800	850	900	1000	1100	1200	1400	1600	

$a > 1000$

		a					
	b	1200	1400	1600	1800	2000	B
b < 1000	100						
	150						
	200						
	250						
	300						900
	400						1000
	500						1100
	600						1200
	800						1400
	1000						1600
	A	1600	1800	2000	2200	2400	
b > 1000	1200						1800
	1400						2000
	1600						2200
	1800						2400
	2000						2600
	A	1800	2000	2200	2400	2600	

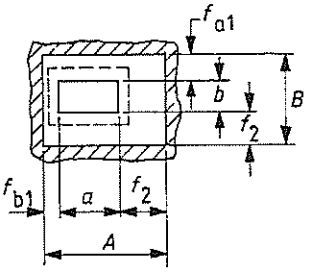

All dimensions are in millimetres.

Figure A.18 Installation space dimensions A and B for flange jointed air ducts with a firm obstacle on four sides

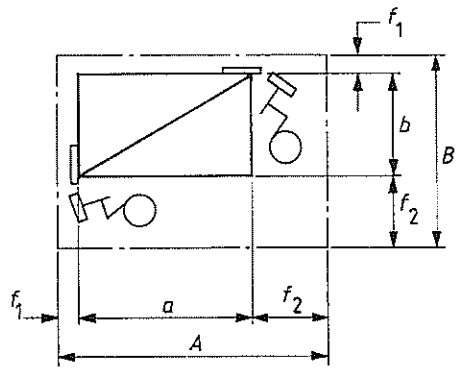

f_1 = 100 and f_2 = 400

All dimensions are in millimetres.

Figure A.19 Examples of installation space for slip jointed air ducts

Table A.5 Values of e_a and e_b

Dimensions in millimetres

Air duct side a or b	Values of e_a and e_b	Insulating method (see A.7.4)					
		1		2		3	
		Thickness					
		≤ 75	> 75	≤ 75	> 75	≤ 75	> 75
$a \leq 1000$	e_b	150	250	150	250	250	300
$a > 1000$		200	300	400	500	450	500
$b \leq 1000$	e_a	150	250	150	250	250	300
$b > 1000$		200	300	400	500	450	500

NOTE. See table A.6.

Table A.6 Values of e_{a1}, e_{a2}, e_{b1} and e_{b2} (see figure A.21)

Dimensions in millimetres

e_{a1}	e_a, but with a min. of $(t + f_1)$ for $a \leq 1000$ e_a, but with a min. of $(t + f_2)$ for $a > 1000$
e_{b1}	e_b, but with a min. of $(t + f_1)$ for $a \leq 500$ and $b \leq 500$ or $a > 1000$ and $b \leq 1000$ e_b, but with a min. of $(t + f_2)$ for $a \leq 500$ and $b > 500$ or $500 < a \leq 1000$ or $a > 1000$ and $b > 1000$
e_{a2}	min. 500
e_{b2}	min. 500

NOTE 1. For the values of e_a and e_b, see table A.5. f_1 = 100 mm and f_2 = 300 mm (see figure A.14).

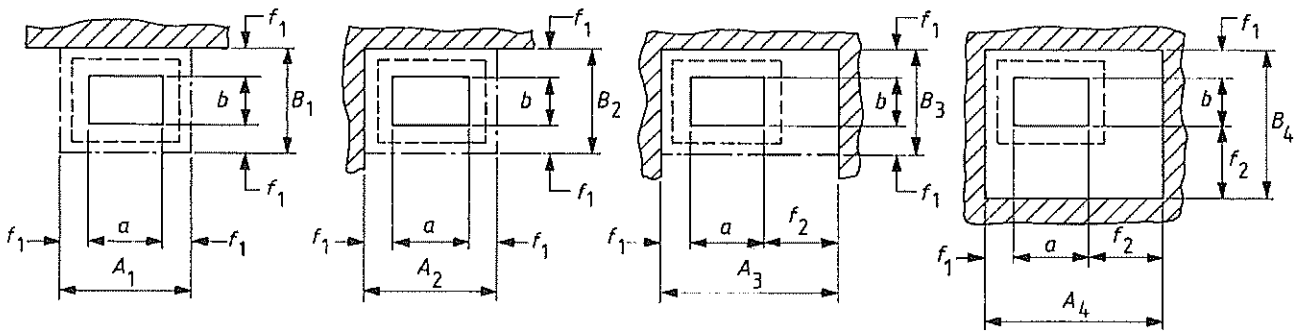

a) Firm obstacle on one side b) Firm obstacle on two sides c) Firm obstacle on three sides d) Firm obstacle on four sides

Dimension *b* of duct	Dimension *a* of duct															B_1, B_2 or B_3	B_4
	100	150	200	250	300	400	500	600	800	1000	1200	1400	1600	1800	2000		
100																300	600
150																350	650
200																400	700
250																450	750
300																500	800
400																600	900
500																700	1000
600																800	1100
800																1000	1300
1000																1200	1500
1200																1400	1700
1400																1600	1900
1600																1800	2100
1800																2000	2300
2000																2200	2500
A_1 or A_2	300	350	400	450	500	600	700	800	1000	1200	1400	1600	1800	2000	2200		
A_3 or A_4	600	650	700	750	800	900	1000	1100	1300	1500	1700	1900	2100	2300	2500		

f_1 = 100 and f_2 = 400

All dimensions are in millimetres.

Figure A.20 Installation space dimensions *A* and *B* for slip jointed air ducts with a firm obstacle on one or more sides

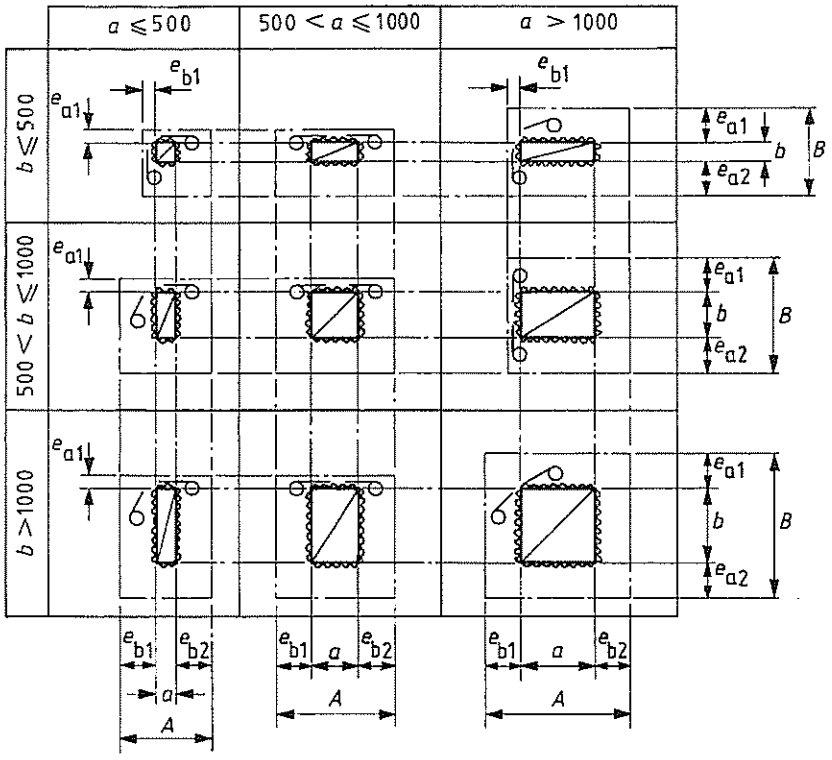

All dimensions are in millimetres.

Figure A.21 *e*-values

Table A.7 Values of e_{a1}, e_{a2}, e_{b1} and e_{b2} by firm obstacles

Dimensions in millimetres

	Firm obstacle on one side	Firm obstacle on two sides	Firm obstacle on three sides	Firm obstacle on four sides
e_{a1}	e_a, but min. $(t + f_1)$ for $a \leq 1000$ or min. $(t + f_2)$ for $a > 1000$	e_a, but min. $(t + f_1)$ for $a \leq 500$ or min. $(t + f_2)$ for $a > 500$		
e_{a2}	t, but min. 100	t, but min. 100		min. 500
e_{b1}	t, but min. 100	e_b, but min. $(t + f_1)$ for $b \leq 500$ or min. $(t + f_2)$ or $b > 500$		
e_{b2}	t, but min. 100	t, but min. 100	min. 500	min. 500

NOTE 1. For the values of e_a and e_b, see table A.5. f_1 = 100 mm and f_2 = 300 mm (see figure A.14).

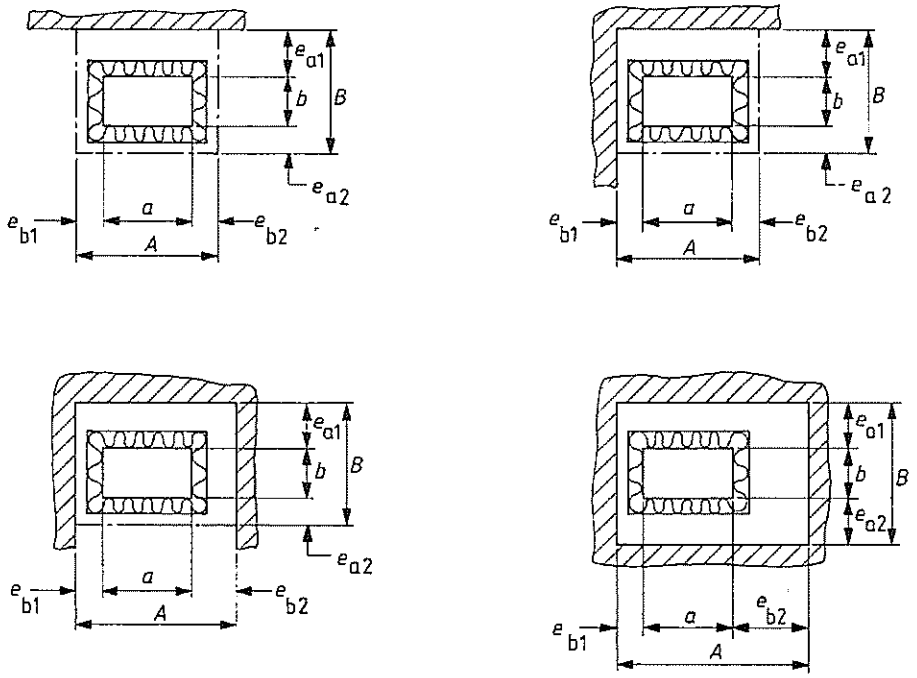

NOTE. Working space dimensions e_{a1}, e_{a2}, e_{b1} and e_{b2} for air ducts jointed and insulated in position, by one or more firm obstacles are given in table A.7.

Figure A.22 Minimum access allowance *e* for air ducts insulated in position

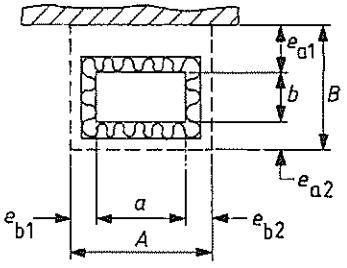

$A = a + 2t$ but min. $A = a + 200$

$B = b + e_{a1} + t$ but min. $B = b + 2t + 100$ for $a \leq 1000$

$B = b + 2t + 300$ for $a > 1000$

All dimensions are in millimetres.

Figure A.23 Installation space dimensions *A* and *B* for air ducts insulated in position with a firm obstacle on one side

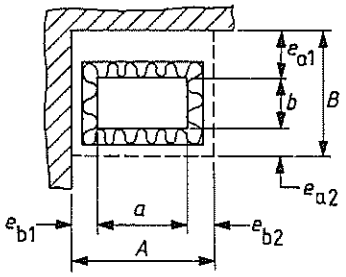

$A = a + e_{b1} + t$ but min. $A = a + 2t + 100$ for $b \leq 500$

$A = a + 2t + 300$ for $b > 500$

$B = b + e_{a1} + t$ but min. $B = b + 2t + 100$ for $a \leq 500$

$B = b + 2t + 300$ for $a > 500$

All dimensions are in millimetres.

Figure A.24 Installation space dimensions *A* and *B* for air ducts insulated in position with a firm obstacle on two sides

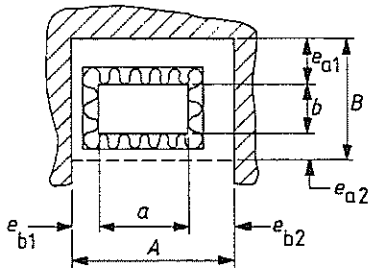

$A = a + e_{b1} + 500$ but min. $A = a + 2t + 550$ for $b \leq 500$

$A = a + 2t + 800$ for $b > 500$

$B = b + e_{a1} + t$ but min. $B = b + 2t + 100$ for $a \leq 500$

$B = b + 2t + 300$ for $a > 500$

All dimensions are in millimetres.

Figure A.25 Installation space dimensions *A* and *B* for air ducts insulated in position with a firm obstacle on three sides

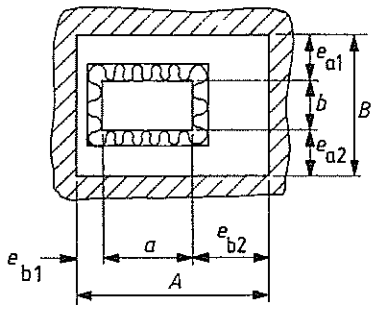

$A = a + e_{b1} + 500$ but min. $A = a + 2t + 600$ for $b \leq 500$

$A = a + 2t + 800$ for $b > 500$

$B = b + e_{a1} + 500$ but min. $B = b + 2t + 600$ for $a \leq 500$

$B = b + 2t + 300$ for $a > 500$

All dimensions are in millimetres.

Figure A.26 Installation space dimensions A and B for air ducts insulated in position with a firm obstacle on four sides

Table A.8. Values of n for a firm obstacle on one side

Dimensions in millimetres

$A = a + n$ $n = 2t$, but min. 200		Insulation method (see A.7.4)	Values of n					
			$t \leq 75$			$t > 75$		
			$t = 25$	$t = 50$	$t = 75$	$t = 100$	$t = 125$	$t = 150$
$a \leq 2000$	$b \leq 2000$	1, 2, 3	200	200	200	200	250	300
$B = b + n$ $n = e_{a1} + t$, but min. $2t$, 100 (or 300)								
$a \leq 1000$	$b \leq 2000$	1, 2, 3	175 275	200 300	230 325	350 400	375 425	400 450
$a > 1000$	$b \leq 2000$	1, 2, 3	350	400	450	500	550	600

Table A.9 Values of *n* for a firm obstacle on two sides

Dimensions in millimetres

$A = a + n$ $n = e_{b1} + t$, but min. $2t + 100$ (or 300)		Insulation method (see A.7.4)	Values of n					
			$t \leq 75$			t > 75		
			$t = 25$	$t = 50$	$t = 75$	$t = 100$	$t = 125$	$t = 150$
$a \leq 1000$	$b \leq 500$	1, 2	175	200	250	350	375	400
		3	275	300	325	400	425	450
	$b > 500$	1, 2, 3	350	400	450	500	550	600
$a > 1000$	$b \leq 500$	1	225	250	275	400	425	450
		2	425	450	475	600	625	650
		3	475	500	525	600	625	650
	$b > 500$	1	350	400	450	500	550	600
		2	425	450	475	600	625	650
		3	475	500	525	600	625	650
$B = b + n$ $n = e_{a1} + t$, but min. $2t + 100$ (or 300)		Insulation method (see A.7.4)	Values of n					
			$t \leq 75$			t > 75		
			$t = 25$	$t = 50$	$t = 75$	$t = 100$	$t = 125$	$t = 150$
$a \leq 500$	$b \leq 1000$	1, 2	175	200	250	350	375	400
		3	275	300	325	400	425	450
	$b > 1000$	1, 2, 3	350	400	450	500	550	600
$a > 550$	$b \leq 1000$	1	225	250	275	400	425	450
		2	425	450	475	600	625	650
		3	475	500	525	600	625	650
	$b > 1000$	1	450	400	450	500	550	600
		2	425	450	475	600	625	650
		3	475	500	525	600	625	650

Table A.10 Values of *n* for a firm obstacle on three sides

Dimensions in millimetres

$A = a + n$ $n = e_{b1} + 500$, but min. $2t + 600$ (or 800)		Insulation method (see A.7.4)	Values of n					
			$t \leq 75$			t > 75		
			$t = 25$	$t = 50$	$t = 75$	$t = 100$	$t = 125$	$t = 150$
$a \leq 1000$	$b \leq 500$	1, 2	650	700	750	800	850	900
		3	750	750	750	800	850	900
	$b > 500$	1, 2, 3	850	900	950	1000	1050	1100
$a > 1000$	$b \leq 500$	1	700	700	750	800	850	900
		2	900	900	950	1050	1050	1100
		3	950	950	950	1050	1050	1100
	$b > 500$	1	850	900	950	1000	1050	1100
		2	900	900	950	1050	1050	1100
		3	950	950	950	1050	1050	1100
$B = b + n$ $n = e_{a1} + t$, but min. $2t + 100$ (or 500)		Insulation method (see A.7.4)	Values of n					
			$t \leq 75$			t > 75		
			$t = 25$	$t = 50$	$t = 75$	$t = 100$	$t = 125$	$t = 150$
$a \leq 500$	$b \leq 1000$	1, 2	175	200	250	350	375	400
		3	275	300	325	400	425	450
	$b > 1000$	1, 2, 3	350	400	450	500	550	600
$a > 500$	$b \leq 1000$	1	225	250	275	400	425	450
		2	425	450	475	600	625	650
		3	475	500	525	600	625	650
	$b > 1000$	1	350	400	450	500	550	600
		2	425	450	475	600	625	650
		3	475	500	525	600	625	650

Table A.11 Values of n for a firm obstacle on four sides

Dimensions in millimetres

$A = a + n$ $n = e_{b1} + 500$, but min. $2t + 600$ (or 800)		Insulation method (see A.7.4)	Values of n					
			$t \leq 75$			t > 75		
			$t = 25$	$t = 50$	$t = 75$	$t = 100$	$t = 125$	$t = 150$
$a \leq 1000$	$b \leq 500$	1, 2	650	700	750	800	850	900
		3	750	750	750	800	850	900
	$b > 500$	1, 2, 3	850	900	950	1000	1050	1100
$a > 1000$	$b \leq 500$	1	700	700	750	800	850	900
		2	900	900	950	1050	1050	1100
		3	950	950	950	1050	1050	1100
	$b > 500$	1	850	900	950	1000	1050	1100
		2	900	900	950	1050	1050	1100
		3	950	950	950	1050	1050	1100
$B = b + n$ $n = e_{a1} + 500$, but min. $2t + 600$ (or 800)		Insulation method (see A.7.4)	Values of n					
			$t \leq 75$			t > 75		
			$t = 25$	$t = 50$	$t = 75$	$t = 100$	$t = 125$	$t = 150$
$a \leq 500$	$b \leq 1000$	1, 2,	650	700	750	800	850	900
		3	750	750	750	800	850	900
	$b > 1000$	1, 2, 3	850	900	950	1000	1050	1100
$a > 500$	$b \leq 1000$	1	700	700	750	800	850	900
		2	900	900	950	1050	1050	1100
		3	950	950	950	1050	1050	1100
	$b > 1000$	1	850	900	950	1000	1050	1100
		2	900	900	950	1050	1050	1100
		3	950	950	950	1050	1050	1100

Annex B (informative)

Installation space for air ducts (simplified method)

B.1 General

This annex differs from annex A in the following respects:

a) the method of calculation is greatly simplified;

b) the reference dimension for insulated ducts in this annex includes the thickness of the insulation;

c) space allowances for insulation fixed to the duct with adhesive are included.

This annex gives a method for calculating the minimum cross-sectional dimensions of the installation space necessary for installation and maintenance of thin walled air ducts (wall thickness not exceeding 15 mm) for ventilation, heating and air conditioning of buildings.

B.2 Field of application

The method is applicable to rectangular and circular air ducts exceeding 100 mm on the smallest side or 100 mm diameter. It relates only to simple runs of ducts and does not make allowance for fittings such as dampers, bellows, silencers, filters or test points.

The installation spaces of adjacent services are allowed to overlap provided that the necessary clear space is maintained around each service.

Where the allowances given by this method for installation and removal of the air ducts are applied, it is permissible for part of the installation space to be used for other services or building components after the air ducts are installed and tested, provided that these can be removed if the air duct is to be removed.

The method is not applicable to the design of installation spaces for services other than air ducts.

B.3 Interpretation, exceptions and limitations

B.3.1 The figures referred to in **A.6** and **A.7** show the installation spaces recommended for access to the face of the air duct shown at the top of the figure. The size of the duct is the finished width of this face including any external insulation but not flanges, cleats or other joint components. The hatched area around each figure denotes the area permitted for firm obstacles which may be part of the building or other services. A demountable casing may be installed in the installation space.

B.3.2 Provided the appropriate installation space exists at all points on either side of the point where services penetrate a wall or floor, and there are no joints or supports to be installed within this penetration, it is permissible for the dimensions of the penetration to be less than the installation space. In this case, only a minimum clearance around the services need be provided. In many cases this clearance should be sealed or fire stopped depending upon the particular circumstances of the installation.

B.3.3 Where the continuity of a firm obstacle on four sides exceeds 1 m, additional space for safety, drainage and access should be provided.

B.3.4 For circular ducts, the size of the duct should be taken as the diameter.

B.4 Installation spaces for air ducts not insulated or insulated before installation

Installation spaces for air ducts not insulated or insulated before installation are shown in figure B.1.

B.5 Installation spaces for air ducts insulated after installation

B.5.1 *Insulating methods*

Typical methods used for insulation after installation are as follows.

a) Method 1. Insulating with rigid slabs, for example, resin bonded mineral wool, fastened by thin steel bands or the like. Without protective covering. (One operation.)

b) Method 2. Insulating with soft, flexible materials such as mats of mineral wool, with or without netting reinforcement and metallic facing, wrapped around the air duct and sewed or clipped in position. Without protective covering. (One operation.)

c) Method 3. Insulating as methods 1 or 2, but with protective covering, for example sheet-metal. (Two operations, first insulating, and then covering.)

d) Method 4. Insulating with rigid or flexible materials fixed to the duct by adhesive, with or without protective covering. (One or two operations.)

B.5.2 *Installation spaces*

Installation spaces for ducts insulated after installation are shown in figure B.2, and table B.1.

For insulating methods 1, 3 and 4, extra space may need to be provided if rigid sheets of insulation or covering more than 400 mm wide are to be used.

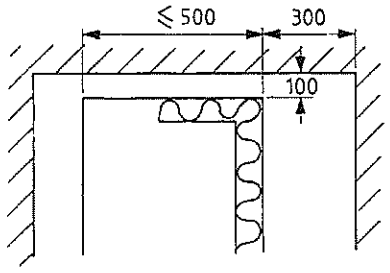

a) Bolted flange joints, size of duct plus insulation ≤ 500

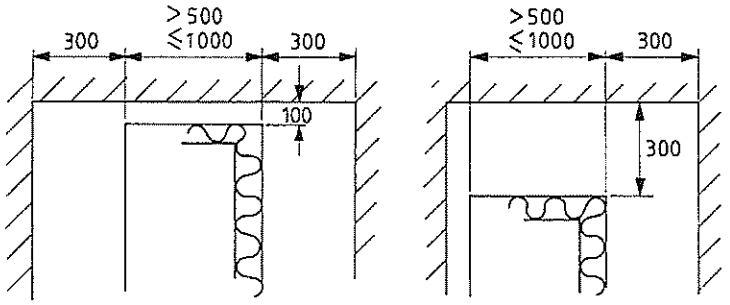

b) Bolted flange joints, size of duct plus insulation > 500 but ≤ 1000

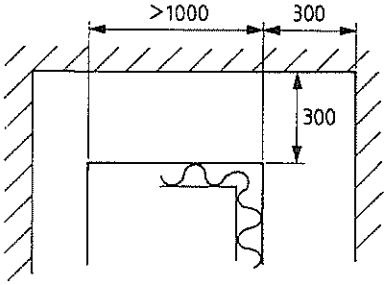

c) Bolted flange joints, size of duct plus insulation > 1000

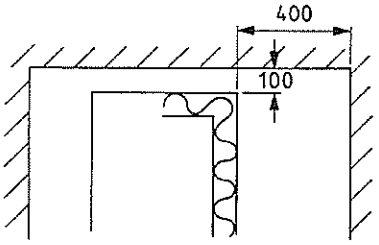

d) Slip joints

All dimensions are in millimetres.

Figure B.1 Installation spaces for uninsulated or pre-insulated air ducts

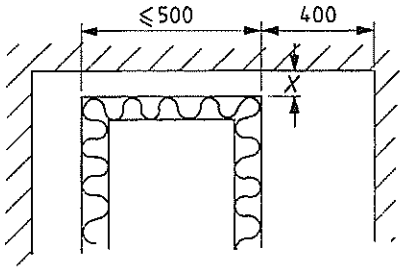

a) Size of duct plus insulation ≤ 500
NOTE. See table B.1 for dimensions of *X*.

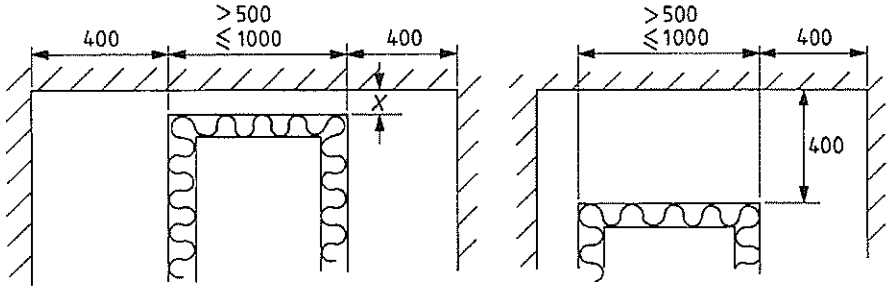

b) Size of duct plus insulation > 500 but ≤ 1000
NOTE. See table B.1 for dimensions of *X*.

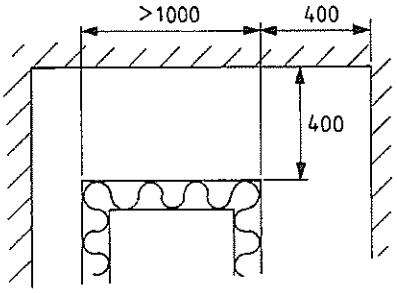

c) Size of duct plus insulation > 1000

All dimensions are in millimetres.

Figure B.2 Installation spaces for air ducts insulated after installation

Table B.1 Dimensions of *X*	
Insulation method (see B.5.1)	**Dimension *X*** mm
1	125
2	125
3	200
4	200

Annex C (informative)
Work in confined spaces

C.1 Work performed in a confined space, such as a small duct or ceiling void, can subject a worker to physical and psychological stresses and should be considered as potentially hazardous. Such stresses exaggerate medical disabilities. It is advisable to ensure that workers who have to enter confined spaces are trained and authorized.

C.2 The atmosphere inside a confined space can present a hazard to life due to:

a) oxygen deficiency or enrichment;

b) the presence of flammable gas or vapour;

c) the presence of toxic or corrosive material.

These hazards can be present before entry, e.g. from leakage of services, or may arise from the work to be carried out, e.g. welding or flame-cutting operations. Before entry into any confined space the potential hazards should be assessed, and a system of work to ensure safety should be devised and applied by a competent person.

C.3 The atmosphere inside a confined space should be adequately monitored and this will normally involve at least checking oxygen content before entry. Depending on the work being performed it may be necessary to practise periodic monitoring, as appropriate, while it continues.

C.4 Wherever possible, exhaust and/or supply ventilation should be provided to maintain a safe atmosphere of respirable air; systems of work which require workers to wear breathing apparatus should not be used unless provision of adequate ventilation is genuinely not reasonably practicable. Provision of adequate ventilation is the only acceptable method for dealing with potentially flammable vapours or oxygen enrichment hazards.

C.5 Because of the peculiar nature of hazards presented by the atmospheres inside confined spaces, particularly oxygen deficiency and toxic gases, it is essential that workers wear breathing apparatus where **C.3** cannot be complied with.

Breathing apparatus should be supplied with clean air from a source independent of the immediate atmosphere. Irrespective of whether breathing apparatus is worn, persons should never enter flammable or dangerously oxygen enriched atmospheres.

Annex D (informative)
Acts, bylaws and statutory regulations

D.1 General

The following references relate to the accommodation and maintenance of building services in ducts. The list is not intended to be exhaustive.

D.2 England, Wales and Scotland

Asbestos (Licensing) Regulations, 1983 (SI 1649)

Asbestos (Prohibitions) Regulations, 1992 (SI 3067)

Building Regulations, 1991 (SI 2768)

Building Standards (Scotland) Regulations, 1990 (SI 2179)

Construction (Design and Management) Regulations, 1994

Construction (General Provisions) Regulations, 1961 (SI 1580)

Construction (Working Places) Regulations, 1966 (SI 94)

Control of Asbestos at Work Regulations, 1987 (SI 2115)

Control of Pollution Act, 1974. Chapter 40

Electricity at Work Regulations, 1989

Electricity (Factories Act) Special Regulations, 1908 (SI 1312) and 1944 (SI 739)

Fire Certificates (Special Premises) Regulations, 1976 (SI 2003)

Fire Precautions Act, 1971. Chapter 40

Fire Precautions Regulations, 1989 (SI 79)

Fire Precautions (Non-Certificated Factory, Office, Shop and Railway Premises) Regulations, 1989 (SI 78)

Gas Safety Regulations, 1972 (SI 1178)

Gas Safety (Installation and use) Regulations, 1994 (SI 1886)

Health and Safety at Work etc. Act, 1974. Chapter 37

Highly Flammable Liquids and Liquefied Petroleum Gases Regulations, 1972 (SI 917)

Offices, Shops and Railway Premises Act, 1963. Chapter 41

Petroleum (Consolidation) Act, 1928. Chapter 32

Safety Signs Regulations, 1980 (SI 1471)

Water Bylaws as made by the appropriate water undertaking authority

D.3 Northern Ireland

Asbestos (Prohibition) Regulations (Northern Ireland), 1993 (SR 25)

Building Regulations (Northern Ireland), 1994 (SR 243)

Building Regulations (Northern Ireland), Amdt, 1995 (SR 473)

Construction (General Provisions) Regulations (Northern Ireland), 1963 (SR 87)

Construction (Working Places) Regulations (Northern Ireland), 1967 (SR 175)

Control of Asbestos at Work Regulations (Northern Ireland), 1988 (SR 74)

Electricity at Work Regulations (Northern Ireland), 1991 (SR 13)

Electricity Supply (Northern Ireland) Regulations, 1991 (SR 536)

Electricity (Factories Act) Special Regulations (Northern Ireland),1945 (SR 113)

Factories Act (Northern Ireland), 1965. Chapter 20

Gas Safety (Installation and use) Regulations (Northern Ireland), 1995 (SR 3)

Health and Safety at Work (Northern Ireland) Order, 1978 (SR 1039 CH 9)

Highly Flammable Liquids and Liquefied Petroleum Gases Regulations (Northern Ireland) 1975 (SR 256)

Offices and Shop Premises Act (Northern Ireland), 1966. Chapter 26

Petroleum (Consolidation) Act (Northern Ireland), 1929. Chapter 13

Pollution Control and Local Government (Northern Ireland) Regulations, 1978 (SR 1049 NI 19)

Safety Signs (Northern Ireland) Regulations, 1981

Water and Sewage Services (Northern Ireland) Regulations, 1993 (SR 3165 NI 6)

blank

List of references (see clause 2)

Normative references

BSI publications

BRITISH STANDARDS INSTITUTION, London

BS 476 :	*Fire tests on building materials and structures*
BS 476 : Part 4 : 1970	*Non-combustibility test for materials*
BS 476 : Part 24 : 1987	*Method for determination of fire resistance of ventilation ducts*
BS 1710 : 1984	*Specification for identification of pipelines and services*
BS 2830 : 1994	*Specification of suspended access equipment (suspended chairs, traditional steeplejack's seats, work cages, cradles and platforms) for use in the building, engineering construction, steeplejack and cleaning industries*
BS 4211 : 1994	*Specification for ladders for permanent access to chimneys, other high structures, silos and bins*
BS 4434 : 1995	*Specification for safety and environmental aspects in the design, construction and installation of refrigerating appliances and systems*
BS 5266 :	*Emergency lighting*
BS 5266 : Part 1 : 1988	*Code of practice for the emergency lighting of premises other than cinemas and other specified premises used for entertainment*
BS 5306 :	*Fire extinguishing installations and equipment on premises*
BS 5306 : Part 0 : 1986	*Guide for the selection of installed systems and other fire equipment*
BS 5378 :	*Safety signs and colours*
BS 5378 : Part 1 : 1980	*Specification for colour and design*
BS 5422 : 1990	*Method for specifying thermal insulating materials on pipes, ductwork and equipment (in the temperature range −40 °C to +700 °C)*
BS 5482 :	*Domestic butane and propane gas burning installations*
BS 5482 : Part 1 : 1994	*Specification for installations at permanent dwellings*
BS 5499 :	*Fire safety signs, notices and graphic symbols*
BS 5499 : Part 1 : 1990	*Specification for fire safety signs*
BS 5499 : Part 2 : 1986	*Specification for self-luminous fire safety signs*
BS 5499 : Part 3 : 1990	*Specification for internally-illuminated fire safety signs*
BS 5839 :	*Fire detection and alarm systems for buildings*
BS 5839 : Part 1 : 1988	*Code of practice for system design, installation and servicing*
BS 5845 : 1991	*Specification for permanent anchors for industrial safety belts and harnesses*
BS 5970 : 1992	*Code of practice for thermal insulation of pipework and equipment (in temperature range −100 °C to +870 °C)*
BS 6100	*Glossary of building and civil engineering terms*
BS 6701 : 1994	*Code of practice for installation of apparatus intended for connection to certain telecommunication systems*
BS 6891 : 1988	*Specification for installation of low pressure gas pipework of up to 28 mm (R1) in domestic premises (2nd family gas)*
BS 7273 :	*Code of practice for the operation of fire protection measures*
BS 7273 : Part 2 : 1992	*Mechanical actuation of gaseous total flooding and local application extinguishing systems*
BS 7671 : 1992	*Requirements for electrical installations — IEE Wiring Regulations — Sixteenth edition*
BS EN 354 : 1993	*Personal protective equipment against falls from a height — Lanyards*
BS EN 358 : 1993	*Personal equipment for positioning and prevention of falls — Work positioning systems*
BS EN 361 : 1993	*Personal protective equipment against falls from a height — Full body harnesses*
BS EN 365 : 1993	*Personal protective equipment against falls from a height — General requirements for instructions for use and for marking*

Other references

[11] Liquefied Petroleum Gas Association Code of Practice No. 22. Coupar Angus: LPGA[2], 1996
[12] Institution Of Gas Engineers. IGE/UP/2 *Gas installation pipework, boosters and compressors on industrial and commercial premises.* London: IGE, 1994[3]
[13] Institution Of Gas Engineers. IGE/TD/4 Edition 3 *Gas services.* London: IGE, 1994
[23] Health & Safety Executive Guidance Note GS 5 *Entry into confined spaces.* Sudbury: HSE Books, 1995
[24]Institution Of Gas Engineers. IGE/SR/5 *Entry into and work associated with confined spaces.* London: IGE, 1992

Informative references

BSI publications

BRITISH STANDARDS INSTITUTION, London

BS 3974 :	*Specification for pipe supports*
BS 3974 : Part 1 : 1974	*Pipe hangers, slider and roller type supports*
BS 3974 : Part 2 : 1978	*Pipe clamps, cages, cantilevers and attachments to beams*
BS 5345 :	*Code of practice for the selection, installation and maintenance of electrical apparatus for use in potentially explosive atmospheres (other than mining applications or explosive processing and manufacture)*
BS 5345 : Part 1 : 1989	*General recommendations*
BS 5345 : Part 2 : 1983	*Classification of hazardous areas*
BS 5429 : 1976	*Code of practice for safe operation of small-scale storage facilities for cryogenic liquids*
BS 5493 : 1977	*Code of practice for protective coating of iron and steel structures against corrosion*
BS 5572 : 1994	*Code of practice for sanitary pipework*
BS 5925 : 1991	*Code of practice for ventilation principles and designing for natural ventilation*
BS 6213 : 1982	*Guide to selection of constructional sealants*
BS 6700 : 1987	*Specification for design, installation, testing and maintenance of services supplying water for domestic use within buildings and their curtilages*
BS 8210 : 1986	*Guide to building maintenance management*
BS 8233 : 1987	*Code of practice for sound insulation and noise reduction for buildings*
BS EN 50014 : 1993	*Electrical apparatus for potentially explosive atmospheres — General requirements*
CP 102 : 1973	*Code of practice for protection of buildings against water from the ground*
PD 6484 : 1979	*Commentary on corrosion at bi-metallic contacts and its alleviation*

[2] Available from William Culross and Sons Ltd., Coupar Angus, Perthshire PH13 9DF.
[3] IGE publications are available from the Institution of Gas Engineers, 21 Portland Place, London W1N 3AF.

Other references

[1] GREAT BRITAIN. Approved Document published in connection with B2/B3/B4 of the Building Regulations 1991. London: HMSO
[2] GREAT BRITAIN. Health and Safety at Work etc. Act 1974. London: HMSO
[3] GREAT BRITAIN. Asbestos (Licensing) Regulations 1983. London: HMSO
[4] GREAT BRITAIN. Asbestos (Prohibition) Regulations 1992. London: HMSO
[5] GREAT BRITAIN. Control of Asbestos at Work Regulations 1987. London: HMSO
[6] Health & Safety Executive Guidance Note EH 10 *Asbestos — exposure limits and measurement of airborne dust concentrations.* Sudbury: HSE Books, 1990[4)]
[7] Health & Safety Executive Guidance Note L 27 *Control of asbestos at work — Approved code of practice.* Sudbury: HSE Books, 1993
[8] Health & Safety Executive Guidance Note L 28 *Work with asbestos insulation, asbestos coating and asbestos insulating board — Approved code of practice.* Sudbury: HSE Books, 1993
[9] GREAT BRITAIN. Gas Safety Regulations 1972. London: HMSO
[10] GREAT BRITAIN. Gas Safety (Installation and Use) Regulations 1994. London: HMSO
[14] Health & Safety Executive Guidance Note EH 22 *Ventilation of the workplace.* Sudbury: HSE Books, 1988
[15] Health & Safety Executive Guidance Note EH 40/94 *Occupational exposure limits.* Sudbury: HSE Books, 1996
[16] Department of Health Technical Report HTR 2022 *Medical gas pipeline systems* Vol. 1-5. Leeds: NHSS Estates[5)], 1994
[17] Department of Health Technical Report HTR 2023 *Access and accommodation for engineering services* Vol. 1 & 2. Leeds: NHSS Estates[5)], 1995
[18] Health & Safety Executive Guidance Note EH 54 *Assessment of exposure to fume from welding and allied processes.* Sudbury: HSE Books, 1990
[19] Health & Safety Executive Guidance Note EH 55 *The control of exposure to fume from welding, brazing and similar processes.* Sudbury: HSE Books, 1990
[20] BASEEFA list. 8th edition *Certified and approved explosion protected electrical equipment.* Sudbury: HSE Books, 1993
[21] Health & Safety Executive Guidance Note GS 16 *Gaseous fire extinguishing systems — Precautions for toxic and asphyxiating hazards.* Sudbury: HSE Books, 1984
[22] Heating And Ventilating Contractors' Association. DW142 *Specification for sheet metal ductwork — Low, medium and high pressure/velocity air systems.* London: Heating and Ventilating Contractors' Association, 1982
[25] Health & Safety Executive Guidance Note EH 9 *Spraying of highly flammable liquids.* Sudbury: HSE Books, 1977
[26] Eurovent Document 2/3 *Sheet metal air ducts — Standard for dimensions.* Bourne End: Heating, Ventilating and Air Conditioning Manufacturers' Association[6)], 1976

[4)] HSE Guidance Notes are available from HSE Books, PO Box 1999, Sudbury, Suffolk CO10 6FS.
[5)] Available from NHSS Estates, Room 2E4, 1 Trevelyan Square, Boan Lane, Leeds LS1 6AE.
[6)] Available from the Heating, Ventilating and Air Conditioning Manufacturers' Association, 6 Furlong Road, Bourne End, Buckinghamshire. SL8 5DG.

BSI — British Standards Institution

BSI is the independent national body responsible for preparing British Standards. It presents the UK view on standards in Europe and at the international level. It is incorporated by Royal Charter.

Revisions

British Standards are updated by amendment or revision. Users of British Standards should make sure that they possess the latest amendments or editions.

It is the constant aim of BSI to improve the quality of our products and services. We would be grateful if anyone finding an inaccuracy or ambiguity while using this British Standard would inform the Secretary of the technical committee responsible, the identity of which can be found on the inside front cover. Tel: 020 8996 9000. Fax: 020 8996 7400.

BSI offers members an individual updating service called PLUS which ensures that subscribers automatically receive the latest editions of standards.

Buying standards

Orders for all BSI, international and foreign standards publications should be addressed to Customer Services. Tel: 020 8996 9001. Fax: 020 8996 7001.

In response to orders for international standards, it is BSI policy to supply the BSI implementation of those that have been published as British Standards, unless otherwise requested.

Information on standards

BSI provides a wide range of information on national, European and international standards through its Library and its Technical Help to Exporters Service. Various BSI electronic information services are also available which give details on all its products and services. Contact the Information Centre. Tel: 020 8996 7111. Fax: 020 8996 7048.

Subscribing members of BSI are kept up to date with standards developments and receive substantial discounts on the purchase price of standards. For details of these and other benefits contact Membership Administration. Tel: 020 8996 7002. Fax: 020 8996 7001.

Copyright

Copyright subsists in all BSI publications. BSI also holds the copyright, in the UK, of the publications of the international standardization bodies. Except as permitted under the Copyright, Designs and Patents Act 1988 no extract may be reproduced, stored in a retrieval system or transmitted in any form or by any means – electronic, photocopying, recording or otherwise – without prior written permission from BSI.

This does not preclude the free use, in the course of implementing the standard, of necessary details such as symbols, and size, type or grade designations. If these details are to be used for any other purpose than implementation then the prior written permission of BSI must be obtained.

If permission is granted, the terms may include royalty payments or a licensing agreement. Details and advice can be obtained from the Copyright Manager. Tel: 020 8996 7070.

BSI
389 Chiswick High Road
London
W4 4AL