SINGAPORE STANDARD

SS 532 : 2007

(ICS 13.220; 13.300)

CODE OF PRACTICE FOR

The storage of flammable liquids

(Formerly CP 40 : 1987)

Published by
SPRING Singapore
2 Bukit Merah Central
Singapore 159835
SPRING Singapore Website: www.spring.gov.sg
Standards Website: www.standards.org.sg

SPRING singapore

SINGAPORE STANDARD

SS 532 : 2007

(ICS 13.220; 13.300)

CODE OF PRACTICE FOR

The storage of flammable liquids

(Formerly CP 40 : 1987)

All rights reserved. Unless otherwise specified, no part of this Singapore Standard may be reproduced or utilised in any form or by any means, electronic or mechanical, including photocopying and microfilming, without permission in writing from SPRING Singapore at the address below:

Head
Standardisation Department
SPRING Singapore
2 Bukit Merah Central
Singapore 159835
Telephone: 62786666 Telefax: 62786667
Email: stn@spring.gov.sg

ISBN 981-4154-50-4

This Singapore Standard was approved by the Chemical Standards Committee on behalf of the Standards Council of Singapore on 28 February 2007.

First published, 1987
First revision, 2007

The Chemical Standards Committee appointed by the Standards Council consists of the following members:

		Name	*Capacity*
Chairman	:	Dr Peter Chan	*Member, Standards Council*
Deputy Chairperson	:	Ms Lam Kit Wing	*Member, Standards Council*
Secretary	:	Ms Ho Phuy Bee	*SPRING Singapore*
Members	:	Dr Fang Shu Nong	*Singapore Surface Finishing Society (SSFS)*
		Er. Fong Chor Cheong	*Housing & Development Board*
		Mr Terence Koh	*Singapore Chemical Industry Council*
		Mr Alan Lim	*Maritime and Port Authority Singapore*
		Mr Nee Pai How	*Plastics and Rubber Institute of Singapore (PRIS)*
		Mr Larry Ng Lye Hock	*Urban Redevelopment Authority*
		Ms Ong Kah Kee	*Singapore Manufacturers' Federation*
		Ms Pamela Phua	*Singapore Paints Manufacturers' Association*
		Mr Pitt Kuan Wah	*National Archives of Singapore*
		Mr Tan Quee Hong	*National Environment Agency*
		Assoc Prof Teo Khay Chuan	*National Institute of Education (Nanyang Technological University)*
		Dr Alastair Trigg	*Institute of Microelectronics (Singapore Surface Analysis Interest Group)*
		Mr Wang Hui Hua	*Singapore Chemical Industry Council*
		Dr Yin Xi Jiang / Mr Vincent H H Tan	*Singapore Surface Finishing Society*
Co-opted Members	:	Mr Lim Eng Kiat	*Individual Capacity*
		Mr Seah Khen Hee	*Individual Capacity*

The Technical Committee on Petroleum and its Products appointed by the Chemical Standards Committee and responsible for the preparation of this standard consists of representatives from the following organisations:

		Name	*Capacity*
Chairman	:	Mr Wang Hui Hua	*Member, Chemical Standards Committee*
Secretary	:	Ms Jesline Lim Lay Eng	*SPRING Singapore*
Members	:	Mr Joel Chong Sheau Ming	*Singapore Refining Co Pte Ltd*
		Prof Lee Jim Yang	*National University of Singapore*
		Ms Elizabeth Lee Sweet Choong	*Setsco Services Pte Ltd*

Members	:	Mr Soh Hong Chow	*SGS Testing & Control Services Singapore Pte Ltd*
		Mr Nick Tan Kwee Meng	*National Environment Agency*
		Mr Tan Wan Yong	*ExxonMobil Asia Pacific Pte Ltd*
		Dr Tsai Siew Fah	*DNV Petroleum Services Pte Ltd*
Co-opted Members	:	Cpt Han Fook Kuang	*Singapore Civil Defence Force*
		Mr Ho Chee Fook	*Individual Capacity*
		Mr Louis Hwang Teng Sun	*Individual Capacity*
		Lta Steve Koa Hean Kiong	*Singapore Civil Defence Force*
		Mr Koh Soon Chuang	*The Institution of Fire Engineers*
		Mr Low Teck Lye	*Individual Capacity*
		Er Ismadi Mohamed	*Ministry of Manpower*
		Mr David Ong	*Individual Capacity*
		Mr Edward Wee	*Individual Capacity*
		Mr Michael Yan	*Individual Capacity*
		Mr Philip Ying	*Individual Capacity*

(blank page)

Contents

Page

Foreword 7

CLAUSES

1 Scope 9
2 Normative references 9
3 Definitions 10
4 Minor storage 18
5 General requirements for package and tank storage 22
6 Package storage and handling 28
7 Storage in tanks 43
8 Piping and tank auxiliaries 60
9 Operations 63
10 Fire fighting facilities 69

ANNEX

A Tank venting 79

TABLES

1 Hazard precautionary statement 14
2 Minor storage 19
3 Illustration of flammable liquids labelling 27
4 Maximum allowable quantity (MAQ) in m^3 for groups of packages 33
5 Separation distances for groups to protected place (D1)/on-site facility (D2) 34
6 Separation distances for groups to boundary (D3)/fixed ignition sources (S) 34
7 Size of indoor package store based on type of fire protection system 37
8 Separation distances for Category 1, 2, 3 and 4 storage tank capacity more than 3500 m^3 51
9 Separation distances for storage tank capacity less than 3500 m^3 54
10 Foam systems 73
11 Number of fire extinguishers 77
A1 Thermal venting requirements 80
A2 Emergency venting capacity 81
A3 Diameters of free circular openings 82

Page

FIGURES

1	Illustration of site definitions	17
2	Separation distances between minor storages	21
3	Transit storage	24
4(a)	Typical package stores – External detached store without wall	29
4(b)	Typical package stores – External detached store with wall(s)	29
4(c)	Typical package stores – External attached store sharing wall(s)	30
4(d)	Typical package stores – Internal store	30
4(e)	Typical package stores – Fire separated stores	30
5(a)	Stores having opposite external sides open	39
5(b)	Stores having one external side open	39
5(c)	Stores having one external wall with natural vents	39
5(d)	Stores having one external side open and vents in adjacent or opposite external walls	40
5(e)	A store having vents in one pair of opposite external walls	40
6	Illustration of terms relating to various tank locations for all categories	43
7	Illustration of terms relating to various tanks locations for category 4 flammable liquids only	44
8	Bund location limits	53
9	Use of fire wall for reduction of separation distances	55
10(a)	Acceptable layout	55
10(b)	Unacceptable layout	55

Page

17
21
24
29
29
30
30
30
39
39
39
40
40
43
44
53
55
55
55

Foreword

This Singapore Standard Code of Practice was prepared by the Technical Committee on Petroleum and its Products under the direction of the Chemical Standards Committee. It is a revision of CP 40 which has been renumbered as SS 532.

The standard deals with flammable liquids, as classified in the United Nations Globally Harmonized System of Classification and Labelling of Chemicals (GHS). The standard covers flammable liquids of Category 1, 2, 3 and 4 as classified in GHS. In addition, flash point of up to 150 °C is covered in the standard as required by the local regulatory authority. The objective of the standard is to provide guidance and best practices for the safety of persons and the prevention of damage to property when storing or handling flammable liquids. It covers storage and handling of flammable liquids in installations but does not include their transportation.

The revision of this standard includes the best practices and philosophies developed since the last edition, such as the 'Guidelines on storage of flammable and combustible liquids in aboveground atmospheric storage tanks' by Oil and Petrochemical Industry Technical and Safety Committee (OPITSC) and the former Singapore Joint Civil Defence Forces (now known as Singapore Civil Defence Force). The new edition also aligns with the current regulatory authorities, emergency response services, environmental requirements and local publications/standards as well as United Nations guidelines on GHS.

This standard does not override any statutory requirements but should be used in conjunction with such requirements. At the time of publication, this standard is expected to be used by the Singapore Civil Defence Force as part of the fire safety requirements.

In preparing this Singapore Standard, reference was made to the following publications:

1. Australian Standard AS 1940 : 2004, incorporating its amendment No. 1 — The storage and handling of flammable and combustible liquids
2. South African National Standard SANS 10089-1 : 2003 — The petroleum industry, Part 1 : Storage and distribution of petroleum products in above-ground bulk installations
3. National Fire Protection Association NFPA No. 30 : 2003 Edition — Flammable and combustible liquids code
4. Institute of Petroleum — Model code of safety practice in the petroleum industry, Part 3 – Refining safety code
5. 'Guidelines on storage of flammable & combustible liquids in aboveground atmospheric storage tanks', 1991 edition by Oil and Petrochemical Industry Technical & Safety Committee (OPITSC) and the former Singapore Joint Civil Defence Forces
6. 'Globally Harmonized System of Classification and Labelling of Chemicals (GHS)', first revised edition, 2005 by United Nations

Acknowledgement is made for the use of information from these publications.

Attention is drawn to the possibility that some of the elements of this Singapore Standard may be the subject of patent rights. SPRING Singapore shall not be held responsible for identifying any or all of such patent rights.

NOTE

1. *Singapore Standards are subject to periodic review to keep abreast of technological changes and new technical developments. The revisions of Singapore Standards are announced through the issue of either amendment slips or revised editions.*

2. *Compliance with a Singapore Standard does not exempt users from legal obligations.*

Code of practice for the storage of flammable liquids

1 Scope

This Singapore Standard sets out requirements and recommendations for the safe storage and storage handling of flammable liquids, as classified in the United Nations Globally Harmonized System of Classification and Labelling of Chemicals (GHS), listed in the Chapter of Flammable Liquids. In addition, the standard also covers liquids of flash point up to 150 °C.

This standard does not apply to the following:

a) Shipboard installations;

b) Any storage that is mobile (fuel tanks and tankers, ISO tanks and tankers), except as defined for transit storage purpose;

c) Any plant or equipment in which liquid is processed, together with any vessels which form an integral part of the processing plant or equipment;

d) Bitumen and its mixtures prepared for road-making;

e) Flammable liquids stored in tank exceeding 175 millibar above atmospheric pressure; and

f) Liquefied gases that are maintained in the liquid phase for storage by means of pressure or refrigeration.

2 Normative references

The following referenced documents are indispensable for the application of this standard. The latest editions of the documents (including any amendments) apply.

API SPEC 6FA	Fire test for valves
API STD 620	Design and construction of large, welded, low-pressure storage tanks
API STD 650	Welded steel tanks for oil storage
API STD 2000	Venting atmospheric and low-pressure storage tanks – Non refrigerated and refrigerated
API RP 2003	Protection against ignitions arising out of static, lightning and stray currents
ASTM D5	Standard test method for penetration of bituminous materials
BS EN 12266-1	Industrial valves. Testing of valves. Pressure tests, test procedures and acceptance criteria. Mandatory requirements
BS EN 12266-2	Industrial valves. Testing of valves. Tests, test procedures and acceptance criteria. Supplementary requirements

NFPA 11	Standard for low-, medium-, and high-expansion foam
NFPA 70	National electrical code
SS 232	Portable fire extinguishers
SS 254	Electrical apparatus for explosive gas atmospheres
SS 508	Graphical symbols - Safety colours and safety signs
SS CP 33	Lightning protection
SS CP 52	Automatic fire sprinkler system
SS CP 55	Use and maintenance of portable fire extinguishers
SS CP 84	Entry into and safe working in confined spaces

National Environment Agency's Code of practice on pollution control

3 Definitions

For the purpose of this standard, the following definitions shall apply:

3.1 Approved, approval

With the approval of, acceptable to, and meeting the prescribed standards of the authority having jurisdiction.

3.2 Authority, authority having jurisdiction

The Authority having statutory (legal) control of the subject installation.

3.3 Battery limit

The boundaries of process units or on-site facilities where flammable liquids are being processed or handled within a boundary (see Figure 1).

3.4 Boundary

The perimeter of the whole of the site under the same occupancy as the storage area (see Figure 1).

3.5 Bund

An embankment of earth, or a wall of brick, stone, concrete or other approved materials which may form part or all of the perimeter of a compound.

3.6 Capacity (of a tank)

The total volume which the tank will accept without spilling or leaking.

NOTE – It is recognised that the available capacity of a tank will normally be less than the full capacity.

3.7 Compound

An area bounded by ground contours or by a bund, and intended to retain spillage or leakage from any tank within the compound.

3.8 Company Emergency Response Team (CERT)

Trained emergency response personnel whether auxillaries or full timers who are responsible for handling the initial response of an incident.

3.9 Fire fighting facilities

A built-in system that introduces appropriate agent/medium for the purpose of extinguishing or cooling to the individual area that needs to be protected.

3.9.1 Fixed system

A complete set of fire fighting facilities (refer to water spray/mist, sprinkler or monitor system etc that is completed with direct agent supply such as foam, chemical powder, gas or water) that provide instantaneous response by discharging the required agent to specific location either for the purpose of extinguishment or cooling effect (as exposure protection). The mode of activation can be either automatic – by auto detection system such as fusible link, smoke, heat, UV (ultraviolet flame detector), IR (infra-red flame detector) detection system; or manual – by designated staff.

3.9.2 Semi-fixed system

A set of fire fighting facilities (refers to water spray/mist, sprinkler or monitor system etc) that provide only with all the necessary built-in piping and valves system without the connection to the agent supply. A semi-fixed system is always integrated with breeching inlet to allow Company Emergency Response Team (CERT) to carry out the necessary connection from their mobile/portable equipment.

3.9.3 Mobile and portable fire fighting appliances

This includes mobile and portable fire appliances such as fire hoses, pump, foam concentrate or monitors which can also be used to compliment fixed and semi-fixed fire fighting facilities.

3.10 Fire rating

The minimum fire resistance rating of a material or method of construction as determined by the method acceptable to the relevant local authority.

3.11 Fire wall/compartment

A wall or other barrier constructed and placed with the objective of preventing the spread of fire from any one place to some other place.

Fire compartment consisting of wall, floor and ceiling which are provided for the purpose to minimise the risk of spread of fire by the provision of a stable and durable form of construction.

3.12 Flammable liquid

Any liquid, or mixture of liquids, or liquids containing solids in solution or suspension (e.g. paints, varnishes, lacquers, but not including substances otherwise classified on account of their other more dangerous characteristics) having a flash point of not more than 150 °C.

3.12.1 Categories of flammable liquids

A flammable liquid is classified in one of the following four categories in accordance to United Nations Globally Harmonized System of Classification and Labelling of Chemicals (GHS):

a) Category 1: A liquid having a flash point < 23 °C and initial boiling point ≤ 35 °C.

b) Category 2: A liquid having a flash point < 23 °C and initial boiling point > 35 °C.

c) Category 3: A liquid having a flash point ≥ 23 °C and ≤ 60 °C.

d) Category 4: A liquid having a flash point > 60 °C and ≤ 93 °C.

Liquids with flash point more than 93 °C and up to including 150 °C shall comply with the requirements of Category 4 unless waived by the relevant local authority.

3.13 Flash point

The lowest temperature (corrected to a standard pressure of 101.3 kPa) at which the application of an ignition source causes the vapour of a liquid to ignite under specified test conditions.

3.14 Foam

A stable aggregation of small bubbles, whose properties are such that it may be used as a flame-smothering blanket, or to prevent the entry of air, or to suppress vapour.

3.15 Foam concentrate

A concentrated liquid foaming agent, which is the basis from which foam is generated.

3.16 Foam solution

Water into which foam concentrate has been introduced in the correct proportions for the generation of foam.

3.17 GHS

The Globally Harmonized System of Classification and Labelling of Chemicals (GHS) is the culmination of work from a wide range of expertise, and co-ordinated and published by the United Nations Economic Commission.

GHS provides harmonized criteria for classifying chemicals according to their health, environmental and physical hazards; and harmonized hazard communication elements, including requirements for labelling and safety data sheets.

3.18 Hazard labelling

3.18.1 Hazard symbol and hazard pictogram

The GHS hazard symbol of "Flame" for the "Flammable Liquids", shown below should be used as one part of hazard pictogram for the storage facility as practicable as possible.



The hazard pictogram shall consist of the symbol coloured in black on a white background and with a red frame. The complete hazard pictogram using the hazard symbol is shown below (NOTE – GHS pictogram could be downloaded from http://www.unece.org/trans/danger/publi/ghs/pictograms.html).



The Hazard symbol is used for Category 1, 2 and 3 flammable liquids. Category 4 flammable liquid needs not use the symbol.

	Category 1	Category 2	Category 3	Category 4
Hazard pictogram				No need

3.18.2 Hazard signal word

A hazard signal word means a word used to indicate the relative level of severity of hazard and alert the users to a potential hazard on the hazard labelling.

	Category 1	Category 2	Category 3	Category 4
Hazard signal word	Danger	Danger	Warning	Warning

3.18.3 Hazard statement

A hazard statement is a phrase assigned to a hazard class and category that describes the name of the hazard of a hazardous product, including, where appropriate, the degree of hazard.

	Category 1	Category 2	Category 3	Category 4
Hazard statement	Extremely flammable liquid and vapour	Highly flammable liquid and vapour	Flammable liquid and vapour	Combustible liquid

3.18.4 Hazard precautionary statement

A hazard precautionary statement is a phrase, which describes recommended measures that should be taken to minimise or prevent adverse effects resulting from exposures to a hazardous chemical, or improper storage or handling of hazardous chemical.

Four types of precautionary statements covering "Prevention", "Response", "Storage" and "Disposal" should be considered as far as possible to each GHS hazard statement and type of hazard.

General guides for the precautionary statement of the four types are listed in Table 1 as reference:

Table 1 – Hazard precautionary statement

Category	Hazard precautionary statement			
	Prevention	Response	Storage	Disposal
1, 2 and 3	▪ Caution on flammable liquid storage. ▪ Caution on fire hazards. ▪ Caution against unauthorised access. ▪ keep ignition sources such as heat/sparks/open flame away from storage – "No smoking" ▪ Wear PPE/protective gloves/eye, face protection (as specified by the manufacturer/supplier or the competent authority). ▪ Ground or bond container and receiving equipment if dealing with electrostatic sensitive material. ▪ Use explosion-proof electrical/ventilating/lighting/ equipment. ▪ Take precautionary measures against static discharge. ▪ Use only non-sparking tools.	▪ In case of fire, use appropriate media for extinction. ▪ Do not use water (if water increases risk). ▪ If splash on skin/body: Remove immediately all contaminated clothing. Rinse skin with water/shower.	▪ Store container in cool/well-ventilated place. ▪ Keep container tightly closed.	▪ Dispose of contents/container to ... in accordance with local/regional/national/ international regulation (to be specified)
4	▪ Wear protective gloves and eye/face protection (as specified by the manufacturer/supplier or the competent authority). ▪ Keep away from flames and hot surfaces.	▪ In case of fire, use appropriate media for extinction. ▪ Do not use water (if water increases risk). ▪ If splash on skin/body: Remove immediately all contaminated clothing. Rinse skin with water/shower.	▪ Store container in cool/well-ventilated place. ▪ Keep container tightly closed.	▪ Dispose of contents/container to... in accordance with local/regional/ national/ international regulation (to be specified)

3.19 Ignition source

A source of energy sufficient to ignite a flammable atmosphere and includes, but not limited to, naked flames, exposed incandescent material, electrical welding arcs, and electrical or mechanical equipment not approved for use in hazardous locations.

3.20 Installation

All the facilities on a site within the boundary used for storing or handling flammable liquids.

3.21 Liquid

Any material which has a fluidity greater than that of 300 penetration asphalt when tested in accordance with ASTM D5.

3.22 Masonry

Stone, brick, solid concrete block or similar building material or a combination of same, laid up unit-by-unit and set in mortar.

3.23 Minor storage

The storage of flammable liquids, in various locations, in quantities conforming to the criteria specified in this standard (see Table 2).

3.24 On-site facility

Any facility that processes, stores or handles flammable liquids inside the boundary of the installations, except for those as minor storage (see Figure 1).

3.25 Operations

All activities within a restricted area including operating, cleaning, maintaining, repairing, removing, modifying or extending the equipment or facilities within the area.

3.26 Package

An individual container for liquid of capacity less than 250 L.

3.27 Package store

A safety cabinet, indoor compartment, room, outdoor area, platform, or building that is used for the purpose of storing or handling flammable liquids in packages.

3.28 Permit-to-work

A written document which specifies conditions under which work that otherwise would be potentially hazardous may be carried out.

3.29 Piping

An assembly of pipes, hoses, valves, fittings and associated appliances.

3.30 Plant

An integrated process unit or that portion of such a unit where flammable liquids are stored, produced, processed or used in chemical processes.

3.31 Product

A mixture of flammable liquid with at least 10 % of solid material such as resins, waxes or pigments, and including paints, lacquers, polishes and adhesives.

3.32 Protected places (see Figure 1):

Any of the following:

a) A residential building, place of worship, public building, school or college, hospital, theatre, factory, workshop, office, store, warehouse, laboratory, shop or any building in which persons are accustomed to assemble whether it is within or outside the boundary of the installation; or

b) A ship lying at permanent berthing facilities.

3.33 Restricted area

An area to which access is limited to persons authorised by the occupier.

3.34 Tank

A container for the storage of liquid of capacity of 250 L and above.

3.35 Tank vehicle

Any tank truck, tank trailer or semi trailer, or any rail tank car.

3.36 Transit storage

The storage of flammable liquids where such liquids are intended for further transport to another location. Transit storage shall be pre-approved by the authority before it is allowed to be used (see Figure 1).

3.37 Unstable liquid

A liquid that, in the pure state or as commercially produced or transported, will vigorously polymerise, decompose, undergo condensation reaction, or become self-reactive under conditions of shock, pressure, or temperature.

3.38 Vapour barrier

A wall or other barrier constructed and placed with the object of preventing the passage of vapour from any one place to another.

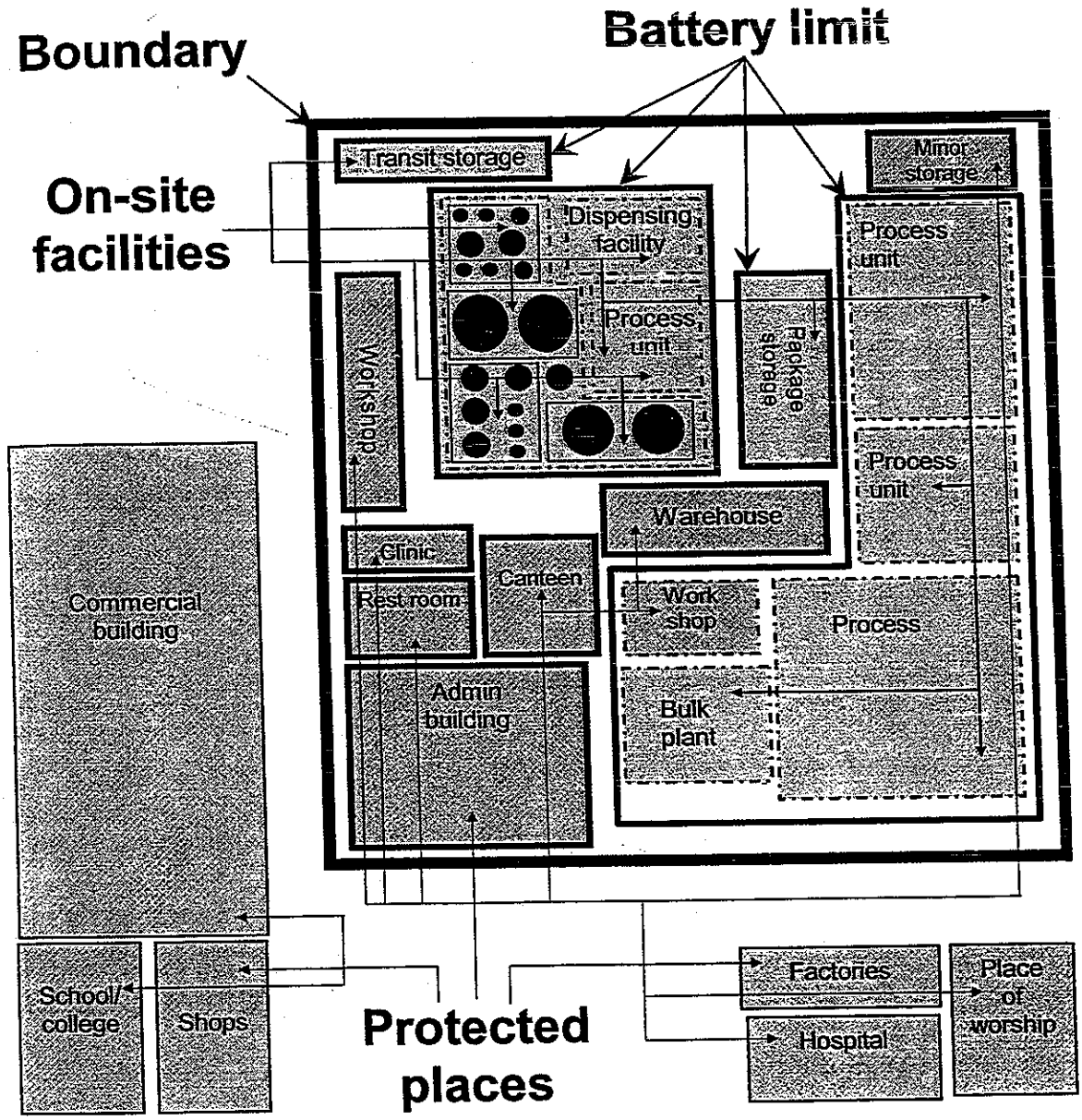

Figure 1 - Illustration of site definitions

4 Minor storage

4.1 Application

Any storage of flammable liquids in quantities not exceeding those listed in Table 2 shall be classified as being minor storage and are exempted from other clauses of this standard unless otherwise specified.

The underlying concept of this clause is that quantities below a certain level are so small, or are so scattered and separated, that they present no real hazard, add little to a building's fire load, and are generally unlikely to play a significant part in spreading a fire from place to place. The fire-fighting facilities required under normal building regulations are expected to cope adequately. For certain industrial or commercial premises, workplace safety regulations or guidelines may apply even to quantities defined as minor in this standard.

4.2 Precautions for minor storage

The following precautions shall be observed for any minor storage within the scope of this clause:

a) The storage shall not be in proximity to heating or an ignition source, e.g. a stove, heating appliance, light switches, welders, or similar ignition sources.

b) Containers shall be kept closed when not in use. Any action to open a package of flammable liquid or decant from it shall be carried out in a well-ventilated area, and away from any potential source of ignition.

c) The transportation of flammable liquid from storage to the point of use shall be carried out in a manner that minimises the possibility of spillage or fire.

d) Liquids shall not be stored or used where they may jeopardise escape from a building in the event of fire.

e) Persons who handle all categories of flammable liquids shall be aware of the hazards involved.

f) Any spillage shall be cleaned up immediately and the materials used in the clean-up shall be disposed of safely in accordance with any relevant local regulations and not into the public sewer system.

g) Any materials that might interact dangerously if mixed shall be kept apart so that the possibility of interaction is minimised, e.g. fuel and pool chlorine.

h) Containers used shall not be pressurised as a means to transfer the contents unless specifically designed for this duty.

i) Concentrated storage of flammable liquids in any one area shall be avoided, so as to reduce the fire load and the potential rate of fire spread.

NOTE – Decanting and pouring of small quantities of flammable liquids can generate a static spark of sufficient energy to ignite a flammable vapour-air mixture.

Table 2 – Minor storage

Location	Maximum capacity of liquid storage, in litre (L)			
	Category of liquids stored			
	Category 1 & 2	Category 3	Category 4	Mixed Category (see Note 6)
Residential buildings of any type (i) Indoor	5L	10L	20L	20L
(ii) Outdoors in a shed or garage, away from the Boundary by 1.5 m in separation	10L	20L	40L	40L
Institutions Examples: Educational establishments, clinics, hospitals, day care centre, kindergartens, homes for aged and orphanages.	(i) 5 L or (ii) 0.1 L/m^2 (See Note 5) and not more than 10 L per minor storage area	(i) 10 L or (ii) 0.25 L/m^2 (See Note 5) and not more than 25 L per minor storage area	(i) 20 L or (ii) 0.5 L/m^2 (See Note 5) and not more than 50 L per minor storage area	(i) 20 L or (ii) 0.5 L/m^2 (See Note 5) and not more than 50 L per minor storage area
Offices Examples: Commercial buildings Shops Examples: Shopping centres, showrooms, supermarkets, departmental stores, beauty salons, pawnshops, etc Place of Public Resort Examples: Hotels, cinemas, private clubs, eating houses, restaurants, hawker centres, public swimming complex, etc Storage Examples: Godowns, warehouses, stores, etc Laboratories	(i) 5 L or (ii) 0.2 L/m^2 (See Note 5) and not more than 20 L per minor storage area	(i) 10 L or (ii) 0.5 L/m^2 (See Note 5) and not more than 50 L per minor storage area	(i) 20 L or (ii) 1.0 L/m^2 (See Note 5) and not more than 100 L per minor storage area	(i) 20 L or (ii) 1.0 L/m^2 (See Note 5) and not more than 100 L per minor storage area
Factories	(i) 10 L or (ii) 0.5 L/m^2 (See Note 5) and not more than 50 L per minor storage area	(i) 20 L or (ii) 1.0 L/m^2 (See Note 5) and not more than 100 L per minor storage area	(i) 50 L or (ii) 2.0 L/m^2 (See Note 5) and not more than 200 L per minor storage area	(i) 50 L or (ii) 2.0 L/m^2 (See Note 5) and not more than 200 L per minor storage area

NOTE 1 – The above Table 2 for minor storage is intended to cater for the normal need of working stock. Should these quantities be exceeded, it will be necessary to store them in safety cabinet(s) specified in 6.5. Another alternative is to explore the package storage in Clause 6.

NOTE 2 – Laboratory operators are strongly advised and encouraged to minimise their amount of flammable liquids (materials) on benches by returning them to chemical store or safety cabinets when the materials after use are not needed for the day. The quantity of these materials placed on laboratory benches and fume cupboards shall not exceed 10% of the total storage capacity within the laboratory computed for storage.

Materials used for running and operating laboratory analytical instruments, such as High Performance Liquid Chromatography (HPLC) and distillations, or other work-in-progress which may require other quantities of solvents to operate are exempted from the 10% limitation.

NOTE 3 – All containers shall have airtight lids and shall be compatible with the contents stored. Maximum container capacity for each category storage shall be as follows:

- Category 1 and 2 - 5 L
- Category 3 - 10 L
- Category 4 - 25 L

NOTE 4 – Products with 93 °C< Flash point < 150 °C shall comply with the requirements of Category 4.

NOTE 5 – The storage density (L/m^2) is per designated minor storage area defined by the user.

NOTE 6 – For mixed category storage, the individual category storage limits shall not be exceeded.

4.3 Separation distance for minor storage

Where there is more than one minor storage within the same boundary, the minimum separation distances among the minor storages, boundary/on-site facility/protected places and any fire rated wall shall conform to the following (distance shall be measured from the outermost package/container in the minor storage) (see Figure 2):

a) The minimum separation distance between two indoor minor storages shall be 10 m for a non-sprinkler protected area and 7.5 m for a sprinkler protected area.

b) The minimum separation distance between an indoor minor storage and a safety cabinet shall be 5 m for a non-sprinkler protected area and 3 m for a sprinkler protected area.

c) The minimum separation distance between an outdoor minor storage and the boundary/on-site facility/protected places shall be 1.5 m. Separation distance between two outdoor minor storages shall be 7.5 m.

NOTE – Placing more than one outdoor minor storage is not encouraged as they pose higher fire risk.

d) The minimum separation distance between an indoor and outdoor minor storages shall be 5 m. If they are separated by a 2-hour fire rated wall capable of preventing the spread of fire, the separation distance may be measured in a horizontal plan around the end of the wall which intervenes.

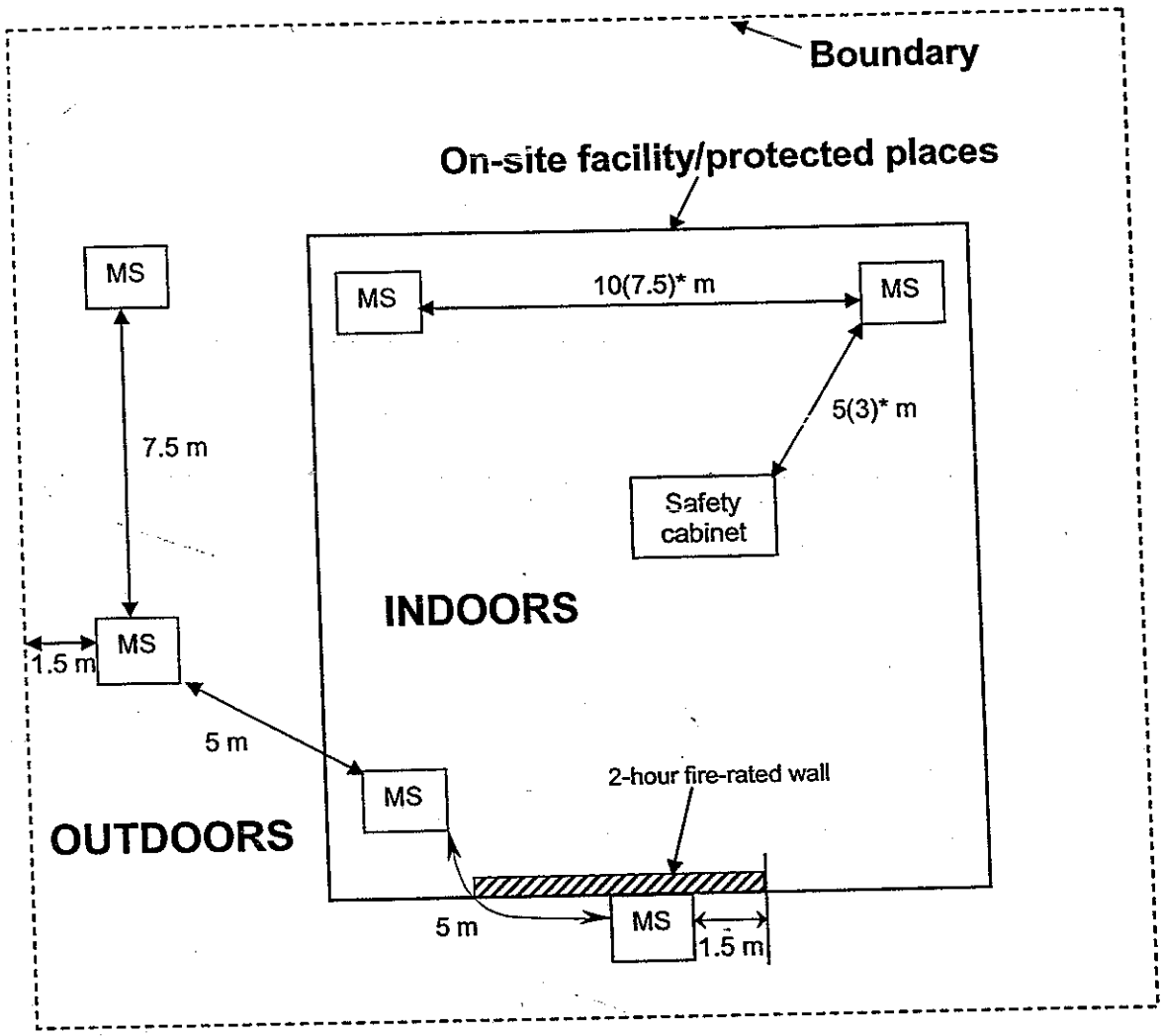

NOTE – MS refers to minor storage
*(separation distance for sprinkler protected building)

Figure 2 – Separation distances between minor storages

5 General requirements for package and tank storage

5.1 Application

This clause provides general requirements and recommendations that apply to package or tank storage other than those dealt with in Clause 4, minor storage.

5.2 General design

5.2.1 Design safety and suitability

Any installation shall be so designed and constructed as to be safe and suitable for the conditions of use. Factors requiring consideration shall include:

a) Working pressures and structural stresses;

b) Heat, corrosion, or attack by the liquid being handled;

c) Design of plant, equipment, and operating methods to minimise fire and accident risks and the possibility of errors or misunderstanding by staff;

d) Specific design for emergencies, particularly fire-fighting facilities;

e) The need for identification of the function of every valve, switch or control actuator, including any remote switch or actuating device;

f) Safe entry to and exit from all working locations;

g) Ventilation for vapour dispersal, taking into account the possible effect of nearby structures, excavations, embankments, and the like;

h) Identification of and attention to points of vapour relief;

i) Avoidance of contamination of soil and water and public sewer system; and

j) The design of any installation shall be undertaken with the following three principles in mind:

   1) The avoidance of ignition sources;

   2) The separation of potential hazards; and

   3) The avoidance of flammable concentration, by the enclosure of the vapour source, or by ventilation to dilute concentrations to a safe level.

5.2.2 Emergency provisions

An installation shall be designed to facilitate the management of an emergency, taking into account the nature and quantity of the liquids stored, the layout of the storage area, access through or around walls or other barriers, the type of construction of any buildings, and the type and means of operating any fire protection system.

5.2.3 Minimization of vapour hazards

Where a flammable liquid is being used or transferred in such a manner that vapour is released, the ventilation, extraction, or dispersal provisions shall be sufficient to maintain exposure levels below the exposure standards set out in the national workplace regulations.

5.2.4 Transit storage

For the purposes of this clause, areas which are used for the transit storage of flammable liquids, shall be separated from other on-site facilities, protected places or boundary such as storages, buildings, amenities or boundary line by 15 m. The separation shall be at least 7.5 m away from any boundary facing the road as shown in Figure 3.

Flammable liquid held in transit storage shall comply with the following requirements:

a) The aggregate quantity of all flammable liquids held in each transit storage area shall not exceed 240 m^3.

b) Parcels in Intermediate bulk container in transit storage area shall:

1) not exceed 24 m^3 for each parcel and stacked not more than 2 parcels height;

2) be accessible from at least 2 sides; and

3) be separated by at least 2 m.

c) Freight, ISO or tank containers containing flammable liquids in a transit storage area shall:

1) not be stacked more than two containers high and two containers depth and provided access is available from both sides; and

2) be separated by at least 4 m.

d) Parked road tankers loaded with flammable liquids shall be separated from each other by at least 3 m. Road tankers shall be parked so that they can be driven out of the transit storage site without recourse to reversing.

e) The spillage catchment and clean-up facilities of the site shall be capable of handling at least 25 % of the total capacity of the storage tank or package in the area.

f) Access and escape routes shall be clearly demarcated and kept free from obstruction.

g) Adequate fire-fighting facilities shall be provided.

5.2.5 Alterations, repairs or changed site conditions

Any alterations, extensions or repairs to, or removal from, any installations shall not contravene this standard, nor render the installation hazardous or otherwise unacceptable to the authority.

Any repairs shall be carried out to a standard not less than the standard of the original installation.

The continued safety of an installation following completion and hand over is generally held to be the responsibility of the occupier.

5.2.6 Electrical wiring and equipment

Electrical wiring and equipment located in each hazardous or potentially hazardous zone as defined in NFPA 70 or SS 254 shall be listed and marked for installation in the appropriate hazardous zone.

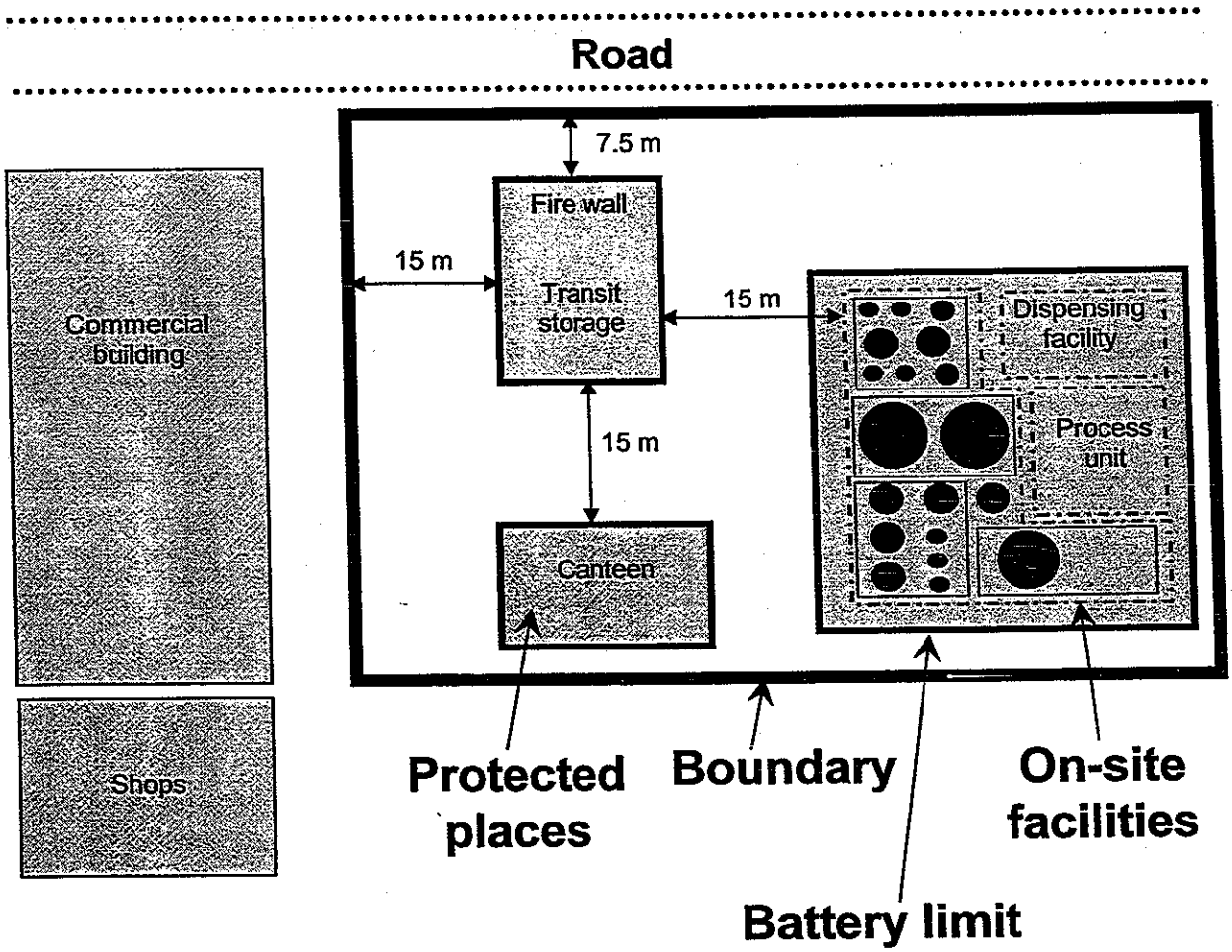

Figure 3 – Transit storage

5.2.7 Illumination

Where natural lighting is inadequate, artificial lighting shall be provided at a level appropriate to the particular activity. For locations involving walkways, fittings, gauges, couplings and emergency equipment, a minimum value of 50 lux is recommended.

5.2.8 Restricted usage

A storage larger than a minor storage shall only contain flammable liquids, unless:

a) such other materials being stored will not react dangerously or be incompatible with the flammable liquids; and

b) prior approval with the regulatory authority has been obtained to store any other dangerous goods.

5.3 Firewalls and vapour barriers

5.3.1 Conditions of use

Separation distances may be measured in a horizontal plane around the end of any vapour barrier which intervenes, provided that:

a) for separation from on-site facilities or from protected places, such a vapour barrier shall also be a firewall; and

b) building walls may be treated as being firewalls or vapour barriers provided that they qualify as such.

Firewalls and vapour barriers may be used to achieve the separation distance in Tables 5, 6, 8 and 9 to boundaries, on-site facilities, protected places and ignition sources.

5.3.2 Construction of firewalls

A firewall shall comply with the following requirements:

a) The fire rating shall be at least 4 hours.

b) The firewall shall be impervious to vapour apart from around approved fire doors.

c) Any firewall that is freestanding shall be self-supporting and shall have adequate foundations.

d) The height shall be sufficient to shield against heat radiation in the event that a potential storage fire becomes a reality, and vice versa.

e) If the fire wall is used to achieve the separation distance requirement for the boundary, approval from the relevant local authority is required.

NOTE – A wall constructed of brickwork, masonry or concrete, 200 mm thick, or reinforced concrete 150 mm thick is deemed to have a 4-hour fire rating.

5.3.3 Construction of vapour barriers

A vapour barrier shall comply with the following requirements:

a) The material shall be impervious to vapour and deemed to be not flammable.

b) The top of the vapour barrier shall be above the height of the hazardous zone.

5.4 Security and hazard communication

5.4.1 Control of access

All storage installations shall be appropriately secured against unauthorised access. Appropriate precautionary statement shall be displayed at entrances of any storage area.

5.4.2 Hazard labelling

The safe use, storage and handling of flammable liquids are dependent upon understanding of:

a) Whether or not there are any dangers associated with the flammable liquids; and

b) The appropriate handling procedures to follow for the flammable liquids.

Hazard labels consist of symbol (therefore symbol pictogram), signal word and hazard statement shall be used as an effective means of communicating hazard information to employees and other workers in the workplace (see Table 3). Hazard labels can be in the form of written, printed, or graphic information, affixed to, printed on package, tank storage, signage in and around the accesses to these areas as practical as possible.

Example of hazard label for a tank storing Category 2 flammable liquid:



5.4.3 Hazard communication

Hazard communication is an important means of bringing in awareness and therefore enabling the right practices in users and consumers when handling flammable liquids in storage.

The introduction of precautionary statements in the workplace by either displaying them as signage or communicating them during training will reinforce safe handling of flammable liquids during storage. Easy reading in plain language is essential to convey information on precautionary measures. A list of precautionary statements for prevention, response, storage and disposal are in 3.18.4 for reference. It is not necessary to have identical sets of words in all situations.

5.4.4 Signs and notices construction

Such signs and notices shall be designed and constructed in accordance with the appropriate standards (see SS 508).

Table 3 – Illustration of flammable liquids labelling

Flammable liquid category	Criteria	Hazard communication elements	
1	Flash point < 23 °C & initial boiling point ≤ 35 °C	Symbol	
		Signal word	Danger
		Hazard statement	Extremely flammable liquid and vapour
2	Flash point < 23 °C & initial boiling point > 35 °C	Symbol	
		Signal word	Danger
		Hazard statement	Highly flammable liquid and vapour
3	Flash point ≥ 23 °C & ≤ 60 °C	Symbol	
		Signal word	Warning
		Hazard statement	Flammable liquid and vapour
4	Flash point > 60 °C & ≤ 93 °C	Symbol	No symbol used
		Signal word	Warning
		Hazard statement	Combustible liquid

6 Package storage and handling

6.1 Application

This clause applies to any installation in which packages of flammable liquids may be stored, or may be involved in filling, decanting, or cleaning, in quantities in excess of minor storage as described in Clause 4.

6.1.1 Package storage types and details

This clause deals with the following types of package store and variations or combinations of them:

a) External detached store without walls other than a bund, whether roofed or not (refer to Figures 4 (a) (i), (ii), (iii)).

b) External detached store with one or more sides attached to building. The store having only outside entry and no internal access to the associated building (refer to Figure 4 (b)).

c) External attached store, sharing a wall or walls with the associated building and with a connecting fire door between the store and the associated building (refer to Figures 4 (c) (i), (ii)).

d) Internal store, being an enclosed store room with walls or compartment wholly within a building (refer to Figures 4 (d) (i), (ii)).

e) Fire separated stores, being grouped stores with no internal access between adjacent storages (refer to Figure 4 (e)).

f) A safety cabinet located within a building or located outside a building as an outdoor storage.

g) Facilities for the holding of materials awaiting use in a process, machine or the like.

h) Other variations of types (a), (b), (c) or (d) above include:

   1) stores with facilities for filling, decanting and cleaning of packages; and

   2) stores either at ground level or on a platform (refer to 6.2.4); or

   3) a combination of both.

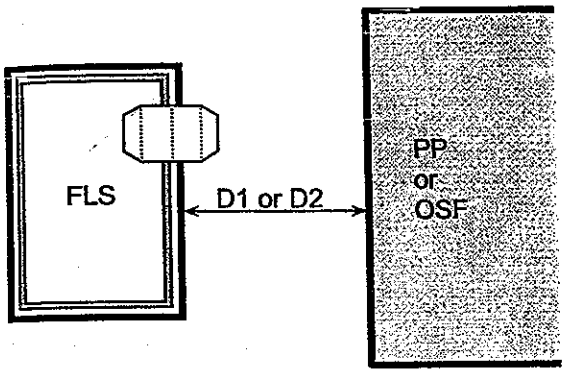

Figure 4(a) (i)

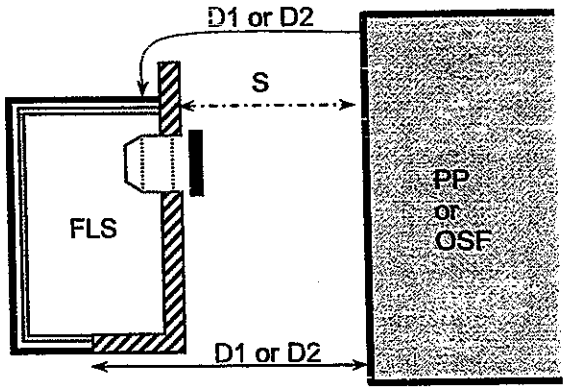

Figure 4(a) (ii)

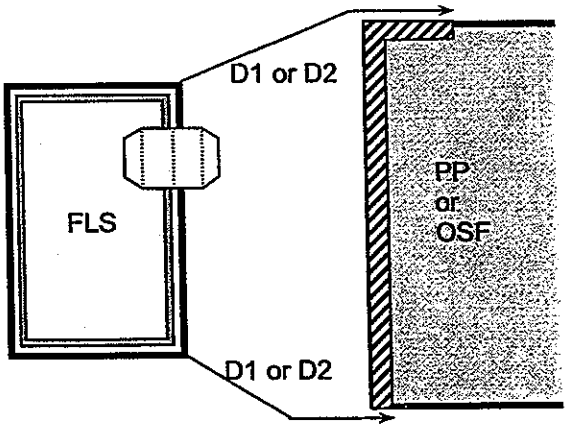

Figure 4(a) (iii)

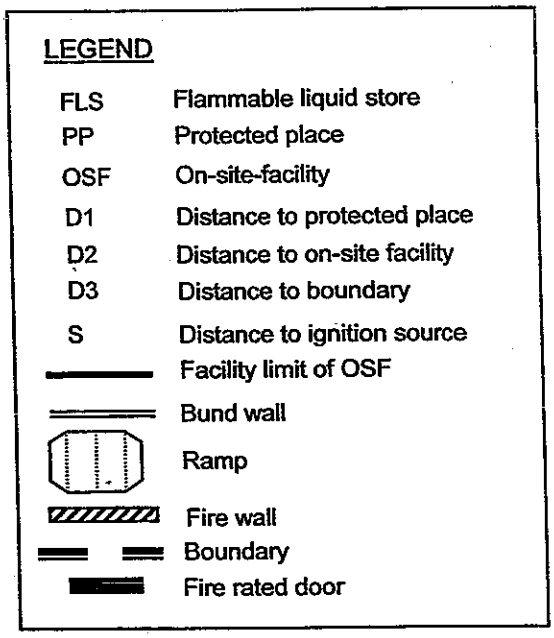

Figure 4(a) – Typical package stores – External detached store without wall

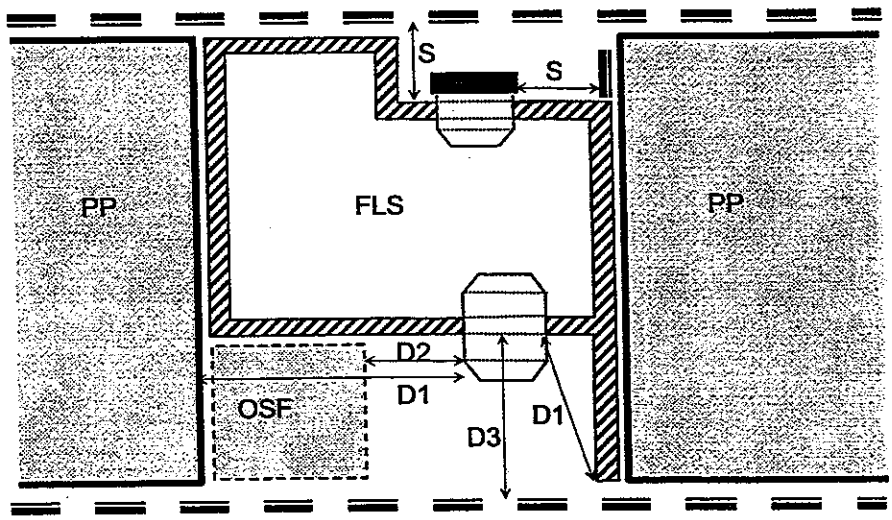

Figure 4(b) – Typical package stores – External detached store with wall(s)

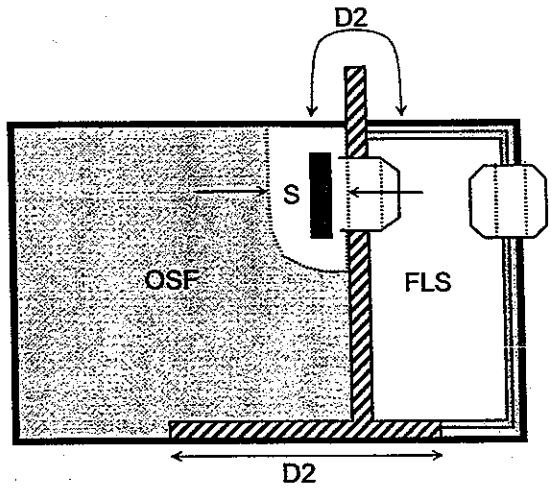

Figure 4(c) (i)

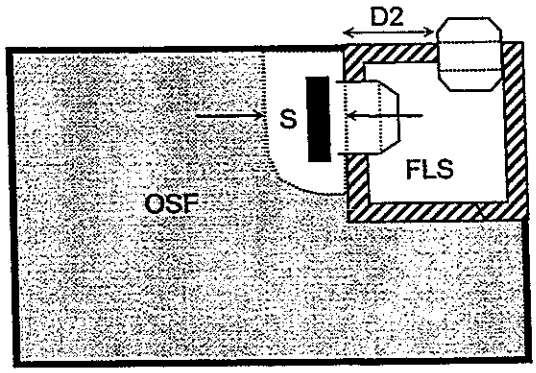

Figure 4(c) (ii)

Figure 4(c) – Typical package stores – External attached store sharing wall(s).

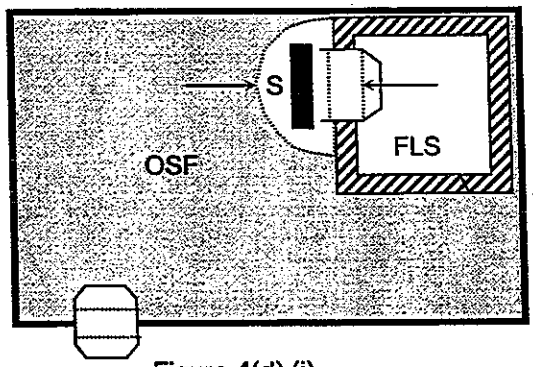

Figure 4(d) (i)

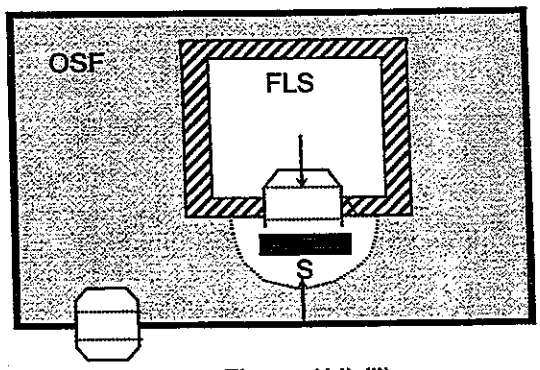

Figure 4(d) (ii)

Figure 4(d) – Typical package stores – Internal store

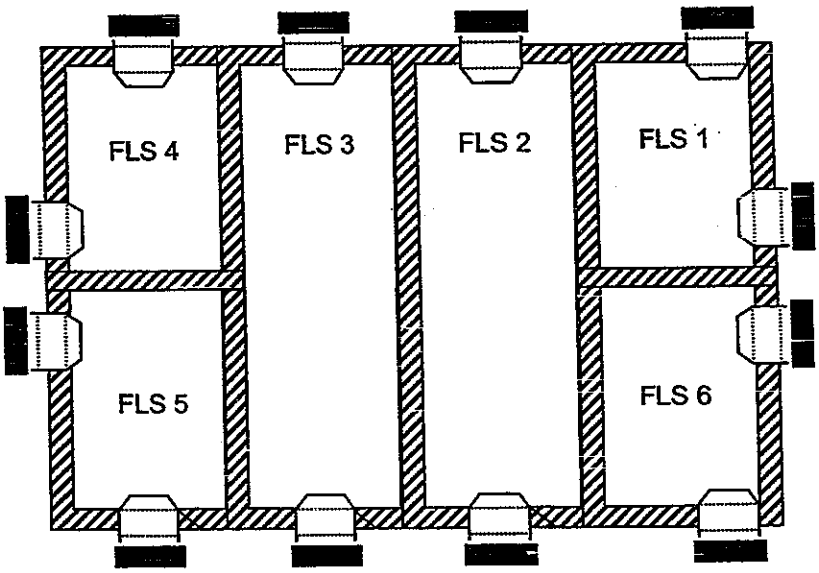

Figure 4(e) – Typical package stores – Fire separated stores

6.2 General

6.2.1 Restricted usage

Any package storage area shall be restricted to the storage of flammable liquids unless:

a) specific approval is given for the storage of other products;

b) such other products are compatible; and

c) specific approval is given for the filling, decanting, cleaning and painting of packages and subject to any additional specific requirements.

NOTE – Unstable liquid such as oxidizing agents, peroxides that are spontaneously flammable, or may give rise to spontaneous reactions with other materials are outside the scope of this Singapore Standard and shall be referred to the relevant local authority.

6.2.2 Location

The location of any such storage facility, except storage in safety cabinets shall be located at the ground floor or level where directly linked to the fire engine access road. The selection of the location shall consider the following:

a) Separation from other activities, buildings, public places, or other property or persons.

b) Separation from possible ignition sources.

c) Ventilation to ensure dispersal of vapours.

d) Precautions against toxic hazards.

e) Control of spillage and drainage from the area.

6.2.3 Spillage control

The floor within the compound shall make provision for any spillage and minimise the spread of fire to other pile or racking.

Provision shall be made to contain any leakage or spillage from the packages, and to prevent it from contaminating surrounding soil or from entering the public sewer system or any drainage system other than one intended specifically for its drainage and collection.

Control shall be by a spill containment compound or the equivalent. Spilled liquid shall be contained by the spill containment compound or via drainage channels to a separate spill containment compound, a drainage tank, or pit.

The capacity for such a spill containment compound shall be not less than 100 % of the largest package plus 25 % of the storage capacity up to 10,000 L, and plus another 10 % of the storage capacity if beyond 10,000 L.

An example on the calculation of the capacity of spill containment compound is as follows: A package storage consists of 100 containers of 20 litre each and 55 drums of 200 litre each.



20 litres containers X 100

Containers consisting of 20 litres each

200 litres drums X 55

Largest package having a capacity of 200 litres

Total compounding capacity = 100 % of the largest package + 25 % of the storage capacity (up to 10,000 L) + 10 % of the storage capacity beyond 10,000 L
= (200 + 2500 + 300) litres
= 3000 litres

Therefore, the required capacity for the spill containment compound is 3000 litres.

If an automatic or manual fire suppression system using water is installed for the package storage, the spill containment compound capacity shall be increased by a volume equal to the water output of the fire suppression system over 20 min.

Any drainage system shall be capable of carrying the water output of the fire suppression system over the spill containment compound at the design density of discharge.

Any drainage system carrying liquid of the spill containment compound to outside of the property shall incorporate an interceptor appropriate to the product. The interceptor shall be readily accessible for inspection, located outside the compound, and so arranged to separate pollutants from the carrier liquid and prevent contamination of drains, natural watercourses and the sewer. The final drain pipe with an isolation valve (always be closed) leading directly to the open drain shall be provided to allow fire fighters to facilitate during emergency.

Where more than one package stores are connected to a common spill containment compound (could be a drainage tank or pit), the capacity of the common spill containment compound shall be equal to the largest package store's spill containment compound plus 25 % of the total volume of the remaining package stores' spill containment compounds.

NOTE – Fire water run-off containment shall be provided in accordance to the Code of practice on pollution control.

6.2.4 Platform

Platforms, e.g. loading docks, may be:

a) concrete deck on solid fill or on concrete supports; or

b) timber deck on steel, concrete or masonry posts or framework.

Any storage platform with underdeck space (except for solid fill platforms) shall be provided with underdeck ventilation. The timber decking shall be laid with a 5 mm gap between planks, or shall incorporate equivalent drainage holes.

6.2.5 Ventilation

Ventilation shall be provided to prevent the accumulation of vapour within the compound area of the indoor storage. Adequate natural or mechanical ventilation shall be provided for each package store. It shall be sufficient to maintain the ambient concentration of flammable vapours to below the lower explosive limit (LEL).

Package stores ventilated in accordance with the following requirements are deemed to comply with this clause:

a) A natural ventilation system that complies with 6.4.6.2.

b) A mechanical ventilation system that complies with 6.4.6.3.

6.2.6 Vent protection

Any vent opening inside a package store shall be provided with a barrier where necessary to prevent blockage by stored packages.

Where a vent passes through a cavity wall, or where the wall is made of cavity bricks or blocks, a metal sleeve shall be provided to prevent leakage of vapour into the cavities.

6.2.7 Equipment

All equipment installed within or adjacent to the facility shall be of a type suitable for the purpose and location, having regard to the class of liquid being handled.

6.2.8 Control of access

Security measures and means for controlling entry to a storage area shall be provided.

6.2.9 Distance to fire engine access road

The distance between the most remote points of any package in the storage area shall not exceed 60 m to the nearest fire engine access road for external storage and shall not exceed 45 m for indoor storage.

6.2.10 Notices

The precautionary statements in 3.18.4 shall be referred to as notices.

6.3 Outdoor package stores

6.3.1 Separation distances

When choosing the location for a package store, the surrounding factors such as the nearby on-site facility/protected places, fire fighting access and capability must be taken into consideration. Equally important is the likely volume and category of packages to be stored, which will have the most to decide the safety separation distances.

6.3.1.1 Groups of packages

Table 4 classifies groups of flammable liquid based on their maximum allowable quantity for any single pile of package with respect to the various categories of flammable liquids.

Table 4 – Maximum allowable quantity (MAQ) in m^3 for groups of packages

Groups of packages	Category 1 & 2	Category 3	Category 4
Group A	0.1 to 2	0.5 to 8	2.5 to 29
Group B	4 to 8	15 to 30	40 to 100
Group C	10 to 50	40 to 150	140 to 520
Group D	60 to 120	180 to 300	640 to 1500

6.3.1.2 Protected places/on-site facility

Table 5 sets out the minimum separation distances between Group (of flammable liquids) and any on-site facility/protected places.

Table 5 – Separation distances for groups to protected place (D1)/on-site facility (D2)

Groups of packages	Maximum capacity m^3 (kilo-Litre)			Minimum separation distance (D1/D2) m
	Category 1 and 2	Category 3	Category 4	
Group A	0.1	0.5	2.5	Unrestricted
	1	4	10	3
	2	8	20	4
Group B	4	(15)	40	5
	(6)	(20)	70	6
	(8)	(30)	100	7
Group C	(10)	(40)	140	8
	(15)	(60)	200	9
	(20)	(80)	260	10
	(30)	(100)	340	11
	(40)	(120)	420	12
	(50)	(150)	520	13
Group D	(60)	(180)	640	14
	(70)	(200)	770	15
	(100)	(250)	(1000)	20
	(120)	(300)	(1500)	25

NOTE 1 – The separation distant (D1) refers to the distance between any protected area and top of the inside of the bund wall.

NOTE 2 – The distances applicable for any intermediate capacity may be obtained by linear interpolation.

NOTE 3 – Separation distances may be reduced by the use of firewalls and vapour barriers. See 5.3.

NOTE 4 – In general, the stacking height per pile shall be limited to 3.6 m for Category 1, 2 & 3 flammable liquids and 6.8 m for Category 4 flammable liquids.

6.3.1.3 Boundary/fixed ignition sources

Table 6 sets out the minimum separation distance to any boundary or fixed ignition source.

Table 6 – Separation distances for groups to boundary (D3)/fixed ignition sources (S)

	Minimum separation distance, m (D3/S)							
	Category 1, 2 and 3				Category 4			
Group of package (closed packages) to boundary/fixed ignition source	Gp A	Gp B	Gp C	Gp D	Gp A	Gp B	Gp C	Gp D
	3	5	7.5	15	1.5	3	5	7.5
Group of package (Opened packages - decanting, mixing, dispensing operation) to boundary/fixed ignition source	5	7.5	15	20	3	5	7.5	15

The following provisions are applicable to outdoor package stores including those with a single roof with no wall enclosure:

a) The minimum separation distance of any Group (see Table 4) to an on-site facility/protected places shall be set out in Table 5.

b) The distance between 2 Groups shall have at least half of the minimum separation distance specified in Table 5.

c) The separation distances to any on-site facility shall follow Table 5 but need not exceed 15 m for Category 1 and 2 liquids, 7.5 m for Category 3 liquids, or 3 m for Category 4 liquids.

d) Any small office within the package store area that is used for the direct supervision of the storage is not considered an on-site facility.

e) The distance to any boundary or fixed ignition source, shall be as specified in Table 6.

f) The distance to any tank storage shall be considered as on-site facility.

g) Separation distances shall be measured from the internal perimeter of the bund.

h) Where the internal store has an in-built firewall or vapour barrier, separation distances shall be measured from the nearest potential point of vapour exit, e.g. the outlet of a natural vent or a door.

i) Where a fire door connects a storage area with an associated working area the distance from the fire door to an ignition source shall be not less than as shown in Table 6.

j) Where drainage to a separate spill containment compound (could be drainage tank or sump) is provided as in 6.2.3, it shall be considered as an on-site facility and that the minimum separation distances specified in Table 5 shall be applied.

k) Where two or more separate package stores are located on the same boundary, they may be considered:

   1) separately, provided that they are separated by the separation distances given in Table 6 for the capacity of the greater of the two; and shall not be less than 5 m; or

   2) as the aggregate capacity of the stores.

l) Where flammable liquids of different categories are kept in the one storage area, the distances shall be those for the category with the lowest flashpoint present, but based on the aggregate quantity of all liquids stored. Minor storage quantities are exempted from this requirement.

m) Adjacent package stores separated by 4-hour rated firewalls and fitted with 4-hour rated fire doors with no access between compartments may be treated as individual package stores without aggregation for the purpose of determination of separation distances (see Figure 4(d)).

6.3.2 Use of fire walls and vapour barriers

Separation distances may be measured in a horizontal plane around the end of any vapour barrier, which intervenes, provided that:

a) separation from occupied buildings on the same boundary or from protected places, such a vapour barrier shall also be an approved fire wall;

b) the top of the vapour barrier shall be not lower than the level of the top of the storage; and

c) compliance with (b) above does not result in the vapour barrier being more than 2.5 m high.

6.3.2.1 The storage area shall be graded in a manner to divert possible spills away from buildings or other exposures or shall be surrounded by a kerb at least 15 cm high. When kerbs are used, provisions shall be made for draining of accumulations of ground or rain water or spills of liquids. Drains shall terminate at a safe location and shall be accessible to operation under fire conditions.

6.3.2.2 The storage area shall be protected against tampering or trespassers where necessary and shall be kept free of weeds, debris and other combustible materials not necessary to the storage.

6.3.3 Construction

Any outdoor package store shall be designed and constructed to be adequate for the purpose in accordance with the following requirements, as appropriate:

a) Other than where a fire-rated structure is required, any wall or roof shall be masonry, concrete, or a structure sheeted with non-flammable material, except for any necessary skylights.

NOTE – Non-flammable material on timber frames complies with these requirements.

b) Floors forming part of the spillage catchment system shall be impervious, not liable to degradation or frictional sparking. Suitable materials are concrete and masonry.

c) Platform surfaces shall comply with Item (b). The loading face shall be a vapour barrier up to the deck height, extending the full length of the face, and returning at least 1 m along the side at each end. This requirement may be waived where the platform is not more than 20 m^2 in area and is used for storage of Category 4 liquid only.

d) A safety cabinet complying with 6.5 may be used for outdoor storage, provided that adequate protection against weather, corrosion, and traffic damage is provided.

6.4 Indoor package store

6.4.1 Application

Any indoor package store shall comply with 6.4.2 to 6.5.7 in addition to the applicable general requirements of 6.2.

NOTE – Because 6.4 deals with indoor package storages, possibly located within a building which would normally be considered a protected place, it incorporates a number of precautions necessary to protect both the building and the storage. Therefore separation distances such as those of 6.3.1 cannot validly be applied.

6.4.2 Location

Unless specifically approved otherwise, all indoor package stores except if the flammable liquid is stored in safety cabinets shall be located on the ground floor or level directly accessible from street level, site roadway or fire engine access road for direct loading/unloading and fire fighting purposes.

a) An installation at the level of a loading dock will be deemed to comply with this requirement. Care shall be taken to ensure that nearby embankments, excavations, or retaining walls do not interfere with the operation of a natural ventilation system.

b) Where the only means of access to an indoor package store of flammable liquids is through an associated working area that is an on-site facility, the indoor package storage capacity shall be limited to 3,000 L (5,000 L if sprinkler protected). In addition, the travel distance between the external opening and the fire door of the indoor package store shall not be more than 10 m (15 m if sprinkler protected). Each indoor package store shall be a fire compartment and its size to be determined and based on the type of building's fire protection system as specified in Table 7.

Table 7 – Size of indoor package store based on type of fire protection system

Type of fire protection system	Maximum floor area (m^2)
Manual fire alarm system	≤ 50
Automatic fire alarm system	≤ 200
Automatic fire suppression system	≤ 600
Automatic foam suppression system	≤ 900

c) The stacking height of indoor package store shall be based on NFPA 30 and limited to 3.6 m unless the building is protected with fire suppression system designed in accordance to SS CP 52 but maximum height shall not exceed 15 m.

The building in which the indoor package store is located is not considered as on-site facility and therefore 6.2.1 a) and c) shall apply from any vent outlet or doorway in the package store.

6.4.3 Construction

An indoor storage compartment shall be constructed as follows:

a) The walls shall be of masonry or concrete, having a 4-hour fire rating.

b) Floors may be of earth, masonry or concrete. If there is a basement below the ground floor where the store is, the ceiling of the basement shall be of reinforced concrete having a 4-hour fire rating.

c) If the roof of the attached package store is lower than the adjacent building, then it shall be fire rated in accordance with the element of structure for minimum 4-hour rating for two third of the entire roof surface next to the adjacent building or a minimum distance of 5 m measured horizontally from the adjoining wall of the adjacent building, whichever is greater.

d) Any occupancy or usage located above the flammable liquids storage room or compartment shall be separated by a barrier having at least 4-hour fire rating.

e) The external surface of any wall shall be masonry or concrete. Each store is to be separated from other occupancies by a 4-hour fire rated wall having an automatic closing 4-hour fire-rated door with a fusible link or other actuating mechanism. All other exposing walls shall be similarly fire-rated unless the separation distances to boundary line is greater than 15 m.

f) The common walls shall be masonry or concrete with 4-hour fire rating to be separated from other occupancies and 2-hour fire rated door having self-closing device. If the door is to be kept opened due to operational need, the door will have to be automatically closed upon the activation of a local detector (inside and outside) or by the building automatic fire alarm system. All other exposing walls (at least 5 m away from the boundary line) shall be similarly fire-rated unless the separation distances to boundary line is greater than 15 m.

NOTE – Wherever it is safe to do so, a weak panel or joint shall be provided so as to form an explosion relief.

6.4.4 Doors and doorways

Any doorway to a compartment shall be provided with a door, which shall be an outward-swinging, automatic-closing fire door having a minimum fire rating of 2-hour, except that any door that is on the outside wall of a building, subject to the approval of the relevant local authority, may be made of any material faced with non-combustible cladding where:

a) there is no building wall having a fire rating less than 4-hour within 5 m of the opening; and

b) there is no storage of combustible material within 5 m of the opening.

6.4.5 Windows

6.4.5.1 Windows in fire-rated walls

Any window fitted shall be of the same rating as the wall.

NOTE – Except in firewalls, the quality of other doors and windows should be suitable for the intended purpose.

Any window, if such is permitted by the relevant authority shall comply with the following requirements:

a) The window shall be located only in an exterior wall.

b) The window shall not be within 5 m of any construction having a fire rating less than 4-hour.

c) The window shall not be located within 5 m of any combustible material.

Windows that are not required to be fire-rated and that face on-site protected places, protected places or public places, shall have toughened safety glass, safety wired glass or equivalent.

6.4.6 Ventilation

6.4.6.1 General information

Each indoor storage compartment shall be provided with a ventilation system in accordance with the following requirements, as appropriate:

a) Natural ventilation complying with 6.4.6.2 may be used where one wall of the storage compartment is an external building wall and not less than the depth of the storage compartment. The distance between such external wall and its opposite internal wall shall not be more than 5 m.

b) Mechanical ventilation complying with 6.4.6.3 shall be used where an external wall as in (a) above is not available.

Each package store and handling area shall be ventilated in accordance with the following requirements.

6.4.6.2 Natural ventilation

A natural ventilation system shall comprise one of the following as appropriate to the design of the package store:

a) At least two walls completely open to outside atmosphere (see Figure 5(a)).

b) One wall completely open to outside atmosphere, with no other vents, provided that the distance to, and the length of, the opposite wall do not exceed the length of the open wall (see Figure 5(b)).

c) Vents in one external wall, provided that the wall is no less than 6 m long and the opposite wall is not more than 5 m away from it (see Figure 5(c)).

d) One wall open to atmosphere as in b), and vents in one opposite or adjacent wall (see Figure 5(d)).

e) Vents in two opposing walls (see Figure 5(e)).

NOTE – A wall of wire mesh, or of fixed louvres, lattice or the like having at least 75% of its area as openings, would be considered to be completely open.

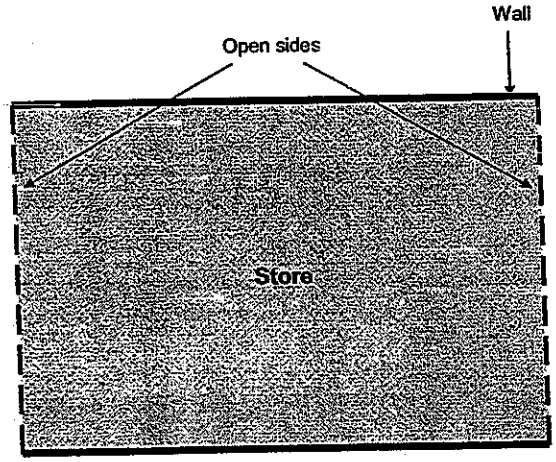

Figure 5(a) – Stores having opposite external sides open

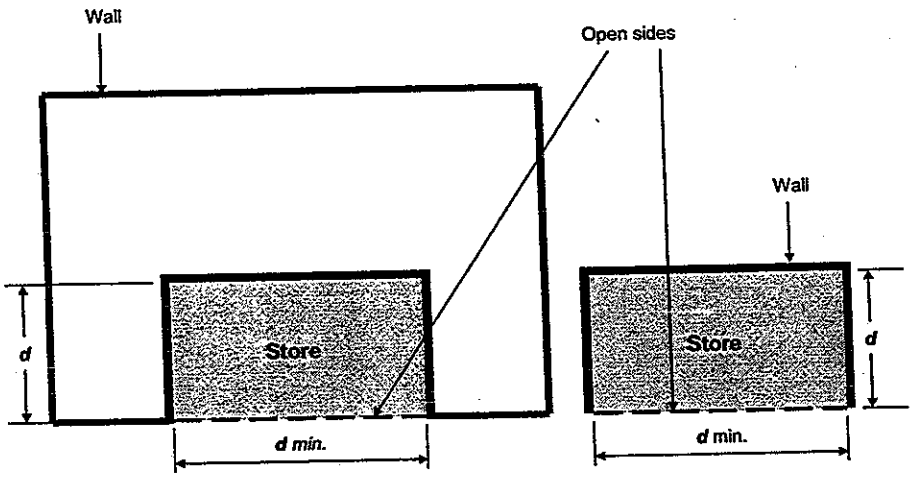

Figure 5(b) – Stores having one external side open

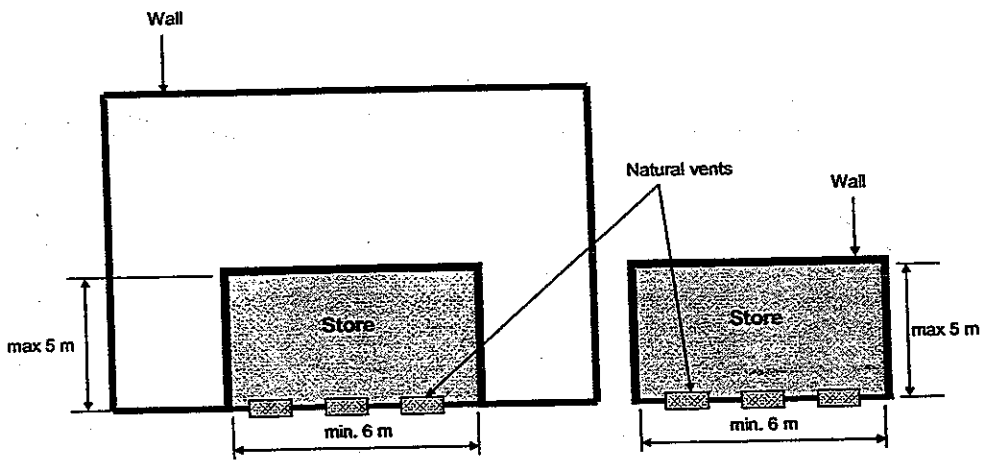

Figure 5(c) – Stores having one external wall with natural vents

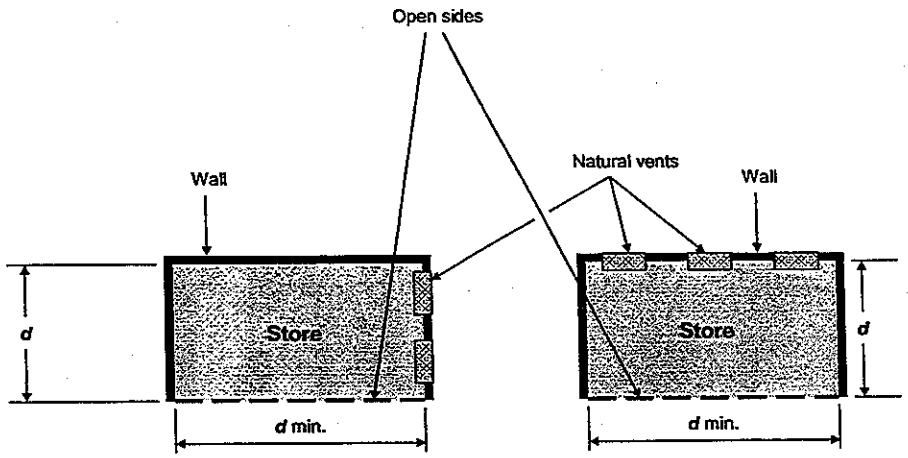

Figure 5(d) – Stores having one external side open and vents in adjacent or opposing external walls

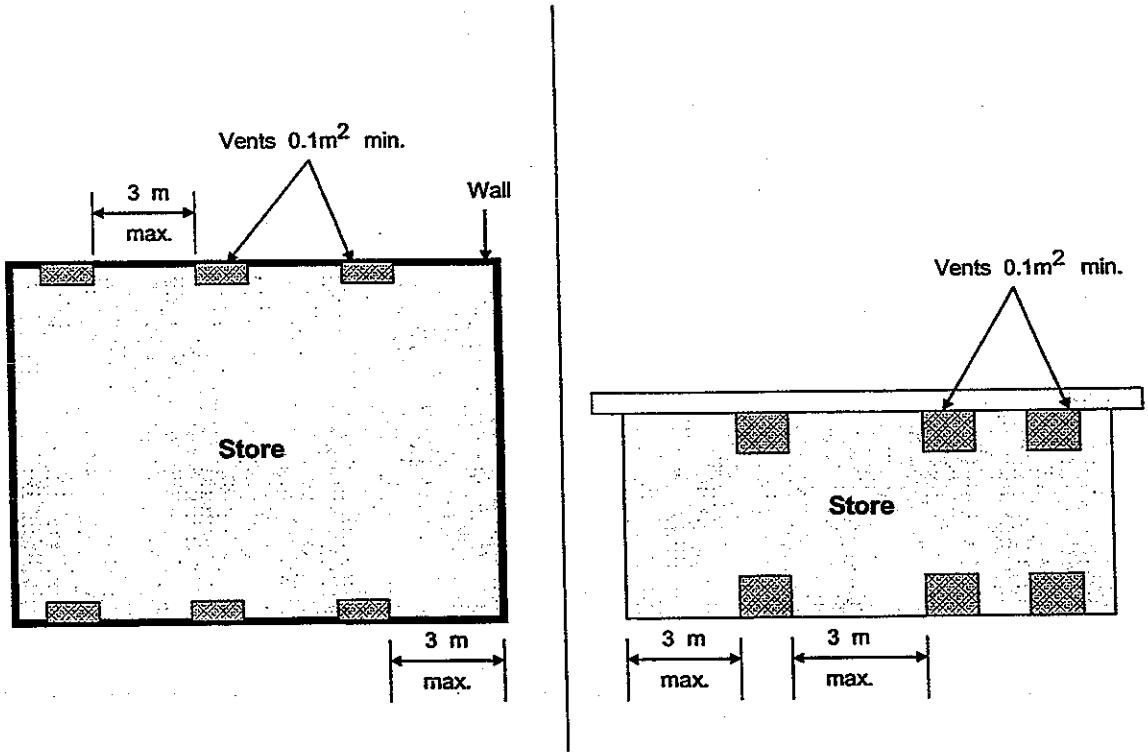

Figure 5(e) – A store having vents in one pair of opposite external walls

A natural ventilation system shall also comprise a pair of vents, one immediately below the ceiling level and the other above the upper limit of the spillage compound. Where vents are required, each vent shall have a net free area of at least 0.1 m^2 but not more than 0.2 m^2, positioned to ensure effective movement of air.

Each vent shall open to atmosphere in an area which has free air movement, and each ventilator pair shall be located as follows:

a) If the compartment has more than one external wall, one ventilator pair shall be located in each 3 m of external wall length.

b) If the compartment has only one external wall, one ventilator pair shall be located in each 1.4 m of external wall length.

c) Where only one ventilator pair is required, it shall be located centrally in relation to the wall length.

NOTE – A larger number of smaller vents may be used provided that the required net free area in relation to wall length is maintained.

Any storage platform except a solid-filled type shall be provided with underdeck ventilation by means of vent openings on opposing sides having an area of not less than 0.1 m^2 for each 1.2 m of length.

6.4.6.3 Mechanical ventilation

Any mechanical ventilation system for package stores containing flammable liquids shall comply with the following requirements:

a) The termination points within the room for both the fresh air supply and the draw-off ducts shall be immediately above the upper limit of the spillage compound and shall be on opposing walls. The distance between any two inlets or any two outlets shall not exceed 5 m.

NOTE 1 – It is recommended that the outlets be located along the longest side of the building to optimise effectiveness.

NOTE 2 – If a single fan system is adopted the fan should be in the exhaust duct.

NOTE 3 – The air supply may be in the form of natural ventilation in an external wall at low level, meeting the requirements of 6.4.6.2.

b) If the ventilation system incorporates fans on both the supply and exhaust ducts, the capacities of the fans shall be so adjusted that the room is under negative pressure.

NOTE – The capacities of the fans on the exhaust ducts should be greater than those on the supply ducts.

c) The system shall be capable of exhausting 0.3 m^3 per square metre of floor area per minute or 5m^3/min, whichever is the greater, and the air velocity at the air supply outlet shall exceed 300 m/min.

NOTE – Vapours from flammable liquids are heavier than air, so the ventilation systems should be designed to scavenge vapours from the lower parts of the store.

d) The system shall be provided with an airflow failure warning device.

e) Any intake or exhaust duct shall terminate in open air at least 2 m from any opening into a building, or 4 m from the outlet of any chimney or flue and 3 m above the ground. The external termination of any inlet duct shall be at least 5 m from the external termination of any exhaust duct.

f) Any duct that passes through a building other than the storage area shall be constructed of or protected by material having at least 3-hour fire rating. A common enclosure may be used for both intake and exhaust ducts.

NOTE – A common enclosure may be used for both intake and exhaust ducts.

g) The ventilation system shall be so designed that it operates:

1) continuously;

2) whenever work is being carried out in the package store; or

3) whenever a person is in the package store.

NOTE – Such mechanical ventilation system shall be back-up with secondary power supply.

h) Fan shall be suitable for hazardous areas. Relevant potential ignition sources, e.g. frictional sparking, static electricity, hot spot, shall be taken into account when selecting and installing fans.

i) Fan blades and nearby components shall be made of materials that have minimal potential for giving off sparks when struck.

NOTE – Materials known to be unsatisfactory are steel with steel, or steel with aluminium or aluminium – magnesium alloys.

6.5 Safety cabinets

6.5.1 Application

Any storage exceeding the minor storage quantities in Table 2 shall be stored in the safety cabinets and comply with the following requirements.

All other classes of dangerous goods as classified in the United Nations Globally Harmonized System of Classification shall not be stored together with flammable materials in the same safety cabinet.

6.5.2 Maximum capacity

Not more than 250 L aggregate of flammable liquid shall be stored in any individual safety cabinet.

The movement of flammable liquid to the designated safety cabinet within a building shall not exceed a capacity of 250 L per trip of delivery.

6.5.3 Safety cabinet construction

The safety cabinet shall be designed and constructed in accordance with acceptable standard, such as Underwriter Laboratory (UL) or Factory Mutual (FM). The cabinet construction shall however be of non-combustible material. These safety cabinets shall be approved and listed by a certified testing laboratory under the national accreditation body or international testing laboratory, such as UL or FM.

6.5.4 Safety cabinet marking

Each individual safety cabinet shall be marked with the maximum capacity to be kept in the cabinet, an appropriate flammable liquid label of at least 250 mm nominal size, and a 'NO SMOKING, NO IGNITION SOURCES' warning sign in lettering of at least 50 mm height.

6.5.5 Safety cabinet separation

The maximum capacity of the liquid stored shall not be more than 2 L per m^2 of tenancy unit area per storey (Tenancy unit refers to an individual unit or subdivided unit within a building of a compartment, and which is managed by a different operator registered with the Registrar of Companies & Business).

The safety cabinets may be located in any level, except basement and meet the following requirements.

6.5.5.1 Non-sprinkler protected area

A group of safety cabinets with a maximum aggregated capacity of 500 L (each safety cabinet not exceeding a capacity of 250 L) shall be separated by a clear distance of 10 m apart between groups.

A group of safety cabinets with a maximum aggregated capacity of 750 L (each safety cabinet not exceeding a capacity of 250 L) is acceptable if a 2-hour fire rated compartment and an external wall with window is provided.

6.5.5.2 Sprinkler protected area

A group of safety cabinets with a maximum aggregated capacity of 750 L (each safety cabinet not exceeding a capacity of 250 L) shall be separated 10 m apart between groups.

A group of safety cabinets with a maximum aggregated capacity of 1500 L (each safety cabinet not exceeding a capacity of 250 L) is acceptable if a 1-hour fire rated compartment and an external wall with window is provided

6.5.6 Distance from potential ignition sources

A safety cabinet shall be not less than 3 m from any naked flames.

6.5.7 Free escape

A safety cabinet shall be so located in relation to exits and stairways that in the event of fire, the escape of persons will not be jeopardised.

7 Storage in tanks

7.1 Application

Any storage of flammable liquid in a tank or tanks shall comply with the applicable requirements of 7.2 together with those requirements of this clause which are specifically applicable to the particular type of installation, i.e. indoors, outdoors, aboveground and underground.

NOTE – See Figures 6 and 7 for illustration of terms.

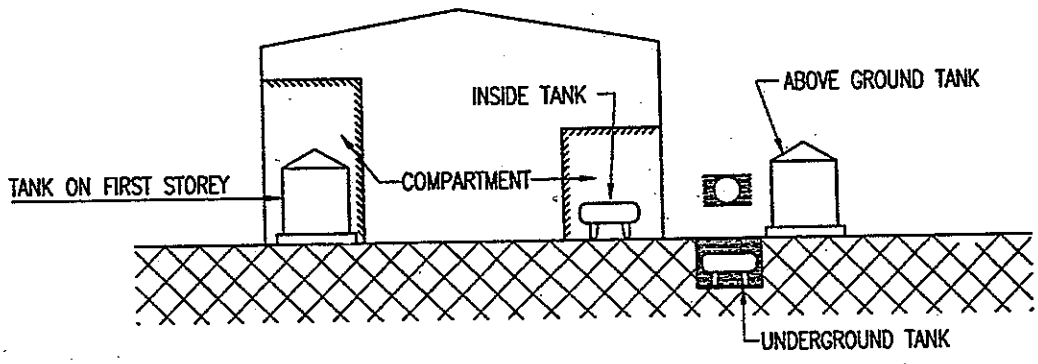

Figure 6 – Illustration of terms relating to various tank locations for all categories

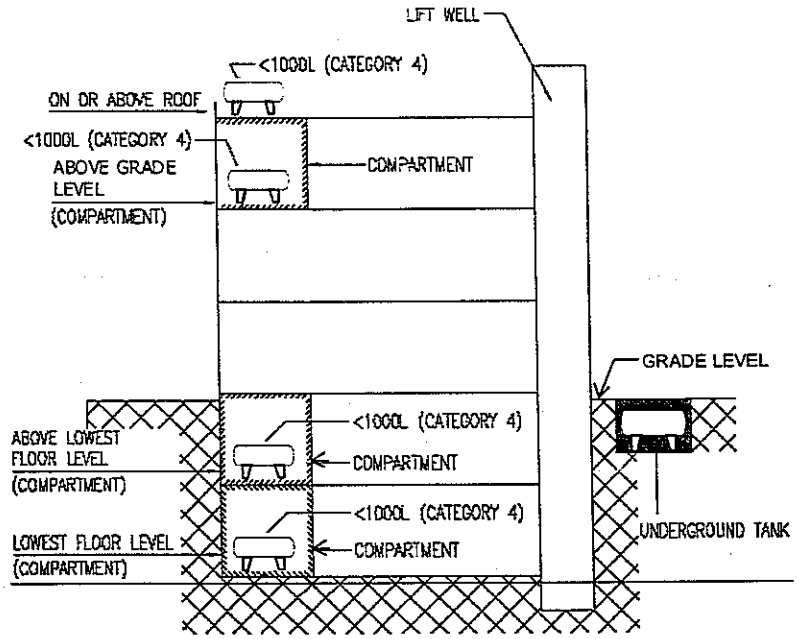

Figure 7 – Illustrations of terms relating to various tank locations for category 4 flammable liquids only

7.2 General

7.2.1 Location

A storage tank shall be so located that it is not liable to mechanical injury, interference, or exposure to excessive heat. When planning the location and layout, particular attention shall be paid to:

a) the topography of the site;

b) the nature and usage of adjoining properties;

c) any other factors which may influence proper location of tanks and bunding provisions; and

d) adequate access for operation, maintenance and fire-fighting.

7.2.2 Earthing and bonding

Each tank shall be equipped to permit compliance with Singapore Standard SS CP 33.

7.2.3 Tank construction

Tanks shall be designed to API STD 650 and API STD 2000 or other relevant standards which are deemed acceptable by the Authorities.

7.2.4 Construction of fire walls

Any fire wall shall have a 4-hour fire rating, shall be suitably stiffened so that it is self-supporting, and shall rest on adequate foundations.

NOTE – A wall constructed of brickwork, masonry or concrete, 200 mm thick, or reinforced concrete 150 mm thick, is deemed to have a 4-hour fire rating.

7.2.5 Construction of vapour barrier

Any vapour barrier shall be made of non-flammable material, and be so constructed as to be impervious to vapour over its entire area around which any separation distance is measured.

7.2.6 Control of access

A tank storage that is aboveground shall be enclosed by a wall, fence or equivalent barrier to prevent public access. The barrier may enclose either the entire site or the tank storage area.

The following installations are exempted from this requirement:

a) An installation containing not more than 5000 L of Category 4 liquids.

b) A temporary or mobile storage not exceeding 5000 L for the use of contractors on a construction site.

7.2.7 Notices

The precautionary statements in 3.18.4 shall be referred to as notices.

7.2.8 Markings

The following markings shall be provided:

a) Each tank shall be distinguished from another by an individual identifying number or cipher.

b) Markings such that it shall be possible to ascertain the contents of each tank.

c) The filling point for each tank shall be marked to identify it as such unless this is immediately obvious.

Single-tank installations and temporary storages are exempted from (a) and (c) above.

7.3 Filling tanks and tank vehicles

7.3.1 Filling connection

The filling connection to a storage tank which is filled from a tank vehicle shall incorporate a vapour-tight connection unless the filling method employs a handheld hose under constant supervision. A cap or cover with locking device shall be provided for the filling point.

The filling lines shall be empty after use unless the pipe internal diameter is less than or equal to 75 mm.

7.3.2 Location of filling point

The location of the filling point for any tank intended to be filled from a tank vehicle shall comply with the following requirements:

a) The filling point shall be readily accessible.

b) The length of any hose required to connect a tank vehicle to the filling point shall not exceed 6 m. A permanent filling line shall be installed where necessary to permit compliance with this requirement.

c) For any tank that contains a Category 1, 2 or 3 liquid and exceeds 1500 L capacity, the location shall be such that the tank vehicle can stand wholly off any public roadway.

d) The filling point shall be protected from accidental damage.

e) The filling point for any tank containing a Category 1, 2 or 3 liquid shall be in open air at least 3 m from any opening into a building.

f) Where the filling point is within a building, the building shall be opened on at least three sides for Category 1, 2 or 3 liquids, or two sides for Category 4 liquids.

g) The distance from the filling point to any on-site office, amenities workshop, source of ignition, or any boundary of the premises, except petrol station shall be:

1) 15 m or more for Category 1 and 2 liquids;

2) 6 m or more for Category 3 liquids; and

3) 3 m or more for Category 4 liquids if inside a building and shall not be in a boiler room, furnace room or the like.

h) The filling point for a tank shall be located so that a tank vehicle is not required to enter the tank compound to make a delivery.

7.3.3 Filling of elevated tanks

If the filling point is at or below the highest likely level of liquid in the tank or piping system, a stop valve and also a non-return valve shall be provided closest to the tank. Where the filling point incorporates a screw-thread type of cap, a weep hole shall be provided in the thread of the filling pipe to give an immediate warning should an attempt be made to remove the cap without the stop valve being closed.

7.3.4 Liquid level monitoring

Any tank located indoors shall be provided with a level indicator, and with a dip pipe that is sealed liquid tight when not in use. The level indicator must be easily accessible for observation so that the filling operation can be isolated immediately when necessary.

7.4 Service tanks/holding tanks

Service tanks/holding tanks, except those which are within the processing battery limit shall be considered as storage tanks in accordance with Clause 7.

7.4.1 Use of service tanks/holding tanks

A service tank/holding tank shall be interposed between a storage tank and a burner, engine, or other consuming equipment in the following circumstances:

a) When the storage tank outlet is higher than the consuming equipment inlet.

b) When the supply pressure which the consuming equipment can tolerate is limited.

c) When for any other reason it is necessary to provide a limited storage or pressure controlling facility close to the consuming equipment.

The service tank/holding tank shall be:

a) as close as practicable to the consuming device;

b) located outdoors if filled by gravity; and

c) provided with high alarms and an overfill shut-off device, together with a means of handling liquid overflow should the shut-off device fail to operate. For unmanned filling operation, the overfill shut-off device shall be automatically activated.

7.4.2 Service tank/holding tank higher than storage tank

Where liquid is pumped from a storage tank to a service tank/holding tank at a higher level, then irrespective of any level control device which may be fitted, an overflow pipe shall be provided capable of carrying the full pump capacity back to the storage tank.

7.4.3 Service tanks/holding tank indoors

Any service tank/holding tank located indoors shall be installed in accordance with 7.6 in addition to the requirements of 7.4.

7.5 Venting

7.5.1 General

Each tank shall incorporate a vent to atmosphere for the vapour space above the liquid.

NOTE 1 – These requirements deal with the design and installation of three types of vent, viz free vent, pressure-vacuum vent, and emergency vent. The free vent is the most commonly used; but it may be replaced by a pressure-vacuum vent to conserve products or reduce air pollution. Emergency vents are usually auxiliary to either a free vent or a pressure-vacuum vent, and act in the manner of excess-pressure relief valves to relieve any high vapour pressures which could be caused by overheating, fire, etc.

NOTE 2 – A tank manufacturer would not normally be able to finalise the design and size of the vent provision without consultation concerning the conditions of installation, filling and operation, and the type of products stored.

7.5.2 Vent capacity

The size of any free vent or pressure-vacuum vent shall be such that pressure or vacuum resulting from filling, emptying, or atmosphere temperature change, will not cause stress in excess of the maximum design stress for the tank.

7.5.3 Vent piping

Any vent piping between the tank vent connection and the discharge point shall comply with the following requirements:

a) The vent pipe shall fall consistently back to the tank at a slope not less than 1 in 100.

b) A vent pipe shall not pass through building foundations but may be embedded in concrete which is part of other building construction. A vent shall not be run within a cavity wall but may pass through a cavity wall or through masonry which incorporates cavities, provided that it is in a sleeve which will prevent vapour gaining access to the cavities.

c) An underground vent pipe may be either embedded in a concrete slab or laid in the earth. If the vent pipe is laid in the earth, it shall be:

   1) located not less than 300 mm below ground level;

   2) surrounded by clean washed sand, or provided with equivalent corrosion protection; and

   3) suitably protected if the area is subject to vehicular traffic.

d) The vent pipe and terminal shall be located or protected so that they are not liable to damage resulting from normal activities.

e) The vent pipe shall be vapour-tight throughout its length.

f) Vent pipes may be connected together to form a common vent line, provided that the area of any common vent line shall not be less than the sum of the cross-sectional areas required for the individual vents connected to it, and that cross-contamination will not affect adversely the use of the contents of either tank.

7.5.4 Vent outlet location

The discharge point of a vent must be outside the building into open space and shall comply with the following requirements:

a) The location, the direction of discharge and the velocity of discharge, shall be such that venting vapour will not cause danger. (See Note 1).

b) The vent discharge point shall be not less than 2 m from any opening into a building, e.g. window, door, ventilator, air conditioner or a mechanical vent intake, or 4 m from any chimney outlet or flue outlet.

c) The vent for any tank that is underground or in a tank chamber shall discharge into open air.

d) The vent for any aboveground tank may discharge at a point not less than 150 mm above the top of the tank, provided that other requirements for tank and vent locations are met.

e) A vent discharge point shall be located not less than 4 m above ground level for Category 1, 2 and 3 liquids and 3 m for Category 4.

f) Where a tank is to be filled by gravity flow from a tank vehicle, the vent discharge point for the tank shall be not less than 3 m higher than the filling connection.

g) Where a tank is to be filled by pumping from a tank vehicle, the vent pipe shall terminate in view of the filling operator.

Notwithstanding other requirements in this subclause, a vent provision may be connected to a vapour recovery or collection system.

NOTE 1 – When filling rates are high, the velocity of the discharging vapour may be high enough to carry it a considerable distance. In such cases, particular attention shall be paid to direction of discharge and to vapour diffusion, especially in the case of Category 1, 2 or 3 liquids.

NOTE 2 – Certain liquids may necessitate closed-circuit vapour return systems or vapour recovery systems, to prevent discharge of gases to atmosphere.

7.5.5 Vent terminal

The discharge end of a vent shall be protected from the ingress of foreign material by a protective cage or fitting. Where a tank contains a liquid such that the vapour space within the tank would be within explosive limits when the product temperature is between 0 °C and 40 °C, an approved flame arrestor shall be fitted to the vent terminal, except that where a pressure-vacuum valve is fitted, a flame arrestor need not be provided. Any such protective cage or flame arrestor shall not reduce the required effective vent area or create undue back-pressure.

7.5.6 Setting of pressure-vacuum vent

The settings of any pressure and vacuum valves shall be such that the pressure and vacuum limits, as given in the standard to which the tank has been designed, are not exceeded.

NOTE – Where both an emergency vent and a pressure-vacuum vent are required, there shall be sufficient difference between the pressure settings of the two vents to ensure that the emergency vent will open only under fire conditions.

7.5.7 Capacity and size of emergency vent

For storage of Category 1 and 2 flammable liquids, the capacity of any emergency vent shall be in accordance with Annex A. For a tank 4 m or less in diameter, a weak roof-to-shell joint shall not be regarded as being an acceptable alternative to an emergency vent. If the emergency vent is of a simple construction, such as a manhole cover with long bolts or equivalent, its size may be determined by reference to Annex A. For more complex emergency vents, the capacity data supplied by the manufacturer shall be used in the selection of the vent.

7.5.8 Setting of emergency vent

The pressure setting of any emergency vent shall be such that under maximum emergency venting conditions the pressure in the tank shall not exceed the limits given in the standard to which the tank has been designed.

7.6 Capacity and location of indoor tanks

7.6.1 Category 1, 2 and 3 liquids

Any storage of Category 1, 2 or 3 liquids in tanks within the confines of a building shall comply with the following requirements:

a) Storage shall only be allowed in industrial buildings.

b) The tank shall be an underground tank located below the lowest floor level installed in accordance with 7.10.

c) Above-ground tank within a single storey building shall be provided with 4-hour compartmentation and adjacent to 1 external open side of the building.

NOTE – It is recognised that because of special circumstances on a particular site, other forms of installation may provide an equal degree of safety. Specific approval shall be required for any such case.

7.6.2 Category 4 liquids

Any storage of Category 4 liquids in tanks within the confines of a building shall comply with the following requirements:

a) One or more tanks may be installed in any 2-hour fire compartment anywhere in the building provided that any such tank does not exceed 1000 L, and there are no unprotected combustible materials within 10 m of any tank, and the tanks are not interconnected.

b) Any two tanks installed under the provisions of (a) above shall be separated by either a barrier having a 2-hour fire rating or 10 m of space, except that in an engine room one service tank/holding tank may be provided for each engine, separated by not less than 3 m from any other such service tank/holding tank.

c) Any tank having in excess of 1000 L capacity shall be installed below the lowest floor level of a building, in accordance with 7.10.

7.7 Spacing of aboveground tanks

7.7.1 Application

7.7.1.1 The tank spacing requirements of this 7.7 shall apply to outdoor locations.

7.7.1.2 Where future changes of service of a storage tank are anticipated the layout and spacing shall be designed for the most stringent case.

7.7.1.3 Fixed roof tanks with internal floating covers shall be treated as fixed roof tanks unless the internal floating structure is conforming to API STD 650 or containing a metal liquid-tight metal floating device that provide sufficient buoyancy to prevent the liquid surface from being exposed when half of the flotation is lost.

7.7.1.4 Where fixed roof and floating roof tanks are adjacent, spacing shall be on the basis of the tank(s) with the most stringent conditions.

7.7.1.5 Where tanks are erected on compressible soils, the distance between adjacent tanks shall be sufficient to avoid excessive distortion. This can be caused by additional settlements of the ground where the stressed soil zone of one tank overlaps that of the adjacent tank.

7.7.2 Separation distances for tank capacity more than 3500 m^3

Table 8 gives requirements on the minimum tank spacing for Category 1, 2 and 3 liquids. Table 8 shall also apply to Category 4 liquids in small tanks.

7.7.2.1 Tanks of diameter up to 10 m are classified as small tanks.

7.7.2.2 Small tanks may be sited together in groups with no group having an aggregate capacity of more than 10 000 m^3. Such a group may be regarded as one tank.

7.7.2.3 For reasons of fire-fighting access there shall be no more than two rows of tanks between adjacent fire engine access roads.

Three rows of only Category 4 tanks are allowed within the same bunded compound unless:

a) Fixed or semi-fixed foam fire protective system shall be provided for all tanks and the intended tanks shall also be provided with fixed water spray system.

b) Fire engine access road shall be provided from all sides of the bunded compound.

7.7.2.4 For Category 4 liquids other than for storage in small tanks, the following requirements shall apply:

a) Distance to boundary, battery limit and source of ignition shall be greater than 15 m but not less than ½ diameter.

b) Distance between tanks shall be at least 1/6 sum of adjacent tank diameters.

c) Distance to bund wall shall be not less than half the height of the tank.

7.7.3 Separation distances for storage tank capacity less than 3500 m^3

Table 9 gives requirements on the minimum tank spacing for all categories of liquids for tank capacity up to 3500 m^3.

7.7.4 Mixed categories of liquid

Where differing categories of liquid are stored, the following requirements shall apply:

a) When stored within the same compound, the separation distance applicable to liquid of the lowest flash point category present shall apply to all adjacent tanks within that compound.

b) For tanks in separate adjacent compounds, each tank shall be considered separately in its relationship to tanks in the adjacent compound, and the separation distance in each case shall be that applicable to the liquid of the lower flash point actually present in either of the tanks under consideration.

Table 8 – Separation distances for Category 1, 2, 3 and 4 storage tank capacity more than 3500 m^3

Factor	Type of tank roof	Minimum distance for Category 1, 2 and 3 flammable liquids	Minimum distance for Category 4 flammable liquids
Within a group of small tanks (a diameter less than 10 m)	Fixed or floating	Determined solely by construction/maintenance/operational convenience.	Determined solely by construction/maintenance/operational convenience
Between a group of small tanks and another group of small tanks	Fixed or floating	10 m minimum, otherwise determined by the size of the largest tanks in the group, i.e. half the diameter of the largest tank, and not more than 15 m	10 m minimum, otherwise determined by the size of the largest tanks in the group, i.e. half the diameter of the largest tank, and not more than 15 m
Between a group of small tanks and another larger tank	Fixed or floating	10 m minimum, otherwise determined by the size of the larger tank, i.e. half the diameter of the larger tank, and not more than 15 m	0.3 times the diameter of the larger tank, but not less than 10 m and need not be more than 15 m (see Note 1)
Between adjacent individual tanks (other than small tanks)	(a) Fixed	Half the diameter of the larger tank, but not less than 10 m and need not be more than 15 m	0.3 times the diameter of the larger tank, but not less than 10 m and need not be more than 15 m (see Note 1)
	(b) Floating	0.3 times the diameter of the larger tank, but not less than 10 m and need not be more than 15 m (see Note 1)	
Between a tank shell and the top of the inside of the bund wall of its compound	Fixed or floating	Distance equal to not less than half the net height of the tank or 7 m whichever is lesser. (refer to Figure 8) (Access around the tank at compound grade level must be maintained.) In addition, the tank shall be sited within reach of mobile fire fighting equipment.	Distance equal to not less than half the net height of the tank or 7 m whichever is lesser. (refer to Figure 8 – bund wall location) (Access around the tank at compound grade level must be maintained.) In addition, the tank shall be sited within reach of mobile fire fighting equipment
Between any tank in a group of tanks and the inside top of another adjacent compound bund wall	Fixed or floating	Not less than 15 m	Not less than 15 m
Between a tank shell and a public boundary fence	Fixed or floating	Greater than 15 m but not less than ½ diameter	Greater than 15 m but not less than ½ diameter

Factor	Type of tank roof	Minimum distance for Category 1, 2 and 3 flammable liquids	Minimum distance for Category 4 flammable liquids
Between the top of the inside of the bund wall of a tank compound and a public boundary fence or to any fixed ignition source	-	Not less than 15 m	Not less than 15 m
Between a tank shell and the battery limit of a process plant	Fixed or floating	Greater than 15 m but not less than ½ diameter	Greater than 15 m but not less than ½ diameter
Between the top of the inside of the bund wall of a tank compound and the battery limit of a process plant	-	Not less than 15 m	Not less than 15 m
For large diameter tank of 60 m or more	Floating	One tank in a single bund	One tank in a single bund

NOTE 1 – In the case of crude oil storage tank this 15 m option does not apply.

NOTE 2 – Unstable liquid is outside the scope of this Singapore Standard and should be referred to the relevant local authority.

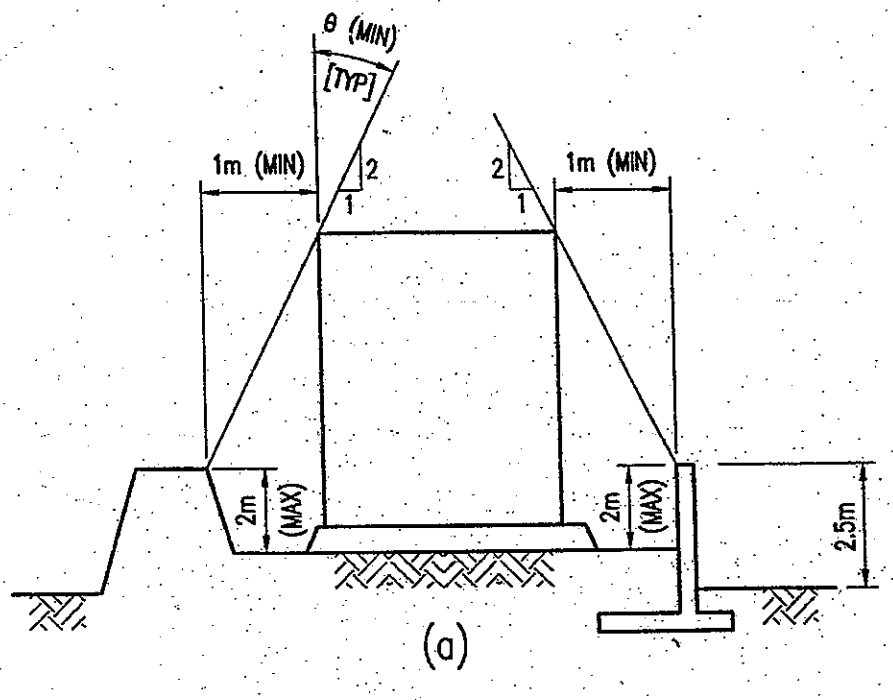

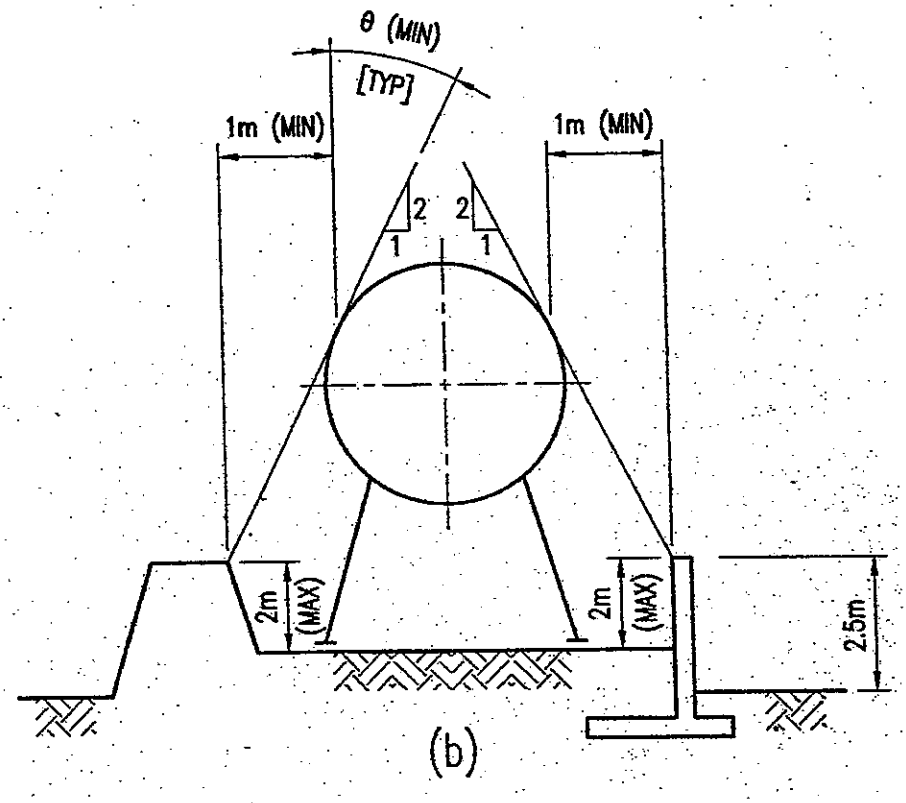

Figure 8 – Bund location limits

Table 9 – Separation distances for storage tank capacity less than 3500 m^3

Factor	Capacity (m^3)	Minimum distance	
		For vertical tank with weak roof-to-shell seam (m)	Horizontal and vertical with emergency relief venting to limit pressures to 17 kN/m^2 gauge (m)
Between a tank and a public boundary fence or to any fixed ignition source	Up to 1	Diameter of tank	1.5
	Above 1 to 3		3
	Above 3 to 50		4.5
	Above 50 to 100		6
	Above 100 to 200		9
	Above 200 to 350		15
	Above 350 to 2000		24
	Above 2000 to 3500		30
Between a tank and on site buildings[1] and internal roads	Up to 1	1/3 diameter of tank	1.5
	Above 1 to 3		1.5
	Above 3 to 50		1.5
	Above 50 to 100		1.5
	Above 100 to 200		3
	Above 200 to 350		4.5
	Above 350 to 2000		7.5
	Above 2000 to 3500		10.5
Between adjacent individual tanks	Up to 3500	1/6 sum of diameters of adjacent tanks (concept of small tank is also applicable)	
Between a tank and the top of the inside of the bund wall of its compound	Up to 3500	Distance equal to not less than half the net height of the tank or 7 m whichever is lesser. (refer to Figure 8 – bund wall location) (Access around the tank at compound grade level must be maintained.) In addition, the tank shall be sited within reach of mobile fire fighting equipment.	
Between a tank and filling points[2], loading platforms or package storage	Up to 3500	Category 1, 2 and 3 liquids - Diameter of the tank, but not less than 6 m and not more than 15 m Category 4 liquids - Diameter of the tank, but not less than 3 m and not more than 7.5 m	
Between a tank and the battery limit of a process plant	Up to 3500	Not less than 15 m	

NOTE 1 – This separation distance has to be based on the unprotected opening requirements as per the Fire Code.

NOTE 2 – Points for filling packages, drums or tank vehicles and not the filling point into the storage.

7.7.5 Use of fire walls for horizontal tank

Separation distances may be measured in a horizontal and vertical plane around the end of any 2-hour fire rated wall which intervenes, provided that:

a) the tank from any on-site facilities/boundary line shall be at least 2/3 of the separation distance requirement or 2 m whichever is greater (see Figure 9);

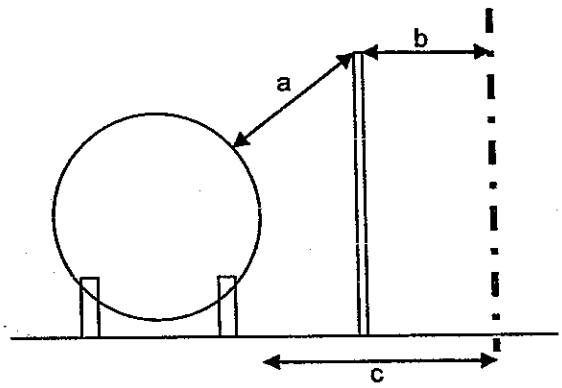

(a + b) refers to minimum distances in Table 9

$c = 2\text{ m or } \frac{2(a+b)}{3}$, whichever is greater

Figure 9 – Use of fire wall for reduction of separation distances

b) the top of the fire wall shall not be lower than the level of the top of the tank and limited to a maximum of 1 long side and 2 short sides with respect to the horizontal tank plan dimensions (see Figures 10 (a) and (b)).

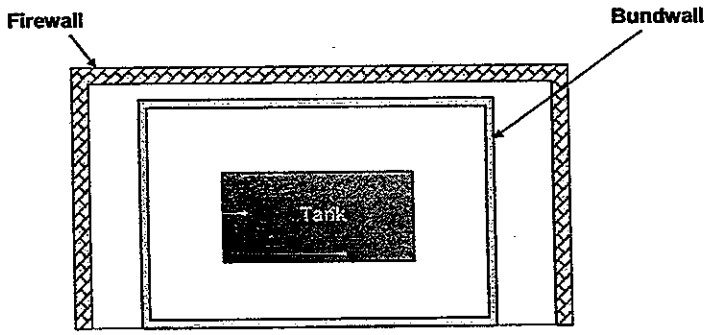

Figure 10 (a) – Acceptable layout

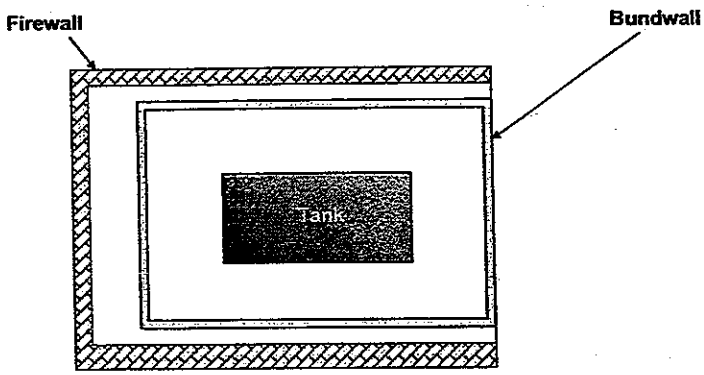

Figure 10 (b) – Unacceptable layout

7.8 Bunds, compounds and impounding basins

7.8.1 Requirement

A compound shall be provided for any aboveground tank(s). Alternatively, it is acceptable to arrange that spillages or a major leak from any tank are directed quickly and safely by gravity to a depression or impounding basin at a convenient location (see 7.8.3). Splash screen/barrier shall be used when setback distance of horizontal tank to bund wall cannot be complied with, provided all other setback distances are complied with.

7.8.2 Bunds and compounds

7.8.2.1 Capacity

The net capacity of a compound, i.e. less the volume of the displacement effect of any tank and its foundations, other foundations and its structures, equipment, etc, all below the level of the bund crest, shall be not less than 100 % the volume of the largest tank in the tank compound.

7.8.2.2 Design and construction

A compound shall comply with the following requirements:

a) It shall be sufficiently impervious to retain the liquid being stored.

b) Any bund shall be designed to withstand the hydrostatic head when full.

c) Any earthen wall 1 m or more in height shall have a flat section at the top not less than 600 mm wide.

d) The slope of any earthen wall shall be consistent with the angle of repose of the material of which the wall is constructed.

e) A bund shall not be higher than 2 m above interior grade unless means for safe and rapid entry and exit are provided, subject to the approval of the relevant local authority. Bund wall height above the exterior road level shall be not higher than 2.5 m.

f) Any pipe that passes through a bund shall be designed to prevent excessive stresses as a result of settlement or expansion resulting from fire exposure.

g) The initial height at the crest of any bund shall provide adequate allowance for subsequent settling, erosion, etc.

h) The compound for the aboveground tank shall comply with the relevant clauses of the Code of practice on pollution control.

i) There shall be no connections to the public sewer system within the spill containment compound.

7.8.2.3 Compound subdivision

Where the aggregate capacity of the tanks in any compound exceeds 10 000 m^3, intermediate bunds of at least half of the average height of the main bunds or 600 mm, whichever is the lesser, shall be provided so that any subdivision so created contains tanks having an aggregate capacity not exceeding 10 000 m^3 or a single tank if such tank exceeds that capacity.

7.8.2.4 Total storage per compound

Except for a single tank in a compound, the total aggregate volume of Category 1, 2 or 3 liquids that may be stored within any one compound shall be 60 000 m^3 where any tank has a fixed roof or 120 000 m^3 where only floating-roof tanks are used.

Except for a single tank in a compound, the total aggregate volume of Category 4 liquids that may be stored within one compound shall not exceed 180 000 m^3.

7.8.2.5 Compound drainage

A compound shall be drained in accordance with the following requirements:

a) Each compound or any subdivided compound shall have its own drainage system.

b) The drainage provision shall slope away from any tank to a sump by gravity. The sump is in turn drained by means of gravity or by pumping. In the former case, a manually controlled normally-closed valve shall be provided; in the latter case, the pump shall be manually controlled from outside the compound.

c) The drain from one compound discharge shall not drain into another compound except that sub-divided compounds may be interconnected with individual isolating valves accessible from both sides.

d) Any valve controlling the drainage from a compound shall be located outside the bund. The valve shall be of a type in which the distinction between the open and shut positions is obvious.

e) The discharge from any sump shall be, readily accessible for inspection, located outside the compound, and designed to prevent the discharge of flammable liquids to any natural watercourse, public sewer, or drain.

f) The discharge capacity of any drainage system shall be sufficient to accommodate for water flow which might occur in an emergency.

7.8.3 Impounding basins

7.8.3.1 Capacity

When an impounding basin is used for the retention of spillage from a compound, it shall be constructed and located in a similar manner to the tanks and compounds used for storage. The walls of the compound shall therefore be of sufficient height to provide adequate head to allow the designed flow rate to the impounding basin.

One impounding basin can serve up to 10 tanks or a total capacity of 1 million m^3 of storage, whichever is the lesser. The capacity of the impounding basin together with that of the compound around the tank shall be not less than the capacity of the largest tank served in that compound.

7.8.3.2 Interconnection between tank compound and impounding basin

The connection(s) from a tank compound to an impounding basin shall be adequately sized to handle spillage due to tank leakage. The connection(s) shall be provided with a fire seal to prevent fire spreading between the compound and the impounding basin.

7.8.3.3 Spacing

The distance between the inside edge of the impounding basin and the inside top bund wall of the nearest tank, tank compound, public boundary lines, fixed ignition source and battery limit shall be a minimum of 15 m.

7.8.3.4 Surface area of impounding basin

The surface area of an impounding basin when full shall preferably be limited to a maximum of 10 000 m^2 to facilitate fighting a fire. The required impounding capacity may be provided by more than one impounding basin. Where this is the case the layout of the impounding basin shall be considered from the viewpoints of fire-fighting and preventing the spread of fire.

7.8.3.5 Drainage and pumpout

Facilities shall be provided to empty an impounding basin of any liquid collected.

7.9 Installation methods for aboveground tanks

7.9.1 Foundations

An aboveground storage tank shall rest on a foundation which is adequate to support, without unacceptable or uneven settling, the following loads and forces:

a) The direct load imposed by the tank when full of either water or product, whichever is the heavier.

b) Any possible overturning forces, and in particular those due to wind when the tank is empty.

c) Any uplift or other distorting forces such as may occur in a light tank under pressure.

Particular attention shall be paid to the adequacy of any attachment between the tank and its supporting structure or foundation which may be required to withstand any such forces.

NOTE – Because of the wide variety of surface, subsurface, and climatic conditions, it is obviously not practicable to establish design data to cover all such situations. The allowable soil loading requires to be decided for each individual case, having regard to the permissible settlement.

7.9.2 Supporting structures

Any supporting structure between the foundation and the tank shall comply with the following requirements:

a) Any supporting structure, or ancillary structure used to provide rigidity, shall be made wholly of non-combustible material.

b) The structure shall be designed according to the requirements of the appropriate standard applicable to the particular construction.

c) The design shall take account of the total mass of the tank when full of either water or product, any wind loading, any possible uplift loading on restraining connections, and any likely seismic loading.

d) Any metallic support that is more than 600 mm high and supports a tank whose capacity exceeds 2500 L of Category 1 and 2 liquids, or 5000 L of Category 3 liquids, or 10 000 L of Category 4 liquids, shall be protected by material having at least a 2-hour fire rating.

7.9.3 Tank bearing area

The method of support of a tank shall be such as to prevent excessive concentration of loads on the supporting portion of the tank shell. Legs, cradles or similar methods of support shall be so attached that possible trapping of moisture cannot cause corrosion of the tank shell.

7.9.4 Tanks subject to flood

A tank located in a flood-prone area shall be anchored to prevent floating.

7.10 Installation methods for underground tank

Any buried tank shall have a 2-hour fire rated concrete top protection covering.

7.10.1 Secondary containment

The compound for the underground tank shall comply with the relevant clauses of the Code of practice on pollution control.

Secondary containment shall be constructed using appropriate materials. Underground reinforced concrete tank chamber or an outer tank shall be deemed acceptable.

7.10.2 Underground tank chambers

Any tank chamber used as a secondary containment shall be constructed in accordance with the following requirements:

a) The walls and floor of the chamber shall be of reinforced concrete not less than 150 mm thick and of such quality as to prevent any leakage out off or into the chamber.

b) The roof or lid shall be of reinforced concrete of the thickness necessary to support itself and any superimposed loads, but not less than 150 mm thick.

c) Means of access may be provided in the form of a removable roof or lid, hatch, or access pit. Any cover shall have a 2-hour fire rating.

d) There shall be a clear space of not less than 450 mm between any tank and roof of the chamber.

e) The distance from any tank to a side or wall of the chamber shall be not less than 150 mm.

f) The tank shall be set on a bed of sand not less than 150 mm thick, and, subject to 7.10.3, all other spaces shall be filled with sand well compacted in place.

g) Filling sand shall be water-washed and free from soil, rocks, gravel or ashes and other deleterious matter, and shall have a minimum resistivity of 100 Ωm for corrosion minimisation.

h) Any access pit shall comply with 7.10.3.

7.10.3 Underground tank access pits

Where it is necessary to obtain access to fittings or to a manhole of a buried tank, one or more access pits may be provided in accordance with the following requirements:

a) Not more than one of the access pits may be left without sand on earth filling.

b) Any unfilled access pit shall have a horizontal cross-sectional area of not more than 1 m^2 with a maximum dimension of 1.4 m.

c) Pit walls shall be of low carbon steel plate not less than 6 mm thick; reinforced concrete not less than 75 mm thick; or masonry not less than 100 mm thick.

d) The pit walls shall extend from the top of the tank to the ground surface above.

e) Each access pit shall be fitted with a cover that is watertight and of strength sufficient to withstand the normal traffic load. The fire resistance of such a cover shall be not less than 2 hours

7.10.4 Separation from boundary

The distance between an underground tank and any boundary shall be not less than 2 m.

7.10.5 Proximity to foundations

An underground tank shall be so located with respect to existing building foundations and supports so that these loads cannot be transmitted to the tank.

7.10.6 Corrosion protection

Any buried tank and its associated piping shall be protected from corrosion by one or more of the following methods:

a) Protective coatings or wrappings;

b) Cathodic protection; or

c) Corrosion-resistant materials.

Consideration shall be given to the corrosion history of that area in the selection of the type of corrosion protection system.

8 Piping and tank auxiliaries

8.1 General design and construction

8.1.1 Design suitability

The design, fabrication, assembly, testing and inspection of piping containing flammable liquids shall be suitable for the expected working pressures, temperatures and structural stresses, and shall comply with a standard appropriate to the particular class of installation.

8.1.2 Material suitability

Any material used in the construction or installation of piping shall be suitable for the conditions of use, and in particular:

a) it shall be compatible with the particular liquid or any other component with which it may be in contact;

b) it shall be resistant to any heat to which it may be exposed. The material used shall be non-combustible; and

c) where subject to corrosion, it shall be sufficiently resistant to ensure an acceptable life.

8.1.3 Design and construction

The following general design consideration shall be taken into account when designing or installing any piping:

a) The layout shall take account of the needs for operating access, maintenance, replacement, drainage, etc. and shall ensure that any accessways are not impeded.

b) Supports and fixtures shall be secured and the piping shall not be unduly exposed to mechanical damage.

c) Protection against corrosion shall be provided wherever necessary. Particular attention shall be given to outside and underground locations or to any piping which passes through or is embedded in any material likely to induce corrosion.

d) Provision shall be made, wherever necessary, for the expansion or contraction of the piping and its contents.

e) Any trench in which pipes are laid shall be drained, and shall be of adequate dimensions to permit access to valves and fittings.

f) Any buried piping shall be protected from superimposed loads, ground settlement, etc.

g) Any necessary electrical bonding and earthing shall be provided.

h) Piping shall be painted and/or marked in a manner sufficient to permit ready identification of its contents.

i) Where piping is encased in concrete, means shall be taken to guard against corrosion and to provide for expansion.

8.2 Piping

8.2.1 Flexible tube

Flexible tubing, piping or hose may be used only on condition that:

a) the use of such tubing is unavoidable because of the need to provide for movement or to reduce the effect of vibration, tank settlement; and

b) the tubing is of flexible metallic, metal-reinforced, armoured or other construction suitable for the working pressure, temperature, and the liquid being handled.

8.2.2 Pipe expansion-pressure relief

Any section of pipe so arranged that liquid can be locked in, such as between two shut-off valves, and then subjected either to artificial heating (e.g. line heating) or exposure to direct sunlight, shall be provided with an automatic means of relieving excess liquid pressure and returning discharged liquid to a safe place unless it can be shown that design stresses will not be exceeded.

8.2.3 Fuel transfer pipe from outside storage tank to a service tank inside building

The fuel transfer pipe from a storage tank in open-area to a service tank which is housed inside a building shall have the following consideration:

a) The fuel transfer pipe shall not be over-designed to allow the chances to fill this pipe with fuel to make up additional capacity;

b) The fuel transfer pipe shall be designed specifically to the primary or required use and not to be used as part of the storage purpose;

c) In general, the maximum size of 50 mm shall be considered adequate unless it is reviewed by the appropriate competent person; and

d) The fuel transfer pipe shall always remain empty when it is not in the process of transferring.

8.2.4 Fuel transfer pipe from outside storage tank to a fuel burning equipment inside building

Where piping is utilised for means of distributing fuel oil to equipment, without the use of a holding tank the following requirements shall apply:

a) All piping shall be suitably supported so as to not allow overstressing of piping and shall be suitably isolated from rotating equipment; and

b) All piping shall be adequately designed to acceptable standard.

8.3 Valves

8.3.1 Provision of valves

Sufficient valves shall be provided to permit proper operation of the system and to protect the installation, and in particular:

a) where a connection to a tank is such that a fault downstream could cause substantial loss of liquid from the tank, a valve shall be located as close as practicable to the shell of the tank;

b) a non-return valve shall be located in each tank dispensing pipe close to the filler connection unless the levels of the dispensing connection, the downstream filler piping, and the tank are such that backflow cannot occur when the dispensing hose has been disconnected;

c) provision shall be made to shut off quickly the flow of liquid from the storage tank to a consuming device in an emergency;

d) provision shall be made to shut off quickly the flow of any liquid to a tank vehicle loading point;

e) any shut-off device required under (b), (c) and (d) above, shall be manually operable, either directly or by remote control, from a convenient and safe location and shall be legibly and indelibly marked with the words 'EMERGENCY FUEL (or liquid) SHUT-OFF'.

8.3.2 Valve construction

Any valve used for a flammable liquid shall comply with the following requirements:

a) For any valve that can be operated or closed by manual action, the distinction between the open and shut positions shall be obvious.

b) The direction of closing for any hand-operated valve shall be clearly marked.

c) Any valve whose failure in the event of fire could create a hazard, the valve handle shall be of metal not inferior to the valve body in fire resistance.

d) The use of detachable handles for valves shall be avoided unless essential for security, procedures, or sequences. Any such handle shall not be removable unless the valve is at a safe setting.

e) A valve that is required to be a fire-safe type shall comply with BS EN 12266-1, BS EN 12266-2, API SPEC 6FA, or other equivalent standards.

8.4 Pumps

8.4.1 Pressure relief

Where the discharge pipe of a power-operated pump, except a centrifugal pump, can be shut off, a pressure-relief valve shall be provided in accordance with the following requirements:

a) A valve arranged to isolate a pressure-relief valve shall not be installed unless unavoidable. Any such isolating valve shall be so arranged that it can be locked in the open position.

b) The discharge from the relief valve shall preferably be returned to the storage tank supplying the pump, but may be led back to the suction side of the pump.

8.4.2 Heat dissipation

A pumping system shall incorporate sufficient provision for heat dissipation to prevent unacceptable temperature rise.

8.4.3 Emergency shut-off

A means shall be provided for shutting off in an emergency the power to any pump supplying a flammable liquid to a storage tank or consuming device. The shut-off device shall be readily accessible and prominently identified.

8.4.4 Pump drive

Any motor or engine that drives a pump for use with Category 1, 2 or 3 liquids shall be of the type specifically approved for use with such liquids.

9 Operations

9.1 Application

This clause prescribes procedures for the safe operation of an installation, as distinct from requirements for its construction. Its main emphasis is on fire and explosion risks, but other safety matters are mentioned.

9.2 General precautions

9.2.1 Ignition sources

No ignition sources, matches or lighters shall be introduced into a restricted area.

9.2.2 Smoking

Smoking shall be prohibited within any restricted area except within any place specifically approved for such purposes. 'No Smoking' or 'Smoking Permitted' notices shall be displayed, as appropriate.

9.2.3 Control of entry

Procedures shall be established for the control of entry to a restricted area and the prevention of unauthorised access to facilities and equipment.

9.2.4 Road vehicles

Vehicle access to and movement within a restricted area shall be controlled, and in particular:

a) Each vehicle shall be confined to a designated safe area unless it has been approved by the authorised personnel for use in hazardous locations;

b) Only roadworthy vehicles shall be allowed to move within the restricted area. In addition, drivers shall be competent to operate the vehicle;

c) Appropriate speed limits shall be determined, indicated by signs where necessary, and strictly enforced; and

d) Vehicles shall be parked only in designated parking places and with due regard to normal operating and emergency conditions.

9.2.5 Illumination

No work shall be carried out without adequate illumination. Electrical hand lamps shall not be taken into a restricted area unless of a type approved for the purpose.

9.2.6 Contract work

Adherence to applicable safety regulations shall form part of any contract, and any contractor engaged to carry out work within any restricted area shall be instructed that:

a) Work shall be carried out only within the area designated;

b) Methods actually used and procedures, in so far as safety considerations are concerned, shall be those agreed between the contractor and the occupier; and

c) The contractor shall ensure that all work is planned and supervised by responsible staff.

9.2.7 Leakage and spillage

Care shall be taken to prevent or control leakage or spillage of flammable liquids. Action to clean up spillage or leakage shall be initiated accordingly to an established contingency plan immediately. All leakages and spillages shall be collected for proper disposal.

9.2.8 Manual transfer of liquids

Where a Category 1 and 2 liquids are to be transferred manually from storage to a point of use, a self-closing safety faucet shall be used for dispensing, and a safety container shall be used for the transport. A proper safety precaution against static charge build up shall be in place, including the control of product flow velocities (refer to API 2003 or equivalent for details).

9.2.9 Stacked packages

Where an outdoor storage has no wall (other than a bund) on one or more sides, the packages shall be so arranged or stacked that they are unlikely to fall outside the compound if the stack should collapse.

9.2.10 Site upkeep

The area within any compound or in or around storage and handling facilities shall be maintained in a safe condition. In particular:

a) The area shall be kept clear of all extraneous material;

b) Specified clearance distances shall be maintained at all times;

c) Packages shall not be placed so as to jeopardise entry or exit;

d) Vegetation which may become a fire hazard shall be kept short; and

e) Any weed killer that is known to be a potential source of fire or land contamination shall not be used.

9.2.11 Earthing and bonding

Appropriate earthing and bonding procedures shall be employed when flammable liquids are transferred through pipelines or filled into tanks or packages. The recommendations contained in Singapore Standard SS CP 33 shall be followed.

9.2.12 Heated storage

Operating procedures for installations in which liquids are heated shall give due recognition to the following:

a) Where the temperature of any portion of the heated liquid is 6 °C below its flash point or reach 93 °C, the vapour space in any tank may be within the flammable range.

b) Any water present in the tank may flash to steam and cause a boil-over as the boiling point is approached. Any water removal procedures need to be followed closely.

9.2.13 Doors and doorways

Any door to a storage compartment or safety cabinet shall be kept closed except when entry is required.

9.2.14 Tank openings

Any opening into a tank such as the filler, dipstick opening and the like, shall be kept closed when not in use by means of the closure provided.

9.2.15 Mechanical ventilation systems

Operating procedures shall be such as to ensure that any mechanical ventilation system is operating whenever work is being done within the ventilated area.

9.2.16 Commissioning

No installation or part thereof shall be put into service until all precautionary measures, including fire and safety protection systems/equipment, are operational.

9.3 Training and supervision

9.3.1 Personnel training

All personnel including contractors shall be made fully conversant with in-house safety rules and regulations applicable to their duty.

They shall attend and pass the relevant safety orientation courses conducted by approved training centre.

Personnel, including contractors shall be so trained as to be fully conversant and competent with the operation to which they are assigned.

9.3.2 Fire fighting and emergency response

Personnel assigned to fire fighting and emergency response shall be so trained as to be fully conversant with their duties.

9.3.3 Personnel protection

Personnel shall not be exposed to harmful concentrations of vapours, oxygen-deficient atmospheres, or other environmental hazards, unless suitable protective clothing, breathing apparatus, or other protection appropriate to the circumstances is used.

9.3.4 Responsibilities of personnel

Any person working in any restricted area shall comply with the relevant requirements of this and other relevant standards. Any protective safeguards, safety devices, and appliances shall be properly used.

9.3.5 Supervision

All operational and maintenance work shall be planned and supervised by responsible staff who shall ensure that all necessary precautions are observed.

9.4 Construction and maintenance work

9.4.1 Authorisation of work

No work shall be carried out within any restricted area without proper authorisation.

9.4.2 Permit-to-work

Any work within a restricted area shall be authorised by means of a Permit-to-work, which shall be issued only by designated person from the installation.

9.4.3 Entry into a confined space

A Permit-to-Work shall be obtained before any person enters a confined space. The requirements shall be in accordance with Singapore Standard SS CP 84.

9.4.4 Preparation of work site

Any person who issues a Permit-to-Work shall be responsible for ensuring that the site area and plant subject to the Permit-to-Work are properly prepared to prevent the danger of fire, explosion or exposure to hazardous materials. Precautionary measures shall include the following, as appropriate:

a) Identification of both the equipment to be worked on and all other equipment affected.

b) Depressurisation and disconnection.

c) Isolation from other equipment.

d) Purging of the equipment.

e) Provision of adequate ventilation throughout the working period.

f) Removal of flammable materials.

g) Sealing off of sewers, drains and gutters.

h) Provision of additional protection and fireguards.

i) Testing for hazardous vapours and oxygen content shall be carried out at regular intervals as stipulated by Singapore Standard SS CP 84. Similar test shall also be carried out prior to each re-entry.

9.4.5 Completion of work

When work covered by a Permit-to-Work has been completed, the person who issued the Permit-to-Work shall, before allowing the plant to be returned to the service, ensure that:

a) The work has in fact been completed;

b) Any temporary arrangements, e.g. bypass lines, blank flanges, have been removed;

c) All personnel and equipment are accounted for; and

d) The Permit-to-Work is properly signed off and cancelled by the issuing authority.

9.4.6 Hot work

Any work within a restricted area, involving cutting or welding by gas or electric arc or any non-welding work of equivalent risk, e.g. grinding, drilling, or the use of percussion tools, shall not be undertaken unless a Permit-to-Work has first been obtained.

9.4.7 Hot tapping

No attempt shall be made to weld a connection to a tank or pipe containing flammable liquid unless a Permit-to-Work has first been obtained. Where it is impracticable to isolate, and for empty and gas-free tank or pipe, hot-tapping techniques may be used. In such cases, the equipment and technique shall be approved and the operator shall be trained specifically in their use.

9.4.8 Routine work

Any work for which a Permit-to-Work is not required shall be sufficiently supervised to ensure the safe conduct of the work.

9.4.9 Open areas

A Permit-to-Work may define an area as being an open area within any restricted area in which major maintenance or construction work may be performed without further permission. The physical limits of such an open area shall be clearly defined on the ground and shall have been determined in relation to the plant so that the unrestricted use of ignition sources does not create a hazard.

NOTE – Considerable care is still necessary in an open area, as certain articles may of themselves be hazardous, irrespective of location. Used tanks, pipes and containers are examples.

9.5 Piping

9.5.1 General

Procedures for safety in the operation, repair and maintenance of any piping shall be established. Such procedures shall take into account the nature of the liquids being handled.

9.5.2 Protection from excess pressure

Any operation that could cause excess pressure due to thermal expansion of liquid in a locked-off section of piping not provided with pressure relief shall be avoided.

NOTE – Non-return valves and positive displacement pumps can have the effect of closed valves.

9.5.3 Regular inspection

Piping shall be regularly inspected to ensure that it remains adequately supported, is not subject to undue movement or vibration, and is free from corrosion and leakage.

9.5.4 Identification

Any marking used to indicate the liquid being handled shall be maintained in a clear and legible condition.

9.5.5 Preparation for modification or repair

A Permit-to-Work shall be obtained before any modification or repair is commenced. The section of the piping involved shall be isolated and gas-freed where necessary. Precautions shall be taken when opening piping to protect personnel against exposure to any contents that might be hazardous.

9.6 Storage tanks

9.6.1 Filling and emptying

Safe filling and emptying procedures shall be established on the basis of the following requirements:

a) A safe filling level that allows for the needs of thermal expansion shall be established, and shall not be exceeded.

b) Filling and emptying flow rates for which the tank vents were designed shall not be exceeded.

c) The monitoring and control of filling procedures shall be such as to prevent the occurrence of overflow, spillage, or excessive pressure in the tank.

9.6.2 Tank vents and fittings

All vents shall be inspected regularly to ensure that passages are clear and any relief valve is in an operable condition. Dip hatches, manholes and similar tank openings shall be kept closed when not in use.

9.6.3 Bund walls and compounds

Any bund wall shall be maintained at its designated height and in a condition that will prevent the escape of liquid from the compound. Any compound drain valve shall be kept closed except during the supervised drainage of water.

9.6.4 Emptying tanks for cleaning or repair

Any tank shall, as far as possible, be emptied of its contents by means of the normal connection or drain line. A temporary pump and hose arrangement shall be used only for removing residues, and only under the conditions and in the locations specified in the Permit-to-Work. Any portable pump that is being used in a hazardous area, or is pumping flammable liquid, shall be driven by one of the following:

a) Air or steam power;

b) An electric motor of a type approved for use in a hazardous area; or

c) A compression-ignition (diesel) engine specifically approved for use in a hazardous area.

9.6.5 Pyrophoric materials

The danger of ignition of any pyrophoric material shall be taken into account when air is admitted to the tank.

9.6.6 Isolation of a tank

Any tank being prepared for cleaning or repair shall be isolated physically from any other tank or pipeline by insertion of a blank flange, as close as practicable to the tank. The closing of a valve is not in itself an acceptable means of isolation. The isolation of a tank for cleaning or repairing shall be covered by a Permit-to-Work.

9.6.7 Repairs

Tank repair work shall not commence until a Permit-to-Work has been issued.

9.6.8 Abandoned underground storage tanks

When an underground storage tank is to be taken out of service permanently, the Authority shall be notified of abandonment, the required administrative procedure shall be followed, and one of the following procedures, which shall be specifically approved for the particular case, shall be applied:

a) Removal of the tank to an approved place, the tank shall be cleaned and gas free.

b) Whole filling of the tank with an inert solid material such as sand, concrete, or other approved material, and the disconnection of all pipes from the tank.

c) Gas-freeing the tank, filling with water containing a suitable corrosion inhibitor, and sealing any filling, suction dip or vent pipe with a steel cap or other effective permanent seal.

10 Fire fighting facilities

10.1 Application

Any storage of flammable liquids shall be provided with fire fighting facilities as specified in this clause. Installations identified as having a higher fire potential by the relevant local authority are to have a higher degree of fire fighting facilities.

Fire fighting facilities shall consist of fire extinguishing, fire exposure protection systems and fire fighting appliances.

This clause applies to the following:

a) Aboveground tanks;

b) Package storage; and

c) Underground tanks.

10.2 General requirements

10.2.1 In general, all mode of activation for the fire fighting facilities shall be triggered manually and/or automatically and in turn automatically activate the fire alarm system.

10.2.2 All fire fighting extinguishing system shall be in a form of fixed, semi-fixed or portable system.

10.2.3 All fire exposure protection system shall be in a form of fixed or portable system.

10.2.4 All fixed and semi-fixed fire extinguishing and exposure protection systems shall be provided with inlet connections just beside the manifold system to enable Company Emergency Response Team (CERT) and relevant local authority to charge the water or foam solution into the system. The number of inlets shall be adequately designed, supported and located outside the bund within 10 m from the fire-fighting appliances' access road.

10.2.5 Any material used in any fire extinguishing and exposure protection systems shall be compatible with the flammable liquid being stored.

10.2.6 Any fire-fighting appliances, equipment, components, hoses, connectors, booster connections, foam concentrate and the like shall be compatible with that of the relevant local authority.

10.2.7 Any fire-fighting equipment shall be so located as to be reasonably adjacent to the risk being protected and accessible in any emergency.

10.2.8 Any fire-fighting equipment that is susceptible to corrosion or degradation by weather, the environment, ultraviolet light, fumes and the like, shall be protected by a sheltered location or a protective enclosure, with the contents suitably labelled.

10.2.9 All fire-fighting equipment are to be painted distinctively, using red as the basic colour.

10.2.10 All tanks shall have their numbers painted with numerals of contrasting colours to that of the tank shell. The size of these numerals shall be such as to be clearly visible and identifiable for fire fighters.

10.2.11 For ready reference in an emergency, a layout plan of the site shall be displayed at a suitable location. This plan shall indicate the position of all product tanks and the position of fire mains, hydrants and other fire-fighting equipment as well as the access routes for fire-fighting appliances to reach all points of the storage area.

10.2.12 A close co-operation with the relevant local authority is essential to ensure that they know in advance the layout of the storage area, what equipment and facilities are available and where they are located and how they are used.

10.2.13 An adequate joint plan of action in the event of fire, taking into account storage of other special risks that exist on site shall be agreed upon in advance with the relevant local authority concerned.

10.3 Maintenance of fire fighting facilities and equipment

Maintenance and routine testing shall be carried out as follows:

a) Any portable fire extinguisher shall be maintained in accordance with Singapore Standard SS CP 55.

b) Any fire extinguishing and exposure protection system shall be maintained and tested annually in accordance with the local or other standards acceptable to the relevant local authority.

c) Supplies of essential materials, e.g. foam concentrate, shall be maintained in quantities appropriate to the needs of the installation.

d) Any materials that are liable to deteriorate, e.g. foam concentrate, shall be checked at appropriate intervals to ensure their continued usefulness.

e) Record for each maintenance and testing operation shall be properly maintained.

10.4 Fire mains

10.4.1 For installations identified as having a higher fire potential, the basic fire fighting facilities shall have an independent fire grid main or ring main. The fire mains shall be supplied by fixed fire pumps from a suitable water source.

10.4.2 Size of the ring main and pumps shall be such as to provide sufficient quantity of water for the largest single risk identified within the overall installation to cater for the following:

a) extinguishing of fire;

b) exposure protection; and

c) supplementary for extinguishing and exposure protection.

10.4.3 The fire water supply shall be of an unlimited supply such as an open source. If, however, the fire water supply is limited, a fire water storage tank shall be provided, with a capacity equal to the fire water requirement for 1.5 hours for industrial premises and 6 hours for refineries and bulk storage terminals for continuous fire fighting.

10.4.4 The fire mains shall be provided with isolation valves and be located such that no damage or repair to the system requires the shut down of an artery or of a section of pipe of length greater than 100 m in high hazardous areas (e.g. process unit, tank compound, etc) and 300 m in low hazardous areas.

10.4.5 Fire mains may run aboveground in low hazardous areas, such as outside the battery limit of the process area.

10.4.6 Fire mains located within high hazardous areas shall be buried and be able to withstand the anticipated vehicular traffic on site e.g. the fire-fighting appliances, cranes, etc.

10.4.7 Fire water tanks

Where a fire water tank is provided, design of the fire water tank shall ensure that there will be no interruption to the fire fighting water supply from the fire water tank during maintenance. The fire water tank can be compartmentalised into 2 separate independent water-tight sections connected by a valve and piping system or by the provision of an alternative tank or source.

10.5 Fire pumps

For any installations, in addition to the duty fire pump(s), standby fire pump shall be provided. The requirements of the pumps shall be as follows:

a) The fire pumps shall be suitable for providing the total water requirement with a pressure of 1000 kN/m^2 at the furthest hazard location and with a design velocity of not more than 3.5 m/s in the fire mains. The fire pumps shall be capable of operation under any situation of emergency.

b) Only electric motor, diesel engine and steam turbine driven pumps are acceptable. For the diesel engine and emergency generator, the capacity of the fuel tank for the emergency generator shall be such that it can operate at full power for at least 6 hours.

c) The fire mains are to be continuously pressurised by one of the following means:

1) A separate, small electric driven pressurising pump connected in parallel with the fire pumps.

2) A "cross over connection" from the plant cooling water or process water system.

A low pressure cut in with alarm shall be provided to actuate the fire pump(s) at a specified pressure.

d) Manual starting and stopping of each fire pump shall be available at pump site. Remote starting of each fire pump shall be made available either from a control centre or on-site fire station.

e) All fire pumps shall be listed by a recognised institution (UL, FM, etc) accepted by the relevant local authority and be selected to meet the design requirements.

The fire pump set shall consist of at least two pumps (with equal capacity) and one of them to be reserved as standby. If more than two fire pumps (preferred to be equal capacity) are provided, one (or two) of them shall be reserved as standby for backing up any failure of the duty pump(s) and such standby pump(s) are able to provide minimum 50 % of the required flow rate and pressure. All duty and standby fire pumps shall be provided with secondary source of power supply except for engine driven fire pump.

10.6 Hydrant system

10.6.1 A hydrant system shall be provided and comply with the following:

a) Hydrants shall be provided with 2, 3 or 4 outlets for flammable liquid storage area. The outlets shall face the fire engine access road and be located such that the distance between hydrants and fire engine access road shall not exceed 5 m.

b) Spacing of hydrants shall not exceed 80 m.

c) When there are large pipe racks or drainage dikes that hinder access for hydrants to tanks or storage areas, adequate access paths or walkways shall be provided across such obstructions.

d) No hydrant shall be located within a tank compound.

e) Hydrants shall be of a pillar type made of steel with 100 - 150 mm diameter riser, all outlets with valve and of a design accepted by the local authority.

f) Pillar type hydrants shall be protected from accidental impact damage. Underground hydrants may be considered in locations where such pillar type hydrants are susceptible to damage.

g) The hydrants shall be so located that they are at least 10 m from potential fire areas.

10.6.2 For any installations, the following design criteria shall apply:

a) Flow rate through each outlet of the hydrants shall not be less than 700 L/min.

b) Water running pressure in hydrant(s) for the largest single risk identified shall not be less than 1000 kN/m^2.

c) The hose nozzle pressure shall not be less than 700 kN/m^2.

10.6.3 Fire hose boxes shall be installed near each hydrant and located not more than 80 m with the following minimum fire-fighting equipment:

a) Fire hoses (2 x 30 m) with necessary adaptor/fitting; and

b) Jet/Spray nozzle (1 number).

10.7 Fire extinguishment

The purpose is to ensure that sufficient water and foam is available for appropriate and effective extinguishment of tank fire.

10.7.1 Fire-fighting facilities for extinguishment of fires

Storage of flammable liquid and tankage areas shall be provided with fire fighting facilities for extinguishment of pool, rim, full surface and bund fires.

10.7.1.1 Foam application shall be by fixed, semi-fixed installation or by mobile/portable equipment. The type specified shall be dependent on:

a) type of products stored;

b) type of tank and its diameter;

c) layout of tank yard;

d) accessibility; and

e) CERT.

10.7.1.2 Fixed/semi-fixed foam equipment are fixed top pourers or base injection equipment and accessories on fixed roof/floating roof tanks.

10.7.2 Foam systems design requirements

10.7.2.1 The foam system design scenario involving single floating or fixed roof vertical tank shall be in accordance with the provisions in Table 10 in addition to exposure protection design requirements as stipulated under 10.8.2.

10.7.2.2 All fixed or semi-fixed foam systems shall be designed in accordance with accepted codes and standards or their equivalent such as NFPA 11.

10.7.2.3 in the case of application by portable fire extinguishing systems, the foam solution application rate shall be increased by 30 % to that specified under NFPA 11. This is to cater for wastage due to projection of such streams into the fire area. Similarly, the foam concentrate to be stored shall be 30 % more than that for a fixed installation system.

Table 10 – Foam systems

Type of tanks	Tank diameter	Type of foam systems required
Fixed roof tanks for Category 1, 2 and 3 flammable liquids	6 m or less	To provide portable fire extinguishing system operated by CERT for full surface fire.
	> 6 m	To provide fixed or semi-fixed system for full surface fire.
Floating roof tanks for Category 1, 2 and 3 flammable liquids	6 m or less	To provide portable fire extinguishing systems operated by CERT for full surface fire.
	> 6 m to 60 m	To provide fixed or semi-fixed system capable of extinguishing a rim seal and full surface fire.
	> 60 m	1. To provide fixed or semi-fixed system capable of extinguishing a rim seal fire or full surface fire of 60 m tank diameter, whichever is more severe. 2. To provide portable foam systems for full surface extinguishment through mutual aid resources for any shortfall specified in 1. above.
Fixed or floating roof tanks for Category 4 flammable liquids	45 m or less	To provide portable fire extinguishing systems operated by CERT for full surface fire if accessibility on site is sufficient. Otherwise, to provide fixed/semi-fixed system.
	> 45 m	1. To provide fixed or semi-fixed system for tank diameter greater than 45m and capable of extinguishing a full surface fire for up to 60 m tank diameter. 2. To provide portable foam systems for full surface extinguishment through mutual aid resources for any shortfall specified in 1. above.

NOTE 1 – Sufficient foam concentrate is to be provided based on Table 10 for the first hour of uninterrupted fire-fighting plus 100 % reserve for the second hour. However, the second hour 100% reserve foam compound can be provided through the mutual aid resources if the storage tank diameter is more than 60 m.

NOTE 2 – Installation with groups of tank less than total capacity of 60 m^3 and with individual capacity of 20 m^3 shall be exempted from the above requirements.

10.7.3 Supplementary extinguishment

Sufficient foam solution shall be available for extinguishing small spill fires in addition to foaming the tank on fire.

Foam hose stream equipment shall be provided as supplementary extinguishment of small spill fires. The equipment for producing foam stream shall have a foam solution rate of at least 2 x 500 L/min.

10.7.4 General requirements for foam concentrate

The foam concentrate shall comply with the following:

a) The type of foam used shall be determined on the basis of compatibility between the foam and the product being stored. When both conventional and specially formulated foam are susceptible to rapid deterioration when applied, the application methods, number of outlets, rates and duration shall be chosen to compensate for the increased network rate.

b) Foam concentrate shall be of the "low expansion mechanical foam" type and shall comply with the appropriate standard.

c) When base injection of foam into tanks is applied, the foam concentrate shall be approved for such use.

d) The foam generated shall be compatible with a dry chemical powder fire extinguishing medium.

e) Approved alcohol-resistant foam shall be available for use on a fire that involves water-miscible solvents.

f) All foam concentrate containers shall be clearly marked relevant to the type of compound they contain.

10.8 Fire exposure protection

The purpose is to provide sufficient resources in terms of water and equipment for fire exposure protection of vertical tanks storing flammable liquids adjacent to a tank on fire.

10.8.1 Acceptable provisions

All storage tanks containing flammable liquids shall be provided for means of protection against exposure. It may be extended to include "fixed systems", e.g. a fixed water spray system or fixed monitors, or alternatively portable monitors fed by fire mains. The type of system adopted shall be in consultation with the relevant local authority and will depend on:

a) location on site and potential of hazard to neighbouring occupancies;

b) accessibility of tankage area;

c) means of escape;

d) layout of tankage area; and

e) CERT.

10.8.2 Fixed and portable water application system

10.8.2.1 Design of fixed water spray system

The fixed water spray system for exposure protection of flammable liquid tanks shall be designed according to the following:

a) The design shall ensure that adequate coverage of both tank roof and side with a complete film of water is possible.

b) The system shall be designed to operate in independent sections each with its own operating valves. These valves shall be well identified, easily accessible and located at least 15 m away from the protected storage tanks up to 150 m^3 and at least 30 m for other larger tanks. These

distances may be reduced subject to the provision of a fire barrier - 2.5 m high and extend 1.5 m from the 2 end valves is deemed acceptable.

c) A minimum pressure of 345 to 440 kN/m^2 gauge shall be maintained and the minimum water application rate shall be provided as specified below.

d) Category 1, 2 and 3 flammable liquid tanks within 1.5 diameter of any tank on fire, shall be provided with fixed water spray protection. Application rate shall not be less than 2 L/min/m^2 applied over the exposed surface area of the tank shell and 0.25 times the surface area of the roof.

e) Category 4 flammable liquid tanks within 0.75 diameter of any tank on fire, shall be provided with water spray protection with application rate not less than 1 L/min/m^2 applied over the exposed surface area of the tank shell and 0.25 times the surface area of the roof. Fixed water spray protection is not required if there is sufficient accessibility to cool the tanks using portable monitors (not less than 2 numbers of 1500 L/min).

NOTE – Groups of Category 4 flammable liquid tanks with a total capacity of less than 100 m^3 and with individual capacity of less than 20 m^3 shall be exempted from the above requirements.

10.8.2.2 Portable system for exposure protection

The water demand for tanks protected by portable system shall be 30 % more than the fixed system.

10.8.2.3 Supplementary exposure protection

In addition to the above, water demand for 2 x 1500 L/min portable monitors for supplementary use is required.

10.8.3 Tank bund drain valve

Tank bund drain valve shall be provided to allow the accumulated fire fighting water within the tank farms to be drained by gravity. Such premises must be designed to ensure that the discharge outflow is greater than the worst case total incoming fire fighting water when the water level is at 80 % of the bund wall average internal height.

Such valves shall be kept closed at all times except when the bund is flooded with water during fire fighting operation.

10.9 Mobile and portable fire equipment

10.9.1 Mobile and portable water monitors

Sufficient number of mobile and portable water monitors shall be available where:

a) fixed/semi-fixed exposure protections are not provided; or

b) fixed/semi-fixed exposure protections are provided but rendered inoperative in a fire.

At least 4 numbers mobile and portable water monitors each of not less than 1500 L/min are to be provided in every installation for exposure protection against flame impingement.

Installation with groups of tank less than total capacity of 100 m^3 and with individual capacity of 20 m^3 shall be exempted from the above requirements.

10.9.2 Mobile and portable foam monitors

Mobile/portable foam monitors provided in accordance with the following are considered acceptable:

a) At least 2 numbers mobile/portable foam monitors each of not less than 2000 L/min are to be provided in every installation for extinguishment of fire; or

b) Sufficient numbers are provided for tanks up to 60 m diameter for full surface fire, regardless whether fixed/semi-fixed systems are available.

Installation with groups of tank less than total capacity of 100 m^3 and with individual capacity of 20 m^3 shall be exempted from the above requirements.

10.9.3 Foam tenders

Sufficient foam tenders shall be provided for semi-fixed or mobile/portable foam system and equipped with:

a) minimum foam generation capability of 3800 L/min; and

b) minimum pumping capability of 4500 L/min.

The minimum foam tenders required must always be available on site if back up could not be obtained within a reasonable time limit to fight a fire.

NOTE – Foam tenders refer to self-propelling vehicles or otherwise, capable of projecting foam solution into a burning tank through the semi-fixed foam system.

10.9.4 Foam carriers

Sufficient foam carriers shall be provided to supply foam to the foam tenders for continuous operation up to the required duration.

The minimum required number of foam carriers must always be available on site if back up is not available within a reasonable time limit.

NOTE – Foam carriers refer to self-propelling vehicles or otherwise, used to carry foam concentrate to the foam tenders.

10.9.5 Fire appliances – Access roads, access paths and lay-bys

In designing tank layout, lay-bys are to be provided for the fire fighting vehicles, foam equipment and mobile equipment. General acceptable provisions are:

a) Fire engine access roads shall be minimum 4.0 m wide with predetermined lay-bys for fire fighting purposes provided along the roads. The lay-bys provided should be at least 3.5 m wide and 15 m in length.

b) Where accessibility is only for the positioning of portable equipment for fire-fighting purposes and fire engine access road is not required, the deployment point to the nearest fire engine access road shall not be more 30 m and connected by an access path of minimum 3 m width.

10.9.6 Fire extinguishers

10.9.6.1 All Portable fire extinguishers shall be tested and comply with Singapore Standards SS 232 and CP 55 respectively.

10.9.6.2 The fire extinguishers shall be selected with the following criteria:

a) Alcohol-compatible foam shall be used for alcohol or other similar polar liquids.

b) Where both dry chemical and foam extinguishing agents are provided, and hence liable to be used together in an emergency, they shall be of types which are compatible with each other.

c) When applying dry chemical, carbon dioxide to chemical fires or to a flammable liquid fire where such liquid is heated either by process or by fire, personnel shall be alert to the danger of flashback or auto-ignition.

d) All fire extinguishers shall be protected against the weather.

10.9.6.3 In addition to any other requirements in this clause, fire extinguishers shall be provided in accordance with Table 11 for specific locations. In any of the cases listed, not less than two fire extinguishers shall be provided for the whole installation, and irrespective of its rating, each fire extinguisher on site shall have a capacity of not less than 9 kg.

Table 11 – Number of fire extinguishers

Specific area	Minimum requirements
1. Package filling sheds:	
Category 1, 2 and 3 flammable liquids	2 x 233B foam type and 2 x 233B 479B chemical type per 200 m^2 of floor area or part thereof. *(The travel distance between the hazard area and the fire extinguishers shall not be more than 7 m)*
Category 4 flammable liquids	1 x 233B foam or chemical type per 200 m^2 of floor area or part thereof.
2. Pump stations for handling flammable liquids	1 x 233B foam type and 1 x 233B dry chemical type per 50 m^2 of floor area or part thereof. *(The travel distance between the hazard area and the fire extinguishers shall not be more than 7 m)*
3. Loading and unloading points	2 x 233B foam type or 2 x 233B dry chemical type per every two vehicles loading and unloading positions but not less than 2 x 233B foam type and 2 x 233B chemical type per 200 m^2 of floor area or part thereof (floor area include the loading/unloading, staging and vehicular parking lots).

10.9.6.4 For small quantities of flammable liquid stored indoors e.g. safety cabinets, at least 1 fire extinguisher shall be provided which may be one of the following types:

a) 113B foam type (with min capacity of 6 kg); or

b) 113B dry chemical type (with min capacity of 6 kg).

10.9.6.5 For indoor package storage compartments, at least 4 times the total capacity of portable extinguishers specified in 10.9.6.4 shall be provided for each storage compartment and based on the 2 x 233B foam type (or 2 x 233B chemical type) per 200 m^2 of floor area. Each fire extinguisher shall have a capacity of not less than 9 kg.

10.9.6.6 Any external package storage shall also be provided based on the 2 x 233B foam type (or 2 x 233B chemical type) per 200 m^2 of floor area or part thereof.

NOTE – A 233B rating is allowed to be replaced by two of 113B rating. The fire extinguisher shall be located near to the hazardous area to be protected (3 m will be a good guide) and in general be placed adjacent to the main entrance or access point to such hazard. The travel distance between the hazard area and the fire extinguishers shall not be more than 10m unless it is specified elsewhere. This clause is mainly served as a guide for minimum provision of fire extinguisher and the individual operator should carry out their own risk assessment to ascertain the minimum number and rating of fire extinguishers for their operational needs. The maximum allowable travel distance may be reduced to 7 m if necessary.

10.10 Fire alarm system

Any fire alarm required for an installation storing flammable liquids shall comply with the following requirements:

a) Any automatic system shall also be capable of being manually activated at clearly identified positions.

b) The signal of any alarm system shall be sufficiently distinguishable from other signals to be readily recognised.

c) The power supply for any alarm system shall be independent of the main electricity isolating switch for the area.

d) A fire alarm system shall be connected to the decentralised alarm monitoring system (DECAM) company.

10.11 Fire fighting personnel (Company Emergency Response Team – CERT)

The purpose is to ensure sufficient and competent fire fighting personnel, whether auxiliaries or full timers shall be available on-site to tackle the largest single risk identified within the overall installation.

The CERT shall be able to respond within a reasonable time limit and adequately trained to handle fire-fighting equipment assigned to them and their response capability would be assessed during fire drills, exercises and audits that are conducted by the local regulatory authority.

Annex A

Tank venting

A.1 Venting atmospheric and low-pressure storage tanks

A.1.1 Normal venting capacity

The total normal venting capacity shall be at least the sum of the venting requirements for liquid movement and thermal effect due to maximum change in atmospheric temperature.

Vacuum relief (in-breathing)

– Total venting capacity (m^3/h) = 0.06 (maximum outflow in litres/min) + column 2 of Table A1

Pressure relief (out-breathing)

For liquid with a flash point of 38 °C or above:

– Total venting capacity (m^3/h) = 0.064 (maximum inflow in litres/min) + column 3 of Table A1

For liquid with a flash point below 38 °C:

– Total venting capacity (m^3/h) = 0.128 (maximum inflow in litres/min) + column 2 of Table A1

NOTE – Appendix K of API STD 620, Recommended Rules for Design and Construction of Large, Welded, Low-pressure Storage Tanks, states that the maximum inflow terms in the above formulas should be multiplied by the ratio of the absolute tank pressure to standard atmospheric pressure. This correction would be insignificant, and may be ignored, unless the tank pressure is substantially above atmospheric pressure.

A.1.2 Emergency venting capacity

The emergency venting capacity shall be not less than that given in Table A2.

The total venting requirements determined from Table A2 or Note 4 thereto are based on the assumption that the stored liquid will have the characteristics of hexane, since this will provide results which are within an acceptable degree of accuracy for almost all petroleum liquids encountered. However, if a greater degree of accuracy is desired, the total emergency venting requirement for any specific liquid may be determined by the following formula:

$$\text{Emergency venting capacity } (m^3/h) = \frac{3100V}{u\sqrt{M}}$$

Where:

V = emergency venting capacity from Table A2, in cubic metres per hour;

u = specific latent heat of vaporization of the liquid, in kilojoules per kilogram;

M = molecular mass of the liquid.

Full credit may be taken for the vent capacity provided for normal venting, since the normal thermal effect can be disregarded during a fire, and it can also be assumed that there will be no liquid movement into the tank.

Under certain conditions an environment factor may be applied in the calculation of the rate of emergency venting required; reference should be made to API STD 2000 which outlines appropriate factors.

A.2 Capacities of free orifice type vents

The capacity of a vent which consists of a free circular opening, or which is of such a simple construction that it practically is a free circular opening may be determined from Table A3 for 200 mm diameter or below.

For free circular openings larger than 200 mm in diameter, the following formula is used:

$$\text{Venting capacity } (m^3/h) = 0.0575 d^2 \sqrt{\Delta p}$$

Where:

d = diameter of orifice, in millimetres

Δp = difference in pressure between the inside and the outside of the tank, in kilopascals.

Table A1 – Thermal venting requirements

Tank capacity	Free air venting capacity (Notes 1 and 2) m^3/h	
m^3	Flash point < 38 °C	Flash point ≥ 38 °C
10	1.8	1.2
15	2.7	1.6
20	3.6	2.2
50	9.0	5.4
75	14	8.0
100	18	11
200	36	22
500	89	54
1000	178	107
2000	356	214
3000	534	320
4000	683	427
5000	828	498
6000	925	569
7000	1031	640
8000	1140	684
10000	1280	768
12000	1420	852
14000	1560	936
16000	1700	1024
18000	1845	1110
20000	1980	1192
25000	2290	1393
30000	2645	1575

NOTE 1 – Interpolate venting capacity for tanks of intermediate size.

NOTE 2 – At 101.5 kPa (absolute) and 15 °C.

Table A2 – Emergency venting capacity

Wetted area (Note 1) m^2	Free air venting capacity (Notes 2, 3) m^3/h	Wetted area (Note 1) m^2	Free air venting capacity (Notes 2, 3) m^3/h
1	321	35	8510
2	643	40	9200
3	964	45	9875
4	1286	50	10450
5	1607	55	11010
6	1929	65	12110
7	2250	75	13130
8	2572	85	14100
9	2893	95	15000
10	3214	110	15680
12	3857	130	16600
14	4500	150	17400
16	5143	170	18170
18	5786	200	19200
20	6200	230	20170
25	7030	260	21000
30	7800	(Note 4)	

NOTE 1 – The wetted area for a tank is calculated as follows:

a) Sphere or spheroid:– Total exposed surface up to the maximum horizontal diameter or to a height of 8 m, whichever is greater.

b) Horizontal tank: 75 % of the total exposed surface.

c) Vertical tank: Total exposed surface of the shell within a maximum height of 8 m above grade.

NOTE 2 – Interpolate venting capacity for intermediate values of wetted area.

NOTE 3 – At *101.5* kPa (absolute) and 15 °C.

NOTE 4 – If the wetted area exceeds 260 m^2 but the tank is designed for pressures of 7 kPa or lower, no increase in venting capacity is required. If the wetted area exceeds 260 m^2 and the tank is designed for pressures higher than 7 kPa, the *total* venting capacity is determined by the following formula:

Emergency venting capacity (m^3/h) = $220\ A^{0.82}$

Where:

A = *wetted* area, in square metres

Table A3 – Diameters of free circular openings

Venting capacity	Orifice diameter (Note 1), mm					
	Differential pressure, kPa					
m^3/h	0.25	0.50	0.75	7	17.5	35
50	42	35	32	32	32	32
100	60	50	45	32	32	32
250	93	78	71	41	32	32
500	132	111	100	57	46	38
750	162	136	123	70	56	47
1000	187	157	142	81	65	54
1250	-	175	158	91	72	61
1500	-	192	174	99	79	66
2000	-	-	200	115	91	77
4000	-	-	-	162	129	108
6000	-	-	-	200	158	133
8000	-	-	-	-	182	153
10000	-	-	-	-	200	172
12000	-	-	-	-	-	188
14000	-	-	-	-	-	200

NOTE 1 – Interpolate diameter for intermediate values of venting capacity and differential pressure.

STANDARDS, PRODUCTIVITY AND INNOVATION BOARD (SPRING SINGAPORE)

SPRING's mission is to enhance the competitiveness of enterprises for a vibrant Singapore economy. We work to nurture a pro-business environment that encourages enterprise formation and growth, facilitate the growth of industries, enhance productivity & innovation and capabilities of enterprises, and help increase access to markets and business opportunities. Our vision is to nurture a host of dynamic and innovative Singapore enterprises.

Strategic Thrust 1: Nurture a pro-business environment that encourages enterprise formation and growth

SPRING takes on the role of a steward to nurture a pro-business environment. In this role, SPRING helps to ensure that there is a conducive environment for enterprises to form, compete and grow. SPRING promotes the review and removal of rules and regulations that stifle enterprises. It also facilitates enterprise access to key factor inputs like land, labour, technology and finance.

Strategic Thrust 2: Facilitate the growth of industries

SPRING adopts an integrated cluster development approach in enhancing the vibrancy and competitiveness of selected industries.

Strategic Thrust 3: Enhance productivity & innovation and capabilities of enterprises

SPRING helps enterprises to enhance their productivity & innovation and capabilities. These include equipping enterprises with capabilities to upgrade their know-how, and creating conditions that encourage a productivity & innovation and service focus in enterprises. Focused assistance will be provided for promising enterprises.

Strategic Thrust 4: Increase access to markets and business opportunities

SPRING helps enterprises gain access to markets by reducing technical barriers to trade, providing quality assurance for Singapore products/services and linking local enterprises to business opportunities, both locally and overseas.

SPRING Singapore
2 Bukit Merah Central
Singapore 159835
Tel: 6278 6666
Fax: 6278 6667
E-mail: queries@spring.gov.sg
Website: http://www.spring.gov.sg

ABOUT THE NATIONAL STANDARDISATION PROGRAMME

SPRING is also the national standards body in Singapore. Under the national standardisation programme, SPRING Singapore helps companies and industry to meet international standards and conformity requirements by creating awareness of the importance of standardisation to enhance competitiveness and improve productivity, co-ordinating the development and use of Singapore Standards and setting up an information infrastructure to educate companies and industry on the latest developments.

SPRING Singapore is vested with the authority to appoint a Standards Council to advise on the preparation, publication and promulgation of Singapore Standards and Technical References and their implementation.

Singapore Standards are in the form of specifications for materials and products, codes of practice, methods of test, nomenclature, services, etc. The respective standards committee will draw up the standards before seeking final approval from the Standards Council. To ensure adequate representation of all viewpoints in the preparation of Singapore Standards, all committees appointed consist of representatives from various interest groups, which include government agencies, professional bodies, tertiary institutions and consumer, trade and manufacturing organisations.

Technical References are transition documents developed to help meet urgent industry demand for specifications or requirements on a particular product, process or service in an area where there is an absence of reference standards. Unlike Singapore Standards, they are issued for comments over a period of two years before assessment on their suitability for approval as Singapore Standards. All comments are considered when a technical reference is reviewed at the end of two years to determine the feasibility of its transition to a Singapore Standard. Technical References can therefore become Singapore Standards after two years, continue as Technical References for further comments or be withdrawn.

In the international arena, SPRING Singapore represents Singapore in the International Organisation of Standardisation (ISO), the Asia-Pacific Economic Co-operation (APEC) Sub-committee for Standards and Conformance (SCSC) and in the ASEAN Consultative Committee on Standards and Quality (ACCSQ). The Singapore National Committee of the International Electrotechnical Commission, which is supported by SPRING Singapore, represents Singapore in the IEC.