Singapore Standards Council

SS 638 : 2018
(ICS 29.020; 91.140.50)

SINGAPORE STANDARD

Code of practice for electrical installations

[Formerly CP 5]

Published by
Enterprise Singapore

SS 638 : 2018
(ICS 29.020; 91.140.50)

SINGAPORE STANDARD

Code of practice of electrical installations

All rights reserved. Unless otherwise specified, no part of this Singapore Standard may be reproduced or utilised in any form or by any means, electronic or mechanical, including photocopying and microfilming, without permission in writing from Enterprise Singapore. Request for permission can be sent to: standards@enterprisesg.gov.sg.

ISBN 978-981-48-3515-2

This Singapore Standard was approved on 17 September 2018 by the Electrical and Electronic Standards Committee under the purview of the Singapore Standards Council.

First published as CP 5, 1977
First revision, 1988
Second revision, 1998
Third revision and re-designated as SS 638, 2018

The Electrical and Electronic Standards Committee, appointed by the Standards Council, consists of the following members:

		Name	Capacity
Chairman	:	Er. Peter Leong Weng Kwai	*Individual Capacity*
Deputy Chairmen	:	Mr Andrew Chow	*Individual Capacity*
		Dr Kang Cheng Guan	*Energy Market Authority*
Advisor	:	Mr Renny Yeo Ah Kiang	*Individual Capacity*
Secretary	:	Mr Jason Low	*Enterprise Singapore*
Members	:	Dr Chua Sze Wey	*Agency for Science,Technology and Research*
		Mr Michael Goh Chye Soon	*Singapore Electrical Contractors and Licensed Electrical Workers Association*
		Assoc Prof Gooi Hoay Beng	*Nanyang Technological University*
		Dr Ashwin Khambadkone	*National University of Singapore*
		Mr Koh Liang Hock	*SP Group*
		Er. Kwang Cheok Sen	*Housing & Development Board*
		Er. Lim Say Leong	*Individual Capacity*
		Er. Ling Shiang Yun	*Association of Consulting Engineers Singapore*
		Er. Kenneth Liu	*Individual Capacity*
		Er. Hashim Bin Mansoor	*Building and Construction Authority*
		Mr Ng Soon Lee	*TUV SUD PSB Pte Ltd*
		Mr Sim Wee Meng	*Land Transport Authority*
		Mr Tan Beng Koon	*Singapore Manufacturing Federation*
		SAC Christopher Tan Eng Kiong	*Singapore Civil Defence Force*
		Er. Tan Hak Khoon	*Individual Capacity*
		Mr Roland Tan	*National Environment Agency*
		Er. Joseph Toh Siaw Hui	*The Institution of Engineers, Singapore*
		Mr Andrew Yap	*Enterprise Singapore*
		Mr Nelson Yeap	*Singapore Electrical Trades Association*

COPYRIGHT

The Technical Committee on Power System and Utilisation, appointed by the Electrical and Electronic Standards Committee and responsible for the preparation of this Singapore Standard, consists of representatives from the following organisations:

		Name	Capacity
Chairman	:	Er. Tan Hak Khoon	*Individual Capacity*
Deputy Chairman	:	Mr Koh Liang Hock	*Individual Capacity*
Secretary	:	Mr Ray Wang	*Enterprise Singapore*
Members	:	Er. Chan Chee Hin	*Ngee Ann Polytechnic*
		Mr Chia Song Khoon	*Land Transport Authority*
		Prof Lalit Kumar Goel	*Nanyang Technological University*
		Er. Ken Jung Gee Keong (till 15 August 2018)	*Singapore Electrical Contractors and Licensed Electrical Workers Association*
		Er. Adeline Koh	*Association of Consulting Engineers Singapore*
		Mr Lim Bock Teck	*Singapore Polytechnic*
		Er. Lim Say Leong	*Singapore Electrical Trades Association*
		Dr Thomas Reindl	*National University of Singapore*
		Mr Seng Chin Chye	*Institute of Technical Education*
		Er. Soh Swee Seng	*Housing & Development Board*
		Mr Tan Boon Chong	*Singapore Manufacturing Federation*
		Er. Tan Chong Poh	*SP Group*
		Dr Teo Tee Hui / Dr Tan Yen Kheng	*The Institution of Engineers, Singapore*
		Er. Yee Peng Huey	*JTC Corporation*
Co-opted Member	:	Er. Peter Toi Boon Bin	*Individual Capacity*

The Working Group on Electrical Installations, appointed by the Technical Committee to assist in the preparation of this Singapore Standard, comprises the following experts who contribute in their *individual capacity*:

		Name
Co-Convenors	:	Er. Peter Toi Boon Bin
		Er. Tan Hak Khoon
Secretary	:	Mr Allan Koh
Members	:	Er. Chan Chee Hin
		Er. Malvin Ho Hock Choon
		Er. Ken Jung Gee Keong (till 15 August 2018)
		Er. Kong Chee Seng
		Mr Lee Chee Whye
		Er. Lim Ah Hee
		Er. Lim Say Leong
		Er. Loh Wah Kay

COPYRIGHT

Members : Er. Ong Ser Huan
Er. Pang Boon Kiat
Er. Rao Yimin
Er. Joseph Toh Siaw Hui

The organisations in which the experts of the Working Group are involved are:

Association of Consulting Engineers Singapore
Energy Market Authority
Housing & Development Board
Institute of Technical Education
JTC Corporation
Land Transport Authority
Ngee Ann Polytechnic
Singapore Electrical Contractors and Licensed Electrical Workers Association
Singapore Electrical Trades Association
Singapore Polytechnic
SP Group
The Institution of Engineers, Singapore

COPYRIGHT

Contents

Page

National Foreword 8
Notes on the plan of the SS 638 : 2018 11

PART 1 – SCOPE, OBJECT AND FUNDAMENTAL PRINCIPLES 12
Chapter 11 Scope 14
Chapter 12 Object and effects 16
Chapter 13 Fundamental prinicples 17

PART 2 – DEFINITIONS 25

PART 3 – ASSESSMENT OF GENERAL CHARACTERISTICS 44
Chapter 30 Assessment of general characteristics 45
Chapter 31 Purpose, supplies and structure 45
Chapter 32 Classification of external influences 49
Chapter 33 Compatibility 49
Chapter 34 Maintainability 50
Chapter 35 Safety services 50
Chapter 36 Continuity of service 51

PART 4 – PROTECTION FOR SAFETY 52
Chapter 41 Protection against electric shock 55
Chapter 42 Protection against thermal effects 80
Chapter 43 Protection against overcurrent 88
Chapter 44 Reserved for future use 96

PART 5 – SELECTION AND ERECTION OF EQUIPMENT 97
Chapter 51 Common rules 102
Chapter 52 Selection and erection of wiring systems 110
Chapter 53 Protection, isolation, switching, control and monitoring 128
Chapter 54 Earthing arrangements and protective conductors 149
Chapter 55 Other equipment 159
Chapter 56 Safety services 179

COPYRIGHT

Page

PART 6 – INSPECTION AND TESTING 185
Chapter 61 Initial verification 186
Chapter 62 Periodic inspection and testing 192
Chapter 63 Certification and reporting 193

PART 7 – SPECIAL INSTALLATIONS OR LOCATIONS PARTICULAR REQUIREMENTS 194
Section 701L Locations containing a bath or shower 196
Section 702 Swimming pools and other basins 203
Section 703 Rooms and cabins containing sauna heaters 211
Section 704L Temporary electrical installations for construction and building sites 213
Section 705 Agricultural and horticultural premises 214
Section 706 Conducting locations with restricted movement 220
Section 708 Reserved for future use 221
Section 709 Reserved for future use 221
Section 710 Reserved for future use 221
Section 711 Reserved for future use 221
Section 712L Solar photovoltaic (PV) power supply systems 222
Section 714 Outdoor lighting installations 229
Section 715 Extra-low voltage lighting installations 231
Section 717 Reserved for future use 235
Section 721 Reserved for future use 235
Section 722L Electric vehicle charging system 235
Section 729 Operating and maintenance gangways 235
Section 740L Temporary electrical installations for festive lighting, trade-fairs, mini-fairs and exhibition sites 240
Section 753 Reserved for future use 240

ANNEXES

A(L) (informative) Medical locations 241
B(L) (informative) Revised cable colour code 255

APPENDICES

1(L) (normative) Standards to which reference is made in this Code 270
2(L) (informative) Statutory requirements 281
3 (informative) Time/current characteristics of overcurrent protective devices and rcds 282
4(L) (informative) Current-carrying capacity and voltage drop for cables 292
5(L) (informative) Classification of external influences 362
6(L) (informative) Standard methods of testing 376

COPYRIGHT

7(L) (normative) New cable core colours 380
8(L) (informative) Current-carrying capacity and voltage drop for busbar trunking systems 384
9(L) Reserved for future use 386
10(L) (informative) Protection of conductors in parallel against overcurrent 387
11(L) (informative) Effect of harmonic currents on balanced three-phase systems 392
12(L) (normative) Voltage drop in consumers' installations 393
13 (informative) Methods for measuring the insulation resistance/impedance of floors and walls to earth or to the protective conductor system 394
14(L) (informative) Measurement of earth fault loop impedence: Consideration of the increase of the resistance of conductors with increase of temperature 397
15(L) (informative) Ring and radial final circuit arrangements (see 433.1) 398
16 (informative) Devices for protection against overvoltage 401

INDEX 405

COPYRIGHT

National Foreword

This Singapore Standard was prepared by the Working Group on Electrical Installations appointed by the Technical Committee on Power System and Utilisation under the direction of the Electrical and Electronic Standards Committee.

This Code is a revision of Singapore Standard CP 5 : 1998 "Code of practice for electrical installations" and has been re-designated as SS 638 : 2018. It is a modified adoption of BS 7671 : 2008 "Requirements for electrical installations" incorporating Amendments 1, 2 and 3 and is reproduced with permission from BSI Standards Ltd and the Institution Engineering and Technology (IET). Neither BSI nor IET takes responsibility for the accuracy of the BSI/IET licensed materials reproduced in this Code.

The following modifications have been made to suit local conditions, practices and regulations:

- Replaced Foreword, Introduction and Notes with the National Foreword.
- Amended references from BS to SS or IEC where applicable.
- Restricted TN system to TN-S system only.
- Deleted the requirements not applicable in Singapore, mainly requirements on caravans, IT systems, PEN conductors, fault voltage devices, electric fences, TN and TN-CS systems, floor and ceiling heating systems, marinas and similar locations, certification, periodic inspection and testing.
- Deleted Section 708 "Electrical installations in caravan / camping parks and similar locations", Section 709 "Marinas and similar locations", Section 711 "Exhibitions, shows and stands", Section 717 "Mobile or transportable units", Section 721 "Electrical installations in caravans and motor caravans", Section 753 "Floor and ceiling heating systems" and Appendix 9 "Definitions – Multiple source, D.C. and other systems" as they are either not applicable in Singapore or there are separate Singapore Standards for these special installations or locations.
- Expanded the section on special installations or locations to enhance electrical safety.
- Deleted Chapter 44 "Protection against voltage disturbances and electromagnetic disturbances" and Annex A444 "Measures against electromagnetic disturbances (informative)" and moved Section 710 "Medical locations" to Annex A(L) as these are not normative requirements.
- Replaced Appendix 6(L) "Model forms for certification and reporting" with prescribed forms under our local regulations (see Chapter 63 "Certification and reporting").
- Added an informative national annex (Annex B(L) "Revised cable colour code").

Where an amendment has been made to suit local conditions, it is indicated by 'L' or '(L)' immediately after the clause number, term or table.

This Code has been drawn up to ensure safety, especially from electric shock and fire in the use of electricity and relates principally to the design, selection, erection, inspection and testing of electrical installations. It is not intended to take the place of detailed specification or to instruct untrained persons or to provide for every circumstance. For installations of a special or complex character, e.g. measures against electromagnetic disturbances, the advice of a suitably qualified professional engineer and consultation with the relevant authorities will be necessary.

COPYRIGHT

A summary of the main changes with respect to SS CP 5 : 1998 is given below:

- The revision adopts the new BS decimal point numbering system to make it easier to embody future changes and additions.

- The scope, object and fundamental principles set up in Part 1 are updated and enhanced.

- Definitions in Part 2 have been expanded and modified to provide a broader understanding of the local installation requirements.

- Part 3 adds requirements of safety services.

- In Chapter 41 "Protection against electric shock", the terms "protection against direct contact" becomes "basic protection" and "protection against indirect contact" becomes "fault protection".

- Chapter 42 "Protection against thermal effects" includes new sections on "Protection against fire caused by electrical equipment" and "Precautions where particular risks of fire exist".

- Chapter 43 "Protection against overcurrent" includes requirements previously listed in Chapter 47, Section 473 "Protection against overcurrent" of SS CP 5 : 1998.

- In Chapter 52 "Selection and erection of wiring systems", requirements of cables concealed in a wall or partition are added.

- In Chapter 53 "Protection, isolation, switching, control and monitoring", simplification means that requirements previously in Chapter 46, Section 476 "Isolation and switching" and Chapter 53, Section 537 "Isolating and switching devices" of SS CP 5 : 1998 are now in this single chapter. Devices for protection against risk of fire, overvoltage and monitoring devices are also included.

- In Chapter 55 "Other equipment", new requirements are added for low voltage generating sets, luminaries and street furniture are considered together with a new Section 557 "Auxiliary circuits".

- In Chapter 56 "Safety services", requirements for emergency escape lighting and fire protection applications are introduced.

- The previous Part 6 "Special installations or locations" has now become Part 7 "Special installations or locations particular requirements". Special locations are areas of increased shock risk for which more stringent requirements are necessary for electrical safety. The Code includes additional sections and updates on special installations or locations as follows:

  - Locations containing a bath or shower (Section 701L).
  - Construction and demolition site installations – deleted and will be considered in the revision of SS CP 88.
  - Solar photovoltaic (PV) power supply systems (Section 712L).
  - Outdoor lighting installations (Section 714).
  - Extra-low voltage lighting installations (Section 715).
  - Operating and maintenance gangways (Section 729).
  - Medical locations (Annex A(L)).
  - Section 607 in SS CP 5 : 1998 relating to high earth leakage currents has been incorporated into Chapter 54.

COPYRIGHT

- Changes to Appendices. Appropriate changes have been made to the existing Appendices 1 to 7. In addition, the following new Appendices are included:

  - Appendix 8(L) — Current-carrying capacity and voltage drop of busbar trunking system.
  - Appendix 10(L) — Protection of conductors in parallel against overcurrent.
  - Appendix 13 — Methods for measuring the insulation resistance / impedance of floors and walls to earth or to the protective conductor system.
  - Appendix 14(L) — Measurement of earth fault loop impedance: Consideration of the increase of the resistance of conductors with increase of temperature.
  - Appendix 16 — Devices for protection against overvoltage.

Attention is drawn to the possibility that some of the elements of this Singapore Standard may be the subject of patent rights. Enterprise Singapore shall not be held responsible for identifying any or all of such patent rights.

NOTE

1. *Singapore Standards (SSs) and Technical References (TRs) are reviewed periodically to keep abreast of technical changes, technological developments and industry practices. The changes are documented through the issue of either amendments or revisions.*

2. *An SS or TR is voluntary in nature except when it is made mandatory by a regulatory authority. It can also be cited in contracts making its application a business necessity. Users are advised to assess and determine whether the SS or TR is suitable for their intended use or purpose. If required, they should refer to the relevant professionals or experts for advice on the use of the document. Enterprise Singapore shall not be liable for any damages whether directly or indirectly suffered by anyone or any organisation as a result of the use of any SS or TR.*

3. *Compliance with a SS or TR does not exempt users from any legal obligations.*

COPYRIGHT

Notes on the Plan of the SS 638 : 2018

This edition is based on the plan agreed internationally for the arrangement of safety rules for electrical installations.

In the numbering system used, the first digit signifies a Part, the second digit a Chapter, the third digit a Section, the subsequent digits the clause number. For example, the Section number 413 is made up as follows:

PART 4 – PROTECTION FOR SAFETY
CHAPTER 41 (first chapter of PART 4) – PROTECTION AGAINST ELECTRIC SHOCK
Section 413 (third section of CHAPTER 41) – Protective measure electrical separation

Part 1. sets out the scope, object and fundamental principles.

Part 2. defines the sense in which certain terms are used throughout this Code, and provides a list of symbols used.

The subjects of the subsequent parts are indicated below:

Part No.	**Subject**
3.	Identification of the characteristics of the installation that will need to be taken into account in choosing and applying the requirements of the subsequent parts. These characteristics may vary from one part of an installation to another, and should be assessed for each location to be served by the installation.
4.	Description of the measurement that are available, for the protection of persons, property and livestock and against the hazards that may arise from the use of electricity.
5.	Precautions to be taken in the selection and erection of the equipment of the installation.
6.	Inspection and testing.
7.	Special installations or locations particular requirements.

The sequence of the plan should be followed in considering the application of any particular requirements of this Code. In addition, Annexes and Appendices are appended after Part 7. The general index provides a ready reference to particular clauses by subject, but in applying any one clause the requirements of related clauses should be borne in mind. Cross-reference are provided, and index is arranged to facilitate this.

In many cases a group of associated clauses is covered by a side heading which is identified by a two-part number, e.g. 544.2. Throughout this Code where reference is made to such a two-part number, that reference is to be taken to include all the individual clause numbers which are covered by that side heading that include the two-part number.

Numbering system	This Code introduced a new decimal point numbering system adopted in BS 7671: 2008 + A3: 2015 and clause numbering may not be in running sequence, e.g. 702.3 after 702.1 and 705.41 after 705.1L etc.

Where an amendment has been made to suit local condition, it is indicated by the letter 'L' or '(L)' immediately after the clause number, term or table where definition of the clause, term or table is provided. Reference elsewhere in this Code to the clause, term or table will be made without such indication.

COPYRIGHT

PART 1

SCOPE, OBJECT AND FUNDAMENTAL PRINCIPLES

CONTENTS

CHAPTER 11 SCOPE

110.1 General
110.2L Exclusions from scope
111 Reserved for future use
112 Reserved for future use
113 Equipment
114 Relationship with statutory regulations
115 Installations in premises subject to licensing

CHAPTER 12 OBJECT AND EFFECTS

120 General

CHAPTER 13 FUNDAMENTAL PRINCIPLES

131 Protection for safety
131.1 General
131.2 Protection against electric shock
131.3 Protection against thermal effects
131.4 Protection against overcurrent
131.5 Protection against fault current
131.6L Protection against voltage disturbances and measures against electromagnetic disturbances
131.7 Protection against power supply interruption

132 Design
132.1L General
132.2L Characteristics of available supply or supplies
132.3 Nature of demand
132.4 Electrical supply systems for safety services or standby electrical supply systems
132.5 Environmental conditions
132.6 Cross-sectional area of conductors
132.7 Type of wiring and method of installation
132.8 Protective equipment
132.9 Emergency control
132.10 Disconnecting devices
132.11 Prevention of mutual detrimental influence
132.12 Accessibility of electrical equipment
132.13 Documentation for the electrical installation
132.14 Protective devices and switches
132.15 Isolation and switching

COPYRIGHT

133 Selection of electrical equipment
133.1 General
133.2 Characteristics
133.3 Conditions of installation
133.4 Prevention of harmful effects
133.5L New materials and inventions

134 Erection and initial verification of electrical installations
134.1 Erection
134.2 Initial verification

135 Periodic inspection and testing

COPYRIGHT

PART 1

SCOPE, OBJECT AND FUNDAMENTAL PRINCIPLES

CHAPTER 11

SCOPE

110.1 General

110.1.1L This Code applies to the design, erection and verification of electrical installations other than those excluded by 110.2L.

Particular requirements are included for electrical installations of:

(i) residential premises

(ii) commercial premises

(iii) public premises

(iv) industrial premises

(v) agricultural and horticultural premises

(vi) prefabricated buildings

(vii) external lighting and similar installations

(viii) photovoltaic systems

(ix) low voltage generating sets

(x) highway equipment and street furniture

(xi) medical locations

(xii) operating and maintenance gangways.

NOTE – "Premises" covers the land and all facilities including buildings belonging to it.

110.1.2L This Code includes requirements for:

(i) circuits supplied at nominal voltages up to and including 1000 V a.c. or 1500 V d.c. For a.c., the preferred frequency which is taken into account in this Code is 50 Hz

(ii) circuits, other than the internal wiring of equipment, operating at voltages exceeding 1000 V and derived from an installation having a voltage not exceeding 1000 V a.c., e.g. discharge lighting, electrostatic precipitators

(iii) wiring systems and cables not specifically covered by the standards for appliances

(iv) all consumer installations external to buildings

(v) fixed wiring for information and communication technology, signalling, control and the like (excluding internal wiring of equipment)

(vi) additions and alterations to installations and also parts of the existing installation affected by an addition or alteration.

COPYRIGHT

110.1.3L This Code is intended to be applied to electrical installations generally but, in certain cases, they may need to be supplemented by the requirements or recommendations of other Singapore Standards or British Standards or Harmonised Standards or by the requirements of the person ordering the work.

Such cases include the following:

(i) Electric signs and high voltage luminous discharge tube installations – BS 559 and BS EN 50107

(ii) Design, installation and maintenance of emergency lighting and power supply systems in building – SS 563

(iii) Electrical apparatus for explosive gas atmospheres – IEC 60079

(iv) Electrical apparatus for use in the presence of combustible dust – BS EN 50281

(v) Installation and servicing of electrical fire alarm systems – SS CP 10

(vi) Telecommunications systems – BS 6701

(vii) Electric surface heating systems – IEC 60335-2-96

(viii) Electrical installations for open-cast mines and quarries – BS 6907

(ix) Life safety and firefighting applications – BS 8519.

110.2L Exclusions from scope

This Code does not apply to the following installations:

(i) Systems for the distribution of electricity to the public

(ii) Railway traction equipment, rolling stock and signalling equipment

(iii) Equipment of motor vehicles

(iv) Equipment on board ships covered by BS 8450

(v) Equipment of mobile and fixed offshore installations

(vi) Equipment of aircraft

(vii) **Reserved for future use**

(viii) Radio interference suppression equipment, except so far as it affects safety of the electrical installation

(ix) Lightning protection systems for buildings covered by the SS 555 series

(x) Those aspects of lift installations covered by SS 550

(xi) Electrical equipment of machines covered by IEC 60204

(xii) **Reserved for future use**

111 Reserved for future use

112 Reserved for future use

COPYRIGHT

113 Equipment

113.1L This Code applies to items of electrical equipment only so far as selection and application of the equipment in the installation are concerned. This Code does not deal with requirements for the construction of assemblies of electrical equipment, which are required to comply with appropriate standards.

114 Relationship with statutory regulations

114.1L The provisions in this Code, in their own merit, are not statutory requirements. However, compliance with this Code may be statutory requirements under the Acts and Regulations listed in Appendix 2(L).

115 Installations in premises subject to licensing

115.1 For installations in premises over which a licensing or other authority exercises a statutory control, the requirements of that authority shall be ascertained and complied with in the design and execution of the installation.

CHAPTER 12

OBJECT AND EFFECTS

120 General

120.1 This Code contains the rules for the design and erection of electrical installations so as to provide for safety and proper functioning for the intended use.

120.2 Chapter 13 states the fundamental principles. It does not include detailed technical requirements, which may be subject to modification because of technical developments.

120.3L This Code sets out technical requirements intended to ensure that electrical installations conform to the fundamental principles of Chapter 13, as follows:

Part 3 Assessment of general characteristics

Part 4 Protection for safety

Part 5 Selection and erection of equipment

Part 6 Inspection and testing

Part 7 Special installations or locations particular requirements.

Any intended departure of the installation from the provision of this Code shall require special consideration by the skilled person(s) responsible for design of the installation and shall be indicated on the single-line drawing and in the documentation required by 132.13. The resulting degree of safety of the installation shall be not less than that obtained by compliance with this Code.

120.4 Reserved for future use

COPYRIGHT

CHAPTER 13

FUNDAMENTAL PRINCIPLES

131 Protection for safety

131.1 General

The requirements of this chapter are intended to provide for the safety of persons, livestock and property against dangers and damage which may arise in the reasonable use of electrical installations. The requirements to provide for the safety of livestock are applicable in locations intended for them.

In electrical installations, risk of injury may result from:

(i) shock currents

(ii) excessive temperatures likely to cause burns, fires and other injurious effects

(iii) ignition of a potentially explosive atmosphere

(iv) undervoltages, overvoltages and electromagnetic disturbances likely to cause or result in injury or damage

(v) mechanical movement of electrically actuated equipment, in so far as such injury is intended to be prevented by electrical emergency switching or by electrical switching for mechanical maintenance of non- electrical parts of such equipment

(vi) power supply interruptions and/or interruption of safety services

(vii) arcing or burning, likely to cause blinding effects, excessive pressure and/or toxic gases.

131.2 Protection against electric shock

131.2.1 Basic protection (protection against direct contact)

NOTE – For low voltage installations, systems and equipment, 'basic protection' generally corresponds to protection against 'direct contact'.

Persons and livestock shall be protected against dangers that may arise from contact with live parts of the installation.

This protection can be achieved by one of the following methods:

(i) Preventing a current from passing through the body of any person or any livestock

(ii) Limiting the current which can pass through a body to a non-hazardous value.

131.2.2 Fault protection (protection against indirect contact)

NOTE – For low voltage installations, systems and equipment, 'fault protection' generally corresponds to protection against 'indirect contact', mainly with regard to failure of basic insulation.

Persons and livestock shall be protected against dangers that may arise from contact with exposed-conductive-parts during a fault.

This protection can be achieved by one of the following methods:

(i) Preventing a current resulting from a fault from passing through the body of any person or any livestock

COPYRIGHT

(ii) Limiting the magnitude of a current resulting from a fault, which can pass through a body, to a non-hazardous value

(iii) Limiting the duration of a current resulting from a fault, which can pass through a body, to a non-hazardous time period.

In connection with fault protection, the application of the method of protective equipotential bonding is one of the important principles for safety.

131.3 Protection against thermal effects

131.3.1 The electrical installation shall be so arranged that the risk of ignition of flammable materials due to high temperature or electric arc is minimised. In addition, during normal operation of the electrical equipment, there shall be minimal risk of burns to persons or livestock.

131.3.2 Persons, livestock, fixed equipment and fixed materials adjacent to electrical equipment shall be protected against harmful effects of heat or thermal radiation emitted by electrical equipment, and in particular the following:

(i) Combustion, ignition, or degradation of materials

(ii) Risk of burns

(iii) Impairment of the safe function of installed equipment.

Electrical equipment shall not present a fire hazard to adjacent materials.

131.4 Protection against overcurrent

Persons and livestock shall be protected against injury, and property shall be protected against damage, due to excessive temperatures or electromechanical stresses caused by any overcurrents likely to arise in live conductors.

NOTE – Protection can be achieved by limiting the overcurrent to a safe value and/or duration.

131.5 Protection against fault current

Conductors other than live conductors, and any other parts intended to carry a fault current, shall be capable of carrying that current without attaining an excessive temperature. Electrical equipment, including conductors, shall be provided with mechanical protection against electromechanical stresses of fault currents as necessary to prevent injury or damage to persons, livestock or property.

131.6L Protection against voltage disturbances and measures against electromagnetic disturbances

Refer to the relevant part of the IEC 61000 series and SS 555 series.

Note – A specialist may be engaged to perform the work.

131.7 Protection against power supply interruption

Where danger or damage is expected to arise due to an interruption of supply, suitable provisions shall be made in the installation or installed equipment.

131.8 Reserved for future

COPYRIGHT

132 Design

132.1L General

The electrical installation shall be designed to provide for:

(i) the protection of persons, livestock and property in accordance with Section 131

(ii) the proper functioning of the electrical installation for the intended use.

The information required as a basis for design is stated in 132.2L to 132.5. The requirements with which the design shall comply are stated in 132.6 to 132.16L.

132.2L Characteristics of available supply or supplies

Information on the characteristics of the available supply or supplies shall be determined by calculation, measurement, enquiry or inspection.

The following characteristics shall be included in the documentation referred to in 132.13 to show conformity with the clauses:

(i) Nature of current: a.c. and/or d.c.

(ii) Purpose and number of conductors:

– for a.c. line conductor(s)

neutral conductor

protective conductor

– for d.c. conductors equivalent to those listed above (outer/middle/earthed live conductors, protective conductor

(iii) Values and tolerances:

– nominal voltage and voltage tolerances

– nominal frequency and frequency tolerances

– maximum current allowable

– prospective short-circuit current

– external earth fault loop impedance

(iv) Protective measures inherent in the supply, e.g. earthed neutral or mid-wire

(v) Particular requirements of the supplier.

NOTE – If the supplier changes the characteristics of the power supply this may affect the safety of the installation.

132.3 Nature of demand

The number and type of circuits required for lighting, heating, power, control, signalling, communication and information technology, etc shall be determined from knowledge of:

(i) location of points of power demand

(ii) loads to be expected on the various circuits

(iii) daily and yearly variation of demand

(iv) any special conditions, such as harmonics

COPYRIGHT

(v) requirements for control, signalling, communication and information technology, etc.

(vi) anticipated future demand if specified.

132.4 Electrical supply systems for safety services or standby electrical supply systems

Where a supply for safety services or standby electrical supply systems is specified the following shall be determined:

(i) Characteristics of the supply

(ii) Circuits to be supplied by the safety source.

132.5 Environmental conditions

132.5.1 The design of the electrical installation shall take into account the environmental conditions to which it will be subjected.

132.5.2 Equipment in surroundings susceptible to risk of fire or explosion shall be so constructed or protected, and such other special precautions shall be taken, as to prevent danger.

132.6 Cross-sectional area of conductors

The cross-sectional area of conductors shall be determined for both normal operating conditions and, where appropriate, for fault conditions according to:

(i) the admissible maximum temperature

(ii) the admissible voltage drop

(iii) the electromechanical stresses likely to occur due to short-circuit and earth fault currents

(iv) other mechanical stresses to which the conductors are likely to be exposed

(v) the maximum impedance for correct operation of short-circuit and earth fault protection

(vi) the method of installation

(vii) harmonics

(viii) thermal insulation.

132.7 Type of wiring and method of installation

The choice of the type of wiring system and the method of installation shall include consideration of the following:

(i) The nature of the location

(ii) The nature of the structure supporting the wiring

(iii) Accessibility of wiring to persons and livestock

(iv) Voltage

(v) The electromechanical stresses likely to occur due to short-circuit and earth fault currents

(vi) Electromagnetic interference

(vii) Other external influences (e.g. mechanical, thermal and those associated with fire) to which the wiring is likely to be exposed during the erection of the electrical installation or in service.

COPYRIGHT

132.8 Protective equipment

The characteristics of protective equipment shall be determined with respect to their function, including protection against the effects of:

(i) overcurrent (overload and/or short-circuit)

(ii) earth fault current

(iii) overvoltage

(iv) undervoltage and no-voltage.

The protective devices shall operate at values of current, voltage and time which are suitably related to the characteristics of the circuits and to the possibilities of danger.

132.9 Emergency control

An interrupting device shall be installed in such a way that it can be easily recognised and effectively and rapidly operated where, in the case of danger, there is a necessity for immediate interruption of the supply.

132.10 Disconnecting devices

Disconnecting devices shall be provided so as to permit switching and/or isolation of the electrical installation, circuits or individual items of equipment as required for operation, inspection, testing, fault detection, maintenance and repair.

132.11 Prevention of mutual detrimental influence

The electrical installation shall be arranged in such a way that no mutual detrimental influence will occur between electrical installations and non-electrical installations.

Electromagnetic interference shall be taken into account.

132.12 Accessibility of electrical equipment

Electrical equipment shall be arranged so as to afford as may be necessary:

(i) sufficient space for the initial installation and later replacement of individual items of electrical equipment

(ii) accessibility for operation, inspection, testing, fault detection, maintenance and repair.

132.13 Documentation for the electrical installation

Every electrical installation shall be provided with appropriate documentation, including that required by 514.9, Part 6 and where applicable Part 7.

132.14 Protective devices and switches

132.14.1 A single-pole fuse, switch or circuit-breaker shall be inserted in the line conductor only.

132.14.2 No switch or circuit-breaker, except where linked, or fuse, shall be inserted in an earthed neutral conductor. Any linked switch or linked circuit-breaker inserted in an earthed neutral conductor shall be arranged to break all the related line conductors.

COPYRIGHT

132.15 Isolation and switching

132.15.201 Effective means, suitably placed for ready operation, shall be provided so that all voltage may be cut off from every installation, from every circuit thereof and from all equipment, as may be necessary to prevent or remove danger.

132.15.202 Every fixed electric motor shall be provided with an efficient means of switching off, readily accessible, easily operated and so placed as to prevent danger.

132.16L Additions and alterations to an installation

No addition or alteration, temporary or permanent, shall be made to an existing installation, unless it has been ascertained that the rating and the condition of any existing equipment, including that of the supplier, will be adequate for the altered circumstances. Furthermore, the earthing and bonding arrangements, if necessary for the protective measure applied for the safety of the addition or alteration, shall be adequate.

133 Selection of electrical equipment

133.1 General

133.1.1L Every item of equipment shall comply with the appropriate Singapore Standard. In the absence of such a standard, reference shall be made to the appropriate International (IEC) Standard.

133.1.2 Where there are no applicable standards, the item of equipment concerned shall be selected by special agreement between the skilled person(s) responsible for design and installation.

133.1.3 Where equipment to be used is not in accordance with 133.1.1L or is used outside the scope of its standard, the designer or other person responsible for specifying the installation shall confirm that the equipment provides at least the same degree of safety as that afforded by compliance with this Code.

133.2 Characteristics

Every item of electrical equipment selected shall have suitable characteristics appropriate to the values and conditions on which the design of the electrical installation (see Section 132) is based and shall, in particular, fulfil the requirements of 133.2.1 to 133.2 4.

133.2.1 Voltage

Electrical equipment shall be suitable with respect to the maximum steady-state voltage (rms value for a.c.) likely to be applied, as well as overvoltages likely to occur.

NOTE – For certain equipment, it may also be necessary to take account of the lowest voltage likely to occur.

133.2.2 Current

Electrical equipment shall be selected with respect to the maximum steady current (rms value for a.c.) which it has to carry in normal service and with respect to the current likely to be carried in abnormal conditions and the period (e.g. operating time of protective devices, if any) during which it may be expected to flow.

133.2.3 Frequency

Equipment shall be suitable for the frequencies likely to occur in the circuit.

COPYRIGHT

133.2.4 Power

Electrical equipment which is selected on the basis of its power characteristics shall be suitable for the duty demanded of the equipment, taking into account the load factor and the normal service conditions.

133.3 Conditions of installation

Electrical equipment shall be selected so as to withstand safely the stresses, the environmental conditions (see 132.5) and the characteristics of its location. An item of equipment which does not by design have the properties corresponding to its location may be used where adequate further protection is provided as part of the completed electrical installation.

133.4 Prevention of harmful effects

All electrical equipment shall be selected so that it will not cause harmful effects on other equipment or impair the supply during normal service, including switching operations.

NOTE – Examples of characteristics which are likely to have harmful effects are given in Chapter 33.

133.5L New materials and inventions

Where the use of a new material or invention leads to departures from this Code, the resulting degree of safety of the installation shall be not less than that obtained by compliance with this Code. Such departure shall be the subject of a written specification of a competent body, or skilled or instructed person or persons, and the installation shall not be described as complying with this Code.

134 Erection and initial verification of electrical installations

134.1 Erection

134.1.1 Good workmanship by skilled or instructed person or persons and proper materials shall be used in the erection of the electrical installation. Electrical equipment shall be installed in accordance with the instructions provided by the manufacturer of the equipment.

134.1.2 The characteristics of the electrical equipment, as determined in accordance with Section 133, shall not be impaired by the process of erection.

134.1.3 Conductors shall be identified in accordance with Section 514. Where identification of terminals is necessary, they shall be identified in accordance with Section 514.

134.1.4 Every electrical joint and connection shall be of proper construction as regards to conductance, insulation, mechanical strength and protection.

134.1.5 Electrical equipment shall be installed in such a manner that the design temperatures are not exceeded.

134.1.6 Electrical equipment likely to cause high temperatures or electric arcs shall be placed or guarded so as to minimise the risk of ignition of flammable materials.

Where the temperature of an exposed part of electrical equipment is likely to cause injury to persons or livestock that part shall be so located or guarded as to prevent accidental contact therewith.

134.1.7 Where necessary for safety purposes, suitable warning signs and/or notices shall be provided.

COPYRIGHT

134.2 Initial verification

134.2.1 During erection and on completion of an installation or an addition or alteration to an installation, and before it is put into service, appropriate inspection and testing shall be carried out by skilled or instructed person or persons to verify that the requirements of this Code have been met.

Appropriate certification shall be issued in accordance with Chapter 63.

134.2.2 The designer of the installation shall make a recommendation for the interval to the first periodic inspection and test as detailed in Part 6.

NOTE – The requirements of Chapter 34 should be taken into consideration.

135 Periodic inspection and testing

135.1 It is recommended that every electrical installation is subjected to periodic inspection and testing, in accordance with Chapter 62.

COPYRIGHT

PART 2

DEFINITIONS

For the purposes of the clauses, the following definitions shall apply. As far as practicable the definitions align with IEC 60050 "International Electrotechnical Vocabulary".

8/20 Current impulse. A current impulse with a virtual front time of 8 μs and a time to half-value of 20 μs where:

(i) the front time is defined as $1.25(t_{90} - t_{10})$, where t_{90} and t_{10} are the 90% and 10% points on the leading edge of the waveform

(ii) the time to half-value is defined as the time between the virtual origin and the 50% point on the tail. The virtual origin is the point where a straight line drawn through the 90% and 10% points on the leading edge of the waveform intersects the I= 0 line.

Accessory. A device, other than current-using equipment, associated with such equipment or with the wiring of an installation.

Agricultural and horticultural premises. Rooms, locations or areas where:

- livestock are kept, or
- feed, fertilizers, vegetable and animal products are produced, stored, prepared or processed, or
- plants are grown, such as greenhouses.

Ambient temperature. The temperature of the air or other medium where the equipment is to be used.

Appliance. An item of current-using equipment other than a luminaire or an independent motor.

Arm's reach. A zone of accessibility to touch, extending from any point on a surface where persons usually stand or move about to the limits which a person can reach with a hand in any direction without assistance (see Figure 417).

Arrangements for livestock keeping. Buildings and rooms (housing for animals), cages, runs or other containers used for continuous accommodation of livestock.

Back-up protection. Protection which is intended to operate when a system fault is not cleared, or abnormal condition not detected, in the required time because of failure or inability of other protection to operate or failure of the appropriate circuit-breaker(s) to trip.

Barrier. A part providing a defined degree of protection against contact with live parts from any usual direction of access.

Basic insulation. Insulation applied to live parts to provide basic protection and which does not necessarily include insulation used exclusively for functional purposes.

Basic protection. Protection against electric shock under fault-free conditions.

NOTE – For low voltage installations, systems and equipment, basic protection generally corresponds to protection against direct contact that is "contact of persons or livestock with live parts".

COPYRIGHT

Basin of fountain. A basin not intended to be occupied by persons and which cannot be accessed (reached by persons) without the use of ladders or similar means. For basins of fountains which may be occupied by persons, the requirements for swimming pools apply.

Bonding conductor. A protective conductor providing equipotential bonding.

Bonding network (BN). A set of interconnected conductive parts that provide a path for currents at frequencies from direct current (d.c.) to radio frequency (RF) intended to divert, block or impede the passage of electromagnetic energy.

Bonding ring conductor (BRC). A bus earthing conductor in the form of a closed ring.

NOTE – Normally the bonding ring conductor, as part of the bonding network, has multiple connections to the common bonding network (CBN) that improves its performance.

Booth. Non-stationary unit, intended to accommodate equipment generally for pleasure or demonstration purposes.

Building void, accessible. A space within the structure or the components of a building accessible only at certain points. Such voids include the space within partitions, suspended floors, ceilings and certain types of window frame, door frame and architrave.

Building void, non-accessible. A space within the structure or the components of a building which has no ready means of access.

Bunched. Cables are said to be bunched when two or more are contained within a single conduit, duct, ducting, or trunking or, if not enclosed, are not separated from each other by a specified distance.

Busbar trunking system. A type-tested assembly, in the form of an enclosed conductor system comprising solid conductors separated by insulating material. The assembly may consist of units such as:

- busbar trunking units, with or without tap-off facilities
- tap-off units where applicable
- phase-transposition, expansion, building-movement, flexible, end-feeder and adaptor units.

NOTE – Other system components may include tap-off units.

Bypass bonding conductor. Bonding conductor connected in parallel with the screens of cables.

Cable bracket. Reserved for future use

Cable channel. An enclosure situated above or in the ground, ventilated or closed, and having dimensions which do not permit the access of persons but allow access to the conduits and/or cables throughout their length during and after installation. A cable channel may or may not form part of the building construction.

Cable cleat. A component of a support system, which consists of elements spaced at intervals along the length of the cable or conduit and which mechanically retains the cable or conduit.

Cable coupler. A means of enabling the connection or disconnection, at will, of two flexible cables. It consists of a connector and a plug.

Cable ducting. An enclosure of metal or insulating material, other than conduit or cable trunking, intended for the protection of cables which are drawn in after erection of the ducting.

COPYRIGHT

Cable ladder. A cable support consisting of a series of transverse supporting elements rigidly fixed to main longitudinal supporting members.

Cable tray. A cable support consisting of a continuous base with raised edges and no covering. A cable tray may or may not be perforated.

Cable trunking. A closed enclosure normally of rectangular cross-section, of which one side is removable or hinged, used for the protection of cables and for the accommodation of other electrical equipment.

Cable tunnel. A corridor containing supporting structures for cables and joints and/or other elements of wiring systems and whose dimensions allow persons to pass freely throughout the entire length.

Cartridge fuse link. A device comprising a fuse element or two or more fuse elements connected in parallel enclosed in a cartridge usually filled with arc-extinguishing medium and connected to terminations (see Fuse link).

Central power supply system. A system supplying the required emergency power to essential safety equipment.

Central power supply system (low power output). Central power supply system with a limitation of the power output of the system at 500 W for 3 h or 1500 W for 1 h.

NOTE – A low power supply system normally comprises a maintenance-free battery and a charging and testing unit.

Circuit. An assembly of electrical equipment supplied from the same origin and protected against overcurrent by the same protective device(s).

Circuit-breaker. A device capable of making, carrying and breaking normal load currents and also making and automatically breaking, under predetermined conditions, abnormal currents such as short-circuit currents. It is usually required to operate infrequently although some types are suitable for frequent operation.

Circuit-breaker, linked. A circuit-breaker the contacts of which are so arranged as to make or break all poles simultaneously or in a definite sequence.

Circuit protective conductor (CPC). A protective conductor connecting exposed-conductive-parts of equipment to the main earthing terminal.

Class I equipment. Equipment in which protection against electric shock does not rely on basic insulation only, but which includes means for the connection of exposed-conductive-parts to a protective conductor in the fixed wiring of the installation (see IEC 61140).

Class II equipment. Equipment in which protection against electric shock does not rely on basic insulation only, but in which additional safety precautions such as supplementary insulation are provided, there being no provision for the connection of exposed metalwork of the equipment to a protective conductor, and no reliance upon precautions to be taken in the fixed wiring of the installation (see IEC 61140).

Class III equipment. Equipment in which protection against electric shock relies on supply at SELV and in which voltages higher than those of SELV are not generated (see IEC 61140).

Common equipotential bonding system, common bonding network (CBN). Equipotential bonding system providing both protective equipotential bonding and functional equipotential bonding.

COPYRIGHT

Conducting location with restricted movement. A location comprised mainly of metallic or conductive surrounding parts, within which it is likely that a person will come into contact through a substantial portion of their body with the conductive surrounding parts and where the possibility of preventing this contact is limited.

Conduit. A part of a closed wiring system for cables in electrical installations, allowing them to be drawn in and/or replaced, but not inserted laterally.

Connector. The part of a cable coupler or of an appliance coupler which is provided with female contacts and is intended to be attached to the end of the flexible cable remote from the supply.

Consumer unit (may also be known as a consumer control unit or electricity control unit). A particular type of distribution board comprising a type-tested co-ordinated assembly for the control and distribution of electrical energy, principally in domestic premises, incorporating manual means of double-pole isolation on the incoming circuit(s) and an assembly of one or more fuses, circuit-breakers, residual current operated devices or signalling and other devices proven during the type-test of the assembly as suitable for such use.

Continuous operating voltage (U_c). Maximum rms voltage which may be continuously applied to an SPD's mode of protection. This is equal to the rated voltage.

Controlgear (see Switchgear).

Current-carrying capacity of a conductor. The maximum current which can be carried by a conductor under specified conditions without its steady-state temperature exceeding a specified value.

Current-using equipment. Equipment which converts electrical energy into another form of energy, such as light, heat or motive power.

Danger. Risk of injury to persons (and livestock where expected to be present) from:

(i) fire, electric shock, burns, arcing and explosion arising from the use of electrical energy, and

(ii) mechanical movement of electrically controlled equipment, in so far as such danger is intended to be prevented by electrical emergency switching or by electrical switching for mechanical maintenance of non-electrical parts of such equipment.

Design current (of a circuit). The magnitude of the current (rms value for a.c.) to be carried by the circuit in normal service.

Device for connecting a luminaire (DCL). System comprising an outlet and a connector providing a fixed luminaire with electrical connection to and disconnection from a fixed installation but not providing mechanical support for a luminaire.

Direct contact (see Basic protection).

Disconnector. A mechanical switching device which, in the open position, complies with the requirements specified for the isolating function.

NOTE 1 – A disconnector is otherwise known as an isolator.

NOTE 2 – A disconnector is capable of opening and closing a circuit when either a negligible current is broken or made, or when no significant change in the voltage across the terminals of each pole of the disconnector occurs. It is also capable of carrying currents under normal circuit conditions and carrying for a specified time current under abnormal conditions such as those of short-circuit.

Discrimination. Ability of a protective device to operate in preference to another protective device in series.

COPYRIGHT

Distribution board. An assembly containing switching or protective devices (e.g. fuses, circuit-breakers, residual current operated devices) associated with one or more outgoing circuits fed from one or more incoming circuits, together with terminals for the neutral and circuit protective conductors. It may also include signalling and other control devices. Means of isolation may be included in the board or may be provided separately.

Distribution circuit. A circuit supplying a distribution board or switchgear. A distribution circuit may also connect the origin of an installation to an outlying building or separate installation, when it is sometimes called a sub-main.

Double insulation. Insulation comprising both basic insulation and supplementary insulation.

Duct, Ducting (see Cable ducting).

Earth. The conductive mass of the Earth, whose electric potential at any point is conventionally taken as zero.

Earth electrode. Conductive part, which may be embedded in the soil or in a specific conductive medium, e.g. concrete or coke, in electrical contact with the Earth.

Earth electrode network. Part of an earthing arrangement comprising only the earth electrodes and their interconnections.

Earth electrode resistance. The resistance of an earth electrode to Earth.

Earth fault current. A current resulting from a fault of negligible impedance between a line conductor and an exposed-conductive-part or a protective conductor.

Earth fault loop impedance (L). The impedance of the earth fault current loop starting and ending at the point of earth fault. This impedance is denoted by the symbol Z_s.

The earth fault loop comprises the following, starting at the point of fault:

- the circuit protective conductor, and
- the consumer's earthing terminal and earthing conductor, and
- for TN systems, the metallic return path, and
- for TT system, the Earth return path, and
- the path through the earthed neutral point of the transformer, and
- the transformer winding, and
- the line conductor from the transformer to the point of fault.

Earth leakage current (see Protective conductor current).

Earthing. Connection of the exposed-conductive-parts of an installation to the main earthing terminal of that installation.

Earthing conductor. A protective conductor connecting the main earthing terminal of an installation to an earth electrode or to other means of earthing.

Electric shock. A dangerous physiological effect resulting from the passing of an electric current through a human body or livestock.

Electrical circuit for safety services. Electrical circuit intended to be used as part of an electrical supply system for safety services.

COPYRIGHT

Electrical equipment (abbr: Equipment). Any item for such purposes as generation, conversion, transmission, distribution or utilisation of electrical energy, such as machines, transformers, apparatus, measuring instruments, protective devices, wiring systems, accessories, appliances and luminaires.

Electrical installation (abbr: Installation). An assembly of associated electrical equipment having co-ordinated characteristics to fulfil specific purposes.

Electrical source for safety services. Electrical source intended to be used as part of an electrical supply system for safety services.

Electrical supply system for safety services. A supply system intended to maintain the operation of essential parts of an electrical installation and equipment:

(i) for the health and safety of persons and livestock, and

(ii) to avoid damage to the environment and to other equipment.

NOTE – The supply system includes the source and the circuit(s) up to the terminals of the electrical equipment.

Electrically independent earth electrodes. Earth electrodes located at such a distance from one another that the maximum current likely to flow through one of them does not significantly affect the potential of the other(s).

Electrode boiler (or Electrode water heater). Equipment for the electrical heating of water or electrolyte by the passage of an electric current between electrodes immersed in the water or electrolyte.

Electronic convertor (Static convertor). A convertor having no moving parts and notably using semiconductor rectifiers.

Emergency stopping. Emergency switching intended to stop an operation.

Emergency switching. An operation intended to remove, as quickly as possible, danger, which may have occurred unexpectedly.

Enclosure. A part providing protection of equipment against certain external influences and in any direction providing basic protection.

Equipment (see Electrical equipment).

Equipotential bonding. Electrical connection maintaining various exposed-conductive-parts and extraneous-conductive-parts at substantially the same potential. (See also Protective equipotential bonding).

Escape route. Path to follow for access to a safe area in the event of an emergency.

Exposed-conductive-part. Conductive part of equipment which can be touched and which is not normally live, but which can become live under fault conditions.

External influence. Any influence external to an electrical installation which affects the design and safe operation of that installation.

Extra-low voltage (see Voltage, nominal).

Extraneous-conductive-part. A conductive part liable to introduce a potential, generally earth potential, and not forming part of the electrical installation.

COPYRIGHT

Fault. A circuit condition in which current flows through an abnormal or unintended path. This may result from an insulation failure or a bridging of insulation.

NOTE – Conventionally the impedance between live conductors or between live conductors and exposed- or extraneous-conductive-parts at the fault position is considered negligible.

Fault current. A current resulting from a fault.

Fault protection. Protection against electric shock under single fault conditions.

NOTE – For low voltage installations, systems and equipment, fault protection generally corresponds to protection against indirect contact, mainly with regard to failure of basic insulation. Indirect contact is "contact of persons or livestock with exposed-conductive-parts which have become live under fault conditions".

Final circuit. A circuit connected directly to current-using equipment, or to a socket-outlet or socket-outlets or other outlet points for the connection of such equipment.

Fixed equipment. Equipment designed to be fastened to a support or otherwise secured in a specific location.

Flexible cable. A cable whose structure and materials make it suitable to be flexed while in service.

Flexible wiring system. A wiring system designed to provide mechanical flexibility in use without degradation of the electrical components.

Follow-current interrupting rating. The level of prospective short-circuit current that an SPD is able to interrupt without back-up protection.

Functional bonding conductor. Conductor provided for functional equipotential bonding.

Functional earth. Earthing of a point or points in a system or in an installation or in equipment, for purposes other than electrical safety, such as for proper functioning of electrical equipment.

Functional extra-low voltage (FELV). An extra-low voltage system in which not all of the protective measures required for SELV or PELV have been applied.

Functional switching. An operation intended to switch 'on' or 'off' or vary the supply of electrical energy to all or part of an installation for normal operating purposes.

Fuse. A device which, by the melting of one or more of its specially designed and proportioned components, opens the circuit in which it is inserted by breaking the current when this exceeds a given value for a sufficient time. The fuse comprises all the parts that form the complete device.

Fuse carrier. The movable part of a fuse designed to carry a fuse link.

Fuse element. A part of a fuse designed to melt when the fuse operates.

Fuse link. A part of a fuse, including the fuse element(s), which requires replacement by a new or renewable fuse link after the fuse has operated and before the fuse is put back into service.

Fused connection unit. A device associated with the fixed wiring of an installation by which appliances may be connected, and having provision for a replaceable cartridge fuse link.

Gas installation pipe. Any pipe, not being a service pipe (other than any part of a service pipe comprised in a primary meter installation) or a pipe comprised in a gas appliance, for conveying gas for a particular consumer and including any associated valve or other gas fitting.

COPYRIGHT

Hazardous-live-part. A live part which can give, under certain conditions of external influence, an electric shock.

High-density livestock rearing. Breeding and rearing of livestock for which the use of automatic systems for life support is necessary.

NOTE – Examples of automatic life support systems are those for ventilation, feeding and air-conditioning.

High voltage (see Voltage, nominal).

Impulse current (I_{imp}). A parameter used for the classification test for SPDs; it is defined by three elements, a current peak value, a charge Q and a specific energy W/R.

Impulse withstand voltage. The highest peak value of impulse voltage of prescribed form and polarity which does not cause breakdown of insulation under specified conditions.

Indirect contact (see Fault protection).

Inspection. Examination of an electrical installation using all the senses as appropriate.

Installation (see Electrical installation).

Instructed person (L). A person adequately advised or supervised by a skilled person to enable that person to perceive risks and to avoid hazards which electricity can create.

Insulation. Suitable non-conductive material enclosing, surrounding or supporting a conductor.

Insulation co-ordination. The selection of the electric strength of equipment in relation to the voltages which can appear on the system for which the equipment is intended, taking into account the service environment and the characteristics of the available protective devices.

Isolation. A function intended to cut off for reasons of safety the supply from all, or a discrete section, of the installation by separating the installation or section from every source of electrical energy.

Isolator. A mechanical switching device which, in the open position, complies with the requirements specified for the isolating function. An isolator is otherwise known as a disconnector.

Ladder (see Cable ladder).

Leakage current. Electric current in an unwanted conductive path under normal operating conditions.

Lightning protection zone (LPZ). Zone where the lightning electromagnetic environment is defined.

Line conductor (L). A conductor of an a.c. system for the transmission of electrical energy other than a neutral conductor or a protective conductor.

Live part (L). A conductor or conductive part intended to be energised in normal use, including a neutral conductor.

Low voltage (see Voltage, nominal).

Low voltage switchgear and controlgear assembly. Combination of one or more low voltage switching devices together with associated control, measuring, signalling, protective, regulating equipment with all the internal electrical and mechanical interconnection and structural parts (see IEC 61439 series).

COPYRIGHT

Luminaire. Equipment which distributes, filters or transforms the light transmitted from one or more lamps and which includes all the parts necessary for supporting, fixing and protecting the lamps, but not the lamps themselves, and where necessary, circuit auxiliaries together with the means for connecting them to the supply.

NOTE – Lamps includes devices such as light emitting diodes.

Luminaire supporting coupler (LSC). A means, comprising an LSC outlet and an LSC connector, providing mechanical support for a luminaire and the electrical connection to and disconnection from a fixed wiring installation.

Main earthing terminal. The terminal or bar provided for the connection of protective conductors, including protective bonding conductors, and conductors for functional earthing, if any, to the means of earthing.

Maintenance. Combination of all technical and administrative actions, including supervision actions, intended to retain an item in, or restore it to, a state in which it can perform a required function.

Mechanical maintenance. The replacement, refurbishment or cleaning of lamps and non-electrical parts of equipment, plant and machinery.

Meshed bonding network (MESH-BN). Bonding network in which all associated equipment frames, racks and cabinets and usually the d.c. power return conductor are bonded together as well as at multiple points to the CBN and may have the form of a mesh.

NOTE – A MESH-BN improves the performance of a common bonding network.

Minor works. Additions and alterations to an installation that do not extend to the provision of a new circuit.

NOTE – Examples include the addition of socket-outlets or lighting points to an existing circuit, the relocation of a light switch etc.

Monitoring. Observation of the operation of a system or part of a system to verify correct functioning or detect incorrect functioning by measuring system variables and comparing the measured values with specified values.

Neutral conductor. A conductor connected to the neutral point of a system and contributing to the transmission of electrical energy. The term also means the equivalent conductor of d.c. system unless otherwise specified in the clauses and also identifies either the mid-wire of a three-wire d.c. circuit or the earthed conductor of a two-wire earthed d.c. circuit.

Nominal discharge current (I_{nspd}). A parameter used for the classification test for Class I SPDs and for preconditioning of an SPD for Class I and Class II tests; it is defined by the crest value of current through an SPD, having a current waveform of 8/20.

Nominal voltage (see Voltage, nominal).

Obstacle. A part preventing unintentional contact with live parts but not preventing deliberate contact.

Open-circuit voltage under standard test conditions $U_{oc\ STC}$. Voltage under standard test conditions across an unloaded (open) generator or on the d.c. side of the convertor.

Operating and maintenance gangway. Gangway providing access to facilitate operations such as switching, controlling, setting, observation and maintenance of electrical equipment.

Ordinary person. A person who is neither a skilled person nor an instructed person.

COPYRIGHT

Origin of an installation. The position at which electrical energy is delivered to an electrical installation.

Origin of the temporary electrical installation. Point on the permanent installation or other source of supply from which electrical energy is delivered to the temporary electrical installation.

Overcurrent. A current exceeding the rated value. For conductors the rated value is the current-carrying capacity.

Overcurrent detection. A method of establishing that the value of current in a circuit exceeds a predetermined value for a specified length of time.

Overload current. An overcurrent occurring in a circuit which is electrically sound.

PELV (protective extra-low voltage). An extra-low voltage system which is not electrically separated from Earth, but which otherwise satisfies all the requirements for SELV.

Phase conductor (see Line conductor).

Plug. Accessory having pins designed to engage with the contacts of a socket-outlet, and incorporating means for the electrical connection and mechanical retention of a flexible cable.

Point (in wiring). A termination of the fixed wiring intended for the connection of current-using equipment.

Portable equipment (see Mobile equipment).

Prefabricated wiring system. Wiring system consisting of wiring sections incorporating the means of interconnection designed to allow sections to be connected together to form a given system, and incorporating installation couplers conforming to IEC 61535.

Prospective fault current (I_{pf}). The value of overcurrent at a given point in a circuit resulting from a fault of negligible impedance between live conductors having a difference of potential under normal operating conditions, or between a live conductor and an exposed-conductive-part.

Protective bonding conductor. Protective conductor provided for protective equipotential bonding.

Protective conductor (PE). A conductor used for some measures of protection against electric shock and intended for connecting together any of the following parts:

(i) Exposed-conductive-parts

(ii) Extraneous-conductive-parts

(iii) The main earthing terminal

(iv) Earth electrode(s)

(v) The earthed point of the source, or an artificial neutral.

Protective conductor current. Electric current appearing in a protective conductor, such as leakage current or electric current resulting from an insulation fault.

Protective earthing. Earthing of a point or points in a system or in an installation or in equipment for the purposes of safety.

Protective equipotential bonding. Equipotential bonding for the purposes of safety.

COPYRIGHT

Protective separation. Separation of one electric circuit from another by means of:

(i) double insulation, or

(ii) basic insulation and electrically protective screening (shielding), or

(iii) reinforced insulation.

PV array. Mechanically and electrically integrated assembly of PV modules, and other necessary components, to form a d.c. power supply unit.

PV array cable. Output cable of a PV array.

PV array combiner (or junction) box. Enclosure where PV strings of any PV array are electrically connected and where devices can be located.

PV cell. Basic PV device which can generate electricity when exposed to light such as solar radiation.

PV d.c. main cable. Cable connecting the PV generator combiner box to the d.c. terminals of the PV inverter.

PV generator. Assembly of PV arrays.

PV generator combiner (or junction) box. Enclosure where PV arrays are electrically connected and where devices can be located.

PV installation. Erected equipment of a PV power supply system.

PV inverter (L). Device which converts d.c. voltage and d.c. current into a.c. voltage and a.c. current.

PV module. Smallest completely environmentally protected assembly of interconnected PV cells.

PV string. Circuit in which PV modules are connected in series, in order for a PV array to generate the required output voltage.

PV string cable. Cable connecting PV modules to form a PV string.

PV supply cable. Cable connecting the a.c. terminals of the PV inverter to a distribution circuit of the electrical installation.

Rated current. Value of current used for specification purposes, established for a specified set of operating conditions of a component, device, equipment or system.

Rated impulse withstand voltage level (U_w). The level of impulse withstand voltage assigned by the manufacturer to the equipment, or to part of it, characterising the specified withstand capability of its insulation against overvoltages.

NOTE – For the purposes of this Code, only withstand voltage between live conductors and earth is considered.

Reduced low voltage system. A system in which the nominal line-to-line voltage does not exceed 110 V and the nominal line to earth voltage does not exceed 63.5 V.

Reinforced insulation. Single insulation applied to live parts, which provides a degree of protection against electric shock equivalent to double insulation under the conditions specified in the relevant standard. The term 'single insulation' does not imply that the insulation shall be one homogeneous piece. It may comprise two or more layers which cannot be tested singly as supplementary or basic insulation.

COPYRIGHT

Residences and other locations belonging to agricultural and horticultural premises. Residences and other locations which have a conductive connection to the agricultural and horticultural premises by either protective conductors of the same installation or by extraneous-conductive-parts.

NOTE – Examples of other locations include offices, social rooms, machine-halls, workrooms, garages and shops.

Residential park home. A factory produced relocatable dwelling designed for permanent residence which may be used for leisure purposes.

Residual current. Algebraic sum of the currents in the live conductors of a circuit at a point in the electrical installation.

Residual current device (RCD). A mechanical switching device or association of devices intended to cause the opening of the contacts when the residual current attains a given value under specified conditions.

Residual current operated circuit-breaker with integral overcurrent protection (RCBO). A residual current operated switching device designed to perform the functions of protection against overload and/or short-circuit.

Residual current operated circuit-breaker without integral overcurrent protection (RCCB). A residual current operated switching device not designed to perform the functions of protection against overload and/or short-circuit.

Residual operating current. Residual current which causes the RCD to operate under specified conditions.

Resistance area (for an earth electrode only). The surface area of ground (around an earth electrode) on which a significant voltage gradient may exist.

Response time. The time that elapses between the failure of the normal power supply and the ability of the auxiliary power supply to energise the equipment.

Restrictive conductive location (see Conducting location with restricted movement).

Ring final circuit. A final circuit arranged in the form of a ring and connected to a single point of supply.

Safety service. An electrical system for electrical equipment provided to protect or warn persons in the event of a hazard, or essential to their evacuation from a location.

Sauna. A room or location in which air is heated, in service, to high temperatures where the relative humidity is normally low, rising only for a short period of time when water is poured over the heater.

SELV (separated extra-low voltage). An extra-low voltage system which is electrically separated from Earth and from other systems in such a way that a single fault cannot give rise to the risk of electric shock.

Selectivity (see Discrimination).

Shock (see Electric shock).

Shock current. A current passing through the body of a person or livestock such as to cause electric shock and having characteristics likely to cause dangerous effects.

COPYRIGHT

Short-circuit current. An overcurrent resulting from a fault of negligible impedance between live conductors having a difference in potential under normal operating conditions.

Short-circuit current under standard test conditions I_{sc_STC}. Short-circuit current of a PV module, PV string, PV array or PV generator under standard test conditions.

Simple separation. Separation between circuits or between a circuit and Earth by means of basic insulation.

Simultaneously accessible parts. Conductors or conductive parts which can be touched simultaneously by a person or, in locations specifically intended for them, by livestock.

NOTE – Simultaneously accessible parts may be: live parts, exposed-conductive-parts, extraneous-conductive-parts, protective conductors or earth electrodes.

Skilled person (L). A person who is licensed as an electrical worker under the Electricity (Electrical Workers) Regulations.

Socket-outlet. A device, provided with female contacts, which is intended to be installed with the fixed wiring, and intended to receive a plug. A luminaire track system is not regarded as a socket-outlet system.

Spur. A branch from a ring or radial final circuit.

Stand. Area or temporary structure used for display, marketing or sales.

Standard test conditions (STC). Test conditions specified in IEC 60904-3 for PV cells and PV modules.

Standby electrical source. Electrical source intended to maintain, for reasons other than safety, the supply to an electrical installation or a part or parts thereof, in case of interruption of the normal supply.

Standby electrical supply system. Supply system intended to maintain, for reasons other than safety, the functioning of an electrical installation or a part or parts thereof, in case of interruption of the normal supply.

Static convertor. A convertor having no moving parts and notably using semiconductor rectifiers.

Stationary equipment. Electrical equipment which is either fixed or which has a mass exceeding 18 kg and is not provided with a carrying handle.

Street furniture. Fixed equipment located on a highway.

NOTE – Street furniture includes street located equipment.

Street located equipment (L). Fixed equipment, located on a highway, the purpose of which is not directly associated with the use of the highway.

Supplementary insulation. Independent insulation applied in addition to basic insulation for fault protection.

Supplier (L). A person who supplies electrical energy, and, where electric lines and apparatus used for that purpose are owned otherwise than by that person, shall include the owner of those electric lines and apparatus.

Surge current. A transient wave appearing as an overcurrent caused by a lightning electromagnetic impulse.

COPYRIGHT

Surge protective device (SPD). A device that is intended to limit transient overvoltages and divert surge currents. It contains at least one non-linear component.

Switch. A mechanical device capable of making, carrying and breaking current under normal circuit conditions, which may include specified operating overload conditions, and also of carrying for a specified time current under specified abnormal circuit conditions such as those of short-circuit. It may also be capable of making, but not breaking, short-circuit currents.

Switch, linked. A switch the contacts of which are so arranged as to make or break all poles simultaneously or in a definite sequence.

Switch-disconnector. A switch which, in the open position, satisfies the isolating requirements specified for a disconnector.

NOTE – A switch-disconnector is otherwise known as an isolating switch.

Switchboard. An assembly of switchgear with or without instruments, but the term does not apply to groups of local switches in final circuits.

Switchgear. An assembly of main and auxiliary switching equipment for operation, regulation, protection or other control of an electrical installation.

System (L). An electrical system consisting of a single source or multiple sources running in parallel of electrical energy and an installation. See Part 3. For certain purposes of the clauses, types of system are identified as follows, depending upon the relationship of the source, and of exposed-conductive-parts of the installation, to Earth:

- **TN-S system**. A system having separate neutral and protective conductors throughout the system (see Figure 3.1).

- **TT system**. A system having one point of the source of energy directly earthed, the exposed-conductive- parts of the installation being connected to earth electrodes electrically independent of the earth electrodes of the source (see Figure 3.2).

Temporary electrical installation. Electrical installation erected for a particular purpose and dismantled when no longer required for that purpose.

Temporary overvoltage (U_{TOV}). A fundamental frequency overvoltage occurring on the network at a given location, of relatively long duration.

NOTE 1 – TOVs may be caused by faults inside the LV system ($U_{TOV,LV}$) or inside the HV system ($U_{TOV,HV}$).

NOTE 2 – Temporary overvoltages, typically lasting up to several seconds, usually originate from switching operations or faults (for example, sudden load rejection, single-phase faults, etc.) and/or from non-linearity (ferroresonance effects, harmonics, etc.).

Temporary structure. A unit or part of a unit, including mobile portable units, situated indoors or outdoors, designed and intended to be assembled and dismantled.

Temporary supply unit. An enclosure containing equipment for the purpose of taking a temporary electrical supply safely from an item of street furniture.

Testing. Implementation of measures to assess an electrical installation by means of which its effectiveness is proved. This includes ascertaining values by means of appropriate measuring instruments, where measured values are not detectable by inspection.

Triplen harmonics. The odd multiples of the 3rd harmonic of the fundamental frequency (e.g. 3rd, 9th , 15th, 21st).

COPYRIGHT

Trunking (see Cable trunking).

Verification. All measures by means of which compliance of the electrical installation with the relevant requirements of this Code are checked, comprising inspection, testing and certification.

Voltage, nominal. Voltage by which an installation (or part of an installation) is designated. The following ranges of nominal voltage (rms values for a.c.) are defined:

- **Extra-low.** Not exceeding 50 V a.c. or 120 V ripple-free d.c., whether between conductors or to Earth.

- **Low.** Exceeding extra-low voltage but not exceeding 1000 V a.c. or 1500 V d.c. between conductors, or 600 V a.c. or 900 V d.c. between conductors and Earth.

- **High.** Normally exceeding low voltage.

NOTE – The actual voltage of the installation may differ from the nominal value by a quantity within normal tolerances. See Appendix 2(L).

Voltage, reduced (see Reduced low voltage system).

Voltage band

Band I

Band I covers:

- installations where protection against electric shock is provided under certain conditions by the value of voltage;
- installations where the voltage is limited for operational reasons (e.g. telecommunications, signalling, bell, control and alarm installations).

Extra-low voltage (ELV) will normally fall within voltage Band I.

Band II

Band II contains the voltages for supplies to household and most commercial and industrial installations. Low voltage (LV) will normally fall within voltage Band II.

NOTE – Band II voltages do not exceed 1000 V a.c. rms or 1500 V d.c.

Voltage protection level (U_p). A parameter that characterises the performance of an SPD in limiting the voltage across its terminals, which is selected from a list of preferred values; this value is greater than the highest value of the measured limiting voltages.

Wiring system. An assembly made up of cable or busbars and parts which secure and, if necessary, enclose the cable or busbars.

COPYRIGHT

Figure 2.1 – Illustration of earthing and protective conductor terms (see Chapter 54)

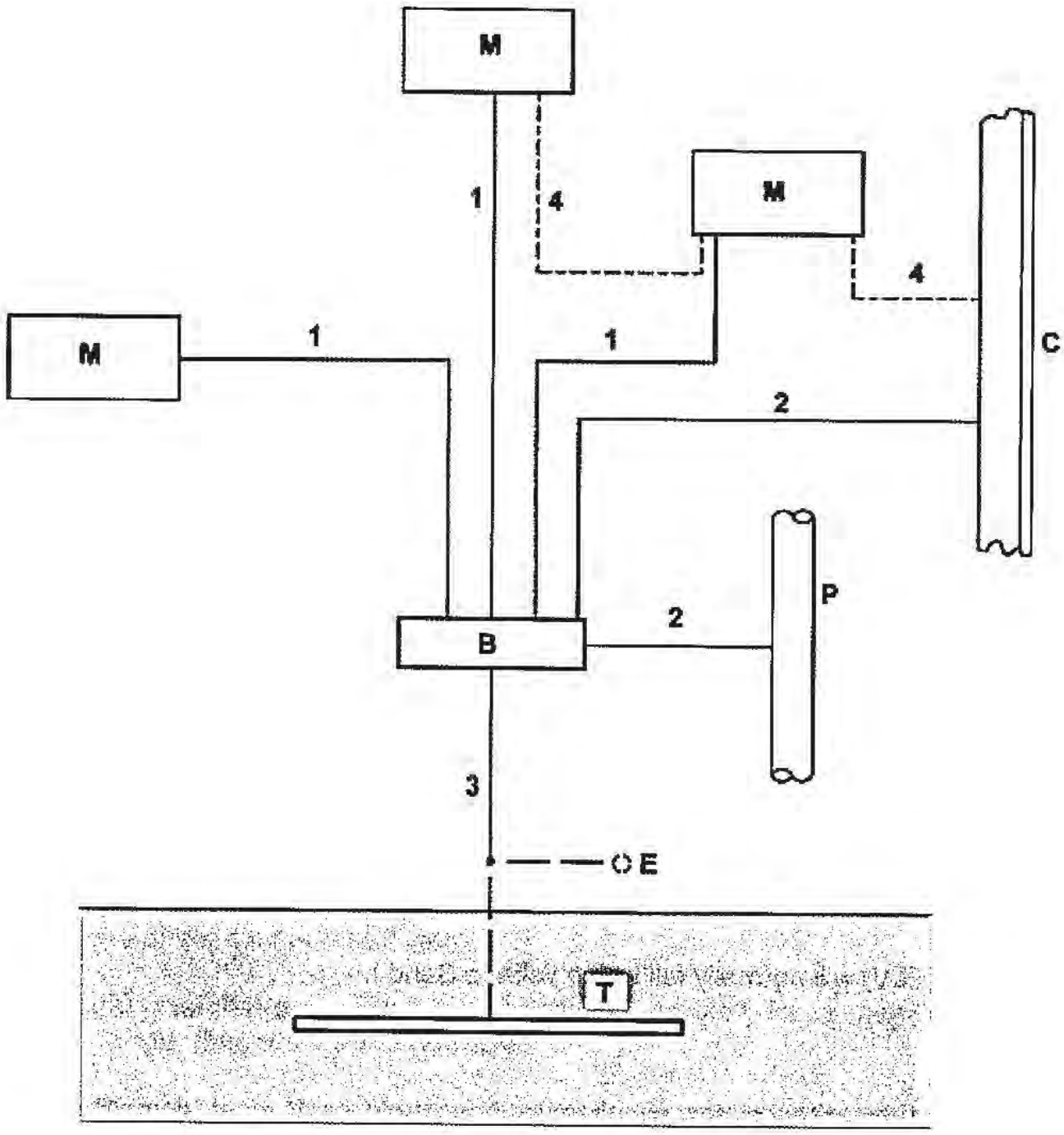

1,2,3,4, = protective conductors
1 = circuit protective conductor
2 = main protective bonding conductor
3 = earthing conductor
4 = supplementary protective bonding conductors (where required)
B = main earthing terminal
M = exposed-conductive-part
C = extraneous-conductive-part
P = main metallic water pipe (extraneous-conductive-part)
T = earth electrode (TT system)
E = other means of earthing (TN-S system)

COPYRIGHT

SYMBOLS USED IN THE CODE

Symbol	Meaning		Example
C	rating factor - general		Appx 4L Sec 4
C_a	rating factor for ambient temperature		Appx 4L Sec 4 Appx 4L Sec 6
C_g	rating factor for grouping		Appx 4L Sec 4 Appx 4L Sec 6 Table 4B1 Table 4B2
C_i	rating factor for conductors embedded in thermal insulation		Appx 4L Sec 4 Appx 4L Sec 6
C_t	rating factor for operating temperature of conductor		Appx 4L Sec 4 Appx 4L Sec 7
D_e	external cable diameter	mm	Table 4B1 Table 4B2S
ΣI_{zk}	the sum of the continuous current-carrying capacities of m conductors in parallel	A	Appx 10L Sec 2
gG	class 'gG' utilisation category of fuses to IEC 60269-2 – general use		411.4.6 411.4.8L 433.1.201 Table 41.2 Table 41.4 Table 41.5 Table 41.6L
gM	class 'gM' utilisation category of fuses to IEC 60269-2 – motor circuit application		411.4.6 411.4.8L Table 41.2 Table 41.4
	frequency in cycles per second	Hz	110.1.2L
H	third harmonic as a percentage of the fundamental line current		Appx 4 Sec 6
I	current (general term)	A	434.5.2L 543.1.3
I_a	current causing automatic operation of protective device within the time stated	A	411.4.5L 411.5.4 415.2.2 551.4.3.3.1 Appx 3 Appx 14L
I_b	design current of circuit	A	433.1.1 533.2.1 Appx 4 Sec 4 Appx 4 Sec 5 Appx 4 Sec 6 Appx 8L Appx 10L Sec 2
I_{b1}	design current including the effect of third harmonic currents	A	Appx 4L Sec 6 Appx 10L Sec 2
I_z	current-carrying capacity of a cable for continuous service under the particular installation conditions concerned	A	433.1.1 433.1.203 433.1.204L 533.2.1 Appx 4L Sec 4 Appx 4L Sec 5 Appx 4L Sec 6 Appx 8L Appx 10L Sec 2
I_{zk}	the continuous current-carrying capacity of conductor k	A	Appx 10L Sec 2
I^2t	energy let-through value of device	A	434.5.2L 543.1.3
I_2	current causing effective operation of the overload protective device	A	433.1.1 533.2.1 Appx 4L Sec 4
k	material factor taken from Table 43.1	$As^{1/2}mm^{-2}$	434.5.2L 543.1.3 Table 43.1 Table 54.2 Table 54.3 Table 54.4 Tabel 54.5 Table 54.6 Table 54.7
(mV/A/m)r	resistive voltage drop per ampere per metre	$mV_A^{-1}m^{-1}$	Appx 4L sec 7
(mV/A/m)x	reactive voltage drop per ampere per metre	$mV_A^{-1}m^{-1}$	Appx 4L sec 7
(mV/A/m)z	impedance voltage drop per ampere per metre	$mV_A^{-1}m^{-1}$	Appx 4L sec 7
R	resistance of supplementary bonding conductor	Ω	415.2.2 551.4.3.3.1
R_a	the sum of the resistances of the earth electrode and the protective conductor connecting it to the exposed-conductive-parts	Ω	411.5.3L
R_1	resistance of line conductor of a distribution or final circuit	Ω	Appx 6L
R_2	resistance of circuit protective conductor (cpc) of a distribution or final circuit	Ω	Appx 6L
S	size (nominal cross-sectional area of the conductor)	mm^2	434.5.2L 543.1.3 Table 54.7
$S_1...S_m$	cross-sectional area of parallel conductors	mm^2	Appx 10 Sec 2
S_k	cross-sectional area of conductor k	mm^2	Appx 10 Sec 2

COPYRIGHT

I_{bk}	design current for conductor k	A	Appx 10L Sec 2
I_{bn}	neutral current due to third harmonic currents	A	Appx 4L Sec 6
I_{cw}	rated short-time withstand current	A	434.5.3
I_f	50 Hz current	A	Appx 4L Sec 6
I_{hs}	5th harmonic current	A	Appx 4L Sec 6
I_{hn}	nth harmonic current	A	Appx 4L Sec 6
I_{imp}	impulse current	A	534.2.3.4 534.2.3.4.2 534.2.3.4.3 534.2.3.4.4 Part 2 Table 16A Appx 16
I_n	rated current or current setting of protective device	A	415.1.1 433.1.1 433.1.203 533.2.1 712.512.1.1L Appx 4L Sec 4 Appx 4L Sec 5 Appx 4L Sec 6 Appx 8L Appx 10L Sec 2 Appx 16
$I_{\Delta n}$	rated residual operating current of the protective device in amperes	A	411.5.3L 411.8.3L 415.2.2 531.2.10 Table 55.3
I_{nk}	rated current of the protective for conductor k	A	Appx 10L Sec 2
I_{nL}	fundamental line current	A	Appx 4L Sec 6
I_{nspd}	nominal discharge current	A	534.2.3.4 534.2.3.4.1 534.2.3.4.2 534.2.3.4.4 Part 2 Appx 16
I_{pf}	prospective fault current	A	Part 2
I_{sc_MOD}	short-circuit current for PV module	A	712.512.1.1L
$I_{MOD_MAX_OCPR}$	max over-current protection rating	A	712.512.1.1L
I_{sc_STC}	short-circuit current under standard test conditions	A	712.433.1 Part 2
I_t	tabulated current-carrying capacity of a cable	A	Appx 4L Sec 4 Appx 4L Sec 5 Appx 4L Sec 6
Z_1	the impedance of parallel conductor 1	Ω	Appx 10L Sec 2
Z_2	the impedance of parallel conductor 2	Ω	Appx 10L Sec 2
Z_e		Ω	313.1L Appx 6L
Z_k	the impedance of conductor k	Ω	Appx 10L Sec 2
Z_m	the impedance of parallel conductor m	Ω	Appx 10L Sec 2

t	time (period)	h	434.5.2L 543.1.3
t_p	maximum permitted normal operating conductor temperature	°C	Appx 4 Sec 7
U	conductor to conductor voltage	V	557.6.3
U_c	continuous operating voltage	V	534.2.3.2 Part 2
U_o	norminal a.c. rms line voltage to earth	V	411.4.5L 411.4.6 411.5.4 411.8.3L 557.6.3 Appx 3 Appx 14L Table 41.2 Table 41.3 Table 41.5 Table 41.6L
U_{oc}	open-circuit voltage	V	712.414.1.1 712.512.1.1L Part 2 Appx 16
$U_{o.spd}$	nominal a.c. rms line voltage of the low voltage system to earth	V	Table 53.3
$U_{oc\ STC}$	open-circuit voltage under standard test conditions	V	712.414.1.1 712.512.1.1L Part 2
U_p	voltage protection level	V	534.2.3.1.1L Part 2
U_{TOV}	temporary overvoltage	V	Part 2
U_W	rated impulse withstand voltage level	V	Part 2
U_x	voltage at test electrode to Earth (when measuring insulation resistance of floors and walls)	V	Appx 13

COPYRIGHT

Z_s	earth fault loop impedance	Ω	411.4.5L 411.4.6 411.4.7L 411.4.8L 411.5.2 411.5.3L 411.5.4 411.8.3L Part 2 Table 41.2 Table 41.3 Table 41.4 Table 41.5 Table 41.6L Appx 3 Appx 6L Appx 14L
$Z_{s(m)}$	measured earth fault loop impedance	Ω	Appx 14L
Z_x	impedance of floor insulation	Ω	Appx 13

COPYRIGHT

PART 3

ASSESSMENT OF GENERAL CHARACTERISTICS

CONTENTS

CHAPTER 30 ASSESSMENT OF GENERAL CHARACTERISTICS

301 Assessment of general characteristics

CHAPTER 31 PURPOSE, SUPPLIES AND STRUCTURE

311 Maximum demand and diversity

312 Conductor arrangement and system earthing
312.1L Number and type of live conductors
312.2L Types of system earthing
312.3 Reserved for future use
312.4L Reserved for future use

313 Supplies
313.1L General
313.2L Supplies for safety services and standby systems

314 Division of installation

CHAPTER 32 CLASSIFICATION OF EXTERNAL INFLUENCES

CHAPTER 33 COMPATIBILITY

331 Compatibility of characteristics
332 Electromagnetic compatibility

CHAPTER 34 MAINTAINABILITY

341 General

CHAPTER 35 SAFETY SERVICES

351 General
352 Classification

CHAPTER 36 CONTINUITY OF SERVICE

361 General

COPYRIGHT

PART 3

ASSESSMENT OF GENERAL CHARACTERISTICS

CHAPTER 30

ASSESSMENT OF GENERAL CHARACTERISTICS

301 Assessment of general characteristics

301.1 An assessment shall be made of the following characteristics of the installation in accordance with the chapters indicated:

(i) The purpose for which the installation is intended to be used, its general structure and its supplies (see Chapter 31)

(ii) The external influences to which it is to be exposed (see Chapter 32)

(iii) The compatibility of its equipment (see Chapter 33)

(iv) Its maintainability (see Chapter 34)

(v) Recognised safety services (see Chapter 35)

(vi) Assessment for continuity of service (see Chapter 36).

These characteristics shall be taken into account in the choice of methods of protection for safety (see Chapters 41 to 43) and the selection and erection of equipment (see Chapters 51 to 56).

CHAPTER 31

PURPOSE, SUPPLIES AND STRUCTURE

311 Maximum demand and diversity

311.1 For economic and reliable design of an installation within thermal limits and admissible voltage drop, the maximum demand shall be determined. In determining the maximum demand of an installation or part thereof, diversity may be taken into account.

312 Conductor arrangement and system earthing

The following characteristics shall be assessed:

(i) Arrangement of current-carrying conductors under normal operating conditions

(ii) Type of system earthing.

312.1L Number and type of live conductors

The number and type of live conductors (e.g. single-phase two-wire a.c., three-phase four wire a.c.) shall be determined both for the source of energy and for each circuit to be used within the installation. Where the source of energy is provided by a supplier, the supplier shall be consulted if necessary.

COPYRIGHT

312.2L Types of system earthing

The following types of system earthing are taken into account in this Code.

NOTE 1L – Figures 3.1 and 3.2 show examples of commonly used three-phase systems.

NOTE 2 – For private systems, the source and/or the distribution system may be considered as part of the installation within the meaning of this Code.

NOTE 3 – The codes used have the following meanings:

First letter – Relationship of the power system to Earth:

T = direct connection of one point to Earth;

Second letter – Relationship of the exposed-conductive-parts of the installation to Earth:

T = direct electrical connection of exposed-conductive-parts to Earth, independently of the earthing of any point of the power system;

N = direct electrical connection of the exposed-conductive-parts to the earthed point of the power system (in a.c. systems, the earthed point of the power system is normally the neutral point or, if a neutral point is not available, a line conductor).

Subsequent letter(s) (if any) – Arrangement of neutral and protective conductors:

S = protective function provided by a conductor separate from the neutral conductor or from the earthed line (or, in a.c. systems, earthed phase) conductor.

312.2.1L TN-S system

312.2.1.1L Single-source system

TN-S system has one point directly earthed at the source, the exposed-conductive parts of the installation(s) being connected to that point by protective conductors.

Figure 3.1 – TN-S system

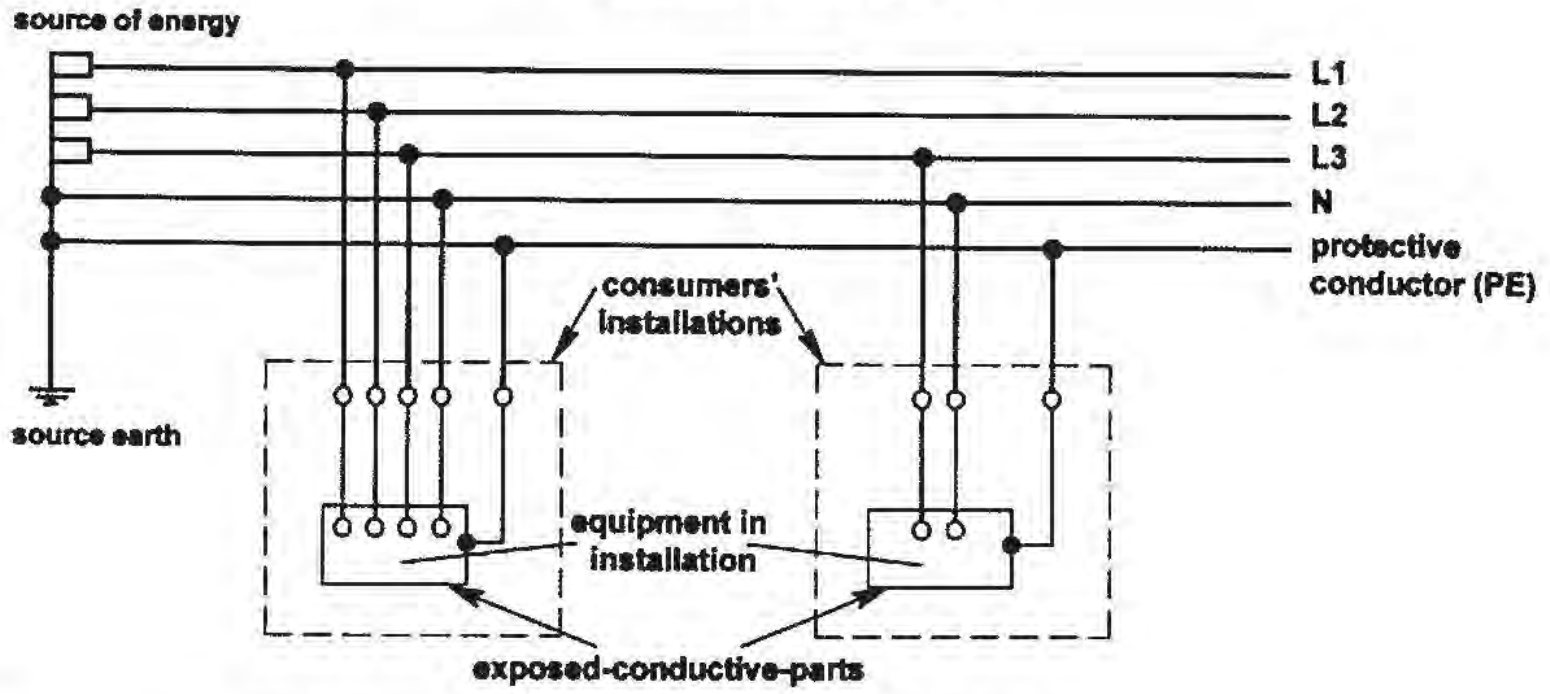

Separate neutral and protective conductors throughout the system.

The protective conductor (PE) is the metallic covering of the cable supplying the installations or a separate conductor.

All exposed-conductive-parts of an installation are connected to this protective conductor via the main earthing terminal of the installation.

COPYRIGHT

312.2.2 TT system

312.2.2.1 Single-source system

A TT system has only one point directly earthed at the source, the exposed-conductive-parts of the installation(s) being connected to earth electrodes electrically independent of the earth electrode of the supply system (the source earth).

Figure 3.2 – TT system

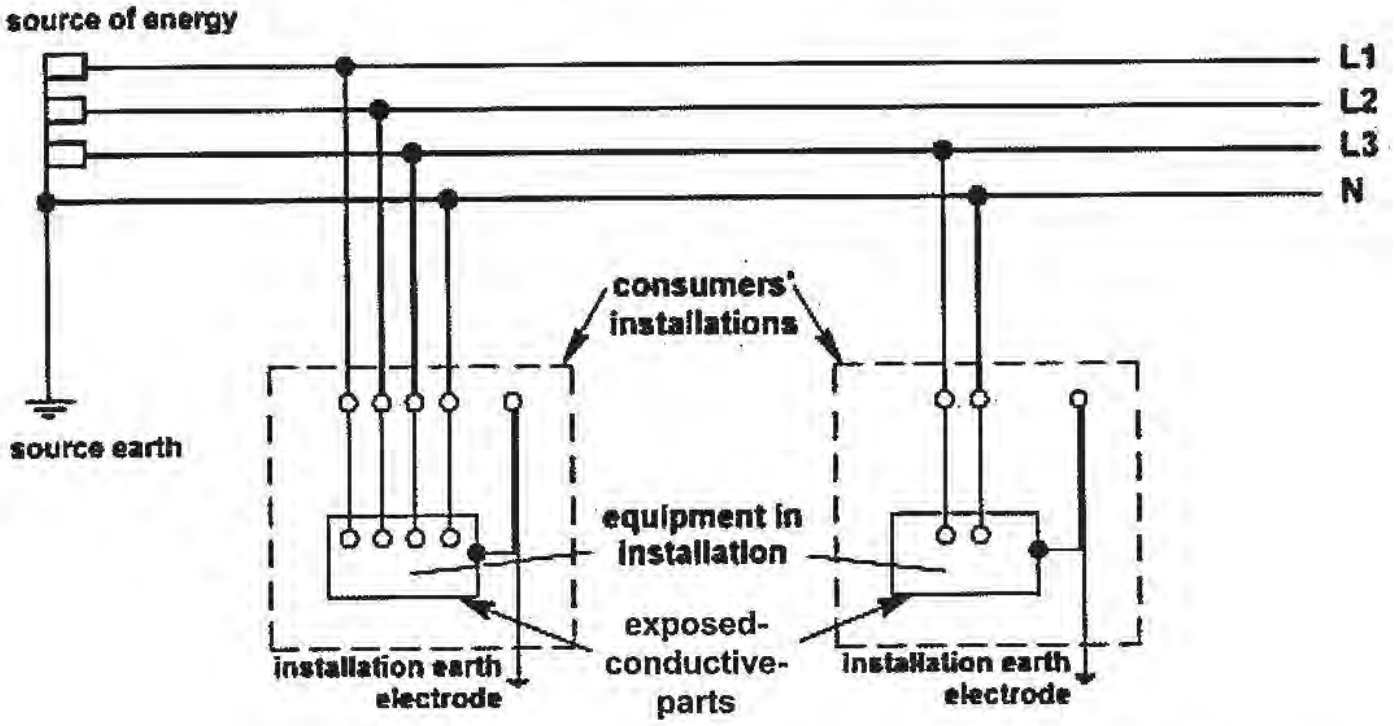

All exposed-conductive-parts of an installation are connected to an earth electrode which is electrically independent of the source earth.

Separate neutral and protective conductors throughout the system.

NOTE – Additional earthing of the PE in the installation may be provided. Only TN-S & TT Systems shall be allowed in Singapore.

312.3 Reserved for future use

312.4L Reserved for future use

313 Supplies

313.1L General

The following characteristics of the supply or supplies, from whatever source, and the normal range of those characteristics where appropriate, shall be determined by calculation, measurement, enquiry or inspection:

(i) The nominal voltage(s) and its characteristics including harmonic distortion

(ii) The nature of the current and frequency

(iii) The prospective short-circuit current at the origin of the installation

(iv) The earth fault loop impedance of that part of the system external to the installation, Z_e

(v) The suitability for the requirements of the installation, including the maximum demand

(vi) The type and rating of the overcurrent protective device(s) acting at the origin of the installation.

COPYRIGHT

These characteristics shall be ascertained for an external supply and shall be determined for a private source. These requirements are equally applicable to main supplies and to safety services and standby supplies.

NOTE – The above information should be provided by supplier on request.

313.2L Supplies for safety services and standby systems

Where the provision of safety services is required, for example, by the authorities concerned with fire precautions and other conditions for emergency evacuation of the premises, and/or where the provision of standby supplies is required by the person specifying the installation, the characteristics of the source or sources of supply for safety services and/or standby systems shall be separately assessed. Such supplies shall have adequate capacity, reliability and rating and appropriate changeover time for the operation specified.

NOTE 1 – For further requirements for supplies for safety services, see Chapter 35 hereafter and Chapter 56.

NOTE 2 – For standby systems, there are no particular requirements in these clauses, see SS 535.

314 Division of installation

314.1L Every installation shall be divided into circuits, as necessary, to:

(i) avoid danger and minimise inconvenience as far as possible in the event of a fault

(ii) facilitate safe inspection, testing and maintenance (see also Section 537)

(iii) take account of hazards that may arise from the failure of a single circuit such as a lighting circuit

(iv) reduce the possibility of unwanted tripping of RCDs due to excessive protective conductor (PE) currents not due to a fault

(v) mitigate the effects of electromagnetic disturbances.

(vi) prevent the indirect energising of a circuit intended to be isolated.

314.2 Separate circuits shall be provided for parts of the installation which need to be separately controlled, in such a way that those circuits are not affected by the failure of other circuits, and due account shall be taken of the consequences of the operation of any single protective device.

314.3 The number of final circuits required, and the number of points supplied by any final circuit, shall be such as to facilitate compliance with the requirements of Chapter 43 for overcurrent protection, Section 537 for isolation and switching and Chapter 52 as regards current-carrying capacities of conductors.

314.4 Where an installation comprises more than one final circuit, each final circuit shall be connected to a separate way in a distribution board. The wiring of each final circuit shall be electrically separate from that of every other final circuit, so as to prevent the indirect energising of a final circuit intended to be isolated.

COPYRIGHT

CHAPTER 32

CLASSIFICATION OF EXTERNAL INFLUENCES

Refer to Chapter 51 and Appendix 5(L).

CHAPTER 33

COMPATIBILITY

331 Compatibility of characteristics

331.1L An assessment shall be made of any characteristics of equipment likely to have harmful effects upon other electrical equipment or other services or likely to impair the supply, for example, for co-ordination with concerned parties e.g. petrol stations, kiosks and shops within shops. Those characteristics include, for example:

(i) transient overvoltages

(ii) undervoltage

(iii) unbalanced loads

(iv) rapidly fluctuating loads

(v) starting currents

(vi) harmonic currents

(vii) earth leakage current

(viii) excessive PE conductor current not due to a fault

(ix) d.c. feedback

(x) high-frequency oscillations

(xi) necessity for additional connections to Earth

(xii) power factor

(xiii) thermal effect.

For an external source of energy the supplier shall be consulted regarding any equipment of the installation having a characteristic likely to have significant influence on the supply.

332 Electromagnetic compatibility

332.1L All electrical equipment shall be in accordance with the relevant EMC standards.

332.2L Consideration shall be given by the designer of the electrical installation to measures reducing the effect of induced voltage disturbances and electromagnetic interferences (EMI). Measures are given in relevant part of the IEC 61000 series and SS 555 series.

COPYRIGHT

CHAPTER 34

MAINTAINABILITY

341 General

341.1 An assessment shall be made of the frequency and quality of maintenance the installation can reasonably be expected to receive during its intended life. The person or body responsible for the operation and/or maintenance of the installation shall be consulted. Those characteristics are to be taken into account in applying the requirements of Parts 4 to 7 so that, having regard to the frequency and quality of maintenance expected:

(i) any periodic inspection and testing, maintenance and repairs likely to be necessary during the intended life can be readily and safely carried out, and

(ii) the effectiveness of the protective measures for safety during the intended life shall not diminish, and

(iii) the reliability of equipment for proper functioning of the installation is appropriate to the intended life.

NOTE – There may be particular statutory requirements relating to maintenance.

CHAPTER 35

SAFETY SERVICES

351 General

NOTE 1 – The need for safety services and their nature are frequently regulated by statutory authorities whose requirements have to be observed.

NOTE 2 – Examples of safety services are: emergency escape lighting, fire detection and fire alarm systems, installations for fire pumps, fire rescue service lifts, smoke and heat extraction equipment.

351.1 The following electrical sources for safety services are recognised:

(i) Storage batteries

(ii) Primary cells

(iii) Generator sets independent of the normal supply

(iv) A separate feeder of the supply network that is effectively independent of the normal feeder (see 560.6.5L).

352 Classification

Refer to 560.4.

COPYRIGHT

CHAPTER 36

CONTINUITY OF SERVICE

361 General

361.1 An assessment shall be made for each circuit of any need for continuity of service considered necessary during the intended life of the installation e.g. life-support systems. The following characteristics shall be considered:

(i) Selection of the system earthing

(ii) Selection of the protective device in order to achieve discrimination

(iii) Number of circuits

(iv) Multiple power supplies

(v) Use of monitoring devices.

COPYRIGHT

PART 4

PROTECTION FOR SAFETY

CONTENTS

CHAPTER 41 PROTECTION AGAINST ELECTRIC SHOCK

410L Introduction
410.1 Scope
410.2 Reserved for future use
410.3 General requirements

411 Protective measure: automatic disconnection of supply
411.1L General
411.2 Requirements for basic protection
411.3 Requirements for fault protection
411.4L TN-S system
411.5 TT system
411.6L Reserved for future use
411.7 Functional Extra-Low Voltage (FELV)
411.8 Reduced low voltage systems

412 Protective measure double or reinforced insulation
412.1 General
412.2 Requirements for basic protection and fault protection

413 Protective measure electrical separation
413.1 General
413.2 Requirements for basic protection
413.3 Requirements for fault protection

414 Protective measure extra low voltage provided by SELV or PELV
414.1 General
414.2L Requirements for basic protection and fault protection
414.3L Sources for SELV and PELV
414.4 Requirements for SELV and PELV circuits

415 Additional protection
415.1 Additional protection: Residual current devices (RCDs)
415.2 Additional protection: Supplementary equipotential bonding

416 Provisions for basic protection
416.1 Basic insulation of live parts
416.2 Barriers or enclosures

417 Obstacles and placing out of reach
417.1L Application
417.2 Obstacles
417.3L Placing out of reach

COPYRIGHT

418L Protective measures for application only where the installation is controlled
418.1 Non-conducting location
418.2 Protection by earth-free local equipotential bonding
418.3L Electrical separation for the supply to more than one item of current-using equipment

CHAPTER 42 PROTECTION AGAINST THERMAL EFFECTS

420.1 Scope
420.2 Reserved for future use
420.3 Reserved for future use

421 Protection against fire caused by electrical equipment
421.1 General requirements
421.7 Reserved for future use

422 Precautions where particular risks of fire exist
422.1L General
422.2 Conditions for evacuation in an emergency
422.3L Locations with risks of fire due to the nature of processed or stored materials
422.4 Combustible constructional materials
422.5 Fire propagating structures
422.6L Selection and erection of installations in locations of national, commercial, industrial or public significance

423 Protection against burns

424 Protection against overheating
424.1L Forced air heating systems
424.2L Appliances producing hot water or steam

CHAPTER 43 PROTECTION AGAINST OVERCURRENT

430 Introduction
430.1 Scope
430.2 Reserved for future use
430.3 General requirement

431 Protection according to the nature of the circuits and the distribution system
431.1 Protection of line conductors
431.2 Protection of the neutral conductor
431.3 Disconnection and reconnection of the neutral conductor

432 Nature of protective devices
432.1 Protection against both overload current and fault current
432.2 Protection against overload current only
432.3 Protection against fault current only
432.4L Charateristics of protective devices

COPYRIGHT

433 Protection against overload current
433.1 Co-ordination between conductor and overload protective device
433.2 Position of devices for protection against overload
433.3 Omission of devices for protection against overload
433.4 Overload protection of conductors in parallel

434 Protection against fault current
434.1 Determination of prospective fault current
434.2 Position of devices for protection against fault current
434.3 Omission of devices for protection against fault current
434.4 Fault current protection of conductors in parallel
434.5 Characteristics of a fault current protective device

435 Co-ordination of overload current and fault current protection
435.1 Protection afforded by one device
435.2 Protection afforded by separate devices

436 Limitation of overcurrent by the characteristics of the supply

CHAPTER 44 RESERVED FOR FUTURE USE

COPYRIGHT

PART 4

PROTECTION FOR SAFETY

CHAPTER 41

PROTECTION AGAINST ELECTRIC SHOCK

410L Introduction

This chapter deals with protection against electric shock as applied to electrical installations. It is based on IEC 61140, which is a basic safety standard that applies to the protection of persons and livestock. IEC 61140 is intended to give fundamental principles and requirements that are common to electrical installations and equipment or are necessary for their co-ordination.

The fundamental rule of protection against electric shock, according to IEC 61140, is that hazardous-live-parts shall not be accessible and accessible conductive parts shall not be hazardous-live, either in use without a fault or in single fault conditions.

According to 4.2 of IEC 61140, protection under normal conditions is provided by basic protective provisions and protection under single fault conditions is provided by fault protective provisions. Alternatively, protection against electric shock is provided by an enhanced protective provision which provides protection in use without a fault and under single fault conditions.

In SS CP 5: 1998:

(i) protection in use without a fault (now designated basic protection) was referred to as protection against direct contact, and

(ii) protection under fault conditions (now designated fault protection) was referred to as protection against indirect contact.

410.1 Scope

Chapter 41 specifies essential requirements regarding protection against electric shock, including basic protection and fault protection of persons and livestock. It deals also with the application and co-ordination of these requirements in relation to external influences.

Requirements are given for the application of additional protection in certain cases.

410.2 Reserved for future use

410.3 General requirements

410.3.1 The following specification of voltage is intended unless stated otherwise:

– a.c. voltages are rms

– d.c. voltages are ripple-free.

410.3.2L A protective measure shall consist of:

(i) an appropriate combination of a provision for basic protection and an independent provision for fault protection, or

COPYRIGHT

(ii) an enhanced protective provision which provides both basic protection and fault protection.

Additional protection is specified as part of a protective measure under certain conditions of external influence and in certain special locations (see the corresponding sections of Part 7).

NOTE 1 – For special applications, protective measures which do not follow this concept are permitted (see 410.3.5 and 410.3.6).

NOTE 2 – An example of an enhanced protective measure is reinforced insulation.

410.3.3L In each part of an installation one or more protective measures shall be applied, taking account of the conditions of external influence.

The following protective measures generally are permitted:

(i) Automatic disconnection of supply (see Section 411)

(ii) Double or reinforced insulation (see Section 412)

(iii) Electrical separation for the supply to one item of current-using equipment (see Section 413)

(iv) Extra-low voltage (SELV and PELV) (see Section 414).

The protective measures applied in the installation shall be considered in the selection and erection of equipment.

For particular installations see 410.3.4 to 410.3.9.

NOTE – In electrical installations the most commonly used protective measure is automatic disconnection of supply.

410.3.4 For special installations or locations, the additional protective measures specified in the corresponding sections of Part 7 shall be applied.

410.3.5 The protective measures specified in Section 417, i.e. the use of obstacles and placing out of reach, shall be used only in installations where access is restricted to:

(i) skilled persons, or

(ii) instructed persons under the supervision of skilled persons.

410.3.6 The protective measures specified in Section 418L, i.e.

(i) non-conducting location

(ii) earth-free local equipotential bonding

(iii) electrical separation for the supply to more than one item of current-using equipment

shall be applied only where the installation is under the supervision of skilled or instructed persons so that unauthorised changes cannot be made.

410.3.7L If certain conditions of a protective measure cannot be met, supplementary provisions shall be applied so that the protective provisions together achieve the same degree of safety.

NOTE – An example of the application of this clause is given in 411.7 (FELV).

COPYRIGHT

410.3.8 Different protective measures applied to the same installation or part of an installation or within equipment shall have no influence on each other such that failure of one protective measure could impair the other protective measure or measures.

410.3.9 The provision for fault protection may be omitted for the following equipment:

(i) Metal supports of overhead line insulators which are attached to the building and are placed out of arm's reach

(ii) Steel reinforced concrete poles of overhead lines in which the steel reinforcement is not accessible

(iii) Exposed-conductive-parts which, owing to their reduced dimensions (approximate maximum of 50 mm x 50 mm) or their disposition, cannot be gripped or come into significant contact with a part of the human body and provided that connection with a protective conductor could only be made with difficulty or would be unreliable

NOTE – This exemption applies, for example, to bolts, rivets, nameplates, cable clips, screws and other fixings.

(iv) Metal enclosures protecting equipment in accordance with Section 412

(v) Unearthed street furniture supplied from an overhead line and inaccessible in normal use.

410.3.10L The protection measure by limitation of discharge of energy, such as electrification of fence shall be prohibited.

411 Protective measure: automatic disconnection of supply

411.1L General

Automatic disconnection of supply is a protective measure in which:

(i) basic protection is provided by basic insulation of live parts or by barriers or enclosures, in accordance with Section 416, and

(ii) fault protection is provided by protective earthing, protective equipotential bonding and automatic disconnection in case of a fault, in accordance with 411.3 to 411.6L.

Where this protective measure is applied, Class II equipment may also be used.

Where specified, the requirements for additional protection shall be provided by an RCD having the characteristics specified in 415.1.1.

NOTE – A residual current monitor (RCM) is not a protective device but it may be used to monitor residual currents in an electrical installation. An RCM produces an audible or audible and visual signal when a preselected value of residual current is reached.

411.2 Requirements for basic protection

All electrical equipment shall comply with one of the provisions for basic protection described in Section 416 (basic insulation; barriers or enclosures) or, where appropriate, Section 417 (obstacles; placing out of reach).

COPYRIGHT

411.3 Requirements for fault protection

411.3.1 Protective earthing and protective equipotential bonding

411.3.1.1L Protective earthing

Exposed-conductive-parts shall be connected to a protective conductor under the specific conditions for each type of system earthing as specified in 411.4 to 411.6L.

Simultaneously accessible exposed-conductive-parts shall be connected to the same earthing system individually, in groups or collectively.

Conductors for protective earthing shall comply with Chapter 54.

A circuit protective conductor shall be run to and terminated at each point in wiring and at each accessory except a lampholder having no exposed-conductive-parts and suspended from such a point.

411.3.1.2L Protective equipotential bonding

In each installation main protective bonding conductors complying with Chapter 54 shall connect to the main earthing terminal extraneous-conductive-parts including the following:

(i) Water installation pipes

(ii) Gas installation pip

(iii) Other installation pipework and ducting

(iv) Central heating and air conditioning systems

(v) Exposed metallic structural parts of the building.

Connection of a lightning protection system to the protective equipotential bonding shall be made in accordance with the SS 555 series and SS 551.

Where an installation serves more than one building the above requirement shall be applied to each building.

To comply with the requirements of these clauses it is also necessary to apply equipotential bonding to any metallic sheath of a telecommunication cable. However, the consent of the owner or operator of the cable shall be obtained.

411.3.2 Automatic disconnection in case of a fault

411.3.2.1L Except as provided by 411.3.2.5L and 411.3.2.6L, a protective device shall automatically interrupt the supply to the line conductor of a circuit or equipment in the event of a fault of negligible impedance between the line conductor and an exposed-conductive-part or a protective conductor in the circuit or equipment within the disconnection time required by 411.3.2.2L, 411.3.2.3L or 411.3.2.4L.

411.3.2.2L The maximum disconnection time stated in Table 41.1 shall be applied to final circuits not exceeding 32 A.

COPYRIGHT

Table 41.1 – Maximum disconnection times

System	50 V < U_0 ≤ 120 V seconds		120 V < U_0 ≤ 230 V seconds		230 V < U_0 ≤ 400 V seconds		U_0 > 400 V seconds	
	a.c.	d.c.	a.c.	d.c.	a.c.	d.c.	a.c.	d.c.
TN-S	0.8	See NOTE below	0.4	5	0.2	0.4	0.1	0.1
TT	0.3	See NOTE below	0.2	0.4	0.07	0.2	0.04	0.1

Where, in a TT system, disconnection is achieved by an overcurrent protective device and protective equipotential bonding is connected to all the extraneous-conductive-parts within the installation in accordance with 411.3.1.2L, the maximum disconnection times applicable to a TN-S system may be used.

U_0 is the nominal a.c. rms or d.c. line voltage to earth.

Where compliance with this clause is provided by an RCD, the disconnection times in accordance with Table 41.1 relate to prospective residual fault currents significantly higher than the rated residual operating current of the RCD.

NOTE – Disconnection is not required for protection against electric shock but may be required for other reasons, such as protection against thermal effects.

411.3.2.3L In a TN-S system, a disconnection time not exceeding 5 s is permitted for a distribution circuit and for a circuit not covered by 411.3.2.2L.

411.3.2.4L In a TT system, a disconnection time not exceeding 1 s is permitted for a distribution circuit and for a circuit not covered by 411.3.2.2L.

411.3.2.5L For a system with a nominal voltage U_0 greater than 50 V a.c. or 120 V d.c., automatic disconnection in the time required by 411.3.2.2L, 411.3.2.3L or 411.3.2.4L, as appropriate, is not required if, in the event of a fault to a protective conductor or Earth, the output voltage of the source is reduced in not more than that time to 50 V a.c. or 120 V d.c. or less. In such a case consideration shall be given to disconnection as required for reasons other than electric shock.

411.3.2.6L Where automatic disconnection according to 411.3.2.1L cannot be achieved in the time required by 411.3.2.2L, 411.3.2.3L or 411.3.2.4L, as appropriate, supplementary equipotential bonding shall be provided in accordance with 415.2.

411.3.3L Additional protection

In a.c. systems, additional protection by means of an RCD in accordance with rated residual operating current not exceeding 30 mA in accordance with 415.1 shall be provided for:

(i) socket-outlets with a rated current not exceeding 32 A that are for use by ordinary persons and are intended for general use, and

(ii) portable equipment with a current rating not exceeding 32 A for use outdoors.

In addition, for domestic installations, all socket outlet and lighting circuits shall be protected by one or more RCD with rated residual operating current not exceeding 30 mA in accordance with 415.1.

COPYRIGHT

An exception to (i) is permitted for socket- outlets serving fire alarms, battery chargers, public address and medical equipment or equipment with inherent high leakage current. For such applications, alternative method of protection shall be provided and the affected socket- outlets shall be labelled and clearly identified.

NOTE 1 – See also 314.1L(iv) and 531.2.4 concerning the avoidance of unwanted tripping.

NOTE 2 – The requirements of 411.3.3L do not apply to FELV systems according to 411.7 or reduced low voltage systems according to 411.8.

NOTE 3 – Socket-outlets not protected by RCD e.g. for fire alarms, battery chargers and medical equipment shall be labeled with words in white against a red background as shown.



NOTE 4 – Socket-outlet circuit used for electric vehicle charging shall comply with 1.7.6 of TR 25.

411.4L TN-S system

411.4.1L In a TN-S system, the integrity of the earthing of the installation depends on the reliable and effective connection of the PE conductors to earth. Where the earthing is provided from a public or other supply system, compliance with the necessary conditions external to the installation is the responsibility of the supplier.

411.4.2L The neutral point or the midpoint of the power supply system shall be earthed.

Each exposed-conductive-part of the installation shall be connected by a protective conductor to the main earthing terminal of the installation, which shall be connected to the earthed point of the power supply system.

NOTE – The PE conductors may additionally be connected to Earth, such as at the point of entry into the building.

411.4.3L Reserved for future use

411.4.4L One or more of the following types of protective device shall be used for fault protection:

(i) An overcurrent protective device

(ii) An RCD.

NOTE 1 – Where an RCD is used for fault protection the circuit should also incorporate an overcurrent protective device in accordance with Chapter 43.

NOTE 2 – Where discrimination between RCDs is necessary, see 531.2.

411.4.5L The characteristics of the protective devices (see 411.4.4L) and the circuit impedances shall fulfil the following requirement:

$$Z_s \times I_a \leq U_0 \quad \text{or} \quad Z_s \times I_{\Delta n} \leq 50\ V$$

where:

Z_s is the impedance in ohms (Ω) of the fault loop comprising:
- the source
- the line conductor up to the point of the fault, and
- the protective conductor between the point of the fault and the source.

COPYRIGHT

I_a is the current in amperes (A) causing the automatic operation of the disconnecting device within the time specified in Table 41.1 of 411.3.2.2L or, as appropriate, 411.3.2.3L. Where an RCD is used this current is the rated residual operating current providing disconnection in the time specified in Table 41.1 or 411.3.2.3L.

$I_{\Delta n}$ is the rated residual operating current of the RCD.

U_0 is the nominal a.c. rms or d.c. line voltage to earth in volts (V).

NOTE – Where compliance with this clause is provided by an RCD, the disconnection times in accordance with Table 41.1 relate to prospective residual fault currents significantly higher than the rated residual operating current of the RCD.

411.4.6 Where a fuse is used to satisfy the requirements of 411.3.2.2L, maximum values of earth fault loop impedance (Z_s) corresponding to a disconnection time of 0.4 s are stated in Table 41.2 for a nominal voltage (U_0) of 230 V. For types and rated currents of general purpose (gG) and motor circuit application (gM) fuses other than those mentioned in Table 41.2, reference should be made to the appropriate standard to determine the value of I_a for compliance with 411.4.5L.

Table 41.2 – Maximum earth fault loop impedance (Z_s) for fuses, for 0.4 s disconnection time with U_0 of 230 V (see 411.4.6)

(a) General purpose (gG) and motor circuit application (gM) fuses to IEC 60269-2 – fuse systems E (bolted) and G (clip in)						
Rating (amperes)	6	10	16	20	25	32
Z_s (ohms)	8.21	4.89	2.56	1.77	1.35	1.04
(b) Fuses to IEC 60269-3 fuse system C						
Rating (amperes)	5	16	20	32		
Z_s (ohms)	10.45	2.42	2.04	0.96		
(c) Fuses to BS 3036					(d) Fuses to SS 167	
Rating (amperes)	5	15	20	30	Rating (amperes)	3	13
Z_s (ohms)	9.58	2.55	1.77	1.09	Z_s (ohms)	16.4	2.42

NOTE – The circuit loop impedances given in the table should not be exceeded when the conductors are at their normal operating temperature. If the conductors are at a different temperature when tested, the reading should be adjusted accordingly. See Appendix 14(L).

411.4.7L Where a circuit-breaker is used to satisfy the requirements of 411.3.2.2L or 411.3.2.3L, the maximum value of earth fault loop impedance (Z_s) shall be determined by the formula in 411.4.5L. Alternatively, for a nominal voltage (U_o) of 230 V and a disconnection time of 0.4 s in accordance with 411.3.2.2L or 5 s in accordance with 411.3.2.3L, the values specified in Table 41.3 for the types and ratings of overcurrent devices listed may be used instead of calculation.

COPYRIGHT

Table 41.3L – Maximum earth fault loop impedance (Z_s) for circuit-breakers with U_0 of 230 V, for instantaneous operation giving compliance with the 0.4 s disconnection time of 411.3.2.2L and 5 s disconnection time of 411.3.2.3L (for RCBOs see also 411.4.9L)

(a) Type B circuit-breakers to IEC 60898-1														
Rating (amperes)	3	6	10	16	20	25	32	40	50	63	80	100	125	I_n
Z_s (ohms)	15.33	7.67	4.60	2.87	2.30	1.84	1.44	1.15	0.92	0.73	0.57	0.46	0.37	$46/I_n$
(b) Type C circuit-breakers to IEC 60898-1														
Rating (amperes)		6	10	16	20	25	32	40	50	63	80	100	125	I_n
Z_s (ohms)		3.83	2.30	1.44	1.15	0.92	0.72	0.57	0.46	0.36	0.29	0.23	0.18	$23/I_n$
(c) Type D circuit-breakers to IEC 60898-1														
Rating (amperes)		6	10	16	20	25	32	40	50	63	80	100	125	In
Z_s (ohms)		1.92	1.15	0.72	0.57	0.46	0.36	0.29	0.23	0.18	0.14	0.11	0.09	$11.5/I_n$

NOTE – The circuit loop impedances given in the table should not be exceeded when the conductors are at their normal operating temperature. If the conductors are at a different temperature when tested, the reading should be adjusted accordingly. See Appendix 14(L).

411.4.8L Where a fuse is used for a distribution circuit or a final circuit in accordance with 411.3.2.3L, maximum values of earth fault loop impedance (Z_s) corresponding to a disconnection time of 5 s are stated in Table 41.4 for a nominal voltage (U_0) of 230 V. For types and rated currents of general purpose (gG) and motor circuit application (gM) fuses other than those mentioned in Table 41.4, reference should be made to the appropriate standard to determine the value of Ia for compliance with 411.4.5L.

COPYRIGHT

Table 41.4 – Maximum earth fault loop impedance (Z_s) for fuses, for 5 s disconnection time with U_0 of 230 V (see 411.4.8)

(a) General purpose (gG) and motor circuit application (gM) fuses to IEC 60269-2 – fuse systems E (bolted) and G (clip in)								
Rating (amperes)	6	10	16	20	25	32	40	50
Z_s (ohms)	12.8	7.19	4.18	2.95	2.30	1.84	1.35	1.04
Rating (amperes)	63	80	100	125	160	200		
Z_s (ohms)	0.82	0.57	0.46	0.34	0.28	0.19		
(b) Fuses to IEC 60269-3 fuse system C								
Rating (amperes)	5	16	20	32	45	63	80	100
Zs (ohms)	15.33	4.11	3.38	1.64	1.04	0.72	0.53	0.40
(c) Fuses to BS 3036								
Rating (amperes)	5	15	20	30	45	60	100	
Z_s (ohms)	17.7	5.35	3.83	2.64	1.59	1.12	0.53	
(d) Fuses to SS 167								
Rating (amperes)	3	13						
Z_s (ohms)	23.2	3.83						

NOTE – The circuit loop impedances given in the table should not be exceeded when the conductors are at their normal operating temperature. If the conductors are at a different temperature when tested, the reading should be adjusted accordingly. See Appendix 14(L).

411.4.9L Where an RCCB and RCBO are used to satisfy the requirements of 411.3.2.2L, the maximum values of earth fault loop impedance in Table 41.5 may be applied for non-delayed RCCBs and RCBOs to SS 97 and SS 480, respectively for a nominal voltage Uo of 230 V. In such cases, an overcurrent protective device shall provide protection against overload current and fault current in accordance with Chapter 43.

411.5 TT system

411.5.1 Every exposed-conductive-part which is to be protected by a single protective device shall be connected, via the main earthing terminal, to a common earth electrode. However, if two or more protective devices are in series, the exposed-conductive-parts may be connected to separate earth electrodes corresponding to each protective device.

411.5.2 One or more of the following types of protective device shall be used, the former being preferred:

(i) An RCD

(ii) An overcurrent protective device.

NOTE 1 – An appropriate overcurrent protective device may be used for fault protection provided a suitably low value of Z_s is permanently and reliably assured.

NOTE 2 – Where an RCD is used for fault protection the circuit should also incorporate an overcurrent protective device in accordance with Chapter 43.

COPYRIGHT

411.5.3L Where an RCD is used for fault protection, the following conditions shall be fulfilled:

(i) The disconnection time shall be that required by 411.3.2.2L or 411.3.2.4L, and

(ii) $R_a \times I_{\Delta n} \leq 50$ V

where:

R_a is the sum of the resistances of the earth electrode and the protective conductor connecting it to the exposed- conductive-parts (in ohms).

$I_{\Delta n}$ is the rated residual operating current of the RCD.

The requirements of this clause are met if the earth fault loop impedance of the circuit protected by the RCD meets the requirements of Table 41.5.

NOTE 1 – Where discrimination between RCDs is necessary refer also to 531.2.9L.

NOTE 2 – Where R_a is not known, it may be replaced by Z_s.

Table 41.5 – Maximum earth fault loop impedance (Z_s) for non-delayed RCDs to SS 97 and SS 480 for U_o of 230 V (see 411.5.3L)

Rated residual operating current (mA)	Maximum earth fault loop impedance Z_s (ohms)
30	1667*
100	500*
300	167
500	100

NOTE 1 – Figures for Z_s result from the application of 411.5.3L(i) and 411.5.3L(ii). Disconnection should be ensured within the times stated in Table 41.1.

NOTE 2 – * The resistance of the installation earth electrode should be as low as practicable. A value exceeding 200 ohms may not be stable. Refer to 542.2.4.

411.5.4L Where an overcurrent protective device is used the following condition shall be fulfilled:

$$R_a \times I_a \leq 50 \text{ V}$$

where:

R_a is the sum of the resistances of the earth electrode and the protective conductor connecting it to the exposed- conductive-parts (in ohms).

I_a is the current in amperes (A) causing the automatic operation of the disconnecting device within the time specified in Table 41.1 of 411.3.2.2L or, as appropriate, 411.3.2.4L.

411.6L Reserved for future use

411.7 Functional Extra-Low Voltage (FELV)

411.7.1L General

Where, for functional reasons, a nominal voltage not exceeding 50 V a.c. or 120 V d.c. is used but all the requirements of Section 414 relating to SELV or to PELV are not fulfilled, and where SELV or

COPYRIGHT

PELV is not necessary, the supplementary provisions described in 411.7.2L and 411.7.3 shall be applied to ensure basic protection and fault protection.

This combination of provisions is known as FELV.

NOTE – Such conditions may, for example, be encountered where the circuit contains equipment (such as transformers, relays, remote-control switches, contactors) which is insufficiently insulated with respect to circuits at higher voltage.

411.7.2L Requirements for basic protection

Basic protection shall be provided by either:

(i) basic insulation according to 416.1 corresponding to the nominal voltage of the primary circuit of the source, or

(ii) barriers or enclosures in accordance with 416.2.

411.7.3 Requirements for fault protection

The exposed-conductive-parts of the equipment of the FELV circuit shall be connected to the protective conductor of the primary circuit of the source, provided that the primary circuit is subject to protection by automatic disconnection of supply in accordance with 411.3 to 411.6L.

411.7.4L Sources

The source of the FELV system shall either be a transformer with at least simple separation between windings or shall comply with 414.3L.

If an extra-low voltage system is supplied from a higher voltage system by equipment which does not provide at least simple separation between that system and the extra-low voltage system, such as an autotransformer, a potentiometer or a semiconductor device, the output circuit is not part of a FELV system and is deemed to be an extension of the input circuit and shall be protected by the protective measure applied to the input circuit.

NOTE – This does not preclude connecting a conductor of the FELV circuit to the protective conductor of the primary circuit.

411.7.5 Plugs, socket-outlets, LSCs, DCLs and cable couplers

Every plug, socket-outlet, luminaire supporting coupler (LSC), device for connecting a luminaire (DCL) and cable coupler in a FELV system shall have a protective conductor contact and shall not be dimensionally compatible with those used for any other system in use in the same premises.

411.8 Reduced low voltage systems

411.8.1 General

411.8.1.1L Where, for functional reasons, the use of extra-low voltage is impracticable and there is no requirement for the use of SELV or PELV, a reduced low voltage system may be used, for which the provisions described in 411.8.2 to 411.8.5 shall be made to ensure basic protection and fault protection.

411.8.1.2 The nominal voltage of the reduced low voltage circuits shall not exceed 110 V a.c. rms between lines (three-phase 63.5 V to earthed neutral, single-phase 55 V to earthed midpoint).

COPYRIGHT

411.8.2 Requirements for basic protection

Basic protection shall be provided by either:

(i) basic insulation according to 416.1 corresponding to the maximum nominal voltage of the reduced low voltage system given in 411.8.1.2, or

(ii) barriers or enclosures in accordance with 416.2.

411.8.3L Requirements for fault protection

Fault protection by automatic disconnection of supply shall be provided by means of an overcurrent protective device in each line conductor or by an RCD, and all exposed-conductive-parts of the reduced low voltage system shall be connected to Earth. The earth fault loop impedance at every point of utilisation, including socket-outlets, shall be such that the disconnection time does not exceed 5 s.

Where a circuit-breaker is used, the maximum value of earth fault loop impedance (Z_s) shall be determined by the formula in 411.4.5L. Alternatively, the values specified in Table 41.6L may be used instead of calculation for the nominal voltages (U_0) and the types and ratings of overcurrent device listed therein.

Where a fuse is used, the maximum values of earth fault loop impedance (Z_s) corresponding to a disconnection time of 5 s are stated in Table 41.6L for nominal voltages (U_0) of 55 V and 63.5 V.

For types and rated currents of fuses other than those mentioned in Table 41.6L, reference should be made to the appropriate standard to determine the value of I_a for compliance with 411.4.5L, according to the appropriate value of the nominal voltage (U_0).

Where fault protection is provided by an RCD, the product of the rated residual operating current ($I_{\Delta n}$) in amperes and the earth fault loop impedance in ohms shall not exceed 50.

COPYRIGHT

Table 41.6L – Maximum earth fault loop impedance (Z_s) for 5 s disconnection time and U_0 of 55 V (single-phase) and 63.5 V (three-phase) (see 411.8.1.2 and 411.8.3L)

	Circuit-breakers to IEC 60898-1 Type						General purpose (gG) fuses to IEC 60269-2 – fuse systems E and G	
	B		C		D			
U_0 (volts)	55	63.5	55	63.5	55	63.5	55	63.5
Rating amperes	Z_s ohms							
6	1.83	2.12	0.92	1.07	0.47	0.53	3.06	3.53
10	1.10	1.27	0.55	0.64	0.28	0.32	1.72	1.98
16	0.69	0.79	0.34	0.40	0.18	0.20	1.00	1.15
20	0.55	0.64	0.28	0.32	0.14	0.16	0.71	0.81
25	0.44	0.51	0.22	0.26	0.11	0.13	0.55	0.64
32	0.34	0.40	0.17	0.20	0.09	0.10	0.44	0.51
40	0.28	0.32	0.14	0.16	0.07	0.08	0.32	0.37
50	0.22	0.25	0.11	0.13	0.06	0.06	0.25	0.29
63	0.17	0.20	0.09	0.10	0.04	0.05	0.20	0.23
80	0.14	0.16	0.07	0.08	0.04	0.04	0.14	0.16
100	0.11	0.13	0.05	0.06	0.03	0.03	0.11	0.12
125	0.09	0.10	0.04	0.05	0.02	0.03	0.08	0.09
I_n	$\frac{11}{I_n}$	$\frac{12.7}{I_n}$	$\frac{5.5}{I_n}$	$\frac{6.4}{I_n}$	$\frac{2.8}{I_n}$	$\frac{3.2}{I_n}$		

NOTE – The circuit loop impedances given in the table should not be exceeded when the conductors are at their normal operating temperature. If the conductors are at a different temperature when tested, the reading should be adjusted accordingly. See Appendix 14(L).

411.8.4 Sources

411.8.4.1L The source of supply to a reduced low voltage circuit shall be one of the following:

(i) A double-wound isolating transformer complying with IEC 61558-1 and IEC 61558-2-23

(ii) A motor-generator having windings providing isolation equivalent to that provided by the windings of an isolating transformer

(iii) A source independent of other supplies, e.g. an engine driven generator.

411.8.4.2 The neutral (star) point of the secondary windings of three-phase transformers and generators, or the midpoint of the secondary windings of single-phase transformers and generators, shall be connected to Earth.

411.8.5 Requirements for circuits

Every plug, socket-outlet, luminaire supporting coupler (LSC), device for connecting a luminaire (DCL) and cable coupler of a reduced low voltage system shall have a protective conductor contact and shall not be dimensionally compatible with those used for any other system in use in the same premises.

COPYRIGHT

412 Protective measure double or reinforced insulation

412.1 General

412.1.1 Double or reinforced insulation is a protective measure in which:

(i) basic protection is provided by basic insulation and fault protection is provided by supplementary insulation, or

(ii) basic and fault protection are provided by reinforced insulation between live parts and accessible parts.

NOTE – This protective measure is intended to prevent the appearance of a dangerous voltage on the accessible parts of electrical equipment through a fault in the basic insulation.

412.1.2 The protective measure of double or reinforced insulation is applicable in all situations, unless limitations are given in the corresponding sections of Part 7.

412.1.3 Where this protective measure is to be used as the sole protective measure (i.e. where a whole installation or circuit is intended to consist entirely of equipment with double insulation or reinforced insulation), it shall be verified that the installation or circuit concerned will be under effective supervision in normal use so that no change is made that would impair the effectiveness of the protective measure. This protective measure shall not therefore be applied to any circuit that includes a socket-outlet, luminaire supporting coupler (LSC), device for connecting a luminaire (DCL) or cable coupler, or where a user may change items of equipment without authorisation.

412.2 Requirements for basic protection and fault protection

412.2.1L Electrical equipment

Where the protective measure of double or reinforced insulation is used for the complete installation or part of the installation, electrical equipment shall comply with one of the following:

(i) 412.2.1.1, or

(ii) 412.2.1.2 and 412.2.2, or

(iii) 412.2.1.3 and 412.2.2.

412.2.1.1 Electrical equipment shall be of the following types, type-tested and marked to the relevant standards:

(i) Electrical equipment having double or reinforced insulation (Class II equipment)

(ii) Electrical equipment declared in the relevant product standard as equivalent to Class II, such as assemblies of electrical equipment having total insulation (see IEC 61439 series).

NOTE – This equipment is identified by the symbol  Refer to IEC 60417: Class II equipment.

412.2.1.2 Electrical equipment having basic insulation only shall have supplementary insulation applied in the process of erecting the electrical installation, providing a degree of safety equivalent to electrical equipment according to 412.2.1.1 and complying with 412.2.2.1 to 412.2.2.3.

The symbol  shall be fixed in a visible position both on the exterior and interior of the enclosure.

COPYRIGHT

412.2.1.3 Electrical equipment having uninsulated live parts shall have reinforced insulation applied in the process of erecting the electrical installation, providing a degree of safety equivalent to electrical equipment according to 412.2.1.1 and complying with 412.2.2.2 and 412.2.2.3, such insulation being recognised only where constructional features prevent the application of double insulation.

The symbol  shall be fixed in a visible position both on the exterior and interior of the enclosure.

412.2.2 Enclosures

412.2.2.1 The electrical equipment being ready for operation, all conductive parts separated from live parts by basic insulation only shall be contained in an insulating enclosure affording at least the degree of protection IPXXB or IP2X.

412.2.2.2 The following requirements apply as specified:

(i) The insulating enclosure shall not be traversed by conductive parts likely to transmit a potential, and

(ii) the insulating enclosure shall not contain any screws or other fixing means which might need to be removed, or are likely to be removed during installation and maintenance and whose replacement by metallic screws or other fixing means could impair the enclosure's insulation.

Where the insulating enclosure shall be traversed by mechanical joints or connections (e.g. for operating handles of built-in equipment), these should be arranged in such a way that protection against shock in case of a fault is not impaired.

412.2.2.3 Where a lid or door in an insulating enclosure can be opened without the use of a tool or key, all conductive parts which are accessible if the lid or door is open shall be behind an insulating barrier (providing a degree of protection not less than IPXXB or IP2X) preventing persons from coming unintentionally into contact with those conductive parts. This insulating barrier shall be removable only by the use of a tool or key.

412.2.2.4 No conductive part enclosed in the insulating enclosure shall be connected to a protective conductor. However, provision may be made for connecting protective conductors which necessarily run through the enclosure in order to serve other items of electrical equipment whose supply circuit also runs through the enclosure. Inside the enclosure, any such conductors and their terminals shall be insulated as though they were live parts, and their terminals shall be marked as protective conductor (PE) terminals.

No exposed-conductive-part or intermediate part shall be connected to any protective conductor unless specific provision for this is made in the specification for the equipment concerned.

412.2.2.5 The enclosure shall not adversely affect the operation of the equipment protected in this way.

412.2.3 Installation

412.2.3.1L The installation of equipment mentioned in 412.2.1L (fixing, connection of conductors, etc.) shall be effected in such a way as not to impair the protection afforded in compliance with the equipment specification.

412.2.3.2L Except where 412.1.3 applies, a circuit supplying one or more items of Class II equipment shall have a circuit protective conductor run to and terminated at each point in wiring and at each accessory.

NOTE – This requirement is intended to take account of the possible replacement by the user of Class II equipment by Class I equipment.

COPYRIGHT

412.2.4 Wiring systems

412.2.4.1 Wiring systems installed in accordance with Chapter 52 are considered to meet the requirements of 412.2 if:

(i) the rated voltage of the cable(s) is not less than the nominal voltage of the system and at least 300/500 V, and

(ii) dequate mechanical protection of the basic insulation is provided by one or more of the following:

(a) The non-metallic sheath of the cable

(b) Non-metallic trunking or ducting complying with the IEC 61084 series of standards, or non- metallic conduit complying with the IEC 61386 series of standards.

NOTE 1 – Cable product standards do not specify impulse withstand capability. However, it is considered that the insulation of the cabling system is at least equivalent to the requirement in IEC 61140 for reinforced insulation.

NOTE 2 – A wiring system should not be identified by the symbol ⧈ or by the symbol ⊗.

413 Protective measure electrical separation

413.1 General

413.1.1 Electrical separation is a protective measure in which:

(i) basic protection is provided by basic insulation of live parts or by barriers or enclosures in accordance with Section 416, and

(ii) fault protection is provided by simple separation of the separated circuit from other circuits and from Earth.

413.1.2L Except as permitted by 413.1.3L, this protective measure shall be limited to the supply of one item of current-using equipment supplied from one unearthed source with simple separation.

NOTE – Where this protective measure is used, it is particularly important to ensure compliance of the basic insulation with the product standard.

413.1.3L Where more than one item of current-using equipment is supplied from an unearthed source with simple separation, the requirements of 418.3L shall be met.

413.2 Requirements for basic protection

All electrical equipment shall be subject to one of the basic protective provisions in Section 416 or to the protective measures in Section 412.

413.3 Requirements for fault protection

413.3.1L Protection by electrical separation shall be ensured by compliance with 413.3.2 to 413.3.6.

COPYRIGHT

413.3.2L The source of supply shall comply with the following requirements:

(i) it shall be either:

(a) An isolating transformer complying with IEC 61558-1, in which there shall be no connection between the output winding and the body or the protective earthing circuit if any, or

(b) A source of current such as a motor generator with windings providing a degree of safety equivalent to that of the safety isolating transformer referred to above.

(ii) a mobile source of supply fed from a fixed installation shall be selected or installed in accordance with Section 412 (protected by use of Class II equipment or by equivalent insulation).

(iii) equipment used as a fixed source of supply shall be either:

(a) selected and installed in accordance with Section 412, or

(b) such that the output is separated from the input and from the enclosure by insulation satisfying the conditions of Section 412. If such a source supplies several items of equipment, exposed-conductive-parts of that equipment shall not be connected to the exposed-conductive-parts of the source.

(iv) the voltage of the electrically separated circuit shall not exceed 500V.

413.3.3 Live parts of the separated circuit shall not be connected at any point to another circuit or to Earth or to a protective conductor.

To ensure electrical separation, arrangements shall be such that basic insulation is achieved between circuits in compliance with 416.1.

413.3.4 Flexible cables shall be visible throughout any part of their length liable to mechanical damage.

413.3.5 For separated circuits the use of separate wiring systems is recommended. If separated circuits and other circuits are in the same wiring system, multi-conductor cables without metallic covering or insulated conductors in insulating conduit, non-metallic ducting or non-metallic trunking shall be used, provided that:

(i) the rated voltage is not less than the highest nominal voltage, and

(ii) each circuit is protected against overcurrent.

413.3.6 No exposed-conductive-part of the separated circuit shall be connected either to the protective conductor or exposed-conductive-parts of other circuits, or to Earth.

NOTE – If the exposed-conductive-parts of the separated circuit are liable to come into contact, either intentionally or fortuitously, with the exposed-conductive-parts of other circuits, protection against electric shock no longer depends solely on protection by electrical separation but also on the protective provisions to which the latter exposed-conductive-parts are subject.

COPYRIGHT

414 Protective measure extra low voltage provided by SELV or PELV

414.1 General

414.1.1 Protection by extra-low voltage is a protective measure which consists of either of two different extra-low voltage systems:

(i) SELV, or

(ii) PELV.

Protection by extra-low voltage provided by SELV or PELV requires:

(iii) limitation of voltage in the SELV or PELV system to the upper limit of voltage Band I, 50 V a.c. or 120 V d.c. (see IEC 61140), and

(iv) protective separation of the SELV or PELV system from all circuits other than SELV and PELV circuits, and basic insulation between the SELV or PELV system and other SELV or PELV systems, and

(v) for SELV systems only, basic insulation between the SELV system and Earth.

414.1.2 The use of SELV or PELV according to Section 414 is considered as a protective measure in all situations.

NOTE – In certain locations the requirements of Part 7 limit the value of the extra-low voltage to a value lower than 50 V a.c. or 120 V d.c.

414.2L Requirements for basic protection and fault protection

Basic protection and fault protection is deemed to be provided where:

(i) the nominal voltage cannot exceed the upper limit of voltage Band I, and

(ii) the supply is from one of the sources listed in 414.3L, and

(iii) the conditions of 414.4 are fulfilled.

NOTE 1 – If the system is supplied from a higher voltage system by equipment which provides at least simple separation between that system and the extra-low voltage system but which does not meet the requirements for SELV and PELV sources in 414.3L, the requirements for FELV may be applicable, see 411.7.

NOTE 2 – d.c. voltages for ELV circuits generated by a semiconductor convertor (see IEC 60146-2) require an internal a.c. voltage circuit to supply the rectifier stack. This internal a.c. voltage exceeds the d.c. voltage. The internal a.c. circuit is not to be considered as a higher voltage circuit within the meaning of this clause. Between internal circuits and external higher voltage circuits, protective separation is required.

NOTE 3 – In d.c. systems with batteries, the battery charging and floating voltages exceed the battery nominal voltage, depending on the type of battery. This does not require any protective provisions in addition to those specified in this clause. The charging voltage should not exceed a maximum value of 75 V a.c. or 150 V d.c. as appropriate according to the environmental situation as given in Table 1 of PD 6536 (IEC TS 61201).

414.3L Sources for SELV and PELV

The following sources may be used for SELV and PELV systems:

(i) A safety isolating transformer in accordance with IEC 61558-2-6

COPYRIGHT

(ii) A source of current providing a degree of safety equivalent to that of the safety isolating transformer specified in (i) (e.g. motor-generator with windings providing equivalent isolation)

(iii) An electrochemical source (e.g. a battery) or another source independent of a higher voltage circuit (e.g. a diesel-driven generator)

(iv) Certain electronic devices complying with appropriate standards, where provisions have been taken to ensure that, even in the case of an internal fault, the voltage at the outgoing terminals cannot exceed the values specified in 414.1.1. Higher voltages at the outgoing terminals are, however, permitted if it is ensured that, in case of contact with a live part or in the event of a fault between a live part and an exposed-conductive-part, the voltage at the output terminals is immediately reduced to the value specified in 414.1.1 or less.

NOTE 1 – Examples of such devices include insulation testing equipment and monitoring devices.

NOTE 2 – Where higher voltages exist at the outgoing terminals, compliance with this clause may be assumed if the voltage at the outgoing terminals is within the limits specified in 414.1.1 when measured with a voltmeter having an internal resistance of at least 3000 ohms.

A mobile source supplied at low voltage, e.g. a safety isolating transformer or a motor-generator, shall be selected and erected in accordance with the requirements for protection by the use of double or reinforced insulation (see Section 412).

414.4 Requirements for SELV and PELV circuits

414.4.1 SELV and PELV circuits shall have:

(i) basic insulation between live parts and other SELV or PELV circuits, and

(ii) protective separation from live parts of circuits not being SELV or PELV provided by double or reinforced insulation or by basic insulation and protective screening for the highest voltage present.

SELV circuits shall have basic insulation between live parts and Earth.

The PELV circuits and/or exposed-conductive-parts of equipment supplied by the PELV circuits may be earthed.

NOTE 1 – In particular, protective separation is necessary between the live parts of electrical equipment such as relays, contactors and auxiliary switches, and any part of a higher voltage circuit or a FELV circuit.

NOTE 2 – The earthing of PELV circuits may be achieved by a connection to Earth or to an earthed protective conductor within the source itself.

414.4.2L Protective separation of wiring systems of SELV or PELV circuits from the live parts of other circuits, which have at least basic insulation, shall be achieved by one of the following arrangements:

(i) SELV and PELV circuit conductors enclosed in a non-metallic sheath or insulating enclosure in addition to basic insulation

(ii) SELV and PELV circuit conductors separated from conductors of circuits at voltages higher than Band I by an earthed metallic sheath or earthed metallic screen

(iii) Circuit conductors at voltages higher than Band I may be contained in a multi-conductor cable or other grouping of conductors if the SELV and PELV conductors are insulated for the highest voltage present

(iv) The wiring systems of other circuits are in compliance with 412.2.4.1

(v) Physical separation.

COPYRIGHT

414.4.3 Every socket-outlet and luminaire supporting coupler in a SELV or PELV system shall require the use of a plug which is not dimensionally compatible with those used for any other system in use in the same premises.

Plugs and socket-outlets in a SELV system shall not have a protective conductor contact.

414.4.4 Exposed-conductive-parts of a SELV circuit shall not be connected to Earth, or to protective conductors or exposed-conductive-parts of another circuit.

NOTE – If the exposed-conductive-parts of SELV circuits are liable to come into contact, either fortuitously or intentionally, with the exposed-conductive-parts of other circuits, the requirements of the protective measure SELV have not been met and protection against electric shock no longer depends solely on protection by SELV, but also on the protective provisions to which the latter exposed-conductive-parts are subject.

414.4.5L If the nominal voltage exceeds 25 V a.c. or 60 V d.c., or if the equipment is immersed, basic protection shall be provided for SELV and PELV circuits by:

(i) insulation in accordance with 416.1 or

(ii) barriers or enclosures in accordance with 416.2.

Basic protection is generally unnecessary in normal dry conditions for:

(iii) SELV circuits where the nominal voltage does not exceed 25 V a.c. or 60 V d.c.

(iv) PELV circuits where the nominal voltage does not exceed 25 V a.c. or 60 V d.c. and exposed-conductive- parts and/or the live parts are connected by a protective conductor to the main earthing terminal.

In all other cases, basic protection is not required if the nominal voltage of the SELV or PELV system does not exceed 12 V a.c. or 30 V d.c.

415 Additional protection

NOTE – Additional protection in accordance with Section 415 may be specified with the protective measure. In particular, additional protection may be required with the protective measure under certain conditions of external influence and in certain special locations (see the corresponding sections of Part 7).

415.1 Additional protection: Residual current devices (RCDs)

415.1.1L The use of voltage independent type RCDs complying with SS 97 with a rated residual operating current ($I_{\Delta n}$) not exceeding 30 mA and an operating time not exceeding 40 ms at a residual current of 5 $I_{\Delta n}$ is recognised in a.c. systems as additional protection in the event of failure of the provision for basic protection and/or the provision for fault protection or carelessness by users.

NOTE – See 531.2.6 for the conditions permitting the use of voltage dependent type RCDs.

415.1.2 The use of RCDs is not recognised as a sole means of protection and does not obviate the need to apply one of the protective measures specified in Sections 411 to 414.

415.2 Additional protection: Supplementary equipotential bonding

NOTE 1 – Supplementary equipotential bonding is considered as an addition to fault protection.

NOTE 2 – The use of supplementary bonding does not exclude the need to disconnect the supply for other reasons, for example protection against fire, thermal stresses in equipment, etc.

COPYRIGHT

NOTE 3 – Supplementary bonding may involve the entire installation, a part of the installation, an item of equipment, or a location.

NOTE 4 – Additional requirements may be necessary for special locations (see the corresponding sections of Part 7), or for other reasons.

415.2.1 Supplementary equipotential bonding shall include all simultaneously accessible exposed-conductive-parts of fixed equipment and extraneous-conductive-parts including, where practicable, the main metallic reinforcement of constructional reinforced concrete. The equipotential bonding system shall be connected to the protective conductors of all equipment including those of socket-outlets.

415.2.2 Where doubt exists regarding the effectiveness of supplementary equipotential bonding, it shall be confirmed that the resistance R between simultaneously accessible exposed-conductive-parts and extraneous- conductive-parts fulfils the following condition:

$R \leq 50\ V/I_a$ in a.c. systems
$R \leq 120\ V/I_a$ in d.c. systems

where I_a is the operating current in amperes of the protective device –

for RCDs, $I_{\Delta n}$.
for overcurrent devices, the current causing automatic operation in 5 s.

416 Provisions for basic protection

NOTE – Provisions for basic protection provide protection under normal conditions and are applied where specified as a part of the chosen protective measure.

416.1 Basic insulation of live parts

Live parts shall be completely covered with insulation which can only be removed by destruction.

For equipment, the insulation shall comply with the relevant standard for such electrical equipment.

NOTE – The insulation is intended to prevent contact with live parts.

Paint, varnish, lacquer or similar products are generally not considered to provide adequate insulation for basic protection in normal service.

416.2 Barriers or enclosures

NOTE – Barriers or enclosures are intended to prevent contact with live parts.

416.2.1 Live parts shall be inside enclosures or behind barriers providing at least the degree of protection IPXXB or IP2X except that, where larger openings occur during the replacement of parts, such as certain lampholders or fuses, or where larger openings are necessary to allow the proper functioning of equipment according to the relevant requirements for the equipment:

(i) suitable precautions shall be taken to prevent persons or livestock from unintentionally touching live parts, and

(ii) it shall be ensured, as far as practicable, that persons will be aware that live parts can be touched through the opening and should not be touched intentionally, and

(iii) the opening shall be as small as is consistent with the requirement for proper functioning and for replacement of a part.

COPYRIGHT

416.2.2 A horizontal top surface of a barrier or enclosure which is readily accessible shall provide a degree of protection of at least IPXXD or IP4X.

416.2.3 A barrier or enclosure shall be firmly secured in place and have sufficient stability and durability to maintain the required degree of protection and appropriate separation from live parts in the known conditions of normal service, taking account of relevant external influences.

416.2.4L Where it is necessary to remove a barrier or open an enclosure or remove parts of enclosures, this shall be possible only:

(i) by the use of a key or tool, or

(ii) after disconnection of the supply to live parts against which the barriers or enclosures afford protection, restoration of the supply being possible only after replacement or reclosure of the barrier or enclosure, or

(iii) where an intermediate barrier providing a degree of protection of at least IPXXB or IP2X prevents contact with live parts, by the use of a key or tool to remove the intermediate barrier.

NOTE – This clause does not apply to:

- a ceiling rose complying with BS 67
- a cord operated switch complying with IEC 60669-1
- a bayonet lampholder complying with IEC 61184
- an Edison screw lampholder complying with IEC 60238.

416.2.5 If, behind a barrier or in an enclosure, an item of equipment such as a capacitor is installed which may retain a dangerous electrical charge after it has been switched off, a warning label shall be provided. Small capacitors such as those used for arc extinction and for delaying the response of relays, etc shall not be considered dangerous.

NOTE – Unintentional contact is not considered dangerous if the voltage resulting from static charge falls below 120 V d.c. in less than 5 s after disconnection from the power supply.

417 Obstacles and placing out of reach

417.1L Application

The protective measures of obstacles and placing out of reach provide basic protection only. They are for application in installations, with or without fault protection, that are controlled or supervised by skilled persons.

The conditions of supervision under which the basic protective provisions of Section 417 may be applied as part of the protective measure are given in 410.3.5.

417.2 Obstacles

NOTE – Obstacles are intended to prevent unintentional contact with live parts but not intentional contact by deliberate circumvention of the obstacle.

417.2.1 Obstacles shall prevent:

(i) unintentional bodily approach to live parts, and

(ii) unintentional contact with live parts during the operation of live equipment in normal service.

417.2.2 An obstacle may be removed without the use of a key or tool but shall be secured so as to prevent unintentional removal.

COPYRIGHT

417.3L Placing out of reach

Overhead lines for distribution between buildings and structures shall be fully insulated and supported at suitable intervals and where necessary suspended by catenary wires at a height not less than 5 metres from the ground, at vehicular crossings.

417.3.1 Simultaneously accessible parts at different potentials shall not be within arm's reach.

A bare live part other than an overhead line shall not be within arm's reach or within 2.5 m of the following:

(i) An exposed-conductive-part

(ii) An extraneous-conductive-part

(iii) A bare live part of any other circuit.

NOTE – Two parts are deemed to be simultaneously accessible if they are not more than 2.50 m apart (see Figure 417).

417.3.2 If a normally occupied position is restricted in the horizontal direction by an obstacle (e.g. handrail, mesh screen) affording a degree of protection less than IPXXB or IP2X, arm's reach shall extend from that obstacle. In the overhead direction, arm's reach is 2.50 m from the surface, S, not taking into account any intermediate obstacle providing a degree of protection less than IPXXB.

NOTE – The values of arm's reach apply to contact directly with bare hands without assistance (e.g. tools or ladder).

Figure 417 – Arm's reach

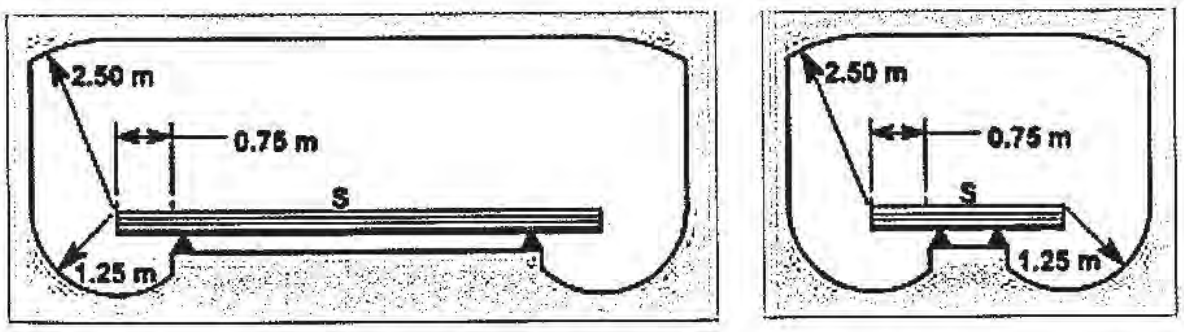

S = surface expected to be occupied by persons

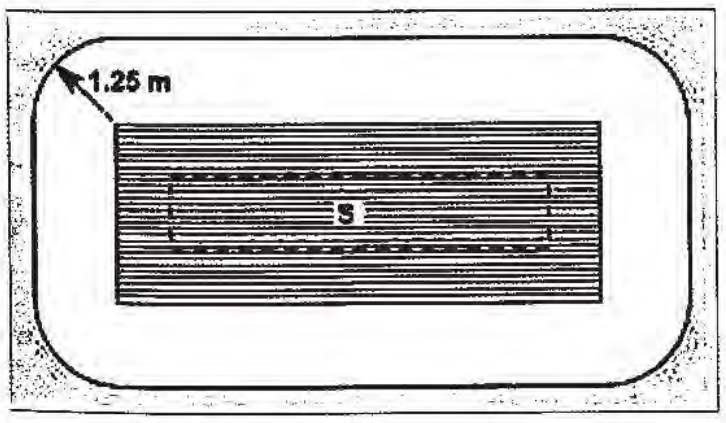



limit of arm's reach

The values refer to bare hands without any assistance, e.g. from tools or a ladder.

417.3.3L In places where bulky or long conductive objects are normally handled, the distances required by 417.3.1 and 417.3.2 shall be increased, taking account of the relevant dimensions of those objects.

COPYRIGHT

418L Protective measures for application only where the installation is controlled

418.1 Non-conducting location

This method of protection is not recognised for general application. The design and installation of such measures shall be under the purview of a specialist.

This protective measure is intended to prevent simultaneous contact with parts which may be at different potentials through failure of the basic insulation of live parts.

418.1.1 All electrical equipment shall comply with one of the provisions for basic protection described in Section 416.

418.1.2 Exposed-conductive-parts shall be arranged so that under ordinary circumstances persons will not come into simultaneous contact with:

(i) two exposed-conductive-parts, or

(ii) an exposed-conductive-part and any extraneous-conductive-part

if these parts are liable to be at different potentials through failure of the basic insulation of a live part.

418.1.3 In a non-conducting location there shall be no protective conductor.

418.1.4 418.1.2 is fulfilled if the location has an insulating floor and walls and one or more of the following arrangements applies:

(i) Relative spacing of exposed-conductive-parts and of extraneous-conductive-parts as well as spacing of exposed-conductive-parts

This spacing is sufficient if the distance between two parts is not less than 2.5 m; this distance may be reduced to 1.25 m outside the zone of arm's reach.

(ii) Interposition of effective obstacles between exposed-conductive-parts and extraneous-conductive-parts

Such obstacles are sufficiently effective if they extend the distances to be surmounted to the values stated in point (i) above. They shall not be connected to earth or to exposed-conductive-parts; as far as possible they shall be of insulating material.

(iii) Insulation or insulating arrangements of extraneous-conductive-parts.

The insulation shall be of sufficient mechanical strength and be able to withstand a test voltage of at least 2000 V. Leakage current shall not exceed 1 mA in normal conditions of use.

418.1.5 The resistance of insulating floors and walls at every point of measurement under the conditions specified in Part 6 shall be not less than:

(i) 50 kΩ, where the nominal voltage of the installation does not exceed 500 V, or

(ii) 100 kΩ, where the nominal voltage of the installation exceeds 500 V.

NOTE – If at any point the resistance is less than the specified value, the floors and walls are deemed to be extraneous- conductive-parts for the purposes of protection against electric shock.

COPYRIGHT

418.1.6L The arrangements made shall be permanent and it shall not be possible to make them ineffective. The arrangements shall also ensure protection where the use of mobile equipment is envisaged.

NOTE 1 – Attention is drawn to the risk that, where electrical installations are not under effective supervision, further conductive parts may be introduced at a later date (e.g. mobile Class I equipment, or extraneous-conductive-parts such as metallic water pipes), which may invalidate compliance with 418.1.6L.

NOTE 2 – It is essential to ensure that the insulation of floor and walls cannot be affected by humidity.

418.1.7 Precautions shall be taken to ensure that extraneous-conductive-parts cannot cause a potential to appear external to the location concerned.

418.2 Protection by earth-free local equipotential bonding

This method of protection shall be used only in special circumstances.

NOTE – Earth-free local equipotential bonding is intended to prevent the appearance of a dangerous touch voltage.

418.2.1 All electrical equipment shall comply with one of the provisions for basic protection described in Section 416.

418.2.2 Protective bonding conductors shall interconnect every simultaneously accessible exposed-conductive-part and extraneous-conductive-part.

418.2.3 The local protective bonding conductors shall neither be in electrical contact with earth directly, nor through exposed-conductive-parts, nor through extraneous-conductive-parts.

NOTE – Where this requirement cannot be fulfilled, protection by automatic disconnection of supply is applicable (see Section 411).

418.2.4 Precautions shall be taken to ensure that persons entering the equipotential location cannot be exposed to a dangerous potential difference, in particular, where a conductive floor insulated from Earth is connected to the earth-free protective bonding conductors.

418.2.5L Where this measure is applied, a warning notice complying with 514.13.2L shall be fixed in a prominent position adjacent to every point of access to the location concerned.

418.3L Electrical separation for the supply to more than one item of current-using equipment

Where the measure is used to supply two or more items of equipment from a single source, a warning notice complying with 514.13.2L shall be fixed in a prominent position adjacent to every point of access to the location concerned.

NOTE – Electrical separation of an individual circuit is intended to prevent shock currents through contact with exposed- conductive-parts that may be energised by a fault in the basic insulation of the circuit.

418.3.1 All electrical equipment shall comply with one of the provisions for basic protection described in Section 416.

418.3.2L Protection by electrical separation for the supply to more than one item of equipment shall be ensured by compliance with all the requirements of Section 413 except 413.1.2L, and with the requirements in 418.3.3 to 418.3.8.

418.3.3 Precautions shall be taken to protect the separated circuit from damage and insulation failure.

COPYRIGHT

418.3.4 The exposed-conductive-parts of the separated circuit shall be connected together by insulated, non- earthed protective bonding conductors. Such conductors shall not be connected to the protective conductor or exposed-conductive-parts of any other circuit or to any extraneous-conductive-parts.

NOTE – See NOTE to 413.3.6.

418.3.5L Every socket-outlet shall be provided with a protective conductor contact which shall be connected to the equipotential bonding system provided in accordance with 418.3.4.

418.3.6L Except where supplying equipment with double or reinforced insulation, all flexible cables shall embody a protective conductor for use as a protective bonding conductor in accordance with 418.3.4.

418.3.7 It shall be ensured that if two faults affecting two exposed-conductive-parts occur and these are fed by conductors of different polarity, a protective device shall disconnect the supply in a disconnection time conforming with Table 41.1.

418.3.8 The product of the nominal voltage of the circuit in volts and length of the wiring system in metres shall not exceed 100,000 Vm, and the length of the wiring system shall not exceed 500 m.

CHAPTER 42

PROTECTION AGAINST THERMAL EFFECTS

420.1 Scope

This chapter applies to electrical installations and equipment with regard to measures for the protection of persons, livestock and property:

(i) against the harmful effects of heat or thermal radiation developed by electrical equipment

(ii) against the ignition, combustion or degradation of materials

(iii) against flames and smoke where a fire hazard could be propagated from an electrical installation to other nearby fire compartments, and

(iv) against safety services being cut off by the failure of electrical equipment.

NOTE 1 – For protection against thermal effects and fire, statutory requirements may be applicable. See Appendix 2(L).

NOTE 2L – Protection against overcurrent is dealt with in Chapter 43 of this Code.

420.2 Reserved for future use

420.3 Reserved for future use

421 Protection against fire caused by electrical equipment

421.1 General requirements

421.1.1L Persons, livestock and property shall be protected against harmful effects of heat or fire which may be generated or propagated in electrical installations.

COPYRIGHT

Manufacturers' instructions shall be taken into account in addition to the requirements of SS 638 : 2018.

NOTE 1 – Harmful effects of heat or fire may be caused by:

- heat accumulation, heat radiation, hot components or equipment
- failure of electrical equipment such as protective devices, switchgear, thermostats, temperature limiters, seals of cable penetrations and wiring systems
- overcurrent
- insulation faults or arcs, sparks and high temperature particles
- harmonic currents
- external influences such as lightning surge
- inappropriate selection or erection of equipment.

NOTE 2L – Lightning strikes and overvoltages are covered in the SS 555 series.

421.1.2 Fixed electrical equipment shall be selected and erected such that its temperature in normal operation will not cause a fire. This shall be achieved by the construction of the equipment or by additional protective measures taken during erection.

The heat generated by electrical equipment shall not cause danger or harmful effects to adjacent fixed material or to material which may foreseeably be in proximity to such equipment.

Where fixed equipment may attain surface temperatures which could cause a fire hazard to adjacent materials, one or more of the following installation methods shall be adopted. The equipment shall:

(i) be mounted on a support which has low thermal conductance or within an enclosure which will withstand, with minimal risk of fire or harmful thermal effect, such temperatures as may be generated, or

(ii) be screened by materials of low thermal conductance which can withstand, with minimal risk of fire or harmful thermal effect, the heat emitted by the electrical equipment, or

(iii) be mounted so as to allow safe dissipation of heat and at a sufficient distance from adjacent material on which such temperatures could have deleterious effects. Any means of support shall be of low thermal conductance.

421.1.3 Where arcs, sparks or particles at high temperature may be emitted by fixed equipment in normal service, the equipment shall meet one or more of the following requirements. It shall be:

(i) totally enclosed in arc-resistant material

(ii) screened by arc-resistant material from materials upon which the emissions could have harmful effects

(iii) mounted so as to allow safe extinction of the emissions at a sufficient distance from materials upon which the emissions could have harmful effects

(iv) in compliance with its standard.

Arc-resistant material used for this protective measure shall be non-ignitable, of low thermal conductivity and of adequate thickness to provide mechanical stability.

421.1.4 Fixed equipment causing a concentration and focusing of heat shall be at a sufficient distance from any fixed object or building element so that the object or element is not subjected to a dangerous temperature in normal conditions.

COPYRIGHT

421.1.5 Where electrical equipment in a single location contains flammable liquid in significant quantity, adequate precautions shall be taken to prevent the spread of liquid, flame and the products of combustion.

NOTE 1 – Examples of such precautions are:

(a) a retention pit to collect any leakage of liquid and ensure extinction in the event of fire

(b) installation of the equipment in a chamber of adequate fire-resistance and the provision of sills or other means of preventing burning liquid spreading to other parts of the building, such a chamber being ventilated solely to the external atmosphere.

NOTE 2 – The generally accepted lower limit for a significant quantity is 25 litres.

NOTE 3 – For quantities less than 25 litres, it is sufficient to take precautions to prevent the escape of liquid.

NOTE 4 – Products of combustion of liquid are considered to be smoke and gas.

421.1.6 Materials used for the construction of enclosures of electrical equipment shall comply with the resistance to heat and fire requirements in an appropriate product standard.

Where no product standard exists, the materials of an enclosure shall withstand the highest temperature likely to be produced by the electrical equipment in normal use.

421.7 Reserved for future use

422 Precautions where particular risks of fire exist

422.1L General

The requirements of this clause shall be applied in addition to those of Section 421 for installations in locations where any of the conditions of external influence described in 422.2 to 422.6L exist.

422.1.1L Except for wiring systems meeting the requirements of 422.3.5L, electrical equipment shall be restricted to that necessary to the use of the locations given in 422.1L.

422.1.2 Electrical equipment shall be so selected and erected that its normal temperature rise and foreseeable temperature rise during a fault cannot cause a fire. This shall be achieved by the construction of the equipment or by additional protective measures taken during erection.

Special measures are not necessary where the temperature of surfaces is unlikely to cause combustion of nearby substances.

422.1.3 A temperature cut-out device shall have manual reset only.

422.2 Conditions for evacuation in an emergency

The following regulations refer to conditions:

BD2: Low density occupation, difficult conditions of evacuation
BD3: High density occupation, easy conditions of evacuation
BD4: High density occupation, difficult conditions of evacuation

See Appendix 5(L).

NOTE(L) – Authorities responsible for building construction, public gatherings, fire prevention, hospitals, etc. may specify which BD condition is applicable.

COPYRIGHT

422.2.1L In conditions BD2, BD3 or BD4, wiring systems shall not encroach on escape routes unless the wiring in the wiring system is provided with sheaths or enclosures, provided by the cable management system itself or by other means.

Wiring systems encroaching on escape routes shall not be within arm's reach unless they are provided with protection against mechanical damage likely to occur during an evacuation.

Wiring systems in escape routes shall be as short as practicable.

Wiring systems shall be non-flame propagating. Compliance with this requirement is ensured through one or more of the following, as relevant:

(*i*) Cable shall meet the relevant part of the IEC 60332-3 series

(ii) Non-flame propagating conduit systems shall meet the requirements of IEC 61386

(iii) Non-flame propagating cable trunking systems and cable ducting systems shall meet the requirements of IEC 61084

(iv) Cable tray systems and cable ladder systems classified as non-flame propagating according to IEC 61537

In conditions BD2, BD3 or BD4, wiring systems that are supplying safety circuits shall have a resistance to fire rating of either the time authorised by regulations for building elements or one hour in the absence of such a regulation.

Wiring within escape routes shall have a limited rate of smoke production. Cables meeting a minimum of 60% light transmittance in accordance with IEC 61034-2 shall be selected.

422.2.2 In conditions BD2, BD3 or BD4, switchgear or controlgear shall be accessible only to authorised persons. If switchgear or controlgear is placed in an escape route, it shall be enclosed in a cabinet or an enclosure constructed of non-combustible or not readily combustible material.

These requirements do not apply to items of switchgear or controlgear installed to facilitate evacuation, such as fire alarm call points.

422.2.3 In escape routes where conditions BD3 or BD4 exist, the use of electrical equipment containing flammable liquids is not permitted.

This requirement does not apply to individual capacitors incorporated in equipment, such as a capacitor installed in a discharge luminaire or a motor starter.

422.3L Locations with risks of fire due to the nature of processed or stored materials

The requirements of this clause shall be applied in addition to those of Section 421 in locations where BE2 conditions exist.

This Code does not apply to selection and erection of installations in locations with explosion risks, see IEC 60079-14.

NOTE 1 – BE2 conditions exist where there is a risk of fire due to the manufacture, processing or storage of flammable materials including the presence of dust. See Appendix 5(L).

NOTE 2 – Examples of locations presenting BE2 conditions include barns (due to the accumulation of dust and fibres), woodworking facilities, paper mills and textile factories (due to the storage and processing of combustible materials).

NOTE 3 – Quantities of flammable materials or the surface or volume of the location may be regulated by the Authorities.

COPYRIGHT

422.3.1 Except for equipment for which an appropriate product standard specifies requirements, a luminaire shall be kept at an adequate distance from combustible materials. Unless otherwise recommended by the manufacturer, a small spotlight or projector shall be installed at the following minimum distance from combustible materials:

(i)	Rating up to 100 W	0.5 m
(ii)	Over100 and up to 300 W	0.8m
(iii)	Over 300 and up to 500 W	1.0m

Lamps and other components of luminaires shall be protected against foreseeable mechanical stresses. Such protective means shall not be fixed to lampholders unless they form an integral part of the luminaire or are fitted in accordance with the manufacturer's instructions.

A luminaire with a lamp that could eject flammable materials in case of failure shall be constructed with a safety protective shield for the lamp in accordance with the manufacturer's instructions.

422.3.2L Measures shall be taken to prevent an enclosure of electrical equipment such as a heater or resistor from exceeding the following temperatures:

(i) 90 °C under normal conditions, and

(ii) 115 °C under fault conditions.

Where materials such as dust or fibres sufficient to cause a fire hazard could accumulate on an enclosure of electrical equipment, adequate measures shall be taken to prevent an enclosure of electrical equipment from exceeding the temperatures stated above.

NOTE – Luminaires marked 

in compliance with IEC 60598-2-24 have limited surface temperature.

422.3.3L Switchgear or controlgear shall be installed outside the location unless:

(i) it is suitable for the location, or

(ii) it is installed in an enclosure providing a degree of protection of at least IP4X or, in the presence of dust, IP5X or, in the presence of electrically conductive dust, IP6X, except where 422.3.11 applies.

422.3.4L A cable shall, as a minimum, satisfy the test under fire conditions specified in IEC 60332-1-2.

A cable not completely embedded in non-combustible material such as plaster or concrete or otherwise protected from fire shall meet the flame propagation characteristics as specified in IEC 60332-1-2.

A conduit system shall satisfy the test under fire conditions specified in IEC 61386-1.

A cable trunking system or cable ducting system shall satisfy the test under fire conditions specified in IEC 61084.

A cable tray system or cable ladder shall satisfy the test under fire conditions specified in IEC 61537.

Precautions shall be taken such that the cable or wiring system cannot propagate flame.

Where the risk of flame propagation is high the cable shall meet the flame propagation characteristics specified in the appropriate part of the IEC 60332-3 series.

NOTE – The risk of flame propagation can be high where cables are bunched or installed in long vertical runs.

COPYRIGHT

422.3.5L A wiring system which passes through the location but is not intended to supply electrical equipment in the location shall:

(i) meet the requirements of 422.3.4L, and

(ii) have no connection or joint within the location, unless the connection or joint is installed within an enclosure that does not adversely affect the flame propagation characteristics of the wiring system, and

(iii) be protected against overcurrent in accordance with the requirements of 422.3.10, and

(iv) not employ bare live conductors.

422.3.6 Reserved for future use

422.3.7 A motor which is automatically or remotely controlled or which is not continuously supervised shall be protected against excessive temperature by a protective device with manual reset. A motor shall be protected against overtemperature in all operational modes.

422.3.8 Every luminaire shall:

(i) be appropriate for the location, and

(ii) be provided with an enclosure providing a degree of protection of at least IP4X or, in the presence of dust, IP5X or, in the presence of electrically conductive dust, IP6X, and

(iii) have a limited surface temperature in accordance with IEC 60598-2-24, and

(iv) be of a type that prevents lamp components from falling from the luminaire.

In locations where there may be fire hazards due to dust or fibres, luminaires shall be installed so that dust or fibres cannot accumulate in dangerous amounts.

422.3.9L Wiring systems, other than mineral insulated cables or busbar trunking systems shall be protected against insulation faults in a TN-S or TT system, by an RCD having a rated residual operating current ($I_{\Delta n}$) not exceeding 300 mA according with 531.2.4 and to relevant product standards. Where a resistive fault may cause a fire, e.g. for overhead heating with heating film elements, the rated residual operating current shall not exceed 30 mA.

422.3.10 Circuits supplying or traversing locations where BE2 conditions exist shall be protected against overload and against fault current by protective devices located outside and on the supply side of these locations. Circuits originating inside these locations shall be protected against overcurrent by protective devices located at their origin.

422.3.11 Regardless of the nominal voltage of a circuit supplied at extra-low voltage, live parts shall be either:

(i) contained in enclosures affording a degree of protection of at least IPXXB or IP2X, or

(ii) provided with insulation capable of withstanding a test voltage of 500 V d.c. for 1 minute. These requirements are in addition to those of Section 414.

422.3.12L Reserved for future use

422.3.13L Except as permitted by 537.1.2, every circuit shall be provided with a means of isolation from all live supply conductors by a linked switch or a linked circuit-breaker.

NOTE – Provision may be made for isolation of a group of circuits by a common means, if the service conditions allow this.

COPYRIGHT

422.3.201 Flexible cables shall be of the following construction:

(i) Heavy duty type having a voltage rating of not less than 450/750 V, or

(ii) suitably protected against mechanical damage.

422.3.202 A heating appliance shall be fixed.

422.3.203 A heat storage appliance shall be of a type which prevents the ignition of combustible dusts or fibres by the heat storing core.

422.4 Combustible constructional materials

The requirements of this clause shall be applied in addition to those of Section 421 in locations where CA2 conditions exist.

NOTE – CA2 conditions exist where a building is mainly constructed of combustible materials, such as wood. See Appendix 5(L).

422.4.1 Precautions shall be taken to ensure that electrical equipment cannot cause the ignition of walls, floors or ceilings. In prefabricated hollow walls containing a pre-installed wiring system including accessories, all boxes and enclosures shall have a degree of protection of at least IP3X where the wall is liable to be drilled during erection.

422.4.2 Except for equipment for which an appropriate product standard specifies requirements, a luminaire shall be kept at an adequate distance from combustible materials. Unless otherwise recommended by the manufacturer, a small spotlight or projector shall be installed at the following minimum distance from combustible materials:

(i)	Rating up to 100 W	0.5 m
(ii)	Over 100 and up to 300 W	0.8m
(iii)	Over 300 and up to 500 W	1.0m.

Lamps and other components of luminaires shall be protected against foreseeable mechanical stresses. Such protective means shall not be fixed to lampholders unless they form an integral part of the luminaire or are fitted in accordance with the manufacturer's instructions.

A luminaire with a lamp that could eject flammable materials in case of failure shall be constructed with a safety protective shield for the lamp in accordance with the manufacturer's instructions.

NOTE – Refer to Table 55.3 regarding the marking of luminaires and their installation or mounting on normally flammable surfaces.

422.4.201 Electrical equipment, e.g. installation boxes and distribution boards, installed on or in a combustible wall shall comply with the relevant standard for enclosure temperature rise.

422.4.202L Electrical equipment that does not comply with 422.4.201 shall be enclosed with a suitable thickness of non-flammable material. The effect of the material on the heat dissipation from electrical equipment shall be taken into account.

422.4.203L Cables shall comply with the requirements of IEC 60332-1-2.

422.4.204L Conduit and trunking systems shall be in accordance with IEC 61386-1 and IEC 61084-1 respectively and shall meet the fire-resistance tests within these standards.

COPYRIGHT

422.5 Fire propagating structures

The requirements of this Code shall be applied in addition to those of Section 421 in locations where CB2 conditions exist.

NOTE 1 – CB2 conditions relate to the propagation of fire and exist where a building has a shape and dimensions which facilitate the spread of fire (e.g. chimney effect), such as high-rise buildings or where a building has a forced ventilation system. See Appendix 5(L).

NOTE 2 – Fire detectors may be provided which ensure the implementation of measures for preventing propagation of fire, for example, the closing of fireproof shutters in ducts, troughs or trunking.

NOTE 3 – Boxes and enclosures according to IEC 60670-1 and IEC 61439 series for use in hollow walls and cables with IEC 60332-3 series can be used.

422.5.1 In structures where the shape and dimensions are such as will facilitate the spread of fire; precautions shall be taken to ensure that the electrical installation cannot propagate a fire (e.g. chimney effect).

422.6L Selection and erection of installations in locations of national, commercial, industrial or public significance

The requirements of 422.1L shall apply to locations that include buildings or rooms with assets of significant value. Examples include national monuments, museums and other public buildings. Buildings such as railway stations and airports are generally considered to be of public significance. Buildings or facilities such as laboratories, computer centres and certain industrial and storage facilities can be of commercial or industrial significance.

The following measures may be considered:

(i) Installation of mineral insulated cables according to IEC 60702

(ii) Installation of cables with improved fire-resisting characteristics in case of a fire hazard

(iii) Installation of cables in non-combustible solid walls, ceilings and floors

(iv) Installation of cables in areas with constructional partitions having a fire-resisting capability for a time of 30 minutes or 90 minutes, the latter in locations housing staircases and needed for an emergency escape.

Where these measures are not practicable improved fire protection may be possible by the use of reactive fire protection systems.

423 Protection against burns

423.1 Excepting equipment for which a Harmonised Standard specifies a limiting temperature, an accessible part of fixed electrical equipment within arm's reach shall not attain a temperature in excess of the appropriate limit stated in Table 42.1. Each such part of the fixed installation likely to attain under normal load conditions, even for a short period, a temperature exceeding the appropriate limit in Table 42.1 shall be guarded so as to prevent accidental contact.

COPYRIGHT

Table 42.1 – Temperature limit under normal load conditions for an accessible part of equipment within arm's reach

Accessible part	Material of accessible surfaces	Maximum temperature (°C)
A hand-held part	Metallic Non-metallic	55 65
A part intended to be touched but not hand-held	Metallic Non-metallic	70 80
A part which need not be touched for normal operation	Metallic Non-metallic	80 90

424 Protection against overheating

424.1L Forced air heating systems

Forced air heating systems shall be such that their electric elements, other than those of central-storage heaters, cannot be activated until the prescribed air flow has been established and are deactivated when the air flow is reduced or stopped. In addition, they shall have two temperatures limiting devices independent of each other which prevent permissible temperatures from being exceeded in air ducts.

424.2L Appliances producing hot water or steam

All electric appliances producing hot water or steam shall be protected by design method or erection against overheating in all service conditions. Unless the appliances complying as a whole with an appropriate Singapore Standard, the protection shall be by means of an appropriate self-resetting device, functioning independently of the thermostat, and, if the appliances has no free water outlet, it shall be provided with a device which limits water pressure.

CHAPTER 43

PROTECTION AGAINST OVERCURRENT

430 Introduction

430.1 Scope

This chapter provides requirements for the protection of live conductors from the effects of overcurrent. It describes how live conductors are protected by one or more devices for the automatic disconnection of the supply in the event of overload current (see Section 433) and fault current (see Section 434), except in cases where the overcurrent is limited in accordance with Section 436 or where the conditions described in 433.3 (omission of devices for protection against overload) or 434.3 (omission of devices for protection against fault current) are met. Co-ordination of overload current protection and fault current protection is also covered (see Section 435).

NOTE 1 – Live conductors protected against overload in accordance with Section 433 are also considered to be protected against faults likely to cause overcurrents of a magnitude similar to overload currents.

NOTE 2 – The requirements of this chapter do not take account of external influences.

COPYRIGHT

NOTE 3 – Protection of conductors according to this Code does not necessarily protect the equipment connected to the conductors.

NOTE 4 – Flexible cables connecting equipment by plugs and socket-outlets to a fixed installation are outside the scope of this chapter.

NOTE 5 – Disconnection does not necessarily mean isolation in this chapter.

430.2 Reserved for future use

430.3 General requirement

A protective device shall be provided to break any overcurrent in the circuit conductors before such a current could cause a danger due to thermal or mechanical effects detrimental to insulation, connections, joints, terminations or the surroundings of the conductors.

The protection against overload current and the protection against fault current shall be co-ordinated in accordance with Section 435.

NOTE – An overcurrent may be an overload current or a fault current.

431 Protection according to the nature of the circuits and the distribution system

431.1 Protection of line conductors

431.1.1 Except where 431.1.2 applies, detection of overcurrent shall be provided for all line conductors and shall cause the disconnection of the conductor in which the overcurrent is detected, but not necessarily the disconnection of the other line conductors except where the disconnection of one line conductor could cause damage or danger.

If disconnection of a single phase may cause danger, for example in the case of a three-phase motor, appropriate precautions shall be taken.

431.1.2 In a TN-S or TT system, for a circuit supplied between line conductors and in which the neutral conductor is not distributed, overcurrent detection need not be provided for one of the line conductors, provided that both the following conditions are simultaneously fulfilled:

(i) There exists, in the same circuit or on the supply side, differential protection intended to detect unbalanced loads and cause disconnection of all the line conductors, and

(ii) The neutral conductor is not distributed from an artificial neutral point of the circuits situated on the load side of the differential protective device mentioned in (i).

431.2 Protection of the neutral conductor

431.2.1 TN-S or TT system

The neutral conductor shall be protected against short-circuit current.

Where the cross-sectional area of the neutral conductor is at least equivalent to that of the line conductors, and the current in the neutral is not expected to exceed the value in the line conductors, it is not necessary to provide overcurrent detection for the neutral conductor or a disconnecting device for that conductor.

COPYRIGHT

Where the cross-sectional area of the neutral conductor is less than that of the line conductors, it is necessary to provide overcurrent detection for the neutral conductor, appropriate to the cross-sectional area of the conductor. The overcurrent detection shall cause the disconnection of the line conductors, but not necessarily of the neutral conductor.

Where the current in the neutral conductor is expected to exceed that in the line conductors refer to 431.2.3.

431.2.2L Reserved for future use

431.2.3 Harmonic currents

Overcurrent detection shall be provided for the neutral conductor in a multiphase circuit where the harmonic content of the line currents is such that the current in the neutral conductor may exceed the current-carrying capacity of that conductor. The overcurrent detection shall cause disconnection of the line conductors but not necessarily the neutral conductor. Where the neutral is disconnected the requirements of 431.3 are applicable.

431.3 Disconnection and reconnection of the neutral conductor

Where disconnection of the neutral conductor is required, disconnection and reconnection shall be such that the neutral conductor shall not be disconnected before the line conductors and shall be reconnected at the same time as or before the line conductors.

432 Nature of protective devices

A protective device shall be of the appropriate type indicated in 432.1 to 432.3.

432.1 Protection against both overload current and fault current

Except as permitted by 434.5.1, a device providing protection against both overload and fault current shall be capable of breaking, and for a circuit-breaker making, any overcurrent up to and including the maximum prospective fault current at the point where the device is installed.

432.2 Protection against overload current only

A device providing protection against overload current is generally an inverse-time-lag protective device whose rated short-circuit breaking capacity may be below the value of the maximum prospective fault current at the point where the device is installed. Such a device shall satisfy the relevant requirements of Section 433.

432.3 Protection against fault current only

A device providing protection against fault current only shall be installed where overload protection is achieved by other means or where Section 433 permits overload protection to be dispensed with. Except as permitted by 434.5.1, a device shall be capable of breaking, and for a circuit-breaker making, the fault current up to and including the prospective fault current. Such a device shall satisfy the relevant requirements of Section 434.

NOTE – Such a device may be:

(i) a circuit-breaker with a short-circuit release, or

(ii) a fuse.

COPYRIGHT

432.4L Characteristics of protective devices

The time/current characteristics of an overcurrent protective device shall comply with those specified in BS 3036, IEC 60269 series, IEC 60898-1, IEC 60947-2 or SS 480. The use of another device is not precluded provided that its time/current characteristics provide a level of protection not less than that given by the devices listed above.

433 Protection against overload current

433.1 Co-ordination between conductor and overload protective device

Every circuit shall be designed so that a small overload of long duration is unlikely to occur.

433.1.1 The operating characteristics of a device protecting a conductor against overload shall satisfy the following conditions:

(i) the rated current or current setting of the protective device (I_n) is not less than the design current (I_b) of the circuit, and

(ii) the rated current or current setting of the protective device (I_n) does not exceed the lowest of the current- carrying capacities (I_z) of any of the conductors of the circuit, and

(iii) the current (I_2) causing effective operation of the protective device does not exceed 1.45 times the lowest of the current-carrying capacities (I_z) of any of the conductors of the circuit.

For adjustable protective devices, the rated current (I_n) is the current setting selected. The current (I_2) ensuring effective operation of the protective device is given in the product standard or may be provided by the manufacturer.

NOTE – Protection in accordance with this Code may not ensure protection in all cases, for example, where sustained overcurrents less than I_2 occur.

433.1.201 Where the protective device is a general purpose type (gG) fuse to IEC 60269-2, a fuse to IEC 60269-3, a circuit-breaker to IEC 60898-1, a circuit-breaker to IEC 60947-2 or a residual current circuit-breaker with integral overcurrent protection (RCBO) to SS 480 compliance with conditions (i) and (ii) also results in compliance with condition (iii) of 433.1.1.

433.1.202 Reserved for future use

433.1.203 For direct buried cables or cables in buried ducts where the tabulated current-carrying capacity is based on an ambient temperature of 20 °C compliance with condition (iii) of 433.1.1 is afforded if the rated current or current setting of the protective device (I_n) does not exceed 0.9 times the current-carrying capacity (I_z) of the lowest rated conductor in the circuit protected.

433.1.204L Accessories to SS 145 may be supplied through a ring final circuit, with or without unfused spurs, protected by a 30 A or 32 A protective device complying with IEC 60269 series, IEC 60898-1, IEC 60947-2 or SS 480. The circuit shall be wired with copper conductors having line and neutral conductors with a minimum cross-sectional area of 2.5 mm^2 except for two-core mineral insulated cables complying with IEC 60702-1, for which the minimum cross-sectional area is 1.5 mm^2. Such circuits are deemed to meet the requirements of 433.1.1 if the current-carrying capacity (I_z) of the cable is not less than 20 A and if, under the intended conditions of use, the load current in any part of the circuit is unlikely to exceed for long periods the current-carrying capacity (I_z) of the cable.

433.2 Position of devices for protection against overload

433.2.1 Except where 433.2.2 or 433.3 applies, a device for protection against overload shall be installed at the point where a reduction occurs in the value of the current-carrying capacity of the conductors of the installation.

COPYRIGHT

NOTE – A reduction in current-carrying capacity may be due to a change in cross-sectional area, method of installation, type of cable or conductor, or in environmental conditions.

433.2.2 The device protecting a conductor against overload may be installed along the run of that conductor if the part of the run between the point where a change occurs (in cross-sectional area, method of installation, type of cable or conductor, or in environmental conditions) and the position of the protective device has neither branch circuits nor outlets for connection of current-using equipment and fulfils at least one of the following conditions:

(i) It is protected against fault current in accordance with the requirements stated in Section 434

(ii) Its length does not exceed 3 m, it is installed in such a manner as to reduce the risk of fault to a minimum, and it is installed in such a manner as to reduce to a minimum the risk of fire or danger to persons (see also 434.2.1).

433.3 Omission of devices for protection against overload

This clause shall not be applied to installations situated in locations presenting a fire risk or risk of explosion or where the requirements for special installations and locations specify different conditions.

433.3.1 General

A device for protection against overload need not be provided:

(i) for a conductor situated on the load side of the point where a reduction occurs in the value of current- carrying capacity, where the conductor is effectively protected against overload by a protective device installed on the supply side of that point

(ii) for a conductor which, because of the characteristics of the load or the supply, is not likely to carry overload current, provided that the conductor is protected against fault current in accordance with the requirements of Section 434

(iii) at the origin of an installation where the supplier provides an overload device and agrees that it affords protection to the part of the installation between the origin and the main distribution point of the installation where further overload protection is provided.

433.3.2L Reserved for future use

433.3.3 Omission of devices for protection against overload for safety reasons

The omission of devices for protection against overload is permitted for circuits supplying current-using equipment where unexpected disconnection of the circuit could cause danger or damage.

Examples of such circuits are:

(i) the exciter circuit of a rotating machine

(ii) the supply circuit of a lifting magnet

(iii) the secondary circuit of a current transformer

(iv) a circuit supplying a fire extinguishing device

(v) a circuit supplying a safety service, such as a fire alarm or a gas alarm

(vi) a circuit supplying medical equipment used for life support in specific medical locations.

NOTE – In such situations consideration should be given to the provision of an overload alarm.

COPYRIGHT

433.4 Overload protection of conductors in parallel

Where a single protective device protects two or more conductors in parallel there shall be no branch circuits or devices for isolation or switching in the parallel conductors.

This clause does not preclude the use of ring final circuits with or without spur connections.

433.4.1 Equal current sharing between parallel conductors

Except for a ring final circuit, where spurs are permitted, where a single device protects conductors in parallel and the conductors are sharing currents equally, the value of I_z to be used in 433.1.1 is the sum of the current-carrying capacities of the parallel conductors.

It is deemed that current sharing is equal if the requirements of the first indent of 523.7(i) are satisfied.

433.4.2 Unequal current sharing between parallel conductors

Where the use of a single conductor is impractical and the currents in the parallel conductors are unequal, the design current and requirements for overload protection for each conductor shall be considered individually.

NOTE – Currents in parallel conductors are considered to be unequal if the difference between the currents is more than 10% of the design current for each conductor. See Paragraph 2 of Appendix 10(L).

434 Protection against fault current

This section only considers the case of a fault between conductors belonging to the same circuit.

434.1 Determination of prospective fault current

The prospective fault current shall be determined at every relevant point of the installation. This shall be done by calculation, measurement or enquiry.

434.2 Position of devices for protection against fault current

A device providing protection against fault current shall be installed at the point where a reduction in the cross-sectional area or other change causes a reduction in the current-carrying capacity of the conductors, except where 434.2.1, 434.2.2 or 434.3 applies.

The requirements in 434.2.1 and 434.2.2 shall not be applied to installations situated in locations presenting a fire risk or risk of explosion or where special requirements for certain locations specify different conditions.

434.2.1 Except where 434.2.2 or 434.3 applies, a device for protection against fault current may be installed other than as specified in 434.2, under the following conditions:

In the part of the conductor between the point of reduction of cross-sectional area or other change and the position of the protective device there shall be no branch circuits or socket-outlets and that part of the conductor shall:

(i) not exceed 3 m in length, and

(ii) be installed in such a manner as to reduce the risk of fault to a minimum, and

NOTE – This condition may be obtained, for example, by reinforcing the protection of the wiring against external influences.

(iii) be installed in such a manner as to reduce to a minimum the risk of fire or danger to persons.

COPYRIGHT

434.2.2 The device protecting a conductor may be installed on the supply side of the point where a change occurs (in cross-sectional area, method of installation, type of cable or conductor, or in environmental conditions) provided that it possesses an operating characteristic such that it protects the wiring situated on the load side against fault current, in accordance with 434.5.2L.

434.3 Omission of devices for protection against fault current

A device for protection against fault current need not be provided for:

(i) a conductor connecting a generator, transformer, rectifier or an accumulator battery to the associated control panel where the protective device is placed in the panel

(ii) a circuit where disconnection could cause danger for the operation of the installation concerned, such as those quoted in 433.3.3

(iii) certain measuring circuits

(iv) the origin of an installation where the supplier installs one or more devices providing protection against fault current and agrees that such a device affords protection to the part of the installation between the origin and the main distribution point of the installation where further protection against fault current is provided,

and if both of the following conditions are simultaneously fulfilled:

(a) The wiring is carried out in such a way as to reduce the risk of fault to a minimum (see item (ii) of 434.2.1), and

(b) The wiring is installed in such a manner as to reduce to a minimum the risk of fire or danger to persons.

434.4 Fault current protection of conductors in parallel

A single protective device may protect conductors in parallel against the effects of fault currents provided that the operating characteristic of the device results in its effective operation should a fault occur at the most onerous position in one of the parallel conductors. Account shall be taken of the sharing of the fault currents between the parallel conductors. A fault can be fed from both ends of a parallel conductor.

If operation of a single protective device may not be effective, then one or more of the following measures shall be taken:

(i) The wiring shall be installed in such a manner as to reduce to a minimum the risk of a fault in any parallel conductor, for example, by the provision of protection against mechanical damage. In addition, conductors shall be installed in such a manner as to reduce to a minimum the risk of fire or danger to persons

(ii) For two conductors in parallel, a fault current protective device shall be provided at the supply end of each parallel conductor

(iii) For more than two conductors in parallel, a fault current protective device shall be provided at the supply and load ends of each parallel conductor.

NOTE – Further information is given in Paragraph 3 of Appendix 10(L).

434.5 Characteristics of a fault current protective device

Every fault current protective device shall meet the requirements of this clause.

COPYRIGHT

434.5.1 Except where the following paragraph applies, the rated short-circuit breaking capacity of each device shall be not less than the maximum prospective fault current at the point at which the device is installed.

A lower breaking capacity is permitted if another protective device or devices having the necessary rated short- circuit breaking capacity is installed on the supply side. In this situation, the characteristics of the devices shall be co-ordinated so that the energy let-through of these devices does not exceed that which can be withstood, without damage, by the device(s) on the load side.

NOTE – Technical data for the selection of protective devices can be requested from the manufacturer.

434.5.2L A fault occurring at any point in a circuit shall be interrupted within a time such that the fault current does not cause the permitted limiting temperature of any conductor or cable to be exceeded. For a fault of very short duration (less than 0.1 sec), for current limiting devices $k^2 S^2$ shall be greater than the value of let-through energy (I^2t) quoted for the Class of protective device to IEC 60898-1, IEC 60898-2 or SS 480, or as quoted by the manufacturer.

The time, t, in which a given fault current will raise the live conductors from the highest permissible temperature in normal duty to the limiting temperature, can, as an approximation, be calculated from the formula:

$$t = \frac{k^2 S^2}{i^2}$$

where:

t is the duration in seconds

S is the cross-sectional area of conductor in mm2

I is the effective fault current, in amperes, expressed for a.c. as the rms value, due account being taken of the current limiting effect of the circuit impedances

k is a factor taking account of the resistivity, temperature coefficient and heat capacity of the conductor material, and the appropriate initial and final temperatures. For common materials, the values of k are shown in Table 43.1.

Table 43.1 – Values of k for common materials, for calculation of the effects of fault current for disconnection times up to 5 seconds

Conductor insulation	Thermoplastic				Thermosetting		Mineral insulated	
	90 °C		70 °C		90 °C	60 °C	Thermoplastic sheath	Bare (unsheathed)
Conductor cross-sectional area	≤ 300 mm²	> 300 mm²	≤ 300 mm²	> 300 mm²				
Initial temperature	90 °C		70 °C		90 °C	60 °C	70 °C	105 °C
Final temperature	160 °C	140 °C	160 °C	140 °C	250 °C	200 °C	160 °C	250 °C
Copper conductor	k = 100	k = 86	k = 115	k = 103	k = 143	k = 141	k = 115	k = 135/115[a]
Aluminium conductor	k = 66	k = 57	k = 76	k = 68	k = 94	k = 93		
Tin soldered joints in copper conductors	k = 100	k = 86	k = 115	k = 103	k = 100	k = 122		

[a] This value shall be used for bare cables exposed to touch.

NOTE 1 – The rated current or current setting of the fault current protective device may be greater than the current-carrying capacity of the cable.

NOTE 2 – Other values of k can be determined by reference to IEC 60949.

COPYRIGHT

434.5.3L For a busbar trunking system complying with IEC 61439-6, one of the following requirements shall apply:

(i) The rated short-time withstand current (Icw) and the rated peak withstand current of a busbar trunking system shall be not lower than the rms value of the prospective fault current and the prospective fault peak current value, respectively. The maximum time for which the Icw is defined for the busbar trunking system shall be greater than the maximum operating time of the protective device

(ii) The rated conditional short-circuit current of the busbar trunking system associated with a specific protective device shall be not lower than the prospective fault current.

435 Co-ordination of overload current and fault current protection

435.1 Protection afforded by one device

A protective device providing protection against both overload current and fault current shall fulfil the requirements of the relevant clauses in Sections 433 and 434.

Except as required by 434.4 or 434.5.2L, where an overload protective device complying with 433.1 is to provide fault current protection and has a rated short-circuit breaking capacity not less than the value of the maximum prospective fault current at its point of installation, it may be assumed that the requirements of this section are satisfied as regards fault current protection of the conductors on the load side of that point.

The validity of the assumption shall be checked, where there is doubt, for conductors in parallel and for certain types of circuit-breaker e.g. non-current-limiting types.

435.2 Protection afforded by separate devices

The requirements of Sections 433 and 434 apply, respectively, to the overload current protective device and the fault current protective device.

The characteristics of the devices shall be co-ordinated so that the energy let through by the fault current protective device does not exceed that which can be withstood without damage by the overload protective device (see 536.1). This requirement does not exclude the type of co-ordination specified in IEC 60947-4-1. For a circuit incorporating a motor starter, this requirement does not preclude the type of co-ordination described in IEC 60947-4-1, in respect of which the advice of the manufacturer of the starter shall be sought.

436 Limitation of overcurrent by the characteristics of the supply

Conductors are considered to be protected against overload current and fault current where they are supplied from a source incapable of supplying a current exceeding the current-carrying capacity of the conductors (e.g. certain bell transformers, certain welding transformers and certain types of thermoelectric generating set).

CHAPTER 44

RESERVED FOR FUTURE USE

COPYRIGHT

PART 5

SELECTION AND ERECTION OF EQUIPMENT

CONTENTS

CHAPTER 51 COMMON RULES

510 Introduction
510.1 General
510.2 Reserved for future use

511 Compliance with standards

512 Operational conditions and external influences
512.1 Operational conditions
512.2 External influences

513 Accessibility

514 Identification and notices
514.1 General
514.2 Reserved for future use
514.3 Identification of conductors
514.4 Identification of conductors by colour
514.5 Identification of conductors by letters and/or numbers
514.6 Omission of identification by colour or marking
514.7 Reserved for future use
514.8 Identification of a protective device
514.9 Diagrams and documentation
514.10 Warning notice: voltage
514.11 Warning notice: isolation
514.12 Notices: periodic inspection and testing
514.13 Warning notice: earthing and bonding connections
514.14 Warning notice: non-standard colours
514.15 Warning notice: alternative supplies
514.16L Notice: high protective conductor current

515 Prevention of mutual detrimental
515.1 Prevention of mutual detrimental influence
515.3 Reserved for future use

CHAPTER 52 SELECTION AND ERECTION OF WIRING SYSTEMS

520 Introduction
520.1 Scope
520.2 Reserved for future use
520.3 Reserved for future use
520.4 General
520.5L Cables and conductors for low voltage

COPYRIGHT

521L Types of wiring system
521.4L Busbar trunking systems
521.5 A.C. circuits: electromagnetic effects
521.6 Conduit, ducting, trunking, tray and ladder systems
521.7 Multicore cables: two or more circuits
521.8 Circuit arrangements
521.9 Use of flexible cables
521.10 Installation of cables

522 Selection and erection of wiring systems in relation to external influences
522.1 Ambient temperature (AA)
522.2 External heat sources
522.3 Presence of water (AD) or high humidity (AB)
522.4 Presence of solid foreign bodies (AE)
522.5 Presence of corrosive or polluting substances (AF)
522.6L Impact (AG), including concealed wiring
522.7 Vibration (AH)
522.8 Other mechanical stresses (AJ)
522.9 Presence of flora and/or mould growth (AK)
522.10 Presence of fauna (AL)
522.11 Solar radiation (AN) and ultraviolet radiation
522.12 Seismic effects (AP)
522.13 Movement of air (AR)
522.14 Nature of processed or stored materials (BE)
522.15 Building design (CB)

523 Current-carrying capacities of cables
523.5L Groups containing more than one circuit
523.6 Number of loaded conductors
523.7L Conductors in parallel
523.8 Variation of installation conditions along a route
523.9L Cables in thermal insulation
523.201 Armoured single-core cables

524 Cross-sectional areas of conductors
524.2 Neutral conductors

525 Voltage drop in consumers' installations

526 Electrical connections
526.9 Connection of multiwire, fine wire and very fine wire conductors

527 Selection and erection of wiring systems to minimise the spread of fire
527.1 Precautions within a fire-segregated compartment
527.2 Sealing of wiring system penetrations

528 Proximity of wiring systems to other services
528.1 Proximity to electrical services
528.2 Proximity of communications cables
528.3 Proximity to non-electrical services

529 Selection and erection of wiring systems in relation to maintainability, including cleaning

COPYRIGHT

CHAPTER 53 PROTECTION, ISOLATION, SWITCHING, CONTROL AND MONITORING

530 Introduction
530.1 Scope
530.2 Reserved for future use
530.3 General and common requirements
530.4 Reserved for future use

531 Devices for fault protection by automatic disconnection of supply
531.1 Overcurrent protective devices
531.2 RCDs
531.3 RCDs in a TN-S system
531.4 RCDs in a TT system
531.5 Reserved for future use
531.6 Insulation monitoring devices

532 Devices for protection against the risk of fire

533 Devices for protection against overcurrent
533.1L General requirements
533.2 Selection of devices for overload protection of wiring systems
533.3 Selection of devices for protection of wiring systems against fault current

534 Devices for protection against overvoltage
534.1L Scope and object
534.2 Selection and erection of surge protective devices

535 Devices for protection against undervoltage

536 Co-ordination of protective devices
536.1 General
536.2 Selectivity between overcurrent protective devices
536.3 Selectivity between RCDs
536.4 Back-up protection
536.5 Co-ordination of switching devices with overcurrent protective devices

537 Isolation and switching
537.1 General
537.2 Isolation
537.3 Switching off for mechanical maintenance
537.4 Emergency switching
537.5 Functional switching (control)
537.6 Firefighter's switches

538 Reserved for future use

CHAPTER 54 EARTHING ARRANGEMENTS AND PROTECTIVE CONDUCTORS

541 General

COPYRIGHT

542 Earthing arrangements
542.1 General requirements
542.2 Earth electrodes
542.3L Earthing conductors
542.4 Main earthing terminals or bars

543 Protective conductors
543.1 Cross-sectional areas
543.2 Types of protective conductor
543.3 Preservation of electrical continuity of protective conductors
543.4 Reserved for future use
543.5 Earthing arrangements for combined protective and functional purposes
543.6 Earthing arrangements for protective purposes
543.7 Earthing requirements for the installation of equipment having high protective conductor currents

544 Protective bonding conductors
544.1 Main protective bonding conductors
544.2 Supplementary bonding conductors

CHAPTER 55 OTHER EQUIPMENT

551 Low voltage generating sets
551.1L Scope
551.2 General requirements
551.3 Protective measure: Extra-low voltage provided by SELV or PELV
551.4 Fault protection
551.5 Protection against overcurrent
551.6 Reserved for future use
551.7 Reserved for future use
551.8 Requirements for installations incorporating stationary batteries

552 Rotating machines
552.1 Rotating machines

553 Accessories
553.1 Plugs and socket-outlets
553.2 Cable couplers
553.3L Lamp holders

554 Current-using equipment
554.1 Electrode water heaters and boilers
554.2 Heaters for liquids or other substances having immersed heating elements
554.3 Water heaters having immersed and uninsulated heating elements
554.4 Reserved for futue use
554.5 Reserved for future use

555 Transformers
555.1 Autotransformers and step-up transformers

556 Reserved for future use

COPYRIGHT

557 Auxiliary circuits
557.1 Scope
557.2 Reserved for futue use
557.3 Requirements for auxiliary circuits
557.4 Characteristics of cables and conductors
557.5 Requirements for auxiliary circuits used for measurement
557.6 Functional considerations

558 Reserved for future use

559 Luminaires and lighting installations
559.1 Scope
559.2 Reserved for future use
559.3 General requirements for installations
559.4 Protection of the surroundings against thermal effects
559.5 Wiring systems
559.6 Independent lamp controlgear, e.g. ballasts
559.7 Compensation capacitors
559.8 Protection against electric shock for display stands for luminaires
559.9 Stroboscopic effect
559.10 Reserved for future use
559.11 Reserved for future use

CHAPTER 56 SAFETY SERVICES

560.1 Scope
560.2 Reserved for future use
560.3 Reserved for future use
560.4 Classification
560.5 General
560.6 Electrical sources for safety services
560.7 Circuits of safety services
560.8 Wiring systems
560.9L Emergency lighting system
560.10L Fire detection and fire alarm systems

COPYRIGHT

PART 5

SELECTION AND ERECTION OF EQUIPMENT

CHAPTER 51

COMMON RULES

510 Introduction

510.1 General

This chapter deals with the selection of equipment and its erection. It provides common rules for compliance with measures of protection for safety, requirements for proper functioning for intended use of the installation, and requirements appropriate to the external influences.

510.2 Reserved for future use

510.3L Every item of equipment shall be selected and erected so as to allow compliance with the clauses stated in this chapter and the relevant clauses in other chapters of this Code and shall take account of manufacturers' instructions.

511 Compliance with standards

511.1L Every item of equipment shall comply with the relevant requirements of the applicable Singapore Standard, appropriate to the intended use of the equipment. The edition of the standard shall be the current edition, with those amendments pertaining at a date to be agreed by the parties to the contract concerned. See Appendix 1(L).

Alternatively, if equipment complying with a foreign national standard based on an IEC Standard is to be used, the designer or other person responsible for specifying the installation shall verify that any differences between that standard and the corresponding Singapore Standard will not result in a lesser degree of safety than that afforded by compliance with the Singapore Standard.

511.2L Where equipment to be used is not covered by a Singapore Standard or is used outside the scope of its standard, the designer or other person responsible for specifying the installation shall confirm that the equipment provides at least the same degree of safety as that afforded by compliance with this Code. Every item of equipment shall be suitable for the nominal voltage (U_0) of the installation or part of the installation concerned, where necessary taking account of the highest and/or lowest voltage likely to occur in normal service.

512 Operational conditions and external influences

512.1 Operational conditions

512.1.1L Voltage

Every item of equipment shall be suitable for the nominal voltage (U_0) of the installation or the part of the installation concerned, where necessary taking account of the highest and/or lowest voltage likely to occur in normal service.

COPYRIGHT

512.1.2 Current

Every item of equipment shall be suitable for:

(i) the design current, taking into account any capacitive and inductive effects, and

(ii) the current likely to flow in abnormal conditions for such periods of time as are determined by the characteristics of the protective devices concerned.

512.1.3 Frequency

If frequency has an influence on the characteristics of the equipment, the rated frequency of the equipment shall correspond to the nominal frequency of the supply to the circuit concerned.

512.1.4 Power

Every item of equipment selected on the basis of its power characteristics shall be suitable for the duty demanded of the equipment.

512.1.5L Compatibility

Every item of equipment shall be selected and erected so that it will neither cause harmful effects to other equipment nor impair the supply during normal service including switching operations.

Switchgear, protective devices, accessories and other types of equipment shall not be connected to conductors intended to operate at a temperature exceeding 70 °C at the equipment in normal service unless the equipment manufacturer has confirmed that the equipment is suitable for such conditions, or the conductor size shall be chosen based on the current ratings for 70° C cables of a similar construction. See also 523.1 and Table 4A in Appendix 4(L).

512.1.6L Impulse withstand voltage

Equipment shall be selected so that its impulse voltage withstand is at least equal to the required minimum impulse withstand voltage according to the overvoltage category at the point of installation as defined in relevant part of the SS 555 series.

512.2 External influences

512.2.1 Equipment shall be of a design appropriate to the situation in which it is to be used or its mode of installation shall take account of the conditions likely to be encountered.

512.2.2 If the equipment does not, by its construction, have the characteristics relevant to the external influences of its location, it may nevertheless be used on condition that it is provided with appropriate additional protection in the erection of the installation. Such protection shall not adversely affect the operation of the equipment thus protected.

512.2.3 Where different external influences occur simultaneously, they may have independent or mutual effects and the degree of protection shall be provided accordingly.

512.2.4L The selection of equipment according to external influences is necessary not only for proper functioning, but also to ensure the reliability of the measures of protection for safety complying with these clauses generally. Measures of protection afforded by the construction of equipment are valid only for the given conditions of external influence if the corresponding equipment specification tests are made in these conditions of external influence.

COPYRIGHT

NOTE 1 – For the purpose of these clauses, the following classes of external influence are conventionally regarded as normal:

AA Ambient temperature	AA4
AB Atmospheric humidity	AB4
Other environmental conditions (AC to AS)	XX1 of each parameter
Utilisation and construction	XX1 of each parameter, except
of buildings (B and C)	XX2 for the parameter BC

NOTE 2 – The word "normal" appearing in the third column of the table in Appendix 5(L) signifies that the requirement should generally satisfy applicable standards.

513 Accessibility

513.1 Except for a joint in cables where Section 526 allows such a joint to be inaccessible, every item of equipment shall be arranged so as to facilitate its operation, inspection and maintenance and access to each connection. Such facility shall not be significantly impaired by mounting equipment in an enclosure or a compartment.

514 Identification and notices

514.1 General

514.1.1 Except where there is no possibility of confusion, a label or other suitable means of identification shall be provided to indicate the purpose of each item of switchgear and controlgear. Where the operator cannot observe the operation of switchgear and controlgear and where this might lead to danger, a suitable indicator complying, where applicable, with IEC 60073 and IEC 60447, shall be fixed in a position visible to the operator.

514.1.2 So far as is reasonably practicable, wiring shall be so arranged or marked that it can be identified for inspection, testing, repair or alteration of the installation.

514.1.3L Except where there is no possibility of confusion, unambiguous marking shall be provided at the interface between conductors identified in accordance with this Code and conductors identified to previous versions of this Code.

NOTE – Appendix 7(L) gives guidance on how this can be achieved.

514.2 Reserved for future use

514.3 Identification of conductors

514.3.1L Except where identification is not required by 514.6, cores of cables shall be identified by:

(i) colour as required by 514.4 and/or

(ii) lettering and/or numbering as required by 514.5.

514.3.2 Every core of a cable shall be identifiable at its terminations and preferably throughout its length. Binding and sleeves for identification purposes shall comply with BS 3858 where appropriate.

514.3.3 Reserved for future use

COPYRIGHT

514.4 Identification of conductors by colour

514.4.1 Neutral or midpoint conductor

Where a circuit includes a neutral or midpoint conductor identified by colour, the colour used shall be blue.

514.4.2L Protective conductor

The bi-colour combination green-and-yellow shall be used exclusively for identification of a protective conductor and this combination shall not be used for any other purpose. In this combination one of the colours shall cover at least 30% and at most 70% of the surface being coloured, while the other colour shall cover the remainder of the surface.

Single-core cables that are coloured green-and-yellow throughout their length shall only be used as a protective conductor and shall not be overmarked at their terminations.

A bare conductor or busbar used as a protective conductor shall be identified, where necessary, by equal green-and- yellow stripes, each not less than 15 mm and not more than 100 mm wide, close together, either throughout the length of the conductor or in each compartment and unit and at each accessible position.

514.4.3 Reserved for future use

514.4.4 Other conductors

Other conductors shall be identified by colour in accordance with Table 51.

514.4.5 The single colour green shall not be used.

514.4.6 Bare conductors

A bare conductor shall be identified, where necessary, by the application of tape, sleeve or disc of the appropriate colour prescribed in Table 51 or by painting with such a colour.

514.5 Identification of conductors by letters and/or numbers

514.5.1 The lettering or numbering system applies to identification of individual conductors and of conductors in a group. The identification shall be clearly legible and durable. All numerals shall be in strong contrast to the colour of the insulation. The identification shall be given in letters or Arabic numerals. In order to avoid confusion, unattached numerals 6 and 9 shall be underlined.

514.5.2 Protective conductor

Conductors with green-and-yellow colour identification shall not be numbered other than for the purpose of circuit identification.

514.5.3 Alphanumeric

The preferred alphanumeric system is described in Table 51.

514.5.4 Numeric

Conductors may be identified by numbers, the number 0 being reserved for the neutral or midpoint conductor.

COPYRIGHT

514.6 Omission of identification by colour or marking

514.6.1L Identification by colour or marking is not required for:

(i) concentric conductors of cables

(ii) metal sheath or armour of cables when used as a protective conductor

(iii) bare conductors where permanent identification is not practicable.

Table 51 – Identification of conductors

Function	Alphanumeric	Colour
Protective conductors		Green-and-yellow
Functional earthing conductor		Cream
a.c. power circuit(1)		
Line of single-phase circuit	L	Brown
Neutral of single- or three-phase circuit	N	Blue
Line 1 of three-phase a.c. circuit	L1	Brown
Line 2 of three-phase a.c. circuit	L2	Black
Line 3 of three-phase a.c. circuit	L3	Grey
Two-wire unearthed d.c. power circuit		
Positive of two-wire circuit	L+	Brown
Negative of two-wire circuit	L-	Grey
Two-wire earthed d.c. power circuit		
Positive (of negative earthed) circuit	L+	Brown
Negative (of negative earthed) circuit(2)	M	Blue
Positive (of positive earthed) circuit(2)	M	Blue
Negative (of positive earthed) circuit	L-	Grey
Three-wire d.c. power circuit		
Outer positive of two-wire circuit derived from three-wire system	L+	Brown
Outer negative of two-wire circuit derived from three-wire system	L-	Grey
Positive of three-wire circuit	L+	Brown
Mid-wire of three-wire circuit(2)(3)	M	Blue
Negative of three-wire circuit	L-	Grey
Control circuits, ELV and other applications		
Line conductor	L	Brown, Black, Red, Orange, Yellow, Violet, Grey, White, Pink or Turquoise
Neutral or mid-wire(4)	N or M	Blue

NOTES –

(1) Power circuits include lighting circuits.

(2) M identifies either the mid-wire of a three-wire d.c. circuit, or the earthed conductor of a two-wire earthed d.c. circuit.

(3) Only the middle wire of three-wire circuits may be earthed.

(4) An earthed PELV conductor is blue.

COPYRIGHT

514.7 Reserved for future use

514.8 Identification of a protective device

514.8.1 A protective device shall be arranged and identified so that the circuit protected may be easily recognised.

514.9 Diagrams and documentation

514.9.1L A legible diagram, chart or table or equivalent form of information shall be provided indicating in particular:

(i) the type and composition of each circuit (points of utilisation served, number and size of conductors, type of wiring), and

(ii) the method used for compliance with 410.3.2L, and

(iii) the information necessary for the identification of each device performing the functions of protection, isolation and switching, and its location, and

(iv) any circuit or equipment vulnerable to a typical test.

For simple installations the foregoing information may be given in a schedule. A durable copy of the schedule relating to a distribution board shall be provided within or adjacent to each distribution board.

Any symbol used shall comply with IEC 60617.

514.9.2 Reserved for future use

514.10 Warning notice: voltage

514.10.1 Every item of equipment or enclosure within which a nominal voltage exceeding 230 V to earth exists and where the presence of such a voltage would not normally be expected, shall be so arranged that before access is gained to a live part, a warning of the maximum voltage present is clearly visible.

514.11 Warning notice: isolation

514.11.1L A notice of such durable material as to be likely to remain easily legible throughout the life of the installation in accordance with 537.2.1.3, shall be fixed in each position where there are live parts which are not capable of being isolated by a single device. The location of each disconnector (isolator) shall be indicated unless there is no possibility of confusion.

514.12 Notices: periodic inspection and testing

514.12.1L A notice of such durable material as to be likely to remain easily legible throughout the life of the installation, shall be fixed in a prominent position at or near the origin of every installation upon completion of the work carried out in accordance with Chapter 61 or 62. The notice shall be inscribed in indelible characters not smaller than those illustrated here and shall read as follows:

COPYRIGHT

IMPORTANT

This installation should be periodically inspected and tested and a report on its condition obtained, as required by the Electricity (Electrical Installations) Regulations.

Date of last inspection .....

Date of next inspection .....
(recommended by LEW*)

*LEW means Licensed Electrical Worker under the Electricity Act.

NOTE – Warning Notice shall have words in black against a yellow background and shall be durably marked in legible type not smaller than that illustrated here.

514.12.2 Where an installation incorporates an RCD a notice shall be fixed in a prominent position at or near the origin of the installation. The notice shall be in indelible characters not smaller than those illustrated here and shall read as follows:

This installation, or part of it, is protected by a device which automatically switches off the supply if an earth fault develops. Test quarterly by pressing the button marked 'T' or 'Test'. The device should switch off the supply and should then be switched on to restore the supply. If the device does not switch off the supply when the button is pressed, seek expert advice.

NOTE – Testing frequencies of RCDs in temporary installations may need increasing.

514.13 Warning notices: earthing and bonding connections

514.13.1L A durable label to SS 322 with the words "Safety Electrical Connection – Do Not Remove" shall be permanently fixed in a visible position at or near:

(i) the point of connection of every earthing conductor to an earth electrode, and

(ii) the point of connection of every bonding conductor to an extraneous-conductive-part, and

(iii) the main earth terminal, where separate from main switchgear.

COPYRIGHT

514.13.2L Where 418.2.5L or 418.3L applies, the warning notice specified shall be durably marked in legible type not smaller than that illustrated here and shall read as follows:

> The protective bonding conductors associated with the electrical installation in this location SHALL NOT BE CONNECTED TO EARTH.
>
> Equipment having exposed-conductive-parts connected to earth shall not be brought into this location.

514.14 Warning notice: non-standard colours

514.14.1L If wiring additions or alterations are made to an installation such that some of the wiring complies with 514.4 but there is also wiring to previous versions of these clauses, a warning notice shall be affixed at or near the appropriate distribution board with the following wording:

> **CAUTION**
>
> This installation has both old and new cable colour codes. Great care should be taken before undertaking extension, alteration or repair that all conductors are correctly identified.

514.15 Warning notice: alternative supplies

514.15.1 Where an installation includes alternative or additional sources of supply, warning notices shall be affixed at the following locations in the installation:

(i) At the origin of the installation

(ii) At the meter position, if remote from the origin

(iii) At the consumer unit or distribution board to which the alternative or additional sources are connected

(iv) At all points of isolation of all sources of supply.

The warning notice shall have the following wording:

> **WARNING – MULTIPLE SUPPLIES**
>
> Isolate all electrical supplies before carrying out work.
>
> Isolate the mains supply at .....
>
> Isolate the alternative supplies at .....

COPYRIGHT

514.16L Notice: high protective conductor current

See 543.7.1.205.

515 Prevention of mutual detrimental

515.1 Prevention of mutual detrimental influence

Electrical equipment shall be selected and erected so as to avoid any harmful influence between the electrical installation and any non-electrical installations envisaged.

NOTE – For EMC see Sections 332,

515.2 Where equipment carrying current of different types or at different voltages is grouped in a common assembly (such as a switchboard, a cubicle or a control desk or box), all the equipment belonging to any one type of current or any one voltage shall be effectively segregated wherever necessary to avoid mutual detrimental influence.

The immunity levels of equipment shall be chosen taking into account the electromagnetic disturbances that can occur when connected and erected as for normal use, and taking into account the intended level of continuity of service necessary for the application. See the specific equipment standard or the relevant part of IEC 61000 series.

515.3 Reserved for future use

CHAPTER 52

SELECTION AND ERECTION OF WIRING SYSTEMS

520 Introduction

520.1 Scope

This Chapter deals with the selection and erection of wiring systems.

NOTE – These clauses also apply in general to protective conductors. Chapter 54 contains further requirements for those conductors.

520.2 Reserved for future use

520.3 Reserved for future use

520.4 General

Consideration shall be given to the application of the fundamental principles of Chapter 13 as it applies to:

(i) cables and conductors

(ii) their connections, terminations and/or jointing

(iii) their associated supports or suspensions, and

(iv) their enclosure or methods of protection against external influences.

COPYRIGHT

520.5L Cables and conductors for low voltage

Every non-flexible or flexible cable or flexible cord for use at low voltage shall comply with the appropriate Singapore Standards.

For any type of cable, conductors shall be of copper when:

- cross-sectional area of conductor is 10 mm^2 or less; or
- the cable is to be used in an installation whether wholly or partly for domestic purposes.

For aerial use or suspension any non-flexible cable sheathed with lead, pvc or an elastomeric material may incorporate a catenary wire or include hard-drawn copper conductors.

521L Types of wiring system

The requirements of 521.1 to 521.3 do not apply to busbar systems covered by 521.4.

521.1 The installation method of a wiring system in relation to the type of conductor or cable used shall be in accordance with Table 4A of Appendix 4(L), provided the external influences are taken into account according to Section 522.

521.2 The installation method of a wiring system in relation to the situation concerned shall be in accordance with Table 4A of Appendix 4(L). Other methods of installation of cables and conductors not included in Table 4A are permitted provided that they fulfil the requirements of this chapter.

521.3 Examples of wiring systems, excluding systems covered by 521.4, are shown in Table 4A. Table 4A gives examples of installation methods of cables including reference method for obtaining current- carrying capacity where it is considered that the same current-carrying capacities can safely be used. It does not imply that such methods shall be employed or that other methods are prohibited.

521.201 Prefabricated wiring systems intended for permanent connection in fixed installations incorporating installation couplers conforming to IEC 61535, shall comply with BS 8488.

521.4L Busbar trunking systems

A busbar trunking system shall comply with IEC 61439-6. A busbar trunking system shall be installed in accordance with the manufacturer's instructions taking account of external influences. See also Appendix 8(L).

521.5 A.C. circuits: electromagnetic effects

521.5.1 Ferromagnetic enclosures: electromagnetic effects

The conductors of an a.c. circuit installed in a ferromagnetic enclosure shall be arranged so that all line conductors and the neutral conductor, if any, and the appropriate protective conductor are contained within the same enclosure.

Where such conductors enter a ferrous enclosure, they shall be arranged such that the conductors are only collectively surrounded by ferromagnetic material.

These requirements do not preclude the use of an additional protective conductor in parallel with the steel wire armouring of a cable where such is required to comply with the requirements of the appropriate clauses in Chapters 41 and 54. It is permitted for such an additional protective conductor to enter the ferrous enclosure individually.

COPYRIGHT

521.5.2 Single-core cables armoured with steel wire or steel tape shall not be used for an a.c. circuit.

NOTE – The steel wire or steel tape armour of a single-core cable is regarded as a ferromagnetic enclosure. For single-core armoured cables, the use of aluminium armour may be considered.

521.5.201 Electromechanical stresses

Every conductor or cable shall have adequate strength and be so installed as to withstand the electromechanical forces that may be caused by any current, including fault current, it may have to carry in service.

521.6 Conduit, ducting, trunking, tray and ladder systems

Two or more circuits are allowed in the same conduit, ducting or trunking system provided the requirements of Section 528 are met.

Cable conduits shall comply with the appropriate part of the IEC 61386 series, cable trunking or ducting shall comply with the appropriate part of the IEC 61084 series and cable tray and ladder systems shall comply with IEC 61537.

521.7 Multicore cables: two or more circuits

Two or more circuits are allowed in the same cable provided the requirements of Section 528 are met.

521.8 Circuit arrangements

521.8.1 Each part of a circuit shall be arranged such that the conductors are not distributed over different multicore cables, conduits, ducting systems, trunking systems or tray or ladder systems.

This requirement need not be met where a number of multicore cables, forming one circuit, are installed in parallel. Where multicore cables are installed in parallel each cable shall contain one conductor of each line.

521.8.2 The line and neutral conductors of each final circuit shall be electrically separate from those of every other final circuit, so as to prevent the indirect energising of a final circuit intended to be isolated.

521.8.3 Where two or more circuits are terminated in a single junction box this shall comply with IEC 60670-22.

521.9 Use of flexible cables

521.9.1 A flexible cable shall be used for fixed wiring only where the relevant provisions of the clauses are met. Flexible cables used for fixed wiring shall be of the heavy duty type unless the risk of damage during installation and service, due to impact or other mechanical stresses, is low or has been minimised or protection against mechanical damage is provided.

NOTE – Descriptions of light, normal and heavy duty types are given in IEC 62440.

521.9.2 Equipment that is intended to be moved in use shall be connected by flexible cables, except equipment supplied by contact rails.

521.9.3 Stationary equipment which is moved temporarily for the purposes of connecting, cleaning etc., e.g. cookers or flush-mounting units for installations in false floors, shall be connected with flexible cable. If the equipment is not subject to vibration then non-flexible cables may be used.

COPYRIGHT

521.10 Installation of cables

521.10.1 Non-sheathed cables for fixed wiring shall be enclosed in conduit, ducting or trunking. This requirement does not apply to a protective conductor complying with Section 543.

Non-sheathed cables are permitted if the cable trunking system provides at least the degree of protection IPXXD or IP4X, and if the cover can only be removed by means of a tool or a deliberate action.

522 Selection and erection of wiring systems in relation to external influences

The installation method selected shall be such that protection against the expected external influences is ensured in all appropriate parts of the wiring system. Particular care shall be taken at changes in direction and where wiring enters into equipment.

NOTE – The external influences categorised in Appendix 5(L) which are of significance to wiring systems are included in this section.

522.1 Ambient temperature (AA)

522.1.1 A wiring system shall be selected and erected so as to be suitable for the highest and the lowest local ambient temperatures and to ensure that the limiting temperature in normal operation (see Table 52.1L) and the limiting temperature in case of a fault (see Table 43.1) will not be exceeded.

522.1.2 Wiring system components, including cables and wiring accessories, shall only be installed or handled at temperatures within the limits stated in the relevant product specification or as given by the manufacturer.

522.2 External heat sources

522.2.1 In order to avoid the effects of heat from external sources, one or more of the following methods or an equally effective method shall be used to protect a wiring system:

(i) Shielding

(ii) Placing sufficiently far from the source of heat

(iii) Selecting a system with due regard for the additional temperature rise which may occur

(iv) Local reinforcement or substitution of insulating material.

NOTE – Heat from external sources may be radiated, conducted or convected, e.g.

- from hot water systems
- from plant, appliances and luminaires
- from a manufacturing process
- through heat conducting materials
- from solar gain of the wiring system or its surrounding medium.

522.2.201 Parts of a cable within an accessory, appliance or luminaire shall be suitable for the temperatures likely to be encountered, as determined in accordance with 522.1.1, or shall be provided with additional insulation suitable for those temperatures.

COPYRIGHT

522.3 Presence of water (AD) or high humidity (AB)

522.3.1 A wiring system shall be selected and erected so that no damage is caused by condensation or ingress of water during installation, use and maintenance. The completed wiring system shall comply with the IP degree of protection relevant to the particular location.

NOTE – Special considerations apply to wiring systems liable to frequent splashing, immersion or submersion.

522.3.2 Where water may collect or condensation may form in a wiring system, provision shall be made for its escape.

522.3.3 Where a wiring system may be subjected to waves (AD6), protection against mechanical damage shall be afforded by one or more of the methods of 522.6 to 522.8.

522.4 Presence of solid foreign bodies (AE)

522.4.1 A wiring system shall be selected and erected so as to minimise the danger arising from the ingress of solid foreign bodies. The completed wiring system shall comply with the IP degree of protection relevant to the particular location.

522.4.2 In a location where dust in significant quantity is present (AE4), additional precautions shall be taken to prevent the accumulation of dust or other substances in quantities which could adversely affect the heat dissipation from the wiring system.

NOTE – A wiring system which facilitates the removal of dust may be necessary (see Section 529).

522.5 Presence of corrosive or polluting substances (AF)

522.5.1 Where the presence of corrosive or polluting substances, including water, is likely to give rise to corrosion or deterioration, parts of the wiring system likely to be affected shall be suitably protected or manufactured from a material resistant to such substances.

NOTE – Suitable protection for application during erection may include protective tapes, paints or grease.

522.5.2 Dissimilar metals liable to initiate electrolytic action shall not be placed in contact with each other, unless special arrangements are made to avoid the consequences of such contact.

522.5.3 Materials liable to cause mutual or individual deterioration or hazardous degradation shall not be placed in contact with each other.

522.6L Impact (AG), including concealed wiring

522.6.1 Wiring systems shall be selected and erected so as to minimise the damage arising from mechanical stress, e.g. by impact, abrasion, penetration, tension or compression during installation, use or maintenance.

522.6.2 In a fixed installation where impacts of medium severity (AG2) or high severity (AG3) can occur protection shall be afforded by:

(i) the mechanical characteristics of the wiring system, or

(ii) the location selected, or

(iii) the provision of additional local or general protection against mechanical damage, or

(iv) any combination of the above.

NOTE – Examples are areas where the floor is likely to be penetrated and areas used by forklift trucks.

COPYRIGHT

522.6.3 Reserved for future use

522.6.4 The degree of protection of electrical equipment shall be maintained after installation of the cables and conductors.

522.6.201 A cable installed under a floor or above a ceiling shall be run in such a position that it is not liable to be damaged by contact with the floor or ceiling or their fixings.

A cable passing through a joist within a floor or ceiling construction or through a ceiling support (e.g. under floorboards), shall:

(i) be installed at least 50 mm measured vertically from the top, or bottom as appropriate, of the joist or batten, or

(ii) comply with 522.6.204L.

522.6.202L A cable installed in a wall or partition at a depth of less than 50 mm from a surface of the wall or partition shall:

(i) be a metallic sheathed and insulated cable or a non-sheathed insulated cable provided with a metallic conduit or trunking for mechanical protection, and

(ii) be provided with additional protection by means of an RCCB having the characteristics specified in 415.1.1L, and

(iii) be installed in a zone within 150 mm from the top of the wall or partition or within 150 mm of an angle formed by two adjoining walls or partitions. Where the cable is connected to a point, accessory or switchgear on any surface of the wall or partition, the cable may be installed in a zone either horizontally or vertically, to the point, accessory or switchgear. Where the location of the accessory, point or switchgear can be determined from the reverse side, a zone formed on one side of a wall of 100 mm thickness or less or partition of 100 mm thickness or less extends to the reverse side, and

(iv) shall comply with 522.6.204L.

522.6.203L A cable installed in a wall or partition at a depth of 50 mm or more from a surface of the wall or partition shall:

(i) be a sheathed and insulated cable, and

(ii) be provided with additional protection by means of an RCCB having the characteristics specified in 415.1.1L, and

(iii) shall comply with 522.6.204L.

522.6.204L For the purposes of 522.6.201(ii), 522.6.202L(iv) and 522.6.203L(iii), a cable shall:

(i) incorporate an earthed metallic covering which complies with the requirements of these clauses for the circuit concerned, the cable complying with BS 5467, BS 6724, BS 7846, BS 8436 or IEC 60702-1, or

(ii) be installed in earthed conduit complying with IEC 61386-21, or

(iii) be enclosed in earthed trunking or ducting complying with IEC 61084-2-1, or

(iv) be provided with mechanical protection against damage sufficient to prevent penetration of the cable by nails, screws and the like.

COPYRIGHT

522.7 Vibration (AH)

522.7.1 A wiring system supported by or fixed to a structure or equipment subject to vibration of medium severity (AH2) or high severity (AH3) shall be suitable for such conditions, particularly where cables and cable connections are concerned.

522.7.2 For the fixed installation of suspended current-using equipment, e.g. luminaires, connection shall be made by cable with flexible cores. Where no vibration or movement can be expected, cable with non-flexible cores may be used.

522.8 Other mechanical stresses (AJ)

522.8.1 A wiring system shall be selected and erected to avoid during installation, use or maintenance, damage to the sheath or insulation of cables and their terminations. The use of any lubricants that can have a detrimental effect on the cable or wiring system are not permitted.

522.8.2 Where buried in the structure, a conduit system or cable ducting system, other than a pre-wired conduit assembly specifically designed for the installation, shall be completely erected between access points before any cable is drawn in.

522.8.3 The radius of every bend in a wiring system shall be such that conductors or cables do not suffer damage and terminations are not stressed.

522.8.4 Where the conductors or cables are not supported continuously due to the method of installation, they shall be supported by suitable means at appropriate intervals in such a manner that the conductors or cables do not suffer damage by their own weight.

522.8.5 Every cable or conductor shall be supported in such a way that it is not exposed to undue mechanical strain and so that there is no appreciable mechanical strain on the terminations of the conductors, account being taken of mechanical strain imposed by the supported weight of the cable or conductor itself.

522.8.6 A wiring system intended for the drawing in or out of conductors or cables shall have adequate means of access to allow this operation.

522.8.7 A wiring system buried in a floor shall be sufficiently protected to prevent damage caused by the intended use of the floor.

522.8.8 Reserved for future use

522.8.9 Reserved for future use

522.8.10 Except where installed in a conduit or duct which provides equivalent protection against mechanical damage, a cable buried in the ground shall incorporate an earthed armour or metal sheath or both, suitable for use as a protective conductor. The location of buried cables shall be marked by cable covers or a suitable marking tape. Buried conduits and ducts shall be suitably identified. Buried cables, conduits and ducts shall be at a sufficient depth to avoid being damaged by any reasonably foreseeable disturbance of the ground.

NOTE – IEC 61386-24 is the standard for underground conduits.

522.8.11 Cable supports and enclosures shall not have sharp edges liable to damage the wiring system.

522.8.12 A cable or conductors shall not be damaged by the means of fixing.

COPYRIGHT

522.8.13 Cables, busbars and other electrical conductors which pass across expansion joints shall be so selected or erected that anticipated movement does not cause damage to the electrical equipment.

522.8.14 No wiring system shall penetrate an element of building construction which is intended to be load bearing unless the integrity of the load-bearing element can be assured after such penetration.

522.9 Presence of flora and/or mould growth (AK)

522.9.1 Where the conditions experienced or expected constitute a hazard (AK2), the wiring system shall be selected accordingly or special protective measures shall be adopted.

NOTE 1 – An installation method which facilitates the removal of such growths may be necessary (see Section 529)

NOTE 2 – Possible preventive measures are closed types of installation (conduit or channel), maintaining distances to plants and regular cleaning of the relevant wiring system.

522.10 Presence of fauna (AL)

522.10.1 Where conditions experienced or expected constitute a hazard (AL2), the wiring system shall be selected accordingly or special protective measures shall be adopted, for example, by:

(i) the mechanical characteristics of the wiring system, or

(ii) the location selected, or

(iii) the provision of additional local or general protection against mechanical damage, or

(iv) any combination of the above.

522.11 Solar radiation (AN) and ultraviolet radiation

522.11.1 Where significant solar radiation (AN2) or ultraviolet radiation is experienced or expected, a wiring system suitable for the conditions shall be selected and erected or adequate shielding shall be provided. Special precautions may need to be taken for equipment subject to ionising radiation.

NOTE – See also 522.2.1 dealing with temperature rise.

522.12 Seismic effects (AP)

522.12.1 The wiring system shall be selected and erected with due regard to the seismic hazards of the location of the installation.

522.12.2 Where the seismic hazards experienced are low severity (AP2) or higher, particular attention shall be paid to the following:

(i) The fixing of wiring systems to the building structure

(ii) The connections between the fixed wiring and all items of essential equipment, e.g. safety services, shall be selected for their flexible quality.

522.13 Movement of air (AR)

522.13.1 See 522.7, Vibration (AH), and 522.8, Other mechanical stresses (AJ).

COPYRIGHT

522.14 Nature of processed or stored materials (BE)

522.14.1 See Section 527, Selection and erection of wiring systems to minimise the spread of fire and Section 422, Precautions where particular risks of fire exist.

522.15 Building design (CB)

522.15.1 Where risks due to structural movement exist (CB3), the cable support and protection system employed shall be capable of permitting relative movement so that conductors and cables are not subjected to excessive mechanical stress.

522.15.2 For a flexible structure or a structure intended to move (CB4), a flexible wiring system shall be used.

523 Current-carrying capacities of cables

523.1 The current, including any harmonic current, to be carried by any conductor for sustained periods during normal operation shall be such that the appropriate temperature limit specified in Table 52.1L is not exceeded. The value of current shall be selected in accordance with 523.2L, or determined in accordance with 523.3.

Table 52.1L – Maximum operating temperatures for types of cable insulation Type of insulation

Type of insulation	Temperature limit[a]
Thermoplastic	70 °C at the conductor
Thermosetting	90 °C at the conductor [b]
Mineral (Thermoplastic covered or bare exposed to touch)	70 °C at the sheath
Mineral (bare not exposed to touch and not in contact with combustible material)	105 °C at the sheath [b, c]
[a] The maximum permissible conductor temperatures given in Table 52.1L on which the tabulated current-carrying capacities given in Appendix 4(L) are based, have been taken from IEC 60502-1 and IEC 60702-1 and are shown on these tables in Appendix 4(L). [b] Where a conductor operates at a temperature exceeding 70 °C it shall be ascertained that the equipment connected to the conductor is suitable for the resulting temperature at the connection. [c] For mineral insulated cables, higher operating temperatures may be permissible dependent upon the temperature rating of the cable, its terminations, the environmental conditions and other external influences.	
NOTE – For the temperature limits for other types of insulation, refer to cable specification or manufacturer.	

523.2L The requirement of 523.1 is considered to be satisfied if the current for non-sheathed and sheathed cables does not exceed the appropriate values selected from the tables of current-carrying capacity given in Appendix 4(L) with reference to Table 4A, subject to any necessary rating factors.

NOTE – The current-carrying capacities given in the tables are provided for guidance. It is recognised that there will be some tolerance in the current-carrying capacities depending on the environmental conditions and the precise construction of the cables.

COPYRIGHT

523.3 The appropriate value of current-carrying capacity may also be determined as described in relevant part of the IEC 60287 series, or by test, or by calculation using a recognised method, provided that the method is stated. Where appropriate, account shall be taken of the characteristics of the load and, for buried cables, the effective thermal resistance of the soil.

523.4 The ambient temperature shall be considered to be the temperature of the surrounding medium when the non-sheathed or sheathed cable(s) under consideration are not loaded.

523.5L Groups containing more than one circuit

The group rating factors, see Tables 4C1 and 4C2 of Appendix 4(L), are applicable to groups of non-sheathed or sheathed cables having the same maximum operating temperature.

For groups containing non-sheathed or sheathed cables having different maximum operating temperatures, the current-carrying capacity of all the non-sheathed or sheathed cables in the group shall be based on the lowest maximum operating temperature of any cable in the group together with the appropriate group rating factor.

If, due to known operating conditions, a non-sheathed or sheathed cable is expected to carry a current not greater than 30% of its grouped current-carrying capacity, it may be ignored for the purpose of obtaining the rating factor for the rest of the group.

523.6 Number of loaded conductors

523.6.1 The number of conductors to be considered in a circuit are those carrying load current. Where conductors in polyphase circuits carry balanced currents, the associated neutral conductor need not be taken into consideration. Under these conditions a four-core cable is given the same current-carrying capacity as a three-core cable having the same conductor cross-sectional area for each line conductor. The neutral conductor shall be considered as a loaded conductor in the case of the presence of third harmonic current or multiples of the third harmonic presenting a total harmonic distortion greater than 15% of the fundamental line current.

523.6.2 Where the neutral conductor in a multicore cable carries current as a result of an imbalance in the line currents, the temperature rise due to the neutral current is offset by the reduction in the heat generated by one or more of the line conductors. In this case the conductor size shall be chosen on the basis of the highest line current.
In all cases the neutral conductor shall have a cross-sectional area adequate to afford compliance with 523.1.

523.6.3L Where the neutral conductor carries current without a corresponding reduction in load of the line conductors, the neutral conductor shall be taken into account in ascertaining the current-carrying capacity of the circuit. Such currents may be caused by a significant harmonic current in three-phase circuits. If the total harmonic distortion due to third harmonic current or multiples of the third harmonic is greater than 15% of the fundamental line current the neutral conductor shall not be smaller than the line conductors. Thermal effects due to the presence of third harmonic or multiples of third harmonic currents and the corresponding rating factors for higher harmonic currents are given in Appendix 4(L), Sections 6.5 and 6.6.

523.6.4L Conductors which serve the purpose of protective conductors only are not to be taken into consideration.

523.6.201L The tabulated current-carrying capacities in Appendix 4(L) are based on the fundamental frequency only and do not take account of the effect of harmonics.

COPYRIGHT

523.7L Conductors in parallel

Where two or more live conductors are connected in parallel in a system, either:

(i) measures shall be taken to achieve equal load current sharing between them

This requirement is considered to be fulfilled if the conductors are of the same material, have the same cross-sectional area, are approximately the same length and have no branch circuits along their length, and either:

(a) the conductors in parallel are multicore cables or twisted single-core cables or non-sheathed cables, or

(b) the conductors in parallel are non-twisted single-core cables or non-sheathed cables in trefoil or flat formation and where the cross-sectional area is greater than 50 mm^2 in copper or 70 mm^2 in aluminium, the special configuration necessary for such formations is adopted. These configurations consist of suitable groupings and spacings of the different lines or poles, or

(ii) special consideration shall be given to the load current sharing to meet the requirements of 523.1.

This clause does not preclude the use of ring final circuits with or without spur connections.

Where adequate current sharing is not possible or where four or more conductors have to be connected in parallel consideration shall be given to the use of busbar trunking.

523.8 Variation of installation conditions along a route

Where the heat dissipation differs from one part of a route to another, the current-carrying capacity at each part of the route shall be appropriate for that part of the route.

523.9L Cables in thermal insulation

A cable should preferably not be installed in a location where it is liable to be covered by thermal insulation. Where a cable is to be run in a space to which thermal insulation is likely to be applied it shall, wherever practicable, be fixed in a position such that it will not be covered by the thermal insulation. Where fixing in such a position is impracticable the cross-sectional area of the cable shall be selected to meet the requirements of Chapter 43. Where necessary, the nature of the load (e.g. cyclic) and diversity shall be taken into account.

For a cable installed in a thermally insulated wall or above a thermally insulated ceiling, the cable being in contact with a thermally conductive surface on one side, current-carrying capacities are tabulated in Appendix 4(L).

For a single cable likely to be totally surrounded by thermally insulating material over a length of 0.5 m or more, the current-carrying capacity shall be taken, in the absence of more precise information, as 0.5 times the current- carrying capacity for that cable clipped direct to a surface and open (Reference Method C).

Where a cable is to be totally surrounded by thermal insulation for less than 0.5 m the current-carrying capacity of the cable shall be reduced appropriately depending on the size of cable, length in insulation and thermal properties of the insulation. The derating factors in Table 52.2 are appropriate to conductor sizes up to 10 mm^2 in thermal insulation having a thermal conductivity (λ) greater than 0.04 $Wm^{-1}K^{-1}$.

COPYRIGHT

Table 52.2 – Cable surrounded by thermal insulation

Length in insulation (mm)	Derating factor
50	0.88
100	0.78
200	0.63
400	0.51

523.201 Armoured single-core cables

The metallic sheaths and/or non-magnetic armour of single-core cables in the same circuit shall normally be bonded together at both ends of their run (solid bonding). Alternatively, the sheaths or armour of such cables having conductors of cross-sectional area exceeding 50 mm² and a non-conducting outer sheath may be bonded together at one point in their run (single point bonding) with suitable insulation at the unbonded ends, in which case the length of the cables from the bonding point shall be limited so that voltages from sheaths and/or armour to earth:

(i) do not cause corrosion when the cables are carrying their full load current, for example by limiting the voltage to 25 V, and

(ii) do not cause danger or damage to property when the cables are carrying short-circuit current.

524 Cross-sectional areas of conductors

524.1 The cross-sectional area of each conductor in a circuit shall be not less than the values given in Table 52.3, except as provided for extra-low voltage lighting installations according to 715.524.201.

524.2 Neutral conductors

524.2.1 The neutral conductor, if any, shall have a cross-sectional area not less than that of the line conductor:

(i) in single-phase, two-wire circuits, whatever the cross-sectional area

(ii) in polyphase and single-phase three-wire circuits, where the size of the line conductors is less than or equal to 16 mm² for copper

(iii) in circuits where it is required according to 523.6.3L.

524.2.2L If the total harmonic content due to triplen harmonics is greater than 33% of the fundamental line current, an increase in the cross-sectional area of the neutral conductor may be required. See 523.6.3L and Appendix 4(L), Sections 6.5 and 6.6.

524.2.3L For a polyphase circuit where each line conductor has a cross-sectional area greater than 16 mm² for copper, the neutral conductor is permitted to have a smaller cross-sectional area than that of the line conductors providing the following conditions are simultaneously fulfilled:

(i) The expected maximum current including harmonics, if any, in the neutral conductor during normal service is not greater than the current-carrying capacity of the reduced cross-sectional area of the neutral conductor, and

NOTE – The load carried by the circuit under normal service conditions should be practically equally distributed between the lines.

COPYRIGHT

(ii) the neutral conductor is protected against overcurrents according to 431.2, and

(iii) the size of the neutral conductor is at least equal to 16 mm^2 for copper or, account being taken of 523.6.3L.

Table 52.3 – Minimum cross-sectional area of conductors

Type of wiring system	Use of the circuit	Conductor	
		Material	Cross-sectional area mm^2
Non-sheathed and sheathed cables	Lighting circuits	Copper	1.0
	Power circuits	Copper	1.5
	Signalling and control circuits	Copper	0.5 (see NOTE 1)
Bare conductors	Power circuits	Copper	10
	Signalling and control circuits	Copper	4
Non-sheathed and sheathed flexible cables	For a specific appliance	Copper	As specified in the product standard
	For any other application		0.75 [a]
	Extra-low voltage circuits for special applications (see NOTE 2)		0.75
NOTE 1 – In information technology, signalling and control circuits intended for electronic equipment a minimum cross-sectional area of 0.1 mm2 is permitted. NOTE 2 – For special requirements for ELV lighting see Section 559. NOTE 3 – Connectors used to terminate aluminium conductors shall be tested and approved for this specific use			
[a] In multicore flexible cables containing seven or more cores, NOTE 1 applies.			

525 Voltage drop in consumers' installations

525.1 In the absence of any other consideration, under normal service conditions the voltage at the terminals of any fixed current-using equipment shall be greater than the lower limit corresponding to the product standard relevant to the equipment.

525.201 Where the fixed current-using equipment concerned is not the subject of a product standard, the voltage at the terminals shall be such as not to impair the safe functioning of that equipment.

525.202L The above requirements are deemed to be satisfied for a supply if the voltage drop between the origin of the installation (usually the supply terminals) and a socket-outlet or the terminals of the fixed current-using equipment does not exceed 4% of the nominal voltage of the supply.

525.203 A greater voltage drop may be accepted for a motor during starting periods and for other equipment with high inrush currents provided that it is verified that the voltage variations are within the limits specified in the relevant product standard for the equipment or, in the absence of a product standard, in accordance with the manufacturer's recommendations.

526 Electrical connections

526.1 Every connection between conductors or between a conductor and other equipment shall provide durable electrical continuity and adequate mechanical strength and protection.

NOTE – See 522.8 – Other mechanical stresses.

COPYRIGHT

526.2L The selection of the means of connection shall take account of, as appropriate:

(i) the material of the conductor and its insulation

(ii) the number and shape of the wires forming the conductor

(iii) the cross-sectional area of the conductor

(iv) the number of conductors to be connected together

(v) the temperature attained at the terminals in normal service such that the effectiveness of the insulation of the conductors connected to them is not impaired

(vi) the provision of adequate locking arrangements in situations subject to vibration or thermal cycling.

Where a soldered connection is used the design shall take account of creep, mechanical stress and temperature rise under fault conditions.

NOTE 1 – Applicable standards include IEC 60947-7, the IEC 60998 series and IEC 61535.

NOTE 2 – Terminals without the marking R (only rigid conductor), F (only flexible conductor), S or Sol (only solid conductor) are suitable for the connection of all types of conductors.

NOTE 3 – Final lighting and power circuits (including distribution circuits) for electrical equipment, e.g. heaters, fan coil units etc., shall be as far as possible continuous without any cable joints, and erected in compliance with 521.10.1.

526.3L Every connection shall be accessible for inspection, testing and maintenance, except for the following:

(i) A joint designed to be buried in the ground

(ii) A compound-filled or encapsulated joint

(iii) A connection between a cold tail and the heating element as in ceiling heating, floor heating or a trace heating system

(iv) A joint made by welding, soldering, brazing or appropriate compression tool

(v) Joints or connections made in equipment by the manufacturer of the product and not intended to be inspected or maintained

(vi) Equipment complying with SS 241 for a maintenance-free accessory and marked with the symbol MF and installed in accordance with the manufacturer's instructions.

526.4 Where necessary, precautions shall be taken so that the temperature attained by a connection in normal service shall not impair the effectiveness of the insulation of the conductors connected to it or any insulating material used to support the connection. Where a cable is to be connected to a bare conductor or busbar its type of insulation and/or sheath shall be suitable for the maximum operating temperature of the bare conductor or busbar.

526.5L Every termination and joint in a live conductor or a PE conductor shall be made within one of the following or a combination thereof:

(i) A suitable accessory complying with the appropriate product standard

(ii) An equipment enclosure complying with the appropriate product standard

COPYRIGHT

(iii) An enclosure partially formed or completed with building material which is non-combustible when tested to BS 476-4.

NOTE – Care shall be taken to prevent improper jointing of cables, for example, cables shall not be connected by twisting the core wires together manually and insulating the joints made with electrical tapes.

526.6 There shall be no appreciable mechanical strain on the connections of conductors.

526.7 Where a connection is made in an enclosure the enclosure shall provide adequate mechanical protection and protection against relevant external influences.

526.8 Cores of sheathed cables from which the sheath has been removed and non-sheathed cables at the termination of conduit, ducting or trunking shall be enclosed as required by 526.5.

526.9 Connection of multiwire, fine wire and very fine wire conductors

526.9.1 In order to avoid inappropriate separation or spreading of individual wires of multiwire, fine wire or very fine wire conductors, suitable terminals shall be used or the conductor ends shall be suitably treated.

526.9.2 Soldering (tinning) of the whole conductor end of multiwire, fine wire and very fine wire conductors is not permitted if screw terminals are used.

526.9.3 Soldered (tinned) conductor ends on fine wire and very fine wire conductors are not permissible at connection and junction points which are subject in service to a relative movement between the soldered and the non-soldered part of the conductor.

527 Selection and erection of wiring systems to minimise the spread of fire

527.1 Precautions within a fire-segregated compartment

527.1.1 The risk of spread of fire shall be minimised by the selection of appropriate materials and erection in accordance with Section 527.

527.1.2 A wiring system shall be installed so that the general building structural performance and fire safety are not reduced.

527.1.3 Cables complying with, at least, the requirements of IEC 60332-1-2 may be installed without special precautions.

In installations where particular risk is identified, cables shall meet the flame propagation requirements given in the relevant part of the IEC 60332-3 series.

527.1.4 Cables not complying with the flame propagation requirements of IEC 60332-1-2 shall be limited to short lengths for connection of appliances to the permanent wiring system and shall not pass from one fire- segregated compartment to another.

527.1.5 Products having the necessary resistance to flame propagation as specified in the IEC 61386 series, the appropriate part of IEC 61084 series, IEC 61439-6, IEC 61534 series, IEC 61537 or IEC 60570 may be installed without special precautions. Other products complying with standards having similar requirements for resistance to flame propagation may be installed without special precautions.

527.1.6 Parts of wiring systems other than cables which do not comply, as a minimum, with the flame propagation requirements as specified in the IEC 61386 series, the appropriate part of IEC 61084 series, IEC 61439-6, IEC 61534 series or IEC 61537 but which comply in all other respects with the requirements of their respective product standard shall, if used, be completely enclosed in suitable non-combustible building materials.

COPYRIGHT

527.2 Sealing of wiring system penetrations

527.2.1 Where a wiring system passes through elements of building construction such as floors, walls, roofs, ceilings, partitions or cavity barriers, the openings remaining after passage of the wiring system shall be sealed according to the degree of fire-resistance (if any) prescribed for the respective element of building construction before penetration.

This requirement is satisfied if the sealing of the wiring system concerned has passed a relevant type test meeting the requirements of 527.2.3.

527.2.1.1 During the erection of a wiring system temporary sealing arrangements shall be provided as appropriate.

527.2.1.2 During alteration work, sealing which has been disturbed shall be reinstated as soon as practicable.

527.2.2 A wiring system such as a conduit system, cable ducting system, cable trunking system, busbar or busbar trunking system which penetrates elements of building construction having specified fire-resistance shall be internally sealed to the degree of fire-resistance of the respective element before penetration as well as being externally sealed as required by 527.2.1.

This requirement is satisfied if the sealing of the wiring system concerned has passed a relevant type test meeting the requirements of 527.2.3.

527.2.3 A conduit system, cable trunking system or cable ducting system classified as non-flame propagating according to the relevant product standard and having a maximum internal cross-sectional area of 710 mm^2 need not be internally sealed provided that:

(i) the system satisfies the test of IEC 60529 for IP33, and

(ii) any termination of the system in one of the compartments, separated by the building construction being penetrated, satisfies the test of IEC 60529 for IP33.

527.2.4 Any sealing arrangement intended to satisfy 527.2.1 or 527.2.1.1 shall resist external influences to the same degree as the wiring system with which it is used and, in addition, it shall meet all of the following requirements:

(i) It shall be resistant to the products of combustion to the same extent as the elements of building construction which have been penetrated

(ii) It shall provide the same degree of protection from water penetration as that required for the building construction element in which it has been installed

(iii) It shall be compatible with the material of the wiring system with which it is in contact

(iv) It shall permit thermal movement of the wiring system without reduction of the sealing quality

(v) It shall be of adequate mechanical stability to withstand the stresses which may arise through damage to the support of the wiring system due to fire.

The seal and the wiring system shall be protected from dripping water which may travel along the wiring system or which may otherwise collect around the seal unless the materials used in the seal are all resistant to moisture when finally assembled for use.

COPYRIGHT

NOTE – This clause may be satisfied if:

- either cable cleats, cable ties or cable supports are installed within 750 mm of the seal, and are able to withstand the mechanical loads expected following the collapse of the supports on the fire side of the seal to the extent that no strain is transferred to the seal, or
- the design of the sealing system itself provides adequate support.

528 Proximity of wiring systems to other services

528.1 Proximity to electrical services

528.1.1 Except where one of the following methods is adopted, neither a voltage Band I nor a voltage Band II circuit shall be contained in the same wiring system as a circuit of nominal voltage exceeding that of low voltage, and a Band I circuit shall not be contained in the same wiring system as a Band II circuit:

(i) Every cable or conductor is insulated for the highest voltage present

(ii) Each conductor of a multicore cable is insulated for the highest voltage present in the cable

(iii) The cables are insulated for their system voltage and installed in a separate compartment of a cable ducting or cable trunking system

(iv) The cables are installed on a cable tray system where physical separation is provided by a partition

(v) A separate conduit, trunking or ducting system is employed

(vi) For a multicore cable, the cores of the Band I circuit are separated from the cores of the Band II circuit by an earthed metal screen of equivalent current-carrying capacity to that of the largest core of a Band II circuit.

For SELV and PELV systems the requirements of 414.4 shall apply.

NOTE 1 – In the case of proximity of wiring systems and lightning protection systems, IEC 62305 series should be considered.

NOTE 2 – Requirements for separation and segregation in relation to safety services are given in SS CP 10 and SS 563 series.

528.1.2L Fire alarm and emergency lighting circuits shall be segregated from all other cables and from each other in accordance with SS CP 10 and SS 563 series. Telecommunication circuits shall be segregated in accordance with the Code of Practice for Info-communication Facilities in Buildings as appropriate.

528.2 Proximity of communications cables

In the event of crossing or proximity of underground telecommunication cables and underground power cables, a minimum clearance of 100 mm shall be maintained, or the requirements according to (i) or (ii) shall be fulfilled:

(i) A fire-retardant partition shall be provided between the cables, e.g. bricks, cable protecting caps (clay, concrete), shaped blocks (concrete), protective cable conduit or troughs made of fire-retardant materials

(ii) For crossings, mechanical protection between the cables shall be provided, e.g. cable conduit, concrete cable protecting caps or shaped blocks.

COPYRIGHT

NOTE 1 – Special considerations of electrical interference, both electromagnetic and electrostatic, may apply to telecommunication circuits, data transfer circuits and the like.

NOTE 2 – Segregation requirements for communications services are given in the Code of Practice for Info-communication Facilities in Buildings.

528.3 Proximity to non-electrical services

528.3.1 A wiring system shall not be installed in the vicinity of services which produce heat, smoke or fumes likely to be detrimental to the wiring, unless it is protected from harmful effects by shielding arranged so as not to affect the dissipation of heat from the wiring.

In areas not specifically designed for the installation of cables, e.g. service shafts and cavities, the cables shall be laid so that they are not exposed to any harmful influence by the normal operation of the adjacent installations (e.g. gas, water or steam lines).

528.3.2 Where a wiring system is routed below services liable to cause condensation (such as water, steam or gas services), precautions shall be taken to protect the wiring system from deleterious effects.

528.3.3 Where an electrical service is to be installed in proximity to one or more non-electrical services it shall be so arranged that any foreseeable operation carried out on the other services will not cause damage to the electrical service or the converse.

NOTE – This may be achieved by:

(i) Suitable spacing between the services, or

(ii) the use of mechanical or thermal shielding.

528.3.4 Where an electrical service is located in close proximity to one or more non-electrical services, both the following conditions shall be met:

(i) The wiring system shall be suitably protected against the hazards likely to arise from the presence of the other services in normal use

(ii) Fault protection shall be afforded in accordance with the requirements of Section 411.

NOTE – The requirements for segregation between low pressure gas systems and electrical equipment are given in BS 6891.

528.3.5L No cable shall be run in a lift or hoist shaft unless it forms part of the lift installation as defined in SS 550.

529 Selection and erection of wiring systems in relation to maintainability, including cleaning

529.1 With regard to maintainability, reference shall be made to 132.12.

529.2 Where it is necessary to remove any protective measure in order to carry out maintenance, provision shall be made so that the protective measure can be reinstated without reduction of the degree of protection originally intended.

529.3 Provision shall be made for safe and adequate access to all parts of a wiring system which may require maintenance.

NOTE – In some situations, it may be necessary to provide permanent means of access by ladders, walkways, etc.

COPYRIGHT

CHAPTER 53

PROTECTION, ISOLATION, SWITCHING, CONTROL AND MONITORING

530 Introduction

530.1 Scope

This chapter provides general requirements for protection, isolation, switching, control and monitoring with the requirements for selection and erection of the devices provided to fulfill such functions, including requirements to provide compliance with measures of protection for safety.

530.2 Reserved for future use

530.3 General and common requirements

Equipment shall be selected and installed to provide for the safety and proper functioning for the intended use of the installation. Equipment installed shall be appropriate to the external influences foreseen.

530.3.1 In multiphase circuits the moving contacts of all poles of a multipole device shall be so coupled mechanically that they make and break substantially together, except:

(i) that contacts solely intended for the neutral may close before and open after the other contacts

(ii) in accordance with 543.3.3L(ii).

NOTE 1 – Switching devices, contactors, circuit-breakers, RCDs, isolating switches, control and protective switching devices for equipment (CPS), etc., complying with their relevant standard (see Table 53.4L) fulfill this requirement.

NOTE 2 – The requirement to make and break substantially together may not apply to control and auxiliary contacts.

530.3.2L Except as provided in 537.2.2.5L, in multi-phase circuits an independently operated single-pole switching device or protective device shall not be inserted in the neutral conductor. In single-phase circuits an independently operated single-pole switching or protective device shall not be inserted in the neutral conductor alone.

530.3.3L A device embodying more than one function shall comply with all the requirements of this chapter appropriate to each separate function.

Only RCCB and no other type of RCD shall be selected for use in distribution board intended for protecting one or more outgoing circuits, intended for use in residential or similar installation. The rated residual tripping current of the RCCB shall not exceed 30 mA.

NOTE 1 – Similar installation denotes utilisation by BA1 person as indicated in Appendix 5(L).

NOTE 2 – RCBO can be additionally used for protecting individual final circuit for purpose of discrimination.

530.3.4 Reserved for future use

COPYRIGHT

530.3.5L An auto-reclosing device for protection, isolation, switching or control may be installed only in an installation intended to be under the supervision of skilled or instructed persons and intended to be inspected and tested by skilled or instructed persons.

An auto-reclosing device shall not be used to meet the requirements of 411.3.3L, 415.1, 522.6.202L or 522.6.203L unless the device is of a type that automatically verifies the insulation resistance in the part of the installation it controls is satisfactory before the device recloses.

An auto-reclosing device shall be of a type that satisfies all the following requirements:

(i) The automatic reclose function of the device cannot be engaged after the device is manually switched to the off (or open) position

(ii) There is a time delay before the first automatic reclosure

(iii) The number of consecutive automatic reclosures is limited (to 3, for example).

A warning notice shall be clearly displayed on or near the device, indicating that no work should be carried out on the part of the installation controlled by the device unless the automatic reclose function of the device is disengaged, the device is manually switched off, and that part of the installation is securely isolated from the supply.

530.4 Reserved for future use

531 Devices for fault protection by automatic disconnection of supply

531.1 Overcurrent protective devices

531.1.1 TN-S system

In a TN-S system, overcurrent protective devices where used as devices for fault protection shall be selected and erected in order to comply with the requirements specified in Chapter 41.

531.1.2 TT system

In a TT system, overcurrent protective devices where used as devices for fault protection shall be selected and erected in order to comply with the requirements specified in Chapter 41.

531.1.3 Reserved for future use

531.2 RCDs

531.2.1 An RCD shall be capable of disconnecting all the line conductors of the circuit at the same time.

531.2.2 The magnetic circuit of the transformer of an RCD shall enclose all the live conductors of the protected circuit. The associated protective conductor shall be outside the magnetic circuit.

531.2.3 The rated residual operating current of the protective device shall comply with the requirements of Section 411 as appropriate to the type of system earthing.

531.2.4 An RCD shall be so selected and the electrical circuits so subdivided that any protective conductor current which may be expected to occur during normal operation of the connected load(s) will be unlikely to cause unnecessary tripping of the device.

COPYRIGHT

531.2.5 The use of an RCD associated with a circuit normally expected to have a protective conductor shall not be considered sufficient for fault protection if there is no such conductor, even if the rated residual operating current (I/n) of the device does not exceed 30 mA.

531.2.6 An RCD which is powered from an independent auxiliary source and which does not operate automatically in the case of failure of the auxiliary source shall be used only if one of the following conditions is fulfilled:

(i) Fault protection is maintained even in the case of failure of the auxiliary source

(ii) The device is incorporated in an installation intended to be supervised by a skilled or instructed person and inspected and tested by a skilled or instructed person.

531.2.7 An RCD shall be located so that its operation will not be impaired by magnetic fields caused by other equipment.

531.2.8 Where an RCD is used for fault protection with, but separately from, an overcurrent protective device, it shall be verified that the residual current operated device is capable of withstanding, without damage, the thermal and mechanical stresses to which it is likely to be subjected in the case of a fault occurring on the load side of the point at which it is installed.

531.2.9L Where, for compliance with the requirements of the clauses for fault protection or otherwise to prevent danger, two or more RCDs are in series, and where discrimination in their operation is necessary to prevent danger, the characteristics of the devices shall be such that the intended discrimination is achieved.

531.2.10 Where an RCD may be operated by a person other than a skilled or instructed person, it shall be designed or installed so that it is not possible to modify or adjust the setting or the calibration of its rated residual operating current ($I_{\Delta n}$) or time delay mechanism without a deliberate act involving the use of either a key or a tool and resulting in a visible indication of its setting or calibration.

531.3 RCDs in a TN-S system

531.3.1 In a TN-S system, where, for certain equipment in a certain part of the installation, the requirement of 411.4.5L cannot be satisfied, that part may be protected by an RCD.

The exposed-conductive-parts of that part of the installation shall be connected to the TN-S earthing system protective conductor or to a separate earth electrode which affords an impedance appropriate to the operating current of the RCD.

In this latter case the circuit shall be treated as a TT system and 411.5.1 to 411.5.3L apply.

531.4 RCDs in a TT system

531.4.1 If an installation which is part of a TT system is protected by a single RCD, this shall be placed at the origin of the installation unless the part of the installation between the origin and the device complies with the requirements for protection by the use of Class II equipment or equivalent insulation (see Section 412). Where there is more than one origin this requirement applies to each origin.

531.5 Reserved for future use

531.6 Insulation monitoring devices

531.6.1 An insulation monitoring device shall be so designed or installed that it shall be possible to modify the setting only by the use of a key or a tool.

COPYRIGHT

532 Devices for protection against the risk of fire

532.1L Where, in accordance with the requirements of 422.3.9L, it is necessary to limit the consequence of fault currents in a wiring system from the point of view of fire risk, the circuit shall be protected by an RCD complying with 531.2 for fault protection, and

- the RCD shall be installed at the origin of the circuit to be protected, and
- the RCD shall switch all live conductors, and
- the rated residual operating current of the RCD shall not exceed 300 mA.

NOTE 1 – For locations having a risk of explosion see IEC 60079-10, and IEC 60079-14.

NOTE 2 – The following methods which are additional to the requirements may also be employed:

- devices intended to provide protection from the effects of arc faults
- devices intended to provide protection in case of overheating
- optically operated devices that provide signalling to another device intended to break the circuit
- smoke detection devices that provide signalling to another device intended to break the circuit.

533 Devices for protection against overcurrent

533.1L General requirements

A device for protection against overcurrent shall comply with one or more of the following:

- BS 646
- BS 3036
- IEC 60269 series
- IEC 60898-1 and IEC 60898-2
- IEC 60947-2 and IEC 60947-3
- IEC 60947-4-1, IEC 60947-6-1 and IEC 60947–6-2
- SS 480
- SS 167

The use of another device is not precluded provided that its time/current characteristics provide a level of protection not less than that given by the devices listed above.

For every fuse and circuit-breaker there shall be provided on or adjacent to it an indication of its intended rated current as appropriate to the circuit it protects.

533.1.1 Fuses

533.1.1.1 A fuse base shall be arranged so as to exclude the possibility of the fuse carrier making contact between conductive parts belonging to two adjacent fuse bases.

A fuse base using screw-in fuses shall be connected so that the centre contact is connected to the conductor from the supply and the shell contact is connected to the conductor to the load.

533.1.1.2L Fuses having fuse links likely to be removed or replaced by persons other than skilled or instructed persons shall be of a type which complies with BS 3036, IEC 60269-3 or SS 167. Such a fuse link shall either:

(i) have marked on or adjacent to it an indication of the type of fuse link intended to be used, or

(ii) be of a type such that there is no possibility of inadvertent replacement by a fuse link having the intended rated current but a higher fusing factor than that intended.

COPYRIGHT

NOTE – In multiphase systems additional measures may be needed, e.g. an all-pole switch on the supply side, in order to prevent the risk of unintentional contact with live parts on the load side.

Fuses or combination units having fuse links likely to be removed and replaced only by skilled or instructed persons shall be installed in such a manner that it is ensured that the fuse links can be removed or replaced without unintentional contact with live parts.

533.1.1.3 Reserved for future use

533.1.2 Circuit-breakers

Where a circuit-breaker may be operated by a person other than a skilled or instructed person, it shall be designed or installed so that it is not possible to modify the setting or the calibration of its overcurrent release without a deliberate act involving the use of either a key or a tool and resulting in a visible indication of its setting or calibration.

Where a screw-in type circuit-breaker is used in a fuse base, the requirements of 533.1.1.1 also apply.

533.2 Selection of devices for overload protection of wiring systems

533.2.1 The rated current (or current setting) of the protective device shall be chosen in accordance with 433.1.

In certain cases, to avoid unintentional operation, the peak current values of the loads may have to be taken into consideration.

In the case of a cyclic load, the values of I_n and I_2 shall be chosen on the basis of values of I_b and I_z for the thermally equivalent constant load

where:

I_b is the current for which the circuit is designed

I_z is the continuous current-carrying capacity of the cable

I_n is the rated current of the protective device

I_2 is the current ensuring effective operation of the overload protective device within the conventional time as stated in the product standard.

533.2.2 Additional requirements for protection against overload when harmonic currents are present

When selecting an overload protective device to comply with 433.1, harmonic currents shall be taken into account in accordance with 431.2.3.

533.3 Selection of devices for protection of wiring systems against fault current

The application of the clauses of Chapter 43 shall take into account minimum and maximum fault current conditions, so as to ensure the highest energy let-through is taken into account. Where the standard covering a protective device specifies both a rated service short-circuit breaking capacity and a rated ultimate short-circuit breaking capacity, it is acceptable to select the protective device on the basis of the ultimate short-circuit breaking capacity for the maximum fault current conditions. Operational circumstances may, however, make it desirable to select the protective device on the service short-circuit breaking capacity, e.g. where a protective device is placed at the origin of the installation.

Where the short-circuit breaking capacity of the protective device is lower than the maximum prospective short- circuit or earth fault current that is expected at its point of installation, it is necessary to comply with the requirements of the last paragraph of 536.1 and 536.5.

COPYRIGHT

534 Devices for protection against overvoltage

For further information, see Appendix 16.

534.1L Scope and object

This section contains provisions for the application of voltage limitation to obtain insulation coordination in the cases described in Section 443, SS 555-4, IEC 60664-1 and IEC 61643 (DD CLC/TS 61643-12). Protection against malfunction of electrical and electronic equipment due to overvoltages is not covered in this section. Protective measures against malfunction of such equipment are detailed in the SS 555-4 and IEC 61643 (DD CLC/TS 61643-12) deal with the protection against the effects of direct lightning strokes or strokes near to the supply system. Both documents describe the selection and the application of surge protective devices (SPDs) according to the lightning protection zones (LPZ) concept. The LPZ concept describes the installation of Type 1, Type 2 and Type 3 SPDs.

SPDs, specific isolating transformers, filters or a combination of these may be used for protection against overvoltages.

These requirements are for the selection and erection of:

(i) SPDs for electrical installations of buildings to obtain a limitation of transient overvoltages of atmospheric origin transmitted via the supply distribution system and against switching overvoltages

(ii) SPDs for the protection against transient overvoltages caused by direct lightning strokes or lightning strokes in the vicinity of buildings protected by a lightning protection system.

These requirements do not take into account surge protective components which may be incorporated in the appliances connected to the installation. The presence of such components may modify the behaviour of the main surge protective device of the installation and may need an additional coordination.

These requirements also cover protection against overcurrent due to SPD failure and the consequences of that failure.

NOTE 1 – For example, failure can be due to mains supply faults or due to the SPD reaching the end of its life.

These requirements apply to a.c. power circuits.

NOTE 2 – Overvoltages of atmospheric origin and electrical switching events can affect metallic data, signal and telecommunication lines. Protection measures for these systems are detailed within CLC/TS 61643-22.

534.2 Selection and erection of surge protective devices

534.2.1L Use of SPDs

Where required by relevant part of the SS 555 series or otherwise specified, SPDs shall be installed:

(i) near the origin of an installation, or

(ii) in the main distribution assembly nearest the origin of an installation.

NOTE 1 – Annex E of DD CLC/TS 61643-12 provides examples of application of the risk analysis as described in Section 443.

COPYRIGHT

When two or more SPDs are used on the same conductor, they shall be coordinated and as such are referred to as coordinated SPDs. In accordance with SS 555-4, protection of electrical and electronic systems within structures requires coordinated SPDs.

Where required and in accordance with SS 555-4 or otherwise specified, SPDs shall be installed at the origin of an installation.

NOTE 2 – Depending on the voltage stress, Type 1 or Type 2 SPDs may be used at the origin whilst Type 2 or Type 3 are also suited for location close to the protected equipment to further protect against switching transients generated within the building.

NOTE 3 – Type 1 SPDs are often referred to as equipotential bonding SPDs and are fitted at the origin of the installation to specifically prevent dangerous sparking which could lead to fire or electric shock hazards. A lightning protection system which only employs equipotential bonding SPDs provides no effective protection against failure of sensitive electrical and electronic systems.

Additional SPDs are required to protect sensitive and critical equipment (for example hospital equipment and fire/security alarm systems). Such SPDs shall be coordinated with the SPDs installed upstream and be installed as close as practicable to the equipment to be protected. Where SPDs are required in accordance with SS 555-4, consideration shall be given to the installation of SPDs on other incoming networks (such as metallic telecommunication and signalling services).

534.2.2 Connection of SPDs

Where required by 534.2.1L, SPDs at or near the origin of the installation shall be connected between specific conductors according to Table 53.2.

Where the equipment to be protected has a sufficient overvoltage withstand or is located close to the main distribution board, one SPD assembly may be sufficient if it provides sufficient modes of protection.

NOTE 1 – Sensitive electronic equipment requires both common mode protection (conductors with respect to earth e.g. line and earth, neutral and earth) as well as differential mode protection (between live conductors, e.g. line and neutral).

The SPD assembly shall be installed as close as possible to the origin of the installation and shall have sufficient surge withstand capability for this location.

SPDs at or near the origin of the installation shall be connected at least between the following points:

(i) If there is no direct connection between the neutral conductor and protective conductor at or near the origin of the installation:

between each line conductor and either the main earthing terminal or the main protective conductor, and between the neutral conductor and either the main earthing terminal or the protective conductor, whichever route is the shorter - Connection Type 1 (CT 1), see Figure 53.1

or alternatively,

between each line conductor and the neutral conductor and between the neutral conductor and either the main earthing terminal or the protective conductor, whichever route is the shorter – Connection Type 2 (CT 2) see Figure 53.2.

NOTE 2 – If a line conductor is earthed, it is considered to be equivalent to a neutral conductor for the application of this Code.

NOTE 3 – It is recommended that the power and signalling cabling enter the structure to be protected in close proximity and are bonded together at the main earthing terminal.

COPYRIGHT

Figure 53.1 – Connection Type 1 (CT 1)

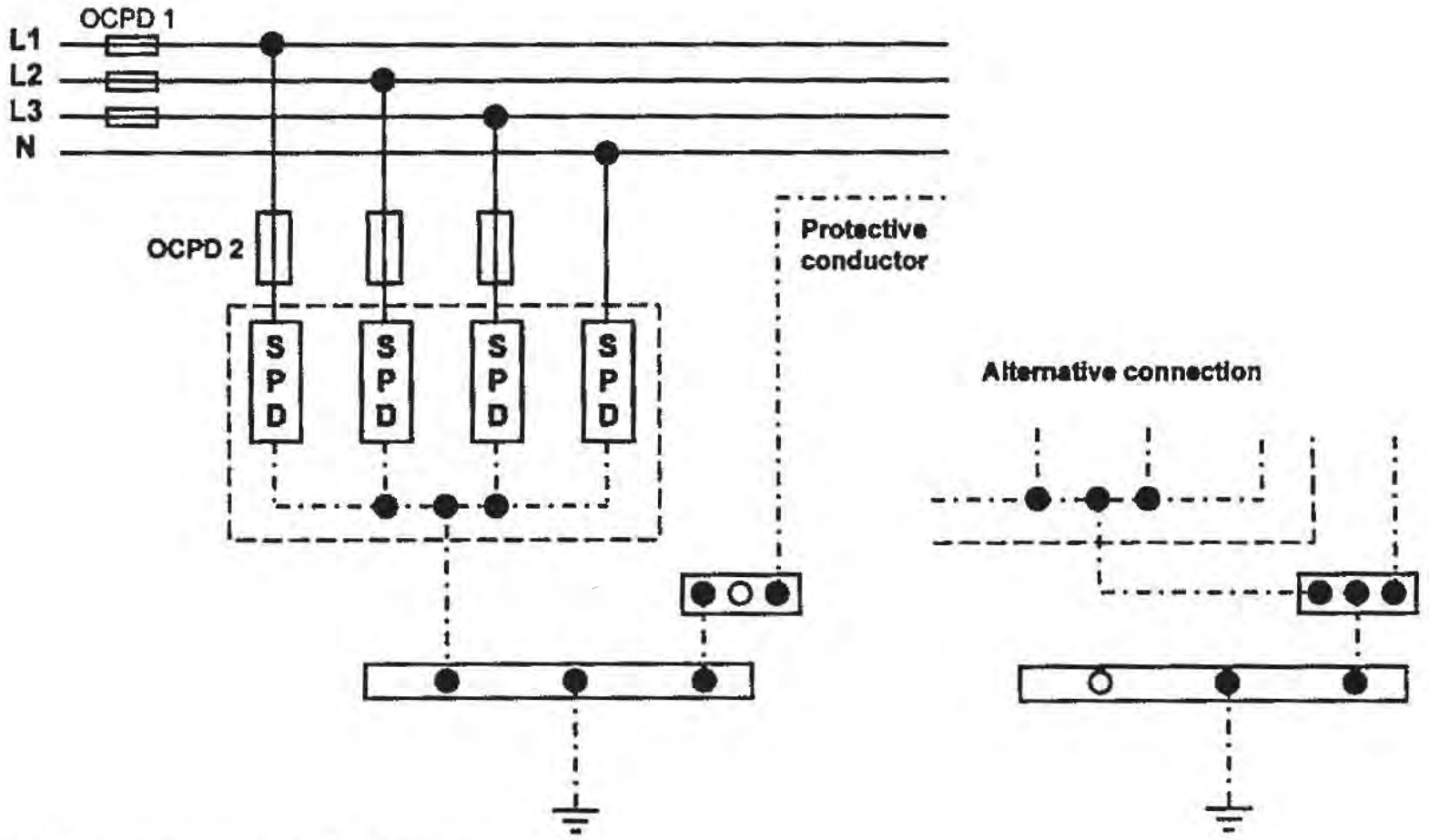

OCPD = overcurrent protective device

Figure 53.2 – Connection Type 2 (CT 2)

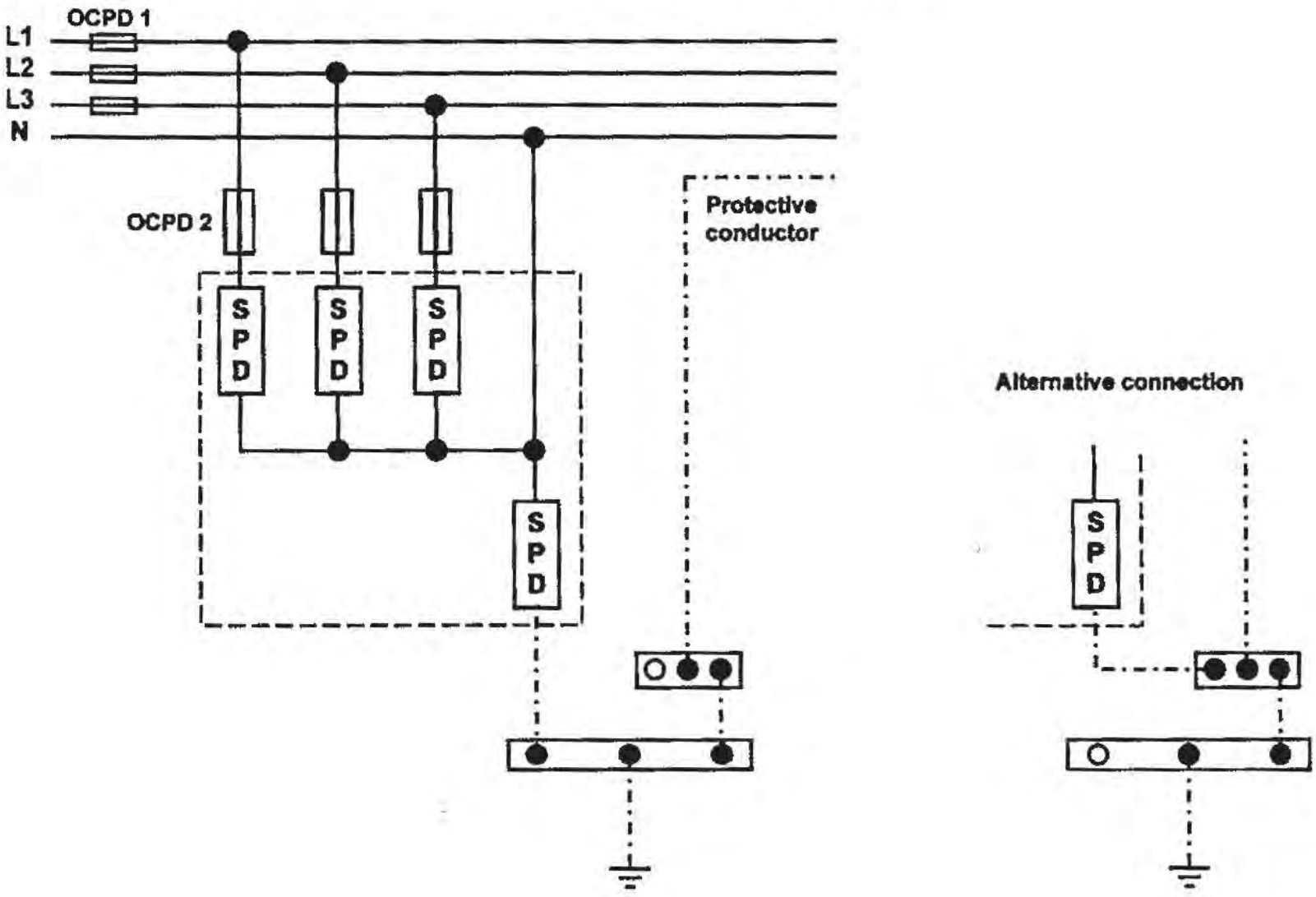

COPYRIGHT

Table 53.2(L) – Modes of protection for various LV systems

SPDs connected between:	TN-S or TT	
	Installation in accordance with	
	CT 1	CT 2
Each line conductor and neutral conductor	+	•
Each line conductor and PE conductor	•	N/A
Neutral conductor and PE conductor	•	•
Line conductors	+	+
• = SPD required, N/A = not applicable, + = optional, in addition, CT = Connection Type		
NOTE 1 – If more than one SPD is connected on the same conductor, it is necessary to ensure co-ordination between them. NOTE 2 – The number of modes of protection depends on the type of equipment to be protected (for example if the equipment is not connected to earth, line or neutral to earth protection may not be necessary), the withstand of the equipment in accordance with each mode of protection, the electrical system structure and earthing and the characteristics of the incoming surge. For example, protection between line/neutral and protective conductor or between line and neutral are generally sufficient, and protection between line and line is not used generally.		

Consideration shall be given to the installation of additional SPDs at other locations. Sensitive and critical equipment requires protection in both common and differential modes to ensure further protection against switching transients.

534.2.3 Selection of surge protective devices (SPDs)

SPDs shall be selected in accordance with the following clauses

534.2.3.1 Selection with regard to voltage protection level (U_p)

534.2.3.1.1L The impulse withstand voltage of the equipment (or impulse immunity of critical equipment) to be protected and the nominal voltage of the system shall be considered in selecting the preferred voltage protection level (U_p) value of the SPD.

SPDs shall be selected to provide a voltage protection level lower than the impulse withstand capability of the equipment or, in some cases where the continuous operation of the equipment is critical, lower than the impulse immunity of the equipment.

SPDs with lower voltage protection levels provide better protection. However, consideration shall be given to the effects of temporary overvoltages on an SPD (or built-in surge protective component) having an excessively low protection level. SPDs shall be selected which will protect equipment from failure, remain operational during surge activity and withstand most temporary overvoltage conditions.

The voltage protection level (U_p) of SPDs shall be selected in accordance with impulse withstand voltage Category II in Table 1 of IEC 60664-1. If IEC 62305-2 requires SPDs for the protection against overvoltages caused by direct lightning strokes, the protection level of these SPDs shall also be selected in accordance with impulse withstand voltage Category II in Table 1 of IEC 60664-1. In installations operating at 230/400 V, the protection level of the installed SPD shall not exceed 2.5 kV, as the SPD's connecting leads have additional inductive voltage drop across them (see 534.2.9). It may therefore be necessary to select an SPD with a lower voltage protection level.

COPYRIGHT

If the distance between the SPD and equipment to be protected (protective distance) is greater than 10 m, oscillations could lead to a voltage at the equipment terminals of up to twice the SPD's voltage protection level. Consideration shall be given to the provision of additional coordinated SPDs, closer to the equipment, or the selection of SPDs with a lower voltage protection level.

534.2.3.1.2 Where SPDs are connected as in Figure 53.2 the voltage protection level (U_p) required shall be met by the serial combination of the two SPDs between line and neutral and between neutral and the protective conductor.

Where the voltage protection level required cannot be obtained with a single SPD, additional SPDs, which are coordinated, shall be installed to ensure the required voltage protection level.

To protect sensitive and critical equipment, consideration shall be given to the installation of additional coordinated SPDs selected in accordance with impulse withstand voltage Category I (1.5 kV) in Table 1 of IEC 60664-1.

NOTE – Annex D of DD CLC/TS 61643-12 provides application examples of selecting SPDs and choice of protection level U_p.

534.2.3.2 Selection with regard to continuous operating voltage (U_c)

The maximum continuous operating voltage U_c of SPDs shall be equal to or higher than that required by Table 53.3.

Table 53.3(L) – Minimum required U_c of the SPD dependent on supply system configuration

SPDs connected between:	TN-S or TT
Line conductor and neutral conductor	1.1 $U_{\alpha.spd}$
Each line conductor and PE conductor	1.1 $U_{\alpha.spd}$
Neutral conductor and PE conductor	$U_{\alpha.spd}$ (NOTE 2)
N/A = not applicable NOTE 1 – $U_{\alpha.spd}$ is the nominal a.c. rms line voltage of the low voltage system to earth. NOTE 2 – These values are related to worst-case fault conditions, therefore the tolerance of 10 % is not taken into account.	

534.2.3.3 Selection with regard to temporary overvoltages (TOVs)

SPDs shall be selected and erected in accordance with manufacturers' instructions.

NOTE – The loss of neutral is not covered by these requirements. Although there is currently no specific test in IEC 61643-11, SPDs are expected to fail safely.

534.2.3.4 Selection with regard to nominal discharge current (I_{nspd}) and impulse current (I_{imp})

534.2.3.4.1 SPDs shall be selected according to their withstand capability, as classified in IEC 61643-11 for power systems and in IEC 61643-21 for telecommunication systems.

The nominal discharge current I_{nspd} of the SPD shall be not less than 5 kA with a waveform characteristic 8/20 for each mode of protection.

534.2.3.4.2 For Connection Type 2 (CT 2), the nominal discharge current I_{nspd} for the SPD connected between the neutral conductor and the protective conductor shall be not less than 20 kA with a waveform characteristic 8/20 for three-phase systems and 10 kA with a waveform characteristic 8/20 for single-phase systems.

COPYRIGHT

Type 1 SPDs shall be installed where a structural lightning protection system is fitted or the installation is supplied by an overhead line at risk of direct lightning strike.

The lightning impulse current I_{imp} according to IEC 61643-11 shall be calculated according to SS 555-4.

Where Type 1 SPDs are required, the value of I_{imp} shall be not less than 12.5 kA for each mode of protection, if I_{imp} cannot be calculated.

534.2.3.4.3 For Connection Type 2 (CT 2) installations, the lightning impulse current I_{imp} for the SPD connected between the neutral conductor and the protective conductor shall be calculated in accordance with SS 555-4. If the current value cannot be established, the value of I_{imp} shall be not less than 50 kA for three-phase systems and 25 kA for single-phase systems.

534.2.3.4.4 When a single SPD is used for protection according to both Section 443 and SS 555-4, the rating of I_{nspd} and of I_{imp} shall comply with the requirements of 534.2.3.4.3.

534.2.3.5 Selection with regard to the prospective fault current and the follow current interrupt rating

The short-circuit withstand of the combination SPD and overcurrent protective device (OCPD), as stated by the SPD manufacturer shall be equal to or higher than the maximum prospective fault current expected at the point of installation.

NOTE 1 – The OCPD may be either internal or external to the SPD.

When a follow current interrupt rating is declared by the manufacturer, it shall be equal to or higher than the prospective line to neutral fault current at the point of installation.

NOTE 2 – Follow current interrupt rating is only applicable to certain voltage switching devices such as spark gaps and gas discharge tubes.

SPDs connected between the neutral conductor and the protective conductor in TT or TN-S systems, which allow a power frequency follow current after operation (e.g. spark gaps) shall have a follow current interrupt rating greater than or equal to 100 A.

534.2.3.6 Co-ordination of SPDs

SPDs shall be selected and erected such as to ensure coordination in operation.

534.2.4 Protection against overcurrent and consequences of SPD's end of life

Protection against SPD short-circuits is provided by OCPDs (see Figures 53.1 and 53.2) which shall be selected according to the recommended ratings given in the manufacturer's SPD instructions.

OCPD2 may be omitted if the characteristics of OCPD1 meet the requirements given in the manufacturer's instructions.

534.2.5 Fault protection integrity

Fault protection shall remain effective in the protected installation even in case of failures of SPDs.

In TN-S systems, automatic disconnection of supply shall be obtained by correct operation of the overcurrent protective device on the supply side of the SPD.
In TT systems this shall be obtained by either:

(i) the installation of SPDs on the load side of an RCD (see Figure 16A2 in Appendix 16), or

(ii) the installation of SPDs on the supply side of an RCD (see Figure 16A3 in Appendix 16).

COPYRIGHT

Owing to the possibility of the failure of an SPD between neutral and protective conductors,

(iii) the conditions of 411.4.1L shall be met, and

(iv) the SPD shall be installed in accordance with 534.2.2, Connection Type 2 (CT 2).

534.2.6 SPD installation in conjunction with RCDs

Where SPDs are installed in accordance with 534.2.1L and are on the load side of a residual current device, an RCD having an immunity to surge currents of at least 3 kA 8/20, shall be used.

NOTE 1 – S-type RCDs satisfy this requirement.

NOTE 2 – In the case of surge current higher than 3 kA 8/20, the RCD may trip causing interruption of the power supply.

534.2.7 Reserved for future use

534.2.8 SPD status indication

Indication that the SPD no longer provides overvoltage protection shall be provided by a status indicator local to the SPD itself and/or remote, to provide electrical, visual or audible alarms.

534.2.9 Critical length of connecting conductors

To gain maximum protection the supply conductors shall be kept as short as possible, to minimise additive inductive voltage drops across the conductors. Current loops shall be avoided (see Figure 53.3). The total lead length (a + b) should preferably not exceed 0.5 m, but shall in no case exceed 1.0 m. Where an SPD is fitted in-line (see Figure 53.4), the protective conductor (length c) should not exceed 0.5 m in length, and in no case shall exceed 1.0 m.

NOTE – To keep the connections of SPDs as short and inductance as low as possible, SPDs may be connected to the main earthing terminal or to the protective conductor, e.g. via the metallic enclosures of the assembly being connected to the protective conductor.

Figure 53.3 – Example of a shunt installation of SPDs at or near the origin of the electrical installation

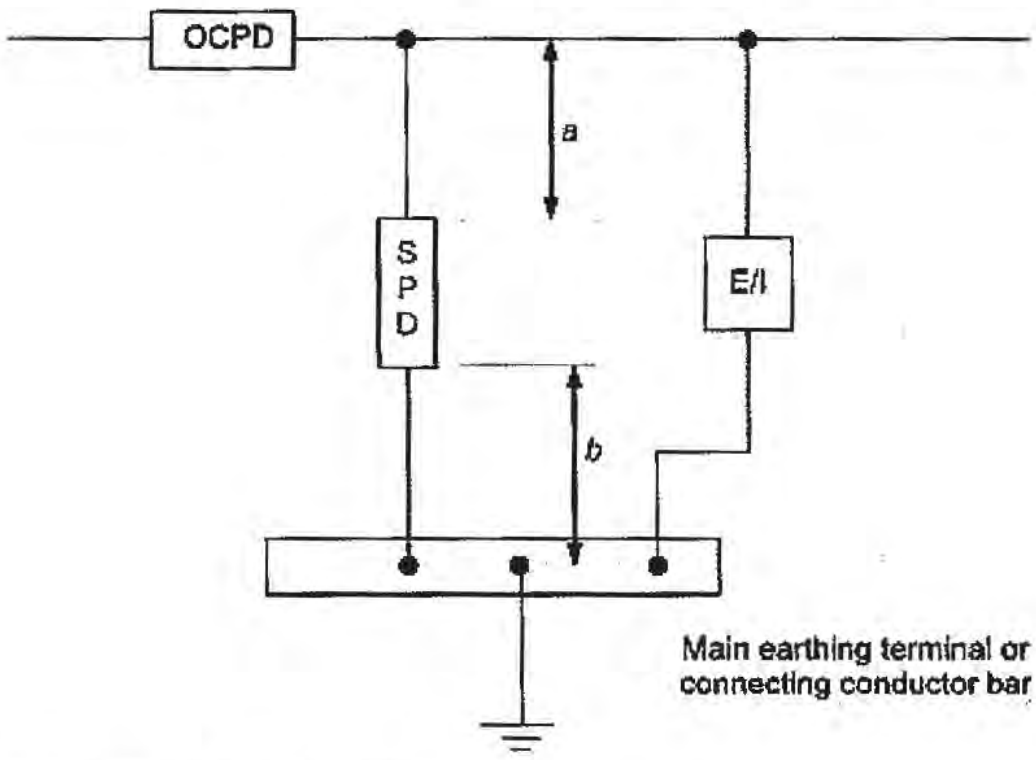

OCPD = overcurrent protective device
SPD = surge protective device
E/I = equipment or installation to be protected against overvoltages

COPYRIGHT

Figure 53.4 – Example of an in-line installation of SPDs at or near the origin of the electrical installation

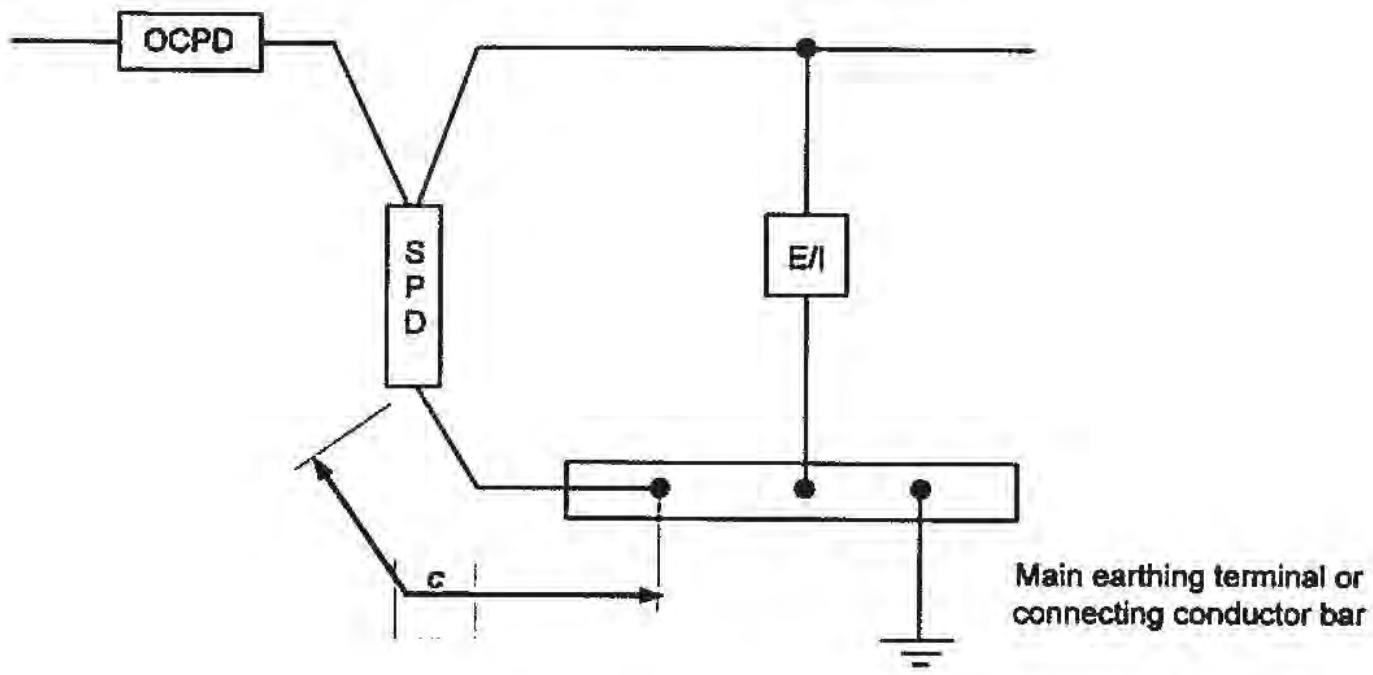

OCPD = overcurrent protective device
SPD = surge protective device
E/I = equipment or installation to be protected against overvoltages
NOTE – The line terminal on the SPD should be capable of carrying the load current.

534.2.10 Cross-sectional area of connecting conductors

The connecting conductors of SPDs shall either:

(i) have a cross-sectional area of not less than 4 mm^2 copper (or equivalent) if the cross-sectional area of the line conductors is greater than or equal to 4 mm^2, or

(ii) have a cross-sectional area not less than that of the line conductors, where the line conductors have a cross- sectional area less than 4 mm^2.

Where there is a structural lightning protection system, the minimum cross-sectional area for Type 1 SPDs shall be 16 mm^2 copper, or equivalent.

535 Devices for protection against undervoltage

A device for protection against undervoltage shall be selected and erected so as to allow compliance with the requirements of 552.1.3.

536 Co-ordination of protective devices

536.1 General

Where co-ordination of series protective devices is necessary to prevent danger and where required for proper functioning of the installation, consideration shall be given to selectivity and/or any necessary back-up protection.

Selectivity between protective devices depends on the co-ordination of the operating characteristics of two or more protective devices such that, on the incidence of fault currents within stated limits, only the device intended to operate within these limits does so (see 536.5).

COPYRIGHT

The rated breaking capacity of a protective device shall be not less than the maximum prospective short-circuit or earth fault current at the point at which the device is installed unless back-up protection is provided. A lower breaking capacity is permitted if another protective device (a back-up protective device) having the necessary breaking capacity is installed on the supply side and the characteristics of the devices are suitably co-ordinated such that the energy let-through of the upstream device does not exceed that which can be withstood without damage by the downstream device (see Chapter 43).

NOTE – Back-up protection on the load side of a protective device is acceptable only if the risk of a fault in the circuit between the two protective devices in series is negligible.

536.2 Selectivity between overcurrent protective devices

Where selectivity between overcurrent protective devices is necessary to prevent danger and where required for proper functioning of the installation, the manufacturer's instructions shall be taken into account.

536.3 Selectivity between RCDs

Where selectivity between RCDs is necessary to prevent danger and where required for proper functioning of the installation, the manufacturer's instructions shall be taken into account.

536.4 Back-up protection

Where necessary to prevent danger and where required for proper functioning of the installation, back-up protection shall be provided according to the manufacturer's information.

NOTE – Technical data for the selection of protective devices for the purpose of back-up protection are published by the manufacturer of the device to be protected.

536.5 Co-ordination of switching devices with overcurrent protective devices

536.5.1 A switching device shall be protected against overcurrent.

A switching device without integral overcurrent protection shall be co-ordinated with an appropriate overcurrent protective device.

The rated current and the characteristics of the protective device against fault current shall be in accordance with those stated by the manufacturer of the switching device.

536.5.2 Motor starters shall be co-ordinated with the appropriate fault current protective device according to IEC 60947-4-1.

537 Isolation and switching

537.1 General

This section provides requirements for:

(i) non-automatic local and remote isolation and switching measures for the prevention or removal of dangers associated with electrical installations or electrically-powered equipment and machines, and

(ii) functional switching and control.

537.1.1 According to the intended function(s), every device provided for isolation or switching shall comply with the relevant requirements of this section.

NOTE – Table 53.4L provides information on selection.

COPYRIGHT

Table 53.4L – Guidance on the selection of protective, isolation and switching devices

Device	Standard	Isolation[4]	Emergency switching[2]	Functional switching
Switching device	IEC 60669-1	No	Yes	Yes
	IEC 60669-2-1	No	Yes	Yes
	IEC 60669-2-2	No	Yes	Yes
	IEC 60669-2-3	No	Yes	Yes
	IEC 60669-2-4	Yes[3]	Yes	Yes
	IEC 60669-2-5	No	No	Yes
	IEC 60947-3	Yes[1,3]	Yes	Yes
	IEC 60947-5-1	No	Yes	Yes
Contactor	IEC 60947-4-1	Yes[1,3]	Yes	Yes
	IEC 61095	No	No	Yes
Circuit-breaker	IEC 60898-1	Yes[3]	Yes	Yes
	IEC 60947-2	Yes[1,3]	Yes	Yes
	SS 480	Yes[3]	Yes	Yes
RCD	IEC 60947-2	Yes[1.3]	Yes	Yes
	SS 97	Yes[3]	Yes	Yes
	SS 480	Yes[3]	Yes	Yes
Isolating switch	IEC 60669-2-4	Yes[3]	Yes	Yes
	IEC 60947-3	Yes[1,3]	Yes	Yes
Plug and socket-outlet (≤ 32A)	IEC 60309	Yes[3]	No	Yes
	IEC 60884	Yes[3]	No	Yes
	IEC 60906	Yes[3]	No	Yes
Plug and socket-outlet (> 32A)	IEC 60309	Yes[3]	No	No
Device for the connection of luminaire	IEC 61995-1	Yes[3]	No	No
Control and protective switching device for equipment (CPS)	IEC 60947-6-1	Yes[1 Yes[1,3),3]	Yes	Yes
	IEC 60947-6-2		Yes	Yes
Fuse	IEC 60269 series	Yes	No	No
Device with semiconductors	IEC 60669-2-1	No	No	Yes
	IEC 60669-2-5	No	No	Yes
Luminaire Supporting Coupler	BS 6972	Yes[3]	No	No
Plug and unswitched socket-outlet	SS 145-1	Yes[3]	No	Yes
	SS 145-2	Yes[3]	No	Yes
Plug and switched socket-outlet	SS 145-1	Yes[3]	No	Yes
	SS 145-2	Yes[3]	No	Yes
Plug and socket-outlet	SS 241	Yes[3]	No	Yes
Switched fused connection unit	SS 403	Yes[3]	Yes	Yes
Unswitched fused connection unit	SS 403	Yes[3] (Removal of fuse link)	No	No
Fuse	SS 167	Yes	No	No
Cooker Control Unit switch	BS 4177	Yes[3]	Yes	Yes

Yes = Function provided, No = Function not provided

(1) Function provided if the device is suitable and marked with the symbol for isolation (see IEC 60617 identity number S00288). 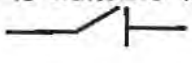

(2) see 537.4.2.5

(3) Device is suitable for on-load isolation, i.e. disconnection whilst carrying load current.

(4) In an installation forming part of a TT system, isolation requires disconnection of all the live conductors. See 537.2.2.1.

NOTE 1 – An entry of (1,3) means that the device is suitable for on-load isolation only if it is marked with the symbol for on-load isolation 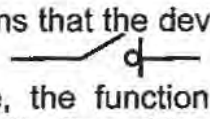

NOTE 2 – In the above table, the functions provided by the devices for isolation and switching are summarised, together with the indication of the relevant product standards.

COPYRIGHT

537.1.2 Except as required by 537.1.4, in a TN-S system the neutral conductor need not be isolated or switched where it can be regarded as being reliably connected to Earth by a suitably low impedance.

537.1.3 Each installation shall have provision for disconnection from the supply.

Where supplier provides a means of disconnection complying with Chapter 53 at the origin of the installation and agrees that it may be used as the means of isolation for the part of the installation between the origin and the main linked switch or circuit-breaker required by 537.1.4, the requirement for isolation and switching of that part of the installation is satisfied.

NOTE – A cut-out fuse may be withdrawn only by a person authorised to do so by the supplier.

537.1.4 A main linked switch or linked circuit-breaker shall be provided as near as practicable to the origin of every installation as a means of switching the supply on load and as a means of isolation.

A main switch intended for operation by ordinary persons, e.g. of a household or similar installation, shall interrupt both live conductors of a single-phase supply.

537.1.5 Where an installation is supplied from more than one source of energy, one of which requires a means of earthing independent of the means of earthing of other sources and it is necessary to ensure that not more than one means of earthing is applied at any time, a switch may be inserted in the connection between the neutral point and the means of earthing, provided that the switch is a linked switch arranged to disconnect and connect the earthing conductor for the appropriate source, at substantially the same time as the related live conductors.

537.1.6 Where an installation is supplied from more than one source, a main switch shall be provided for each source of supply and a durable warning notice shall be permanently fixed in such a position that any person seeking to operate any of these main switches will be warned of the need to operate all such switches to achieve isolation of the installation. Alternatively, a suitable interlock system shall be provided. See also 514.15.1.

537.2 Isolation

537.2.1 General

537.2.1.1 Every circuit shall be capable of being isolated from each of the live supply conductors. In a TN-S system, it is not necessary to isolate or switch the neutral conductor where it is regarded as being reliably connected to Earth by a suitably low impedance.

Provision may be made for isolation of a group of circuits by a common means, if the service conditions allow this.

537.2.1.2 Suitable means shall be provided to prevent any equipment from being inadvertently or unintentionally energised.

537.2.1.3 Where an installation or an item of equipment or enclosure contains live parts connected to more than one supply, a durable warning notice shall be placed in such a position that any person before gaining access to live parts, will be warned of the need to isolate those parts from the various supplies unless an interlocking arrangement is provided to ensure that all the circuits concerned are isolated.

537.2.1.4 Where necessary, suitable means shall be provided for the discharge of stored electrical energy.

537.2.1.5 Where an isolating device for a particular circuit is placed remotely from the equipment to be isolated, provision shall be made so that the means of isolation can be secured in the open position. Where this provision takes the form of a lock or removable handle, the key or handle shall be non-interchangeable with any other used for a similar purpose within the premises.

COPYRIGHT

537.2.1.6 For every electric discharge lighting installation having an open circuit voltage exceeding low voltage, one or more of the following means shall be provided for the isolation of every self-contained luminaire, or of every circuit supplying luminaires at a voltage exceeding low voltage:

(i) An interlock on a self-contained luminaire, so arranged that before access can be made to live parts the supply is automatically disconnected, such means being additional to the switch normally used for controlling the circuit

(ii) An effective local means for the isolation of the circuit from the supply, such means being additional to the switch normally used for controlling the circuit

(iii) A switch having a lock or removable handle, or a distribution board which can be locked, in either case complying with 537.2.1.5.

537.2.1.7 Provision shall be made for disconnecting the neutral conductor. Where this is a joint it shall be such that it is in an accessible position, can only be disconnected by means of a tool, is mechanically strong and will reliably maintain the electrical continuity.

537.2.2 Devices for isolation

537.2.2.1 A device for isolation shall isolate all live supply conductors from the circuit concerned, subject to the provisions of 537.1.2.

A device suitable for isolation shall be selected according to the requirements which are based on the overvoltage category applicable at the point of installation.

Equipment of overvoltage Categories I and II, according to IEC 60664-1, shall not be used for isolation, except for the plug of a plug and socket-outlet identified in Table 53.4L.

Semiconductor devices shall not be used as isolating devices.

Equipment used for isolation shall comply with 537.2.1.1 and 537.2.2.2 to 537.2.2.6.

537.2.2.2 The position of the contacts or other means of isolation shall be either externally visible or clearly and reliably indicated. An indication of the isolated position shall occur only when the specified isolation has been obtained in each pole.

537.2.2.3 A device for isolation shall be designed and/or installed so as to prevent unintentional or inadvertent closure.

537.2.2.4 Provision shall be made for securing off-load isolating devices against inadvertent or unauthorised opening.

NOTE – This may be achieved by locating the device in a lockable space or enclosure or by padlocking. Alternatively, the off- load device may be interlocked with a load-breaking one.

Where a link is inserted in the neutral conductor, the link shall comply with either or both of the following requirements:

(i) It cannot be removed without the use of a tool

(ii) It is accessible to skilled persons only.

537.2.2.5L Means of isolation shall preferably be provided by a multipole switching device which disconnects all applicable poles of the relevant supply.

537.2.2.6 Each device used for isolation shall be clearly identified by position or durable marking to indicate the installation or circuit it isolates.

COPYRIGHT

537.3 Switching off for mechanical maintenance

537.3.1 General

Where electrically powered equipment is within the scope of IEC 60204-1, the requirements for switching off for mechanical maintenance of that standard apply.

537.3.1.1 Means of switching off for mechanical maintenance shall be provided where mechanical maintenance may involve a risk of physical injury.

NOTE 1 – Electrically powered mechanical equipment may include rotating machines as well as heating elements and electromagnetic equipment.

NOTE 2 – Systems powered by other means, e.g. pneumatic, hydraulic or steam, are not covered by these clauses. In such cases, switching off any associated supply of electricity may not be a sufficient measure.

537.3.1.2 Suitable means shall be provided to prevent electrically powered equipment from becoming unintentionally reactivated during mechanical maintenance, unless the means of switching off is continuously under the control of any person performing such maintenance.

537.3.2 Devices for switching off for mechanical maintenance

537.3.2.1 Where practicable, a device for switching off for mechanical maintenance shall be inserted in the main supply circuit.

Where a switch is provided for this purpose, it shall be capable of cutting off the full load current of the relevant part of the installation.

Interruption of a circuit for the control of mechanical movement is permitted only where a condition equivalent to the direct interruption of the main supply is provided by one of the following:

(i) Supplementary safeguards, such as mechanical restrainers

(ii) Compliance with the requirements of a British or Harmonised Standard specification for the control devices used.

NOTE – Switching off for mechanical maintenance may be achieved, for example, by one of the following:
- multipole switch
- circuit-breaker
- control and protective switching device (CPS)
- control switch operating a contactor
- plug and socket-outlet.

537.3.2.2 A device for switching off for mechanical maintenance or a control switch for such a device shall require manual operation. The open position of the contacts of the device shall be visible or be clearly and reliably indicated.

NOTE – The indication required by this clause may be achieved by the use of the symbols 'O' and 'I' to indicate the open and closed positions respectively.

537.3.2.3 A device for switching off for mechanical maintenance shall be designed and/or installed so as to prevent inadvertent or unintentional switching on.

537.3.2.4 A device for switching off for mechanical maintenance shall be so placed and durably marked so as to be readily identifiable and convenient for the intended use.

537.3.2.5 Where a switch is used as a device for switching off for mechanical maintenance, the switch need not necessarily interrupt the neutral conductor.

COPYRIGHT

537.3.2.6 A plug and socket-outlet or similar device of rating not exceeding 16 A may be used as a device for switching off for mechanical maintenance.

537.4 Emergency switching

537.4.1 General

Where electrically powered equipment is within the scope of IEC 60204-1, the requirements for emergency switching of that standard apply.

NOTE – Emergency switching may be emergency switching on or emergency switching off.

537.4.1.1 Means shall be provided for emergency switching of any part of an installation where it may benecessary to control the supply to remove an unexpected danger.

537.4.1.2 Except as provided in 537.1.2, where a risk of electric shock is involved the emergency switching device shall be an isolating device and shall interrupt all live conductors.
Except as required by 537.1.4, where the neutral conductor can be regarded as being reliably connected to Earth in a TN-S system the neutral conductor need not be isolated or switched.

537.4.1.3 Means for emergency switching shall act as directly as possible on the appropriate supply conductors.

The arrangement shall be such that one single action only will interrupt the appropriate supply.

537.4.1.4 The arrangement of the emergency switching shall be such that its operation does not introduce a further danger or interfere with the complete operation necessary to remove the danger.

537.4.2 Devices for emergency switching

537.4.2.1 A device for emergency switching shall be capable of breaking the full load current of the relevant part(s) of the installation taking account of stalled motor currents where appropriate.

537.4.2.2 Means for emergency switching may consist of:

(i) one switching device capable of directly cutting off the appropriate supply, or

(ii) a combination of equipment activated by a single action for the purpose of cutting off the appropriate supply.

NOTE 1 – Emergency switching may be achieved, for example, by means of:
- a switch in the main circuit
- pushbuttons and the like in the control (auxiliary) circuit.

NOTE 2 – Emergency stopping may include the retention of supply for electric braking facilities.

537.4.2.3 Hand-operated switching devices for direct interruption of the main circuit shall be selected where practicable.

A device such as a circuit-breaker or a contactor operated by remote control shall open on de-energisation of the coil, or another technique of suitable reliability shall be employed.

537.4.2.4 The means of operating (handle, push-button, etc.) a device for emergency switching shall be clearly identified, preferably by colour. If a colour is used, this shall be red with a contrasting background.

537.4.2.5 The means of operation shall be readily accessible at places where a danger might occur and, where appropriate, at any additional remote position from which that danger can be removed.

COPYRIGHT

537.4.2.6 The means of operation shall be capable of latching or being restrained in the 'off' or 'stop' position, unless both the means of operation for emergency switching and for re-energising are under the control of the same person.

The release of an emergency switching device shall not re-energise the relevant part of the installation.

537.4.2.7 A device for emergency switching shall be so placed and durably marked so as to be readily identifiable and convenient for the intended use.

537.4.2.8 A plug and socket-outlet or similar device shall not be selected as a device for emergency switching.

537.5 Functional switching (control)

537.5.1 General

537.5.1.1 A functional switching device shall be provided for each part of a circuit which may require to be controlled independently of other parts of the installation.

537.5.1.2 Functional switching devices need not necessarily control all live conductors of a circuit. Switching of the neutral shall be in compliance with 530.3.2L.

537.5.1.3 In general, all current-using equipment requiring control shall be controlled by an appropriate functional switching device.

A single functional switching device may control two or more items of equipment intended to operate simultaneously.

537.5.1.4 Functional switching devices ensuring the changeover of supply from alternative sources shall affect all live conductors and shall not be capable of putting the sources in parallel, unless the installation is specifically designed for this condition.

In these cases, no provision shall be made for isolation of protective conductors.

537.5.2 Functional switching devices

537.5.2.1 Functional switching devices shall be suitable for the most onerous duty they are intended to perform.

537.5.2.2 Functional switching devices may control the current without necessarily opening the corresponding poles.

NOTE – Semiconductor switching devices are examples of devices capable of interrupting the current in the circuit but not opening the corresponding poles.

537.5.2.3 Off-load isolators (disconnectors), fuses and links shall not be used for functional switching.

537.5.2.4L Each general purpose socket-outlet shall be controlled by a switch immediately adjacent thereto or combined therewith. For the connection of specific current-carrying equipment by means of plug and socket-outlet with flexible cord, the socket-outlet shall be installed at a location beyond reach and shall be controlled by a switch readily accessible and, in any case, not more than 3 m away from the socket-outlet.

537.5.3 Control circuits (auxiliary circuits)

A control circuit shall be designed, arranged and protected to limit dangers resulting from a fault between the control circuit and other conductive parts liable to cause malfunction (e.g. inadvertent operation) of the controlled equipment.

COPYRIGHT

537.5.4 Motor control

Where electrically powered equipment is within the scope of IEC 60204-1, the requirements for motor control of that standard apply.

537.5.4.1 Motor control circuits shall be designed so as to prevent any motor from restarting automatically after a stoppage due to a fall in or loss of voltage, if such starting is liable to cause danger.

537.5.4.2 Where reverse-current braking of a motor is provided, provision shall be made for the avoidance of reversal of the direction of rotation at the end of braking if such reversal may cause danger.

537.5.4.3 Where safety depends on the direction of rotation of a motor, provision shall be made for the prevention of reverse operation due to, for example, a reversal of phases.

537.6 Firefighter's switches

537.6.1 A firefighter's switch shall be provided in the low voltage circuit supplying:

(i) exterior electrical installations operating at a voltage exceeding low voltage, and

(ii) interior discharge lighting installations operating at a voltage exceeding low voltage.

For the purpose of this clause, an installation in a covered market, arcade or shopping mall is considered to be an exterior installation. A temporary installation in a permanent building used for exhibitions is considered not to be an exterior installation.

This requirement does not apply to a portable discharge lighting luminaire or to a sign of rating not exceeding 100 W and fed from a readily accessible socket-outlet.

537.6.2 Every exterior installation covered by 537.6.1 in each single premises shall wherever practicable be controlled by a single firefighter's switch. Similarly, every internal installation covered by 537.6.1 in each single premises shall be controlled by a single firefighter's switch independent of the switch for any exterior installation.

537.6.3 Every firefighter's switch provided for compliance with 537.6.1 shall comply with all the relevant requirements of the following items (i) to (iv) and any requirements of the local fire authority:

(i) For an exterior installation, the switch shall be outside the building and adjacent to the equipment, or alternatively a notice indicating the position of the switch shall be placed adjacent to the equipment and a notice shall be fixed near the switch so as to render it clearly distinguishable

(ii) For an interior installation, the switch shall be in the main entrance to the building or in another position to be agreed with the local fire authority

(iii) The switch shall be placed in a conspicuous position, reasonably accessible to firefighters and, except where otherwise agreed with the local fire authority, at not more than 2.75 m from the ground or the standing beneath the switch

(iv) Where more than one switch is installed on any one building, each switch shall be clearly marked to indicate the installation or part of the installation which it controls.

COPYRIGHT

537.6.4 A firefighter's switch provided for compliance with 537.6.1 to 537.6.3 shall:

(i) be coloured red and have fixed on or near it a permanent durable nameplate marked with the words 'FIREMAN'S SWITCH', the plate being of minimum size 150 mm by 100 mm, and having lettering easily legible from a distance appropriate to the site conditions but not less than 36 font size, and

(ii) have its ON and OFF positions clearly indicated by lettering legible to a person standing at the intended site, with the OFF position at the top, and

(iii) be provided with a device to prevent the switch being inadvertently returned to the ON position, and

(iv) be arranged to facilitate operation by a firefighter.

538 Reserved for future use

CHAPTER 54

EARTHING ARRANGEMENTS AND PROTECTIVE CONDUCTORS

541 General

541.1L Every means of earthing and every protective conductor shall be selected and erected so as to satisfy the requirements of this Code.

541.2 The earthing system of the installation may be subdivided, in which case each part thus divided shall comply with the requirements of this chapter.

541.3L Where there is also a lightning protection system, reference shall be made to the SS 555 series.

542 Earthing arrangements

542.1 General requirements

542.1.1 The earthing arrangements may be used jointly or separately for protective and functional purposes, according to the requirements of the installation.

542.1.201L The main earthing terminal shall be connected with Earth by one of the methods described in 542.1.2.1 to 542.1.2.3L, as appropriate to the type of system of which the installation is to form a part and in compliance with 542.1.3.1L and 542.1.3.2.

NOTE – See Part 2 for definitions of systems.

542.1.2 Supply arrangements

542.1.2.1 For a TN-S system, means shall be provided for the main earthing terminal of the installation to be connected to the earthed point of the source of energy. Part of the connection may be formed by the supplier's lines and equipment.

542.1.2.2L Reserved for future use

COPYRIGHT

542.1.2.3L For a TT, the main earthing terminal shall be connected via an earthing conductor to an earth electrode complying with 542.2.

542.1.2.4L Where the supply to an installation is at high voltage, protection against faults between the high voltage supply and earth shall be provided in accordance with SS 551.

542.1.3 Installation earthing arrangements

542.1.3.1L The earthing arrangements shall be such that:

(i) the value of impedance from the consumer's main earthing terminal to the earthed point of the supply for TN systems, or to Earth for TT, is in accordance with the protective and functional requirements of the installation, and considered to be continuously effective, and

(ii) earth fault currents and protective conductor currents which may occur are carried without danger, particularly from thermal, thermomechanical and electromechanical stresses, and

(iii) they are adequately robust or have additional mechanical protection appropriate to the assessed conditions of external influence.

542.1.3.2 Precautions shall be taken against the risk of damage to other metallic parts through electrolysis.

542.1.3.3 Where a number of installations have separate earthing arrangements, any protective conductors common to any of these installations shall either be capable of carrying the maximum fault current likely to flow through them or be earthed within one installation only and insulated from the earthing arrangements of any other installation. In the latter circumstances, if the protective conductor forms part of a cable, the protective conductor shall be earthed only in the installation containing the associated protective device.

542.2 Earth electrodes

542.2.1 The design used for, and the construction of, an earth electrode shall be such as to withstand damage and to take account of possible increase in resistance due to corrosion.

542.2.2 Reserved for future use

542.2.3L Suitable earth electrodes shall be used. The following types of earth electrode are recognised for the purposes of the clauses:

(i) Earth rods or pipes

(ii) Earth tapes or wires

(iii) Earth plates

(iv) Underground structural metalwork embedded in foundations

(v) Welded metal reinforcement of concrete (except pre-stressed concrete) embedded in the ground

(vi) Lead sheaths and other metal coverings of cables, where not precluded by 542.2.5

(vii) other suitable underground metalwork.

NOTE – Further information on earth electrodes can be found in SS 551.

COPYRIGHT

542.2.4 The type and embedded depth of an earth electrode shall be such that soil drying and freezing will not increase its resistance above the required value.

542.2.5 The use, as an earth electrode, of the lead sheath or other metal covering of a cable shall be subject to all of the following conditions:

(i) Adequate precautions to prevent excessive deterioration by corrosion

(ii) The sheath or covering shall be in effective contact with Earth

(iii) The consent of the owner of the cable shall be obtained

(iv) Arrangements shall exist for the owner of the electrical installation to be warned of any proposed change to the cable which might affect its suitability as an earth electrode.

542.2.6 A metallic pipe for gases or flammable liquids shall not be used as an earth electrode. The metallic pipe of a water utility supply shall not be used as an earth electrode. Other metallic water supply pipework shall not be used as an earth electrode unless precautions are taken against its removal and it has been considered for such a use.

542.2.7 An earth electrode shall not consist of a metal object immersed in water.

542.3L Earthing conductors

542.3.1 Every earthing conductor shall comply with 544.1.1L for the cross-sectional area of a main protective bonding conductor. In addition, where buried in the ground, the earthing conductor shall have a cross-sectional area not less than that stated in Table 54.1. For a tape or strip conductor, the thickness shall be such as to withstand mechanical damage and corrosion.

NOTE – For further information see SS 551.

Table 54.1 – Minimum cross-sectional area of a buried earthing conductor

	Protected against mechanical damage	Not protected against mechanical damage
Protected against corrosion by a sheath	2.5 mm^2 copper 10 mm^2 steel	16 mm^2 copper 16 mm^2 coated steel
Not protected against corrosion	25 mm^2 copper 50 mm^2 steel	

542.3.2L The connection of an earthing conductor to an earth electrode or other means of earthing shall be electrically and mechanically terminated, and labelled in accordance with 514.13.1L. It shall be suitably protected against corrosion.

542.4 Main earthing terminals or bars

542.4.1L In every installation a main earthing terminal shall be provided to connect the following to the earthing conductor:

(i) The circuit protective conductors

(ii) The protective bonding conductors

(iii) Functional earthing conductors (if required)

(iv) Lightning protection system bonding conductor, if any (see 411.3.1.2L).

542.4.2 To facilitate measurement of the resistance of the earthing arrangements, means shall be provided in an accessible position for disconnecting the earthing conductor. Such means may conveniently be combined with the main earthing terminal or bar. Any joint shall be capable of disconnection only by means of a tool.

COPYRIGHT

543 Protective conductors

543.1 Cross-sectional areas

543.1.1L The cross-sectional area of every protective conductor, other than a protective bonding conductor, shall be:

(i) calculated in accordance with 543.1.3, or

(ii) selected in accordance with 543.1.4L.

Calculation in accordance with 543.1.3 is necessary if the choice of cross-sectional area of line conductors has been determined by considerations of short-circuit current and if the earth fault current is expected to be less than the short-circuit current.

If the protective conductor:

(iii) is not an integral part of a cable, or

(iv) is not formed by conduit, ducting or trunking, or

(v) is not contained in an enclosure formed by a wiring system,

the cross-sectional area shall be not less than 2.5 mm^2 copper equivalent if protection against mechanical damage is provided, and 4 mm^2 copper equivalent if mechanical protection is not provided (see also 543.3.1).

For a protective conductor buried in the ground, 542.3.1 for earthing conductors also applies. The cross-sectional area of a protective bonding conductor shall comply with Section 544.

543.1.2L Where a protective conductor is common to two or more circuits, its cross-sectional area shall be:

(i) calculated in accordance with 543.1.3 for the most onerous of the values of fault current and operating time encountered in each of the various circuits, or

(ii) selected in accordance with 543.1.4L so as to correspond to the cross-sectional area of the largest line conductor of the circuits.

543.1.3 The cross-sectional area, where calculated, shall be not less than the value determined by the following formula or shall be obtained by reference to SS 551:

$$S = \sqrt{\frac{I^2t}{k}}$$

NOTE – This equation is an adiabatic equation and is applicable for disconnection times not exceeding 5s

where:

S is the nominal cross-sectional area of the conductor in mm^2

I is the value in amperes (rms for a.c.) of fault current for a fault of negligible impedance, which can flow through the associated protective device, due account being taken of the current limiting effect of the circuit impedances and the limiting capability (I^2t) of that protective device

t is the operating time of the disconnecting device in seconds corresponding to the fault current I amperes

k is a factor taking account of the resistivity, temperature coefficient and heat capacity of the conductor material, and the appropriate initial and final temperatures.

COPYRIGHT

Values of k for protective conductors in various use or service are as given in Tables 54.2 to 54.6. The values are based on the initial and final temperatures indicated in each table.

Where the application of the formula produces a non-standard size, a conductor having the nearest larger standard cross-sectional area shall be used.

Table 54.2 – Values of k for insulated protective conductor not incorporated in a cable and not bunched with cables, or for separate bare protective conductor in contact with cable covering but not bunched with cables where the assumed initial temperature is 30 °C

Material of conductor	Insulation of protective conductor or cable covering		
	70 °C thermoplastic	90 °C thermoplastic	90 °C thermosetting
Copper	143/133*	143/133*	176
Aluminium	95/88*	95/88*	116
Steel	52	52	64
Assumed initial temperature	30 °C	30 °C	30 °C
Final temperature	160 °C/140 °C*	160 °C/140 °C*	250 °C

* Above 300 mm²

Table 54.3 – Values of k for protective conductor incorporated in a cable or bunched with cables, where the assumed initial temperature is 70 °C or greater

Material of conductor	Insulation material		
	70 °C thermoplastic	90 °C thermoplastic	90 °C thermosetting
Copper	115/103*	108/86*	143
Aluminium	76/68*	66/57*	94
Assumed initial temperature	70 °C	90 °C	90 °C
Final temperature	160 °C/140 °C*	160 °C/140 °C*	250 °C

* Above 300 mm²

Table 54.4 – Values of k for protective conductor as a sheath or armour of a cable

Material of conductor	Insulation material		
	70 °C thermoplastic	90 °C thermoplastic	90 °C thermosetting
Aluminium	93	85	85
Steel	51	46	46
Lead	26	23	23
Assumed initial temperature	60 °C	80 °C	80 °C
Final temperature	200 °C*	200 °C*	200 °C

COPYRIGHT

Table 54.5 – Values of k for steel conduit, ducting and trunking as the protective conductor

Material of protective conductor	Insulation material		
	70 °C thermoplastic	90 °C thermoplastic	90 °C thermosetting
Steel conduit, ducting and trunking	47	44	58
Assumed initial temperature	50 °C	60 °C	60 °C
Final temperature	160 °C*	160 °C*	250 °C

Table 54.6 – Values of k for bare conductor where there is no risk of damage to any neighbouring material by the temperatures indicated

The temperatures indicated are valid only where they do not impair the quality of the connections

Material of conductor	Conditions		
	Visible and in restricted areas	Normal conditions	Fire risk
Copper	228	159	138
Aluminium	125	105	91
Steel	82	58	50
Assumed initial temperature	30 °C	30 °C	30 °C
Final temperature			
Copper Conductors	500 °C	200 °C*	150 °C
Aluminium conductors	300 °C	200 °C*	150 °C
Steel conductors	300 °C	200 °C*	150 °C

543.1.4L Where it is desired not to calculate the minimum cross-sectional area of a protective conductor in accordance with 543.1.3, the cross-sectional area may be determined in accordance with Table 54.7.

Where the application of Table 54.7 produces a non-standard size, a conductor having the nearest larger standard cross-sectional area shall be used.

Table 54.7 – Minimum cross-sectional area of protective conductor in relation to the cross-sectional area of associated line conductor

Cross-sectional area of line conductor S	Minimum cross-sectional area of the corresponding protective conductor	
	If the protective conductor is of the same material as the line conductor	If the protective conductor is not of the same material as the line conductor
(mm^2)	(mm^2)	(mm^2)
$S \leq 16$	S	$\frac{k_1}{k_2} \times S$
$16 < S \leq 35$	16	$\frac{k_1}{k_2} \times 16$
$S > 35$	$\frac{S}{2}$	$\frac{k_1}{k_2} \times \frac{S}{2}$

COPYRIGHT

where:

k_1 is the value of k for the line conductor, selected from Table 43.1 in Chapter 43 according to the materials of both conductor and insulation.

k_2 is the value of k for the protective conductor, selected from Tables 54.2 to 6, as applicable.

543.2 Types of protective conductor

543.2.1L A protective conductor may consist of one or more of the following:

(i) A single-core cable

(ii) A conductor in a cable

(iii) An insulated or bare conductor in a common enclosure with insulated live conductors

(iv) A fixed bare or insulated conductor

(v) A metal covering, for example, the sheath, screen of a cable

(vi) **Reserved for future use**

543.2.2L Enclosure or frame of a switchgear or controlgear assembly or busbar trunking system shall not be used as protective conductor.

543.2.3L Reserved for future use

543.2.4L A protective conductor of the types described in items (i) to (iv) of 543.2.1L and of cross-sectional area 10 mm^2 or less, shall be of copper.

543.2.5L Reserved for future use

543.2.6L Reserved for future use

543.2.7L Where the protective conductor is formed by the metal sheath and/or armour of a cable, the earthing terminal of each accessory shall be connected by a separate protective conductor to an earthing terminal incorporated in the associated box or other enclosure.

543.2.8 Reserved for future use

543.2.9L The circuit protective conductor of every ring final circuit shall also be run in the form of a ring having both ends connected to the earthing terminal at the origin of the circuit.

543.2.10L Reserved for future use

543.3 Preservation of electrical continuity of protective conductors

543.3.1 A protective conductor shall be suitably protected against mechanical and chemical deterioration and electrodynamic effects.

543.3.2L Every connection and joint shall be accessible for inspection, testing and maintenance except as provided by 526.3L.

543.3.201L A protective conductor having a cross-sectional area up to and including 6 mm^2 shall be protected throughout by a covering at least equivalent to that provided by the insulation of a single-core non-sheathed cable of appropriate size having a voltage rating of at least 450/750 V.

COPYRIGHT

Where the sheath of a cable incorporating an uninsulated protective conductor of cross-sectional area up to and including 6 mm^2 is removed adjacent to joints and terminations, the protective conductor shall be protected by insulating sleeving complying with IEC 60684 series.

543.3.3L A switching device shall not be inserted in a protective conductor except for the following:

(i) as permitted by 537.1.5

(ii) multipole linked switching or plug-in devices in which the protective conductor circuit shall not be interrupted before the live conductors and shall be re-established not later than when the live conductors are reconnected.

Joints intended to be disconnected for test purposes are permitted in a protective conductor circuit.

543.3.4 Where electrical monitoring of earthing is used, no dedicated devices (e.g. operating sensors, coils) shall be connected in series with the protective conductor (see BS 4444).

543.3.5L An exposed-conductive-part of equipment shall not be used to form a protective conductor for other equipment except as provided by 543.2.1L and 543.2.2L.

543.3.6 Every joint in metallic conduit shall be mechanically and electrically continuous.

543.4 Reserved for future use

543.5 Earthing arrangements for combined protective and functional purposes

543.5.1 Where earthing for combined protective and functional purposes is required, the requirements for protective measures shall take precedence.

543.6 Earthing arrangements for protective purposes

543.6.1 Where overcurrent protective devices are used for fault protection, the protective conductor shall be incorporated in the same wiring system as the live conductors or in their immediate proximity.

543.7 Earthing requirements for the installation of equipment having high protective conductor currents

543.7.1 General

543.7.1.201L Equipment having a protective conductor current exceeding 3.5 mA but not exceeding 10 mA, shall be either permanently connected to the fixed wiring of the installation without the use of a plug and socket-outlet or connected by means of a plug and socket-outlet complying with IEC 60309-2.

543.7.1.202L Equipment having a protective conductor current exceeding 10 mA shall be connected to the supply by one of the following methods:

(i) Permanently connected to the wiring of the installation, with the protective conductor selected in accordance with 543.7.1.203L. The permanent connection to the wiring may be by means of a flexible cable

(ii) A flexible cable with a plug and socket-outlet complying with IEC 60309-2, provided that either:

(a) the protective conductor of the associated flexible cable is of a cross-sectional area not less than 2.5 mm^2 for plugs rated at 16A and not less than 4 mm^2 for plugs rated above 16 A, or

COPYRIGHT

(b) the protective conductor of the associated flexible cable is of a cross-sectional area not less than that of the line conductor

(iii) A protective conductor complying with Section 543 with an earth monitoring system to BS 4444 installed which, in the event of a continuity fault occurring in the protective conductor, automatically disconnects the supply to the equipment.

543.7.1.203L The wiring of every final circuit and distribution circuit intended to supply one or more items of equipment, such that the total protective conductor current is likely to exceed 10 mA, shall have a high integrity protective connection complying with one or more of the following:

(i) A single protective conductor having a cross-sectional area of not less than 10 mm^2, complying with the requirements of 543.2 and 543.3

(ii) A single copper protective conductor having a cross-sectional area of not less than 4 mm^2, complying with the requirements of 543.2 and 543.3, the protective conductor being enclosed to provide additional protection against mechanical damage, for example, within a flexible conduit

(iii) **Reserved for future use**

(iv) An earth monitoring system to BS 4444 may be installed which, in the event of a continuity fault occurring in the protective conductor, automatically disconnects the supply to the equipment

(v) Connection of the equipment to the supply by means of a double-wound transformer or equivalent unit, such as a motor-alternator set, the protective conductor of the incoming supply being connected to the exposed-conductive-parts of the equipment and to a point of the secondary winding of the transformer or equivalent device. The protective conductor(s) between the equipment and the transformer or equivalent device shall comply with one of the arrangements described in (i) to (iv) above.

543.7.1.204L Where two protective conductors are used in accordance with 543.7.1.203L(iii), the ends of the protective conductors shall be terminated independently of each other at all connection points throughout the circuit, e.g. the distribution board, junction boxes and socket-outlets. This requires an accessory to be provided with two separate earth terminals.

543.7.1.205 At the distribution board information shall be provided indicating those circuits having a high protective conductor current. This information shall be positioned so as to be visible to a person who is modifying or extending the circuit.

543.7.2 Socket-outlet final circuits

543.7.2.201 For a final circuit with a number of socket-outlets or connection units intended to supply two or more items of equipment, where it is known or reasonably to be expected that the total protective conductor current in normal service will exceed 10 mA, the circuit shall be provided with a high integrity protective conductor connection complying with the requirements of 543.7.1. The following arrangements of the final circuit are acceptable:

(i) A ring final circuit with a ring protective conductor. Spurs, if provided, require high integrity protective conductor connections complying with the requirements of 543.7.1

(ii) A radial final circuit with a single protective conductor:

(a) the protective conductor being connected as a ring, or

(b) a separate protective conductor being provided at the final socket-outlet by connection to the metal conduit or ducting, or

COPYRIGHT

(c) where two or more similar radial circuits supply socket-outlets in adjacent areas and are fed from the same distribution board, have identical means of short-circuit and overcurrent protection and circuit protective conductors of the same cross-sectional area, then a second protective conductor may be provided at the final socket-outlet on one circuit by connection to the protective conductor of the adjacent circuit

(iii) Other circuits complying with the requirements of 543.7.1.

544 Protective bonding conductors

544.1 Main protective bonding conductors

544.1.1L A main protective bonding conductor shall have a cross-sectional area not less than half the cross-sectional area required for the earthing conductor of the installation and not less than 6 mm^2. The cross-sectional area need not exceed 25 mm^2 if the bonding conductor is of copper or a cross-sectional area affording equivalent conductance in other metals.

The main protective bonding conductor shall be selected in accordance with the neutral conductor of the supply and Table 54.8L.

Table 54.8L – Minimum cross-sectional area of the main protective bonding conductor in relation to the neutral of the supply

Copper equivalent cross-sectional area of the supply neutral conductor	Minimum copper equivalent* cross-sectional area of the main protective bonding conductor
35 mm^2 or less	10 mm^2
over 35 mm^2 up to 50 mm^2	16 mm^2
over 50 mm^2 up to 95 mm^2	25 mm^2

* The minimum copper equivalent cross-sectional area is given by a copper bonding conductor of the tabulated cross-sectional area or a bonding conductor of another metal affording equivalent conductance.

544.1.2 The main equipotential bonding connection to any gas, water or other service shall be made as near as practicable to the point of entry of that service into the premises. Where there is an insulating section or insert at that point, or there is a meter, the connection shall be made to the consumer's hard metal pipework and before any branch pipework. Where practicable the connection shall be made within 600 mm of the meter outlet union or at the point of entry to the building if the meter is external.

544.2 Supplementary bonding conductors

544.2.1 A supplementary bonding conductor connecting two exposed-conductive-parts shall have a conductance, if sheathed or otherwise provided with mechanical protection, not less than that of the smaller protective conductor connected to the exposed-conductive-parts. If mechanical protection is not provided, its cross-sectional area shall be not less than 4 mm^2.

544.2.2 A supplementary bonding conductor connecting an exposed-conductive-part to an extraneous-conductive-part shall have a conductance, if sheathed or otherwise provided with mechanical protection, not less than half that of the protective conductor connected to the exposed-conductive-part. If mechanical protection is not provided, its cross-sectional area shall be not less than 4 mm^2.

COPYRIGHT

544.2.3L A supplementary bonding conductor connecting two extraneous-conductive-parts shall have a cross- sectional area not less than 2.5 mm^2 if sheathed or otherwise provided with mechanical protection or 4 mm^2 if mechanical protection is not provided, except that where one of the extraneous-conductive-parts is connected to an exposed-conductive-part in compliance with 544.2.2, that clause shall apply also to the conductor connecting the two extraneous-conductive-parts.

544.2.4L Except where 544.2.5 applies, supplementary bonding shall be provided by a supplementary conductor, a conductive part of a permanent and reliable nature, or by a combination of these.

544.2.5 Where supplementary bonding is to be applied to a fixed appliance which is supplied via a short length of flexible cable from an adjacent connection unit or other accessory, incorporating a flex outlet, the circuit protective conductor within the flexible cable shall be deemed to provide the supplementary bonding connection to the exposed-conductive-parts of the appliance, from the earthing terminal in the connection unit or other accessory.

CHAPTER 55

OTHER EQUIPMENT

551 Low voltage generating sets

551.1L Scope

This section applies to low voltage and extra-low voltage installations which incorporate generating sets intended to supply, either continuously or occasionally, all or part of the installation. Requirements are included for installations with the following supply arrangements:

(i) Supply to an installation which is not connected to a system for distribution of electricity to the public

(ii) Supply to an installation as an alternative to a system for distribution of electricity to the public

(iii) **Reserved for future use**

This section does not apply to self-contained items of extra-low voltage electrical equipment which incorporate both the source of energy and the energy-using load and for which a specific product standard exists that includes the requirements for electrical safety.

551.1.1 Generating sets with the following power sources are considered:

(i) Combustion engines

(ii) Turbines

(iii) Electric motors

(iv) Photovoltaic cells

(v) Electrochemical accumulators

(vi) Other suitable sources.

551.1.2 Generating sets with the following electrical characteristics are considered:

(i) Mains-excited and separately excited synchronous generators

COPYRIGHT

(ii) Mains-excited and self-excited asynchronous generators

(iii) Mains-commutated and self-commutated static convertors with or without bypass facilities.

551.1.3L The use of generating sets for the following purposes is considered:

(i) Supply to permanent installations

(ii) Supply to temporary installations (SS CP 88-1 and SS CP 88-2 applies)

(iii) Supply to mobile equipment which is not connected to a permanent fixed installation

(iv) **Reserved for future use**

551.2 General requirements

551.2.1 The means of excitation and commutation shall be appropriate for the intended use of the generating set and the safety and proper functioning of other sources of supply shall not be impaired by the generating set.

551.2.2 The prospective short-circuit current and prospective earth fault current shall be assessed for each source of supply or combination of sources which can operate independently of other sources or combinations. The short-circuit rating of protective devices within the installation and, where appropriate, connected to a system for distribution of electricity to the public, shall not be exceeded for any of the intended methods of operation of the sources.

551.2.3 Where the generating set is intended to provide a supply to an installation which is not connected to a system for distribution of electricity to the public the capacity and operating characteristics of the generating set shall be such that danger or damage to equipment does not arise after the connection or disconnection of any intended load as a result of the deviation of the voltage or frequency from the intended operating range. Means shall be provided to automatically disconnect such parts of the installation as may be necessary if the capacity of the generating set is exceeded.

NOTE 1 – Consideration should be given to the intended duty cycle and size of individual connected loads as a proportion of the capacity of the generating set and to the starting characteristics of any connected electric motors.

NOTE 2 – Consideration should be given to the power factor specified for protective devices in the installation.

NOTE 3 – The installation of a generating set within an existing building or installation may change the conditions of external influence for the installation (see Part 3), for example by the introduction of moving parts, parts at high temperature or by the presence of flammable fluids and noxious gases, etc.

551.2.4 Provision for isolation shall meet the requirements of Section 537 for each source or combination of sources of supply.

551.3 Protective measure: Extra-low voltage provided by SELV or PELV

551.3.1 Additional requirements for SELV and PELV where the installation is supplied from more than one source

Where a SELV or PELV system may be supplied by more than one source, the requirements of 414.3L shall apply to each source. Where one or more of the sources is earthed, the requirements for PELV systems in 414.4 shall apply.

If one or more of the sources does not meet the requirements of 414.3, the system shall be treated as a FELV system and the requirements of 411.7 shall apply.

COPYRIGHT

551.3.2 Where it is necessary to maintain the supply to an extra-low voltage system following the loss of one or more sources of supply, each source of supply or combination of sources of supply which can operate independently of other sources or combinations shall be capable of supplying the intended load of the extra-low voltage system. Provisions shall be made so that loss of the low voltage supply to an extra-low voltage source does not lead to danger or damage to other extra-low voltage equipment.

NOTE – Such provisions may be necessary in supplies for safety services (see Chapter 56).

551.4 Fault protection

551.4.1 Fault protection shall be provided for the installation in respect of each source of supply or combination of sources of supply that can operate independently of other sources or combinations of sources.

The fault protective provisions shall be selected or precautions shall be taken to ensure that where fault protective provisions are achieved in different ways within the same installation or part of an installation according to the active sources of supply, no influence shall occur or conditions arise that could impair the effectiveness of the fault protective provisions.

NOTE – This might, for example, require the use of a transformer providing electrical separation between parts of the installation using different earthing systems.

551.4.2 The generating set shall be connected so that any provision within the installation for protection by RCDs in accordance with Chapter 41 remains effective for every intended combination of sources of supply.

NOTE – Connection of live parts of the generator with Earth may affect the protective measure.

551.4.3 Protection by automatic disconnection of supply

551.4.3.1L Protection by automatic disconnection of supply shall be provided in accordance with Section 411, except as modified for particular cases by 551.4.3.3.

551.4.3.2 Reserved for future use

551.4.3.3 Additional requirements for installations incorporating static convertors

551.4.3.3.1 Where fault protection for parts of the installation supplied by the static convertor relies upon the automatic closure of the bypass switch and the operation of protective devices on the supply side of the bypass switch is not within the time required by Section 411, supplementary equipotential bonding shall be provided between simultaneously accessible exposed-conductive-parts and extraneous-conductive-parts on the load side of the static convertor in accordance with 415.2.

The resistance (R) of the supplementary protective bonding conductor required between simultaneously accessible exposed-conductive parts and extraneous-conductive-parts shall fulfil the following condition:

$$R \leq 50/I_a$$

where Ia is the maximum earth fault current which can be supplied by the static convertor when the bypass switch is closed.

551.4.3.3.2 Precautions shall be taken or equipment shall be selected so that the correct operation of protective devices is not impaired by d.c. currents generated by a static convertor or by the presence of filters.

COPYRIGHT

551.4.3.3.3 A means of isolation shall be installed on both sides of a static convertor. This requirement does not apply on the power source side of a static convertor which is integrated in the same enclosure as the power source.

551.4.4 Reserved for future use

551.5 Protection against overcurrent

551.5.1 Where overcurrent protection of the generating set is required, it shall be located as near as practicable to the generator terminals.

NOTE – The contribution to the prospective short-circuit current by a generating set may be time-dependent and may be much less than the contribution made by a system for distribution of electricity to the public.

551.5.2L Where two or more generating sets may operate in parallel, circulating harmonic currents shall be limited so that the thermal rating of conductors is not exceeded.

The effects of circulating harmonic currents may be limited by one or more of the following:

(i) The selection of generating sets with compensated windings

(ii) The provision of a suitable impedance in the connection to the generator star points

(iii) The provision of switches which interrupt the circulatory circuit but which are interlocked so that at all times fault protection is not impaired

(iv) The provision of filtering equipment

(v) Other suitable means.

NOTE – Consideration should be given to the maximum voltage which may be produced across an impedance connected to limit circulating harmonic currents.

551.6 Reserved for future use

551.7 Reserved for future use

551.8 Requirements for installations incorporating stationary batteries

551.8.1 Stationary batteries shall be installed so that they are accessible only to skilled or instructed persons.

NOTE – This generally requires the battery to be installed in a secure location or, for smaller batteries, a secure enclosure.

The location or enclosure shall be adequately ventilated.

551.8.2 Battery connections shall have basic protection by insulation or enclosures or shall be arranged so that two bare conductive parts having between them a potential difference exceeding 120 V cannot be inadvertently touched simultaneously.

552 Rotating machines

NOTE – See also 537.5.4 Motor control.

COPYRIGHT

552.1 Rotating machines

552.1.1L All equipment, including cable, of every circuit carrying the starting, accelerating and load currents of a motor shall be suitable for a current at least equal to the full-load current rating of the motor when rated in accordance with the appropriate Singapore Standard. Where the motor is intended for intermittent duty and for frequent starting and stopping, account shall be taken of any cumulative effects of the starting or braking currents upon the temperature rise of the equipment of the circuit.

552.1.2L Every electric motor having a rating exceeding 0.37 kW shall be provided with control equipment incorporating means of protection against overload of the motor. This requirement does not apply to a motor incorporated in an item of current-using equipment complying as a whole with an appropriate Singapore Standard.

552.1.3 Except where failure to start after a brief interruption would be likely to cause greater danger, every motor shall be provided with means to prevent automatic restarting after a stoppage due to a drop in voltage or failure of supply, where unexpected restarting of the motor might cause danger. These requirements do not preclude arrangements for starting a motor at intervals by an automatic control device, where other adequate precautions are taken against danger from unexpected restarting.

553 Accessories

553.1 Plugs and socket-outlets

553.1.1L Every plug and socket-outlet shall comply with all the requirements of items (i) and (ii) below and, in addition, with the appropriate requirements of 553.1.2L to 553.2.2:

(i) Except for SELV circuits, it shall not be possible for any pin of a plug to make contact with any live contact of its associated socket-outlet while any other pin of the plug is completely exposed, and

(ii) It shall not be possible for any pin of a plug to make contact with any live contact of any socket-outlet within the same installation other than the type of socket-outlet for which the plug is designed.

553.1.2L Except for SELV or a special circuit from 553.1.5L, every plug and socket-outlet shall be of the non-reversible type, with provision for the connection of a protective conductor.

553.1.3L Except where 553.1.5L applies, in a low voltage circuit every plug and socket-outlet shall conform with the applicable standard listed in Table 55.1L.

Table 55.1L – Plugs and socket-outlets for low voltage circuits

Type of plug and socket-outlet	Rating (amperes)	Applicable Standards
Fused plugs and shuttered socket-outlets, 2-pole and earth, for a.c.	13	SS 145 (fuses to SS 167)
Plug, fused or non-fused, and socket-outlets, 2-pole and earth	2, 5, 15, 30	SS 472 (fuses, if any, to BS 646)
Plugs and socket-outlets (industrial type)	16, 32, 63, 125	IEC 60309-2

COPYRIGHT

553.1.201L Every socket-outlet for household and similar use shall be of the shuttered type and, for an a.c. installation, shall preferably be of a type complying with SS 145.

553.1.5L A plug and socket-outlet not complying with SS 145, BS 472 or IEC 60309-2, may be used in single-phase a.c. or two-wire d.c. circuits operating at a nominal voltage not exceeding 250 V for:

(i) the connection of an electric clock, provided that the plug and socket-outlet are designed specifically for that purpose, and that each plug incorporates a fuse of rating not exceeding 3 amperes complying with BS 646 or SS 167 as appropriate.

(ii) the connection of an electric shaver, provided that the socket-outlet is either incorporated in a shaver supply unit complying with IEC 61558-2-5 or, in a room other than a bathroom, is a type complying with BS 4573

(iii) a circuit having special characteristics such that danger would otherwise arise or it is necessary to distinguish the function of the circuit.

553.1.6L A socket-outlet on a wall or similar structure shall be mounted at a height above the floor or any working surface to minimise the risk of mechanical damage to the socket-outlet or to an associated plug and its flexible cable which might be caused during insertion, use or withdrawal of the plug. Where a socket-outlet is mounted in a floor, means should be provided to ensure that the floor may be washed without risk of shock or detriment to the insulation. Where a socket-outlet is mounted on a wall, it is recommended that it should be mounted a minimum height of 150 mm from the floor level, or 150 mm above working surface e.g. in a kitchen.

553.1.7L Where portable equipment is likely to be used, provision shall be made so that the equipment can be fed from an adjacent and conveniently accessible socket-outlet, taking account of the length of flexible cable normally fitted to portable appliances and luminaires.

553.2 Cable couplers

553.2.1 Except for a SELV or a Class II circuit, a cable coupler shall comply where appropriate with BS 6991, IEC 61535, IEC 60309-2 or IEC 60320-1, shall be non-reversible and shall have provision for the connection of a protective conductor.

553.2.2 A cable coupler shall be arranged so that the connector of the coupler is fitted at the end of the cable remote from the supply.

553.3L Lamp Holders

553.3.1L Except where the lampholder and its wiring are enclosed in earthed metal or insulating material having the ignitability characteristic 'P' as specified in BS 476-12 or where separate overcurrent protection is provided, a lampholder shall not be connected to any circuit where the rated current of the overcurrent device exceeds the appropriate value stated in Table 55.2L.

Table 55.2L – Overcurrent protection of lampholders

Type of lampholder			Maximum rating (amperes) of overcurrent protection device protecting the circuit
Bayonet (IEC 61184):	B15	SBC	6
	B22	BC	16
Edison screw (IEC 60238):	E14	SES	6
	E27	ES	16
	E40	GES	16

COPYRIGHT

554 Current-using equipment

554.1 Electrode water heaters and boilers

554.1.1 Every electrode water heater and electrode boiler shall be connected to an a.c. system only, and shall be selected and erected in accordance with the appropriate requirements of this section.

554.1.2L The supply to the electrode water heater or electrode boiler shall be controlled by a linked circuit-breaker arranged to disconnect the supply from all electrodes simultaneously and provided with an overcurrent protective device in each conductor feeding an electrode. Where the circuit breaker is remote from the heater or boiler, indicating lamps shall be provided adjacent to or mounted on the boiler, to indicate whether the circuit-breaker is in the ON or OFF position.

554.1.3L The earthing of the electrode water heater or electrode boiler shall comply with the requirements of Chapter 54 and, in addition, the shell of the electrode water heater or electrode boiler shall be bonded to the metallic sheath and armour, if any, of the incoming supply cable. The protective conductor shall be connected to the shell of the electrode water heater or electrode boiler and shall comply with 543.1.1L.

554.1.4 Where an electrode water heater or electrode boiler is directly connected to a supply at a voltage exceeding low voltage, the installation shall include an RCD arranged to disconnect the supply from the electrodes on the occurrence of a sustained earth leakage current in excess of 10% of the rated current of the electrode water heater or electrode boiler under normal conditions of operation, except that if in any instance a higher value is essential to ensure stability of operation of the electrode water heater or electrode boiler, the value may be increased to a maximum of 15%. A time delay may be incorporated in the device to prevent unnecessary operation in the event of imbalance of short duration.

554.1.5L Where an electrode water heater or electrode boiler is connected to a three-phase low voltage supply, the shell of the electrode water heater or electrode boiler shall be connected to the neutral of the supply as well as to the earthing conductor. The current-carrying capacity of the neutral conductor shall be not less than that of the largest line conductor connected to the equipment.

554.1.6L Except as provided by 554.1.7L, where the supply to an electrode water heater or electrode boiler is single-phase and one electrode is connected to a neutral conductor earthed by the supplier, the shell of the electrode water heater or electrode boiler shall be connected to the neutral of the supply as well as to the earthing conductor.

554.1.7L Where the electrode water heater or electrode boiler is not piped to a water supply or in physical contact with any earthed metal, and where the electrodes and the water in contact with the electrodes are so shielded in insulating material that they cannot be touched while the electrodes are live, a fuse in the phase conductor may be substituted for the circuit-breaker required under 554.1.2L and the shell of the electrode water heater or electrode boiler need not be connected to the neutral of the supply.

554.1.8L Only closed water heaters approved under the Consumer Protection (Safety Requirements) Registration Scheme (or CPS Scheme) of the Safety Authority, namely incorporating with required water pressure, pressure-relief devices, thermal cut-out, thermostat, shall be installed.

NOTE – Closed water heater is a Controlled Goods regulated under the CPS Scheme. It is a requirement under the CPS Scheme that closed water heaters having a rated pressure of 0.6 MPa and above shall be provided with a pressure-relief device. Pressure-relief devices shall prevent the pressure in the container from exceeding the rated pressure by more than 0.1 MPa. Closed water heaters shall incorporate a thermal cut-out providing all-pole disconnection and which operates independently from the thermostat.

COPYRIGHT

554.2 Heaters for liquids or other substances having immersed heating elements

554.2.1 Every heater for liquid or other substance shall incorporate or be provided with an automatic device to prevent a dangerous rise in temperature.

554.3 Water heaters having immersed and uninsulated heating elements

554.3.1L Every single-phase water heater or boiler having an uninsulated heating element immersed in the water shall be prohibited.

554.4 Reserved for future use

554.5 Reserved for future use

555 Transformers

555.1 Autotransformers and step-up transformers

555.1.1 Where an autotransformer is connected to a circuit having a neutral conductor, the common terminal of the winding shall be connected to the neutral conductor.

555.1.2 Reserved for future use

555.1.3 Where a step-up transformer is used, a linked switch shall be provided for disconnecting the transformer from all live conductors of the supply.

556 Reserved for future use

557 Auxiliary Circuits

557.1 Scope

This section applies to auxiliary circuits, except those covered by specific product or system standards, e.g. the construction of assemblies of electrical equipment to the appropriate part of the IEC 61439 series.

557.2 Reserved for future use

557.3 Requirements for auxiliary circuits

557.3.1 General

The power supply, a.c. or d.c., for an auxiliary circuit may be either dependent or independent of the main circuit according to its required function. If the status of the main circuit has to be signalled, then the signaling circuit shall be able to operate independently of that main circuit.

557.3.201 Control circuits

A control circuit shall be designed, arranged and protected to limit dangers resulting from a fault between the control circuit and other conductive parts liable to cause malfunction (e.g. inadvertent operation) of the controlled equipment.

COPYRIGHT

557.3.2 Power supply for auxiliary circuits dependent on the main circuit

557.3.2.1 General

Auxiliary circuits with a power supply dependent on the main a.c. circuit shall be connected to the main circuit:

(i) directly (see Figure 55.1) or

(ii) via a rectifier (see Figure 55.2) or

(iii) via a transformer (see Figure 55.3)

It is recommended that auxiliary circuits supplying primarily electronic equipment or systems should not be supplied directly but at least via simple separation from the main circuit.

Figure 55.1 – Auxiliary circuit supplied directly from the main circuit

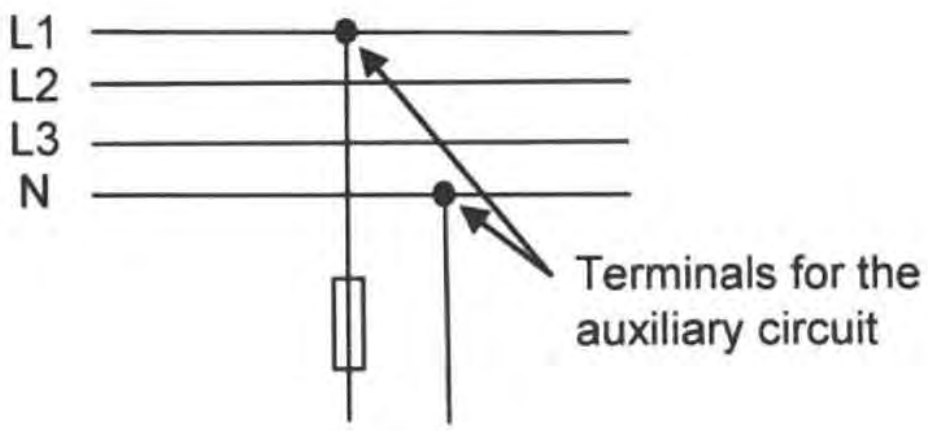

Figure 55.2 – Auxiliary circuit supplied from the main circuit via a rectifier

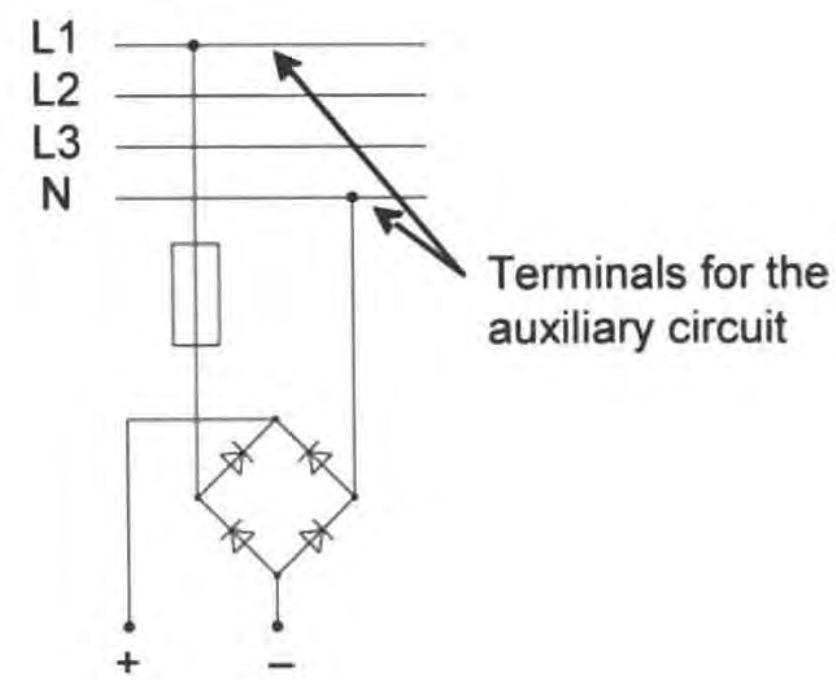

COPYRIGHT

Figure 55.3 – Auxiliary circuit supplied from the main circuit via a transformer

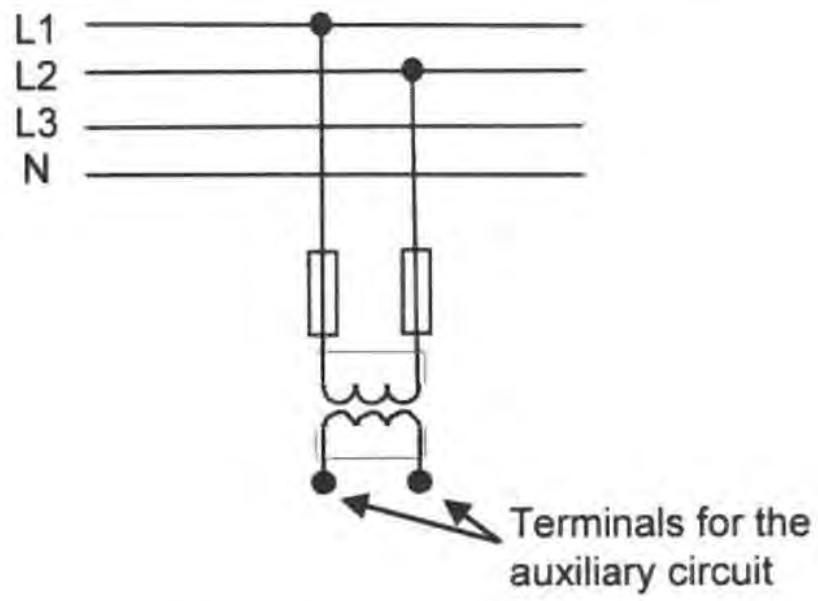

NOTE – For an auxiliary circuit supplied from the main circuit, either directly or via a rectifier, the auxiliary circuit begins at the connection point to the main circuit, see Figures 55.1 and 55.2. In the case of a transformer supply, the auxiliary circuit begins on the secondary side of the transformer, see Figure 55.3

557.3.2.2 Auxiliary circuit supplied from the main circuit via transformer

When an auxiliary circuit is supplied by more than one transformer, they shall be connected in parallel both on the primary and secondary sides.

557.3.3 Auxiliary circuit supplied by an independent source

Where an independent source is used a loss of supply or undervoltage of the main circuit source shall be detected. An independent auxiliary circuit shall not create a hazardous situation.

NOTE – Batteries and a power supply system independent of the mains are examples of independent sources.

557.3.4 Auxiliary circuit with or without connection to earth

557.3.4.1L General

An auxiliary circuit shall comply with the earthing requirements of SS 551 except as modified by 557.3.4.2 or 557.3.4.3.

NOTE 1 – It depends on the requirements for an auxiliary circuit as to whether it is operated earthed or unearthed. For example, in an earthed auxiliary circuit an earth fault in a non-earthed conductor leads to disconnection of the power supply of the auxiliary circuit. In an unearthed auxiliary circuit, an earth fault in a conductor leads only to a signal from the IMD (see 557.3.4.3)

NOTE 2 – The use of unearthed auxiliary circuits should be considered where high reliability is required.

557.3.4.2 Earthed auxiliary circuit

An earthed auxiliary circuit supplied via a transformer shall be connected to earth only at one point on the secondary side of the transformer. The connection to earth shall be situated close to the transformer. The connection shall be easily accessible and capable of being isolated for insulation measurement.

COPYRIGHT

557.3.4.3 Unearthed auxiliary circuit

Except in the case of a SELV or PELV circuit, if an auxiliary circuit is operated unearthed via a transformer, an insulation monitoring device (IMD) according to IEC 61557-8 shall be installed on the secondary side. Consideration shall be given to the use of risk assessment to determine whether the signal from the IMD is to initiate an acoustic and/or a flash alarm, or be transmitted to a monitoring system.

557.3.5 Power supplies for auxiliary circuits

557.3.5.1 General

The rated voltage of the auxiliary circuit, and the components used in the circuit, shall be compatible with the supply to that circuit.

NOTE 1 – If the supply voltage is too low for the design of the circuit then the operation will not be reliable for the proper function of relays.

Account shall be taken of the effects of voltage drop on the electrical equipment of the auxiliary circuit including inrush and starting currents.

NOTE 2 – Motors starting direct-on-line can draw a starting current from the main circuit that will reduce the supply voltage to an auxiliary circuit dependent on the main circuit, below the minimum operating voltage of the associated switchgear.

557.3.5.2 Standby power supply or power supply for safety services

Where a standby power supply or a power supply from a generating set is used to supply auxiliary circuits, the frequency variation shall be taken into account.

557.3.5.3L AC supply

The nominal voltage of control circuits shall preferably not exceed 230 V for circuit with 50 Hz nominal frequency, taking into account voltage tolerances according to IEC 60038.

NOTE – The dimensioning of cable length with respect to the conductor capacitances, e.g. connection to a limit switch needs to be coordinated with the selected relays or solenoid valves. The standing voltage caused by high conductor capacitances may impair the switching off of relays or solenoid valves.

557.3.5.4 DC supply

557.3.5.4.1L Supply by a power system

The nominal voltage of control circuits shall preferably not exceed 110 V.

557.3.5.4.2 Supply by batteries

Where batteries are used as a power supply for auxiliary circuits, the voltage fluctuation due to charging or discharging shall not exceed voltage tolerances specified in IEC 60038, unless the auxiliary circuit is specifically designed to compensate for such voltage fluctuation.

557.3.6 Protective measures

557.3.6.1 Protection of wiring systems

NOTE 1 – In the case of extended auxiliary circuits it is necessary to ensure that the required operating current of the protective device will be achieved also at the far end of the respective cables or conductors (see 433.1).

COPYRIGHT

Single-phase earthed a.c. auxiliary circuits supplied on the secondary side of the transformer for an auxiliary supply and earthed d.c auxiliary circuits are permitted to be protected by single-pole devices. The protective devices shall only be inserted in conductors which are not connected directly to the earth.

In unearthed a.c. or d.c. auxiliary circuits, short-circuit protection shall be provided for all line conductors.

NOTE 2 – The use of protective devices which disconnect all lines of an unearthed auxiliary circuit will aid fault diagnosis and maintenance activities.

If the short-circuit protective device on the primary side of the transformer for an auxiliary circuit is selected so that is also protects against short-circuit current on the secondary side, a protective device on the secondary side of the transformer may be omitted.

NOTE 3 – For a fault on the transformer secondary side, the magnitude of the short-circuit current on the primary side depends also on the impedance of the transformer.

557.3.6.2 Protection against short-circuit

Switching contacts of electrical switching devices of the auxiliary circuit shall be protected against damage caused by short-circuit currents, according to the manufacturer's instruction.

557.4 Characteristics of cables and conductors

557.4.1 Minimum cross-sectional areas

In order to ensure adequate mechanical strength, the following minimum cross-sectional areas indicated in Table 55 shall be met. If there are special mechanical strength requirements for cables or conductors, then a larger cross-sectional area of conductor, selected in accordance with Chapter 52, may be required.

Table 55 – Minimum cross-sectional area of copper conductors in mm^2

Application	Type of cable				
	Single-core		Two-core		Multicore
	Single-wire	Stranded	Screened	Unscreened	Screened or unscreened
Control circuits[a]	0.5	0.5	0.5	0.5	0.1
Data transfer	-	-	-	-	0.1
[a] Other auxiliary circuits may need a larger cross-sectional area of copper conductor, e.g. for measuring.					

NOTE – The cross-sectional area of copper conductors is derived from Section 524

557.5 Requirements for auxiliary circuits used for measurement

557.5.1 General

Measuring circuits are auxiliary circuits with dedicated requirements which are given in the following clauses.

COPYRIGHT

557.5.2L Auxiliary circuits for direct measurement of electrical quantities

An auxiliary circuit for direct measurement of electrical quantities shall be protected against the effects of a fault by one of the following means:

(i) Provision of a device for protection against fault current in accordance with Section 434. Where operation of the device could cause danger, or lead to a hazardous situation, such operation shall also cause disconnection of the main circuit.

(ii) Simultaneous fulfilment of conditions (a) and (b) of 434.3.

557.5.3 Auxiliary circuits for measurement of electrical quantities via a transformer

557.5.3.1 Current transformer

Where a measurement device is connected to the main circuit via a current transformer, the following requirements shall be taken into account.

(i) The secondary side of the transformer in a low voltage installation shall not be earthed, except where the measurement can only be carried out with a connection to earth

(ii) Protective devices interrupting the circuit shall not be used on the secondary side of the transformer

(iii) Conductors on the secondary side of the transformer shall be insulated for the highest voltage of any live parts or shall be installed such that their insulation cannot come into contact with other live parts, e.g. contact with busbars

(iv) Terminals for temporary measurements shall be provided.

The above requirements do not apply to summation current transformers where hazardous voltages do not occur, e.g. equipment for insulation fault location according to IEC 61557-9.

557.5.3.2 Voltage transformer

The secondary side of a voltage transformer shall be protected by a short-circuit protective device.

557.6 Functional considerations

557.6.1 Voltage supply

Where loss of voltage, i.e. voltage fluctuation, overvoltage or undervoltage, could cause the auxiliary circuit to be unable to perform its intended function, means to ensure continued operation of the auxiliary circuit shall be provided.

557.6.2 Quality of signals depending on the cable characteristics

The operation of an auxiliary circuit shall not be adversely affected by the characteristics, including impedance and length, of the cable between operational components.

The capacitance of the cable shall not impair the proper operation of an actuator in the auxiliary circuit. The cable characteristics and length shall be taken into account for the selection of switchgear and controlgear or electronic circuits.

NOTE – For an extensive auxiliary circuit, the use of a d.c. power supply or bus-system is recommended.

COPYRIGHT

557.6.3 Measures to avoid the loss of functionality

An auxiliary circuit serving a special function where reliability is a concern will require additional design considerations to minimise the likelihood of wiring faults. These wiring faults could result in loss of function and/or loss of signal. Among the design considerations are

(i) selection of appropriate installation methods for cables

(ii) selection of equipment where a fault from line to exposed-conductive-parts is not possible, e.g. Class II equipment.

(iii) use of installation methods and equipment that are inherently short-circuit and earth fault proof

For the design of installations and equipment that are inherently short-circuit and earth fault proof, the following shall be considered.

(a) Arrangements of single conductors with basic insulation, together with measures to prevent mutual contact and contact with exposed-conductive-parts. This may be achieved by:

- installation in (insulated) cable trunking systems, or
- installation in (insulated) conduit

(b) Arrangements of

- single-core cables, or
- single-core, non-metallic-sheathed cables, or
- rubber-insulated flexible cables

(c) Provision of protection against mechanical damage and of safe distance from flammable material for non-metallic sheathed cables

(d) Arrangements of non-metallic-sheathed cables with nominal voltage U_0/U at least 0.6/1 kV (U_0 = conductor to earth voltage, U = conductor to conductor voltage)

(e) Use of cables with an insulation which is self-extinguishing and flame-retardant

(f) Use of cables that are afforded physical protection by being buried, e.g. installation of cables in soil or concrete.

557.6.4 Current-limiting signal outputs

In earthed or unearthed auxiliary circuits with current-limiting signal outputs or electronically controlled protection against short-circuit conditions, respectively, the signal circuit shall be disconnected within 5 s if the respective measure operates. In special cases, a shorter disconnection time may be required.

For current-limiting signal outputs or electronically controlled protection of the signal output, respectively, automatic disconnection of supply may be omitted if a hazardous situation is not likely to occur.

COPYRIGHT

557.6.5 Connection to the main circuit

557.6.5.1L Auxiliary circuits without direct connection to the main circuit

Electrical actuators, e.g. actuating relays, contactors, signaling lights, electromagnetic locking devices, shall be connected to the common conductor (see Figure 55.4):

(i) in earthed auxiliary circuits, at the earthed (common) conductor

(ii) in unearthed auxiliary circuits, at the common conductor.

Figure 55.4 – Configuration of an auxiliary circuit

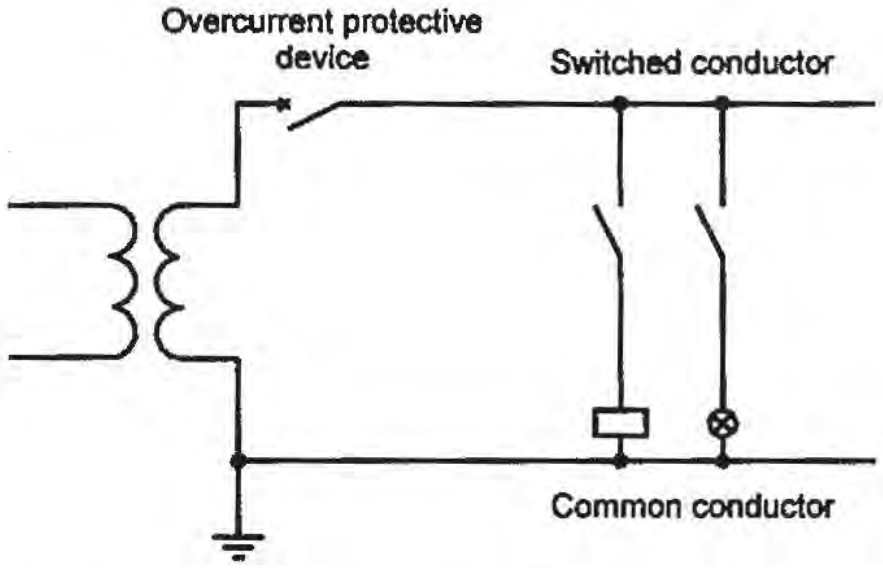

Exception: Switching elements of protective relays, e.g. overcurrent relays, which may be installed between the earthed or the non-earthed conductor and a coil, provided that

(i) this connection is contained inside a common enclosure, or

(ii) it leads to a simplification of external control devices, e.g. conductor bars, cable drums, multiple connectors, and taking into account the requirements of 557.3.6.2.

557.6.5.2L Auxiliary circuits with direct connection to the main circuit

If the auxiliary circuit is:

(i) supplied between two line conductors, two-pole switching contacts shall be used;

(ii) connected to the earthed neutral of the main circuit, the requirements of Chapter 43 apply.

557.6.6 Plug-in connections

Interchangeability between multiple plug-in connections is permitted only where it will not result in mechanical damage or introduce a risk of fire, electric shock or injury to persons.

NOTE 1 – These plug-in connections form a part of the auxiliary circuit(s) and may conduct different signals.

NOTE 2 – Protection against interchangeability may be achieved by marking, polarisation, design or electronic interlocking

The connector shall be secured by a means to prevent unintended disconnection.

COPYRIGHT

558 Reserved for future use

559 Luminaires and lighting installations

559.1 Scope

This section applies to the selection and erection of luminaires and lighting installations intended to be part of the fixed installation.

NOTE 1 – For outdoor lighting installations, extra-low voltage lighting installations and lighting installations in special locations, refer to Part 7.

The requirements of this section do not apply to:

(i) high voltage signs supplied at low voltage (such as neon tubes)

(ii) signs and luminous discharge tube installations operating from a no-load rated output voltage exceeding 1 kV but not exceeding 10 kV (BS EN 50107).

NOTE 2 – The requirements for high voltage signs are given in BS 559 and the BS EN 50107 series.

559.2 Reserved for future use

559.3 General requirements for installations

NOTE – See Table 55.3 for an explanation of the symbols used in luminaires, in controlgear for luminaires and in the installation of luminaires.

559.3.1 Every luminaire shall comply with the relevant standard for manufacture and test of that luminaire and shall be selected and erected to take account of the manufacturer's instructions.

559.3.2 For the purposes of this section, luminaires without transformers or convertors but which are fitted with extra-low voltage lamps connected in series to a low voltage supply shall be considered as low voltage equipment and not extra-low voltage equipment. These luminaires shall be either Class I or Class II equipment.

559.3.3 Where a luminaire is installed in a pelmet, there shall be no adverse effects due to the presence or operation of curtains or blinds.

559.3.4 A track system for luminaires shall comply with the requirements of IEC 60570.

559.4 Protection of the surroundings against thermal effects

559.4.1 General

In the selection and erection of a luminaire the thermal effects of radiant and convected energy on the surroundings shall be taken into account, including:

(i) the maximum permissible power dissipated by the lamps.

(ii) the fire-resistance of adjacent material

- at the point of installation, and
- in the thermally affected areas.

COPYRIGHT

(iii) the minimum distance to combustible materials, including material in the path of a spotlight beam.

(iv) the relevant markings on the luminaire.

559.5 Wiring systems

559.5.1 Connection to the fixed wiring

At each fixed lighting point one of the following shall be used:

(i) A ceiling rose to BS 67

(ii) A luminaire supporting coupler to BS 6972 or BS 7001

(iii) A batten lampholder or a pendant set to IEC 60598

(iv) A luminaire to IEC 60598

(v) A suitable socket-outlet to SS 145-2, SS 472 or IEC 60309-2

(vi) A plug-in lighting distribution unit to SS 241

(vii) A connection unit to SS 403

(viii) Appropriate terminals enclosed in a box complying with the relevant part of IEC 60670 series or BS 4662

(ix) A device for connecting a luminaire (DCL) outlet according to IEC 61995-1

(x) An installation coupler to IEC 61535.

NOTE – In suspended ceilings one plug-in lighting distribution unit may be used for a number of luminaires.

559.5.1.201 A ceiling rose or lampholder shall not be installed in any circuit operating at a voltage normally exceeding 250 V.

559.5.1.202 A ceiling rose shall not be used for the attachment of more than one outgoing flexible cable unless it is specially designed for multiple pendants.

559.5.1.203 Luminaire supporting couplers and devices for the connection of luminaires are designed specifically for the electrical connection of luminaires and shall not be used for the connection of any other equipment.

559.5.1.204 Lighting circuits incorporating B15, B22, E14, E27 or E40 lampholders shall be protected by an overcurrent protective device of maximum rating 16 A.

559.5.1.205 Bayonet lampholders B15 and B22 shall comply with IEC 61184 and shall have the temperature rating T2 described in that standard.

559.5.1.206L In circuits of a TN or TT system, the outer contact of every Edison screw or single centre bayonet cap type lampholder shall be connected to the neutral conductor. This clause also applies to track mounted systems.

559.5.1.207 A lighting installation shall be appropriately controlled.

NOTE – See Table 53.4L for guidance on the selection of suitable protective, isolation and switching devices.

COPYRIGHT

559.5.1.208 Consideration shall be given to the provinces of the neutral conductor, at each switch position, to facilitate the installation of electronic switching devices.

559.5.2 Fixing of luminaires

Adequate means to fix luminaires shall be provided.

The fixing means may be mechanical accessories (e.g. hooks or screws), boxes or enclosures which are able to support luminaires or supporting devices for connecting a luminaire.

In places where the fixing means is intended to support a luminaire, the fixing means shall be capable of carrying a mass of not less than 5 kg. If the mass of the luminaire is greater than 5 kg, the installer shall ensure that the fixing means is capable of supporting the mass of the luminaire.

The installation of the fixing means shall be in accordance with the manufacturer's instructions.

The weight of luminaires and their eventual accessories, e.g. shades, shall be compatible with the mechanical capability of the ceiling or suspended ceiling or supporting structure where installed.

Any flexible cable between the fixing means and the luminaire shall be installed so that any expected stresses in the conductors, terminals and terminations will not impair the safety of the installation. See also Table 4H1A of Appendix 4(L).

559.5.3 Through wiring

559.5.3.1 The installation of through wiring in a luminaire is only permitted if the luminaire is designed for such wiring.

559.5.3.2 A cable for through wiring shall be selected in accordance with the temperature information on the luminaire or on the manufacturer's instruction sheet, if any, as follows:

(i) For a luminaire complying with IEC 60598 but with temperature marking, cables suitable for the marked temperature shall be used.

(ii) Unless specified in the manufacturer's instructions, for a luminaire complying with IEC 60598 but with no temperature marking, heat-resistant cables are not required.

(iii) In the absence of information, heat-resistant cables and/or insulated conductors of type H05S-U, H05S-K, H05SJ-K, H05SS-K (BS EN 50525) or equivalent shall be used.

559.5.4 Devices for connection of luminaires to the supply

If the luminaire does not provide a connecting device for connection to the supply, the connecting device shall be:

(i) terminals according to IEC 60998, or

(ii) a device for connecting a luminaire (DCL) plug according to IEC 61995, or

(iii) an installation coupler according to IEC 61535, or

(iv) supporting coupler (LSC) plug according to BS 6972 or BS 7001, or

(v) a male connector (plug) of a plug-in lighting distribution unit according to SS 241, or

(vi) another suitable and appropriate connecting device.

NOTE – For the installation of supply cables, see also 522.2.201.

COPYRIGHT

559.5.5 Groups of luminaires

Groups of luminaires divided between the line conductors of a polyphase circuit with only one common neutral conductor shall be provided with at least one device disconnecting simultaneously all line conductors.

NOTE – See also Section 536.

559.5.6 Protection against heat and UV radiation effects within luminaires

External cables and cores of cables connected within a luminaire or passing through shall be so selected and erected that they will not suffer damage or deterioration due to heat and UV radiation generated by the luminaire or its lamps (e.g. shielding of the cable from heat and/or UV by means of heat/UV-resistant sleeving).

559.6 Independent lamp controlgear, e.g. ballasts

Only independent lamp controlgear marked as suitable for independent use, according to the relevant standard, shall be used external to a luminaire.

Only the following are permitted to be mounted on a flammable surface:

(i) A "class P" thermally protected ballast/transformer

(ii) A temperature declared thermally protected ballast/transformer.

NOTE – For an explanation of symbols used, see Table 55.3.

559.7 Compensation capacitors

Compensation capacitors having a total capacitance exceeding 0.5 µF shall only be used in conjunction with discharge resistors. Capacitors and their marking shall be in accordance with IEC 61048.

This requirement does not apply to capacitors forming part of the equipment.

559.8 Protection against electric shock for display stands for luminaires

Protection against electric shock for circuits supplying display stands for luminaires shall be provided by either:

(i) a SELV or PELV supply, or

(ii) a residual current device having a rated residual operating current not exceeding 30 mA which provides both automatic disconnection of supply according to Section 411 and additional protection according to 415.1.

559.9 Stroboscopic effect

In the case of lighting for premises where machines with moving parts are in operation, consideration shall be given to stroboscopic effects which can give a misleading impression of moving parts being stationary. Such effects may be avoided by selecting luminaires with suitable lamp controlgear, such as high frequency controlgear, or by distributing lighting loads across all the phases of a polyphase supply.

559.10 Reserved for future use

559.11 Reserved for future use

COPYRIGHT

Table 55.3 – Explanation of symbols used in luminaires, in controlgear for luminaires and in the installation of luminaires

IEC 60598-1 : 2014		IEC 60598-1 : 2014	
	Luminaire suitable for direct mounting on normally flammable surfaces		Recessed luminaire not suitable for direct mounting on normally flammable surfaces
	Luminaire suitable for direct mounting on non-combustible surfaces only		Surface mounted luminaire not suitable for direct mounting on normally flammable surfaces
	Luminaire suitable for direct mounting in/on normally flammable surfaces when thermally insulating material may cover the luminaire		Luminaire not suitable for covering with thermally insulating material

NOTE: Luminaires suitable for direct mounting on normally flammable surfaces may be marked with the symbol shown according to IEC 60598-1:2014.

With the publication of IEC 60598-1 : 2014, luminaires suitable for direct mounting on normally flammable surfaces have no special marking and only luminaires not suitable for mounting on normally flammable surfaces are marked with a symbol (see annex N.4 of IEC 60598-1 : 2014 for further explanations).



Recessed



Surface

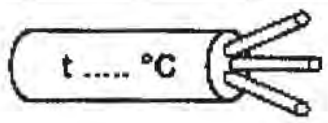	Use of heat-resistant supply cables, interconnecting cables, or external wiring (number of conductors of cable is optional) (IEC 60598 series)		Luminaire for use with high pressure sodium lamps that require an external ignitor (IEC 60598 series)
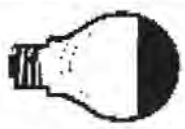	Luminaire designed for use with bowl mirror lamps (IEC 60598 series)		Luminaire for use with high pressure sodium lamps having an internal starting device (IEC 60598 series)
ta .... °C	Rated maximum ambient temperature (IEC 60598 series)		Luminaire with limited surface temperature (IEC 60598-2-24)
	Warning against the use of coolbeam lamps (IEC 60598 series)		Short-circuit proof (inherently or non-inherently) safety isolating transformer (IEC 61558-2-6)
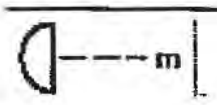	Minimum distance from lighted objects (metres) (IEC 60598 series)	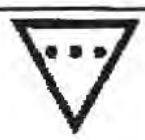	Temperature declared thermally protected lamp controlgear (replaced by temperature) (IEC 61347-1)
	Rough service luminaire (IEC 60598 series)		Electronic convertor for an extralow voltage lighting installation
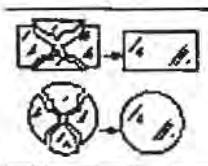	Replace any cracked protective screen (IEC 60598 series)		Thermally protected lamp controlgear (class P) (IEC 61347-1)
	Luminaire designed for use with self-shielded tungsten halogen lamps or self-shielded metal halide lamps only (IEC 60598 series)		Independent ballast IEC 60417 sheet No. 5138

COPYRIGHT

CHAPTER 56

SAFETY SERVICES

560.1 Scope

This chapter covers general requirements for safety services, selection and erection of electrical supply systems for safety services and electrical safety sources. Standby electrical supply systems are outside the scope of this chapter. This chapter does not apply to installations in hazardous areas (BE3), for which requirements are given in IEC 60079-14.

NOTE – Examples of safety services include (this list is not exhaustive):

- Emergency lighting
- Fire pumps for sprinklers, wet risers, hydrant systems, etc.
- Fire and evacuation lifts
- Fire detection and alarm systems
- Smoke ventilation systems
- Emergency voice communication system
- Essential medical systems
- Industrial safety systems.

560.2 Reserved for future use

560.3 Reserved for future use

560.4 Classification

560.4.1 An electrical safety service supply is either:

(i) a non-automatic supply, the starting of which is initiated by an operator, or

(ii) an automatic supply, the starting of which is independent of an operator.

An automatic supply is classified as follows, according to the maximum changeover time:

(iii) No-break: an automatic supply which can ensure a continuous supply within specified conditions during the period of transition, for example as regards variations in voltage and frequency

(iv) Very short break: an automatic supply available within 0.15 s

(v) Short break: an automatic supply available within 0.5 s

(vi) Normal break: an automatic supply available within 5 s

(vii) Medium break: an automatic supply available within 15 s

(viii) Long break: an automatic supply available in more than 15 s.

560.4.2 The essential equipment for safety services shall be compatible with the changeover time in order to maintain the specified operation.

COPYRIGHT

560.5 General

560.5.1 Safety services may be required to operate at all relevant times including during mains and local supply failure and through fire conditions. To meet this requirement specific sources, equipment, circuits and wiring are necessary. Some applications also have particular requirements, as in 560.5.2 and 560.5.3L.

560.5.2 For safety services required to operate in fire conditions, the following two conditions shall be fulfilled:

(i) An electrical source for safety supply shall be so selected as to maintain a supply of adequate duration, and

(ii) all equipment of safety services shall be so provided, either by construction or by erection, with protection ensuring fire-resistance of adequate duration.

NOTE – The safety source is generally additional to the normal source. The normal source is, for example, the public supply network.

560.5.3L Where automatic disconnection of supply is used as a protective measure against electric shock, non- disconnection on the first fault is preferred.

560.5.4 A failure in the control or bus system of a normal installation shall not adversely affect the function of safety services.

560.6 Electrical sources for safety services

560.6.1 The following electrical sources for safety services are recognised:

(i) Storage batteries

(ii) Primary cells

(iii) Generator sets independent of the normal supply

(iv) A separate feeder of the supply network that is effectively independent of the normal feeder.

560.6.2 Safety sources for safety services shall be installed as fixed equipment and in such a manner that they cannot be adversely affected by failure of the normal source.

560.6.3 Safety sources shall be installed in a suitable location and be accessible only to skilled or instructed persons (BA5 or BA4).

560.6.4 The location of the safety source shall be properly and adequately ventilated so that exhaust gases, smoke or fumes from the safety source cannot penetrate areas occupied by persons.

560.6.5L Separated independent feeders from a supplier's network shall not serve as electrical sources for safety services unless assurance can be obtained that the two supplies are unlikely to fail concurrently.

560.6.6 The safety source shall have sufficient capability to supply its related safety service.

560.6.7 A safety source may, in addition, be used for purposes other than safety services, provided the availability for safety services is not thereby impaired. A fault occurring in a circuit for purposes other than safety services shall not cause the interruption of any circuit for safety services.

COPYRIGHT

560.6.8L Special requirements for safety services having sources not capable of operation in parallel

560.6.8.1 Adequate precautions shall be taken to avoid the paralleling of sources.

NOTE – This may be achieved by mechanical interlocking.

560.6.8.2 Short-circuit protection and fault protection shall be ensured for each source.

560.6.9L Special requirements for safety services having sources capable of operation in parallel

Short-circuit protection and fault protection shall be ensured when the installation is supplied separately by either of the two sources or by both in parallel.

NOTE 1 – The parallel operation of a private source with the public supply network is subject to authorisation by the transmission licencee. This may require special devices, for example to prevent reverse power. Refer also to Section 551.

NOTE 2 – Precautions may be necessary to limit current circulation in the connection between the neutral points of the sources, in particular the effect of triplen harmonics.

560.6.10L Central power supply sources

Batteries shall be of vented or valve-regulated maintenance-free type and shall be of heavy duty industrial design, for example cells complying with IEC 60623 or the appropriate part of the IEC 60896 series.

NOTE – The minimum design life of the batteries at 20 °C should be 10 years.

560.6.11L Low power supply sources

The power output of a low power supply system is limited to 500 W for 3-hour duration and 1500 W for a 1-hour duration. Batteries shall be of heavy duty industrial design, for example cells complying with IEC 60623 or the appropriate part of the IEC 60896 series are suitable.

NOTE – The minimum design life of the batteries at 20 °C should be 5 years.

560.6.12L Uninterruptible power supply sources (UPS)

Where an uninterruptible power supply is used, it shall:

(i) be able to operate distribution circuit protective devices, and

(ii) be able to start the safety devices when it is operating in the emergency condition from the inverter supplied by the battery, and

(iii) comply with the requirements of 560.6.10L, and

(iv) comply with IEC 62040-1 and IEC 62040-3, as applicable.

560.6.13L Generator sets for safety services

Where a generating set is used as a safety source, it shall comply with ISO 8528-12.

560.6.14 Monitoring of safety sources

The condition of the source for safety services (ready for operation, under fault conditions, feeding from the source for safety services) shall be monitored.

COPYRIGHT

560.7 Circuits of safety services

560.7.1 Circuits of safety services shall be independent of other circuits.

NOTE – This means that any electrical fault or any intervention or modification in one system should not affect the correct functioning of the other. This may necessitate separation by fire-resistant materials or different routes or enclosures.

560.7.2 Circuits of safety services shall not pass through locations exposed to fire risk (BE2) unless they are fire-resistant. The circuits shall not, in any case, pass through zones exposed to explosion risk (BE3).

NOTE – Where practicable, the passage of circuits through locations presenting a fire risk should be avoided.

560.7.3 In accordance with 433.3.3, protection against overload may be omitted where the loss of supply may cause a greater hazard. Where protection against overload is omitted, the occurrence of an overload shall be monitored.

560.7.4 Overcurrent protective devices shall be selected and erected so as to avoid an overcurrent in one circuit impairing the correct operation of circuits of safety services.

560.7.5 Switchgear and controlgear shall be clearly identified and grouped in locations accessible only to skilled or instructed persons (BA5 or BA4).

560.7.6 In equipment supplied by two different circuits, a fault occurring in one circuit shall not impair the protection against electric shock or the correct operation of the other circuit. Such equipment shall be connected to the protective conductors of both circuits, if necessary.

560.7.7 Safety circuit cables, other than metallic screened fire-resistant cables, shall be adequately and reliably separated by distance or by barriers from other circuit cables, including other safety circuit cables.

NOTE – For battery cables, special requirements may apply.

560.7.8L Circuits for safety services, with the exception of wiring for fire and evacuation lifts, supply cables and wiring for lifts with special requirements (e.g. cable TC, CCTV, etc.), shall not be installed in lift shafts or other flue-like openings.

NOTE – While fire-resistant cables will survive most fires, if they are located in an unstopped vertical shaft the upward air draught in a fire can generate excessive temperatures above the capabilities of the cable so they should be avoided as a route for safety systems.

560.7.9 In addition to a general schematic diagram, full details of all electrical safety sources shall be given. The information shall be maintained adjacent to the distribution board. A single-line diagram is sufficient.

560.7.10 Drawing(s) of the electrical safety installations shall be available showing the exact location of:

(i) all electrical equipment and distribution boards, with equipment designations

(ii) safety equipment with final circuit designation and particulars and purpose of the equipment

(iii) special switching and monitoring equipment for the safety power supply (e.g. area switches, visual or acoustic warning equipment).

COPYRIGHT

560.7.11 A list of all the current-using equipment permanently connected to the safety power supply, indicating the nominal electrical power, rated nominal voltage, current and starting current, together with its duration, shall be available.

NOTE – This information may be included in the circuit diagrams.

560.7.12L Operating instructions for safety equipment and electrical safety services shall be available in the Fire Command Centre and management office. They shall take into account all the particulars of the installation.

560.8 Wiring systems

560.8.1L One or more of the following wiring systems shall be utilised for safety services required to operate in fire conditions:

(i) Mineral insulated cable systems complying with IEC 60702-1 and IEC 60702-2 and IEC 60332-1-2.

(ii) Fire-resistant cables complying with SS 299-1.

(iii) Fire-resistant cables complying with test requirements of BS EN 50200 or BS 8491, appropriate for the cable size and with IEC 60332-1-2.

(iv) A wiring system maintaining the necessary fire and mechanical protection.

The wiring system selected shall meet the requirements of the relevant codes of practice appropriate to the application and shall be mounted and installed in such a way that the circuit integrity will not be impaired during a fire.

NOTE 1 – The codes of practice in the Singapore for emergency lighting, fire alarms and life safety and firefighting applications are as follows:

(i) SS CP 10 (Code of practice for the installation and servicing of electrical fire alarm systems).

(ii) SS CP 52 (Code of practice for automatic fire sprinkler system).

(iii) SS 299-1 (Specification for fire resistant cables – Performance requirements for cables required to maintain circuit integrity under fire conditions).

(iv) SS 546 (Code of practice for emergency voice communication systems in buildings).

(v) SS 563-1 (Code of practice for the design, installation and maintenance of emergency lighting and power supply systems in buildings – Part 1 : Emergency lighting).

(vi) SS 575 (Code of practice for fire hydrant, rising mains and hose reel systems).

NOTE 2 – Examples of a system maintaining the necessary fire and mechanical protection could be:

(i) constructional enclosures to maintain fire and mechanical protection, or

(ii) wiring systems in separate fire compartments.

560.8.2 Wiring for control and bus systems of safety services shall be in accordance with the same requirements as the wiring which is to be used for the safety services. This does not apply to circuits that do not adversely affect the operation of the safety equipment.

560.8.3 Reserved for future use

560.8.4 Circuits for safety services which can be supplied by direct current shall be provided with two-pole overcurrent protection mechanisms.

COPYRIGHT

560.8.5 Switchgear and controlgear used for both a.c. and d.c. supply sources shall be suitable for both a.c. and d.c. operation.

560.9L Emergency lighting system

Emergency lighting systems shall comply with the relevant parts of SS 563 series.

560.10L Fire detection and fire alarm systems

Fire detection and fire alarm systems shall comply with the relevant parts of SS CP 10.

COPYRIGHT

PART 6

INSPECTION AND TESTING

CONTENTS

CHAPTER 61 INITIAL VERIFICATION

610 General

611 Inspection

612 Testing
612.1 General
612.2 Continuity of conductors
612.3 Insulation resistance
612.4 Protection by SELV, PELV or by electrical separation
612.5 Insulation resistance/impedance of floors and walls
612.6L Polarity
612.7 Earth electrode resistance
612.8 Protection by automatic disconnection of the supply
612.9L Earth fault loop impedance
612.10 Additional protection
612.11 Prospective fault current
612.12 Check of phase sequence
612.13 Functional testing
612.14 Verification of voltage drop

CHAPTER 62 PERIODIC INSPECTION AND TESTING

621 General

622 Frequency of inspection and testing

CHAPTER 63 CERTIFICATION AND REPORTING

631 General

632 Reserved for future use

633 Reserved for future use

634 Reserved for future use

COPYRIGHT

PART 6

INSPECTION AND TESTING

CHAPTER 61

INITIAL VERIFICATION

610 General

610.1 Every installation shall, during erection and on completion before being put into service, be inspected and tested to verify, so far as is reasonably practicable, that the requirements of the clause have been met.

Precautions shall be taken to avoid danger to persons and livestock, and to avoid damage to property and installed equipment, during inspection and testing.

610.2L The result of the assessment of the fundamental principles, Section 131, the general characteristics required by Sections 311 to 313, together with the information required by 514.9.1L, shall be made available to the person or persons carrying out the inspection and testing.

610.3 The verification shall include comparison of the results with relevant criteria to confirm that the requirements of this Code have been met.

610.4 For an addition or alteration to an existing installation, it shall be verified that the addition or alteration complies with the clause and does not impair the safety of the existing installation.

610.5 The verification shall be made by a skilled person.

610.6 On completion of the verification, according to 610.1 to 610.5, a certificate shall be prepared.

611 Inspection

611.1 Inspection shall precede testing and shall normally be done with that part of the installation under inspection disconnected from the supply.

611.2 The inspection shall be made to verify that the installed electrical equipment is:

(i) in compliance with the requirements of Section 511 (this may be ascertained by mark or by certification furnished by the installer or the manufacturer), and

(ii) correctly selected and erected in accordance with this Code, taking into account manufacturers' instructions, and

(iii) not visibly damaged or defective so as to impair safety.

611.3 The inspection shall include at least the checking of the following items where relevant, including as appropriate all particular requirements for special installations or locations (see Part 7):

(i) Connection of conductors

(ii) Identification of conductors

COPYRIGHT

(iii) Routing of cables in safe zones, or protection against mechanical damage, in compliance with Section 522

(iv) Selection of conductors for current-carrying capacity and voltage drop, in accordance with the design

(v) Connection of single-pole devices for protection or switching in line conductors only

(vi) Correct connection of accessories and equipment

(vii) Presence of fire barriers, suitable seals and protection against thermal effects

(viii) Methods of protection against electric shock

(a) both basic protection and fault protection, i.e.:

- SELV
- PELV
- Double insulation
- Reinforced insulation

(b) basic protection (including measurement of distances, where appropriate), i.e.:

- protection by insulation of live parts
- protection by a barrier or an enclosure
- protection by obstacles
- protection by placing out of reach

(c) fault protection:

- automatic disconnection of supply
  confirmed for presence and sized in accordance with the design
  - earthing conductor
  - circuit protective conductors
  - protective bonding conductors
  - supplementary bonding conductors
  - earthing arrangements for combined protective and functional purposes

  presence of adequate arrangements for alternative sources(s), where applicable FELV choice and setting of protective and monitoring devices (for fault and/or overcurrent protection)

- non-conducting location (including measurement of distances, where appropriate) absence of protective conductors

- earth-free local equipotential bonding presence of earth-free protective bonding conductors

- electrical separation

(d) additional protection

(ix) Prevention of mutual detrimental influence

(x) Presence of appropriate devices for isolation and switching correctly located

(xi) Presence of undervoltage protective devices

COPYRIGHT

(xii) Labelling of protective devices, switches and terminals

(xiii) Selection of equipment and protective measures appropriate to external influences

(xiv) Adequacy of access to switchgear and equipment

(xv) Presence of danger notices and other warning signs

(xvi) Presence of diagrams, instructions and similar information

(xvii) Erection methods.

612 Testing

612.1 General

The tests of 612.2 to 612.13, where relevant, shall be carried out and the results compared with relevant criteria.

Measuring instruments and monitoring equipment and methods shall be chosen in accordance with the relevant parts of IEC 61557 series. If other measuring equipment is used, it shall provide no less degree of performance and safety.

When undertaking testing in a potentially explosive atmosphere, appropriate safety precautions in accordance with IEC 60079-17 are necessary.

The tests of 612.2 to 612.6L, where relevant, shall be carried out in that order before the installation is energised. Where the installation incorporates an earth electrode, the test of 612.7 shall also be carried out before the installation is energised.

If any test indicates a failure to comply, that test and any preceding test, the results of which may have been influenced by the fault indicated, shall be repeated after the fault has been rectified.

612.2 Continuity of conductors

612.2.1 Continuity of protective conductors, including main and supplementary equipotential bonding

A continuity test shall be made.

612.2.2 Continuity of ring final circuit conductors

A test shall be made to verify the continuity of each conductor, including the protective conductor, of every ring final circuit.

612.3 Insulation resistance

612.3.1 The insulation resistance shall be measured between live conductors and between live conductors and the protective conductor connected to the earthing arrangement. Where appropriate during this measurement, line and neutral conductors may be connected together.

612.3.2L The insulation resistance measured with the test voltages indicated in Table 61 shall be considered satisfactory if the main switchboard and each distribution circuit tested separately, with all its final circuits connected but with current-using equipment disconnected, has an insulation resistance not less than the appropriate value given in Table 61.

COPYRIGHT

Measurements shall be carried out with direct current. The testing apparatus shall be capable of supplying the test voltage indicated in Table 61 when loaded with 1 mA.

NOTE – More stringent requirements are applicable for the wiring of fire detection and fire alarm systems in buildings, see SS CP 10.

Table 61 – Minimum values of insulation resistance

Circuit nominal voltage (V)	Test voltage d.c. (V)	Minimum insulation resistance (MΩ)
SELV and PELV	250	0.5
Up to and including 500 V with the exception of the above systems	500	1.0
Above 500 V	1000	1.0

Table 61 shall be applied when verifying insulation resistance between non-earthed protective conductors and earth.

Where surge protective devices (SPDs) or other equipment are likely to influence the verification test, or be damaged, such equipment shall be disconnected before carrying out the insulation resistance test. Where it is not reasonably practicable to disconnect such equipment (e.g. fixed socket-outlet incorporating an SPD), the test voltage for the particular circuit may be reduced to 250 V d.c., but the insulation resistance shall have a value of at least 1 MΩ.

NOTE 1 – In locations exposed to fire hazard, a measurement of the insulation resistance between the live conductors should be applied. In practice, it may be necessary to carry out this measurement during erection of the installation and before connection of the equipment.

NOTE 2 – Insulation resistance values are usually much higher than those of Table 61.

612.3.3 Where the circuit includes electronic devices which are likely to influence the results or be damaged, only a measurement between the live conductors connected together and the earthing arrangement shall be made.

NOTE – Additional precautions, such as disconnection, may be necessary to avoid damage to electronic devices.

612.3.4 Reserved for future use

612.4 Protection by SELV, PELV or by electrical separation

It shall be verified that the separation of circuits is in accordance with 612.4.1 in the case of protection by SELV, 612.4.2 in the case of protection by PELV and 612.4.3 in the case of protection by electrical separation. The resistance values obtained in the tests of 612.4.1 to 612.4.3 shall be at least that of the circuit with the highest voltage present in accordance with Table 61.

612.4.1 Protection by SELV

The separation of the live parts from those of other circuits and from Earth, according to Section 414, shall be confirmed by a measurement of the insulation resistance. The resistance values obtained shall be in accordance with Table 61.

612.4.2 Protection by PELV

The separation of the live parts from other circuits, according to Section 414, shall be confirmed by a measurement of the insulation resistance. The resistance values obtained shall be in accordance with Table 61.

COPYRIGHT

612.4.3 Protection by electrical separation

The separation of the live parts from those of other circuits and from earth, according to Section 413, shall be confirmed by a measurement of the insulation resistance. The resistance values obtained shall be in accordance with Table 61. In the case of electrical separation with more than one item of current-using equipment, either by measurement or by calculation, it shall be verified that in case of two coincidental faults with negligible impedance between different line conductors and either the protective bonding conductor or exposed-conductive-parts connected to it, at least one of the faulty circuits shall be disconnected. The disconnection time shall be in accordance with that for the protective measure automatic disconnection of supply in a TN system.

612.4.4 Functional extra-low voltage circuits

Functional extra-low voltage circuits shall meet all the test requirements for low voltage circuits.

612.4.5 Basic protection by a barrier or an enclosure provided during erection

Where basic protection is intended to be afforded by a barrier or an enclosure provided during erection in accordance with 416.2, it shall be verified by test that each barrier or enclosure affords a degree of protection not less than IPXXB or IP2X, or IPXXD or IP4X as appropriate, where that clause so requires.

612.5 Insulation resistance/impedance of floors and walls

612.5.1 Where it is necessary to comply with the requirements of 418.1, at least three measurements shall be made in the same location, one of these measurements being approximately 1 m from any accessible extraneous-conductive-part in the location. The other two measurements shall be made at greater distances. The measurement of resistance/impedance of insulating floors and walls is carried out with the system voltage to earth at nominal frequency. The above series of measurements shall be repeated for each relevant surface of the location.

NOTE – Further information on measurement of the insulation resistance/impedance of floors and walls can be found in Appendix 13.

612.5.2 Any insulation or insulating arrangement of extraneous-conductive-parts intended to satisfy 418.1.4(iii):

(i) when tested at 500 V d.c. shall be not less than 1 megohm, and

(ii) shall be able to withstand a test voltage of at least 2 kV a.c. rms, and

(iii) shall not pass a leakage current exceeding 1 mA in normal conditions of use.

612.6L Polarity

A test of polarity shall be made and it shall be verified that:

(i) every fuse and single-pole control and protective device is connected in the line conductor only, and

(ii) centre contact bayonet and Edison screw lampholders have the outer or screwed contacts connected to the neutral conductor, and

(iii) wiring has been correctly connected to socket-outlets and similar accessories.

COPYRIGHT

612.7 Earth electrode resistance

Where the earthing system incorporates an earth electrode as part of the installation, the electrode resistance to Earth shall be measured.

NOTE – Where a measurement of RA is not practicable the measured value of external earth fault loop impedance may be used.

612.8 Protection by automatic disconnection of the supply

Where RCDs are applied also for protection against fire, the verification of the conditions for protection by automatic disconnection of the supply may be considered as satisfying the relevant requirements of Chapter 42.

612.8.1 General

The verification of the effectiveness of the measures for fault protection by automatic disconnection of supply is effected as follows:

(a) TN-S system

Compliance with 411.4L shall be verified by:

(1) measurement of the earth fault loop impedance (see 612.9L)

(2) verification of the characteristics and/or the effectiveness of the associated protective device. This verification shall be made:

- for overcurrent protective devices, by visual inspection (i.e. short-time or instantaneous tripping setting for circuit-breakers, current rating and type for fuses)
- for RCDs, by visual inspection and test. The effectiveness of automatic disconnection of supply by RCDs shall be verified using suitable test equipment according to IEC 61557-6 (see 612.1) to confirm that the relevant requirements in Chapter 41 are met.

The disconnection times required by Chapter 41 shall be verified.

(b) TT system

Compliance with 411.5 shall be verified by:

(1) measurement of the resistance of the earth electrode for exposed-conductive-parts of the installation (see 612.7)

NOTE – Where a measurement of RA is not practicable the measured value of external earth fault loop impedance may be used.

(2) verification of the characteristics and/or effectiveness of the associated protective device. This verification shall be made:

- for overcurrent protective devices, by visual inspection (i.e. short-time or instantaneous tripping setting for circuit-breakers, current rating and type for fuses)
- for RCDs, by visual inspection and test. The effectiveness of disconnection of supply by RCDs shall be verified using suitable test equipment according to IEC 61557-6 (see 612.1) to confirm that the relevant requirements in Chapter 41 are met.

The disconnection times required by Chapter 41 shall be verified.

COPYRIGHT

612.9L Earth fault loop impedance

Where protective measures are used which require a knowledge of earth fault loop impedance, the relevant impedances shall be measured, or determined by an alternative method.

NOTE – Further information on measurement of earth fault loop impedance can be found in Appendix 14(L).

612.10 Additional protection

The verification of the effectiveness of the measures applied for additional protection is fulfilled by visual inspection and test. Where RCDs are required for additional protection, the effectiveness of automatic disconnection of supply by RCDs shall be verified using suitable test equipment according to IEC 61557-6 (see 612.1) to confirm that the relevant requirements in Chapter 41 are met.

612.11 Prospective fault current

The prospective short-circuit current and prospective earth fault current shall be measured, calculated or determined by another method, at the origin and at other relevant points in the installation.

612.12 Check of phase sequence

For multiphase circuits, it shall be verified that the phase sequence is maintained.

612.13 Functional testing

612.13.1 Where fault protection and/or additional protection is to be provided by an RCD, the effectiveness of any test facility incorporated in the device shall be verified.

612.13.2 Equipment, such as switchgear and controlgear assemblies, drives, controls and interlocks, shall be subjected to a functional test to show that it is properly mounted, adjusted and installed in accordance with the relevant requirements of these clauses.

612.14 Verification of voltage drop

Where required to verify compliance with Section 525, the following options may be used:

(i) The voltage drop may be evaluated by measuring the circuit impedance

(ii) The voltage drop may be evaluated by using calculations, for example, by diagrams or graphs showing maximum cable length v load current for different conductor cross-sectional areas with different percentage voltage drops for specific nominal voltages, conductor temperatures and wiring systems.

NOTE – Verification of voltage drop is not normally required during initial verification.

CHAPTER 62

PERIODIC INSPECTION AND TESTING

621 General

621.1 Where required, periodic inspection and testing of every electrical installation shall be carried out in accordance with 621.2L to 621.5 in order to determine, so far as is reasonably practicable, whether the installation is in a satisfactory condition for continued service.

COPYRIGHT

621.2L Periodic inspection comprising a detailed examination of the installation shall be carried out without dismantling, or with partial dismantling as required, supplemented by appropriate tests from Chapter 61 to show that the requirements for disconnection times, as set out in Chapter 41 for protective devices, are complied with, to provide for:

(i) safety of persons and livestock against the effects of electric shock and burns

(ii) protection against damage to property by fire and heat arising from an installation defect

(iii) confirmation that the installation is not damaged or deteriorated so as to impair safety

(iv) the identification of installation defects and departures from the requirements of these clauses that may give rise to danger.

NOTE – A generic list of examples of items requiring inspection is given in Appendix 6(L).

621.3 Precautions shall be taken to ensure that the periodic inspection and testing shall not cause danger to persons or livestock and shall not cause damage to property and equipment even if the circuit is defective. Measuring instruments and monitoring equipment and methods shall be chosen in accordance with relevant parts of IEC 61557-6. If other measuring equipment is used, it shall provide no less degree of performance and safety.

621.4 The extent and results of the periodic inspection and testing of an installation, or any part of an installation, shall be recorded.

621.5 Periodic inspection and testing shall be undertaken by a skilled or instructed person.

622 Frequency of inspection and testing

622.1 The frequency of periodic inspection and testing of an installation shall be determined having regard to the type of installation and equipment, its use and operation, the frequency and quality of maintenance and the external influences to which it is subjected. The results and recommendations of the previous report, if any, shall be taken into account.

622.2 In the case of an installation under an effective management system for preventive maintenance in normal use, periodic inspection and testing may be replaced by an adequate regime of continuous monitoring and maintenance of the installation and all its constituent equipment by skilled persons, competent in such work. Appropriate records shall be kept.

CHAPTER 63

CERTIFICATION AND REPORTING

631 General

631.1L Certification and reporting shall be accordance with the requirements of the relevant authority.

631.2 to 632.5 Reserved for future use

632 to 634 Reserved for future use

COPYRIGHT

PART 7

SPECIAL INSTALLATIONS OR LOCATIONS PARTICULAR REQUIREMENTS

CONTENTS

SECTION 701L LOCATIONS CONTAINING A BATH OR SHOWER

701.1 Scope
701.3 Assessment of general characteristics
701.41 Protection for safety: protection against electric shock
701.5 Selection and erection of equipment

SECTION 702 SWIMMING POOLS AND OTHER BASINS

702.1 Scope, object and fundamental principles
702.3 Assessment of general characteristics
702.4 Protection for safety
702.5 Selection and erection of equipment

SECTION 703 ROOMS AND CABINS CONTAINING SAUNA HEATERS

703.1 Scope
703.3 Assessment of general characteristics
703.41 Protection against electric shock
703.51 Selection and erection of equipment: Common rules
703.52 Selection and erection of equipment: Wiring systems
703.53 Selection and erection of equipment: Isolation, switching, control and accessories
703.55 Other equipment

SECTION 704L TEMPORARY ELECTRICAL INSTALLATIONS FOR CONSTRUCTION AND BUILDING SITES

SECTION 705 AGRICULTURAL AND HORTICULTURAL PREMISES

705.1L Scope
705.41 Protection against electric shock
705.42 Protection against thermal effects
705.51 Selection and erection of equipment: Common rules
705.52 Selection and erection of equipment: Wiring systems
705.53 Selection and erection of equipment: Isolation, switching and control
705.54 Selection and erection of equipment: Earthing arrangements and protective conductors
705.55 Selection and erection of equipment: Other equipment
705.56 Safety services

COPYRIGHT

SECTION 706 CONDUCTING LOCATIONS WITH RESTRICTED MOVEMENT

706.1L Scope
706.41 Protection against electric shock

SECTIONS 708 to 711 RESERVED FOR FUTURE USE

SECTION 712L SOLAR PHOTOVOLTAIC (PV) POWER SUPPLY SYSTEMS

712.1L Scope
712.3 Assessment of general characteristics
712.4 Protection for safety
712.5 Selection and erection of equipment

SECTION 714 OUTDOOR LIGHTING INSTALLATIONS

714.1L Scope
714.4 Protection for safety
714.5 Selection and erection of equipment

SECTION 715 EXTRA-LOW VOLTAGE LIGHTING INSTALLATIONS

715.1 Scope
715.4 Protection for safety
715.5 Selection and erection of equipment

SECTION 717 RESERVED FOR FUTURE USE

SECTION 721 RESERVED FOR FUTURE USE

SECTION 722L ELECTRIC VEHICLE CHARGING SYSTEM

SECTION 729 OPERATING AND MAINTENANCE GANGWAYS

729.1 Scope
729.3 Assessment of general characteristics

SECTION 740L TEMPORARY ELECTRICAL INSTALLATIONS FOR FESTIVE LIGHTING, TRADE-FAIRS, MINI-FAIRS AND EXHIBITION SITES

SECTION 753 RESERVED FOR FUTURE USE

COPYRIGHT

PART 7

SPECIAL INSTALLATIONS OR LOCATIONS PARTICULAR REQUIREMENTS

SECTION 701L

LOCATIONS CONTAINING A BATH OR SHOWER

701.1 Scope

The particular requirements of this section apply to the electrical installations in locations containing a fixed bath (bath tub, birthing pool) or shower and to the surrounding zones as described in these clauses.

These clauses do not apply to emergency facilities, e.g. emergency showers used in industrial areas or laboratories.

701.3 Assessment of general characteristics

701.32 Classification of external influences

701.32.1 General

When applying this section, the zones specified in 701.32.2 to 701.32.4 shall be taken into account. For fixed prefabricated bath or shower units, the zones are applied to the situation when the bath or shower basin is in its usable configuration(s).

Horizontal or inclined ceilings, walls with or without windows, doors, floors and fixed partitions may be taken into account where these effectively limit the extent of locations containing a bath or shower as well as their zones. Where the dimensions of fixed partitions are smaller than the dimensions of the relevant zones, e.g. partitions having a height lower than 2.25 m, the minimum distance in the horizontal and vertical directions shall be taken into account (see Figures 701.1 and 701.2).

For electrical equipment in parts of walls or ceilings limiting the zones specified in 701.32.2 to 701.32.4, but being part of the surface of that wall or ceiling, the requirements for the respective zone apply.

701.32.2 Description of Zone 0

Zone 0 is the interior of the bath tub or shower basin (see Figures 701.1 and 701.2).

For showers without a basin, the height of Zone 0 is 0.10 m and its surface extent has the same horizontal extent as Zone 1 (see Figure 701.2).

701.32.3 Description of Zone 1

Zone 1 is limited by:

(i) the finished floor level and the horizontal plane corresponding to the highest fixed shower head or water outlet or the horizontal plane lying 2.25 m above the finished floor level, whichever is higher

COPYRIGHT

(ii) the vertical surface:

(a) circumscribing the bath tub or shower basin (see Figure 701.1)

(b) at a distance of 1.20 m from the centre point of the fixed water outlet on the wall or ceiling for showers without a basin (see Figure 701.1(e) and (f)).

Zone 1 does not include Zone 0.

The space under the bath tub or shower basin is considered to be Zone 1. However, if the space under the bath tub or shower basin is only accessible with a tool, it is considered to be outside the zones.

701.32.4 Description of Zone 2

Zone 2 is limited by:

(i) the finished floor level and the horizontal plane corresponding to the highest fixed shower head or water outlet or the horizontal plane lying 2.25 m above the finished floor level, whichever is higher

(ii) the vertical surface at the boundary of Zone 1 and the parallel vertical surface at a distance of 0.60 m from the Zone 1 border (see Figure 701.1).

For showers without a basin, there is no Zone 2 but an increased Zone 1 is provided by the horizontal dimension of 1.20 m mentioned in 701.32.3(ii)(b) (see Figure 701.1(e) and (f)).

701.41 Protection for safety: protection against electric shock

701.410.3 General requirements

701.410.3.5 The protective measures of obstacles and placing out of reach (see Section 417) are not permitted.

701.410.3.6 The protective measures of non-conducting location (see 418.1) and earth-free local equipotential bonding (see 418.2) are not permitted.

701.411.3.3 Additional protection by RCDs

Additional protection shall be provided for all low voltage circuits of the location, by the use of one or more RCDs having the characteristics specified in 415.1.1.

NOTE – See also 314.1L(iv) and 531.2.4 concerning the avoidance of unwanted tripping.

701.413L Protective measure: Electrical separation

Protection by electrical separation shall only be used for:

(i) circuits supplying one item of current-using equipment, or

(ii) one single socket-outlet.

COPYRIGHT

701.414 Protective measure: Extra-low voltage provided by SELV or PELV

701.414.4.5 Requirements for SELV and PELV circuits

Where SELV or PELV is used, whatever the nominal voltage, basic protection for equipment in zones 0, 1 and 2 shall be provided by:

(i) basic insulation complying with 416.1, or

(ii) barriers or enclosures complying with 416.2.

701.415 Additional protection

701.415.2 Supplementary equipotential bonding

Local supplementary equipotential bonding according to 415.2 shall be established connecting together the terminals of the protective conductor of each circuit supplying Class I and Class II equipment to the accessible extraneous-conductive-parts, within a room containing a bath or shower, including the following:

(i) metallic pipes supplying services and metallic waste pipes (e.g. water, gas)

(ii) metallic central heating pipes and air conditioning systems

(iii) accessible metallic structural parts of the building (metallic door architraves, window frames and similar parts are not considered to be extraneous-conductive-parts unless they are connected to metallic structural parts of the building).

Supplementary equipotential bonding may be installed outside or inside rooms containing a bath or shower, preferably close to the point of entry of extraneous-conductive-parts into such rooms.

Where the location containing a bath or shower is in a building with a protective equipotential bonding system in accordance with 411.3.1.2L, supplementary equipotential bonding may be omitted where all of the following conditions are met:

(iv) All final circuits of the location comply with the requirements for automatic disconnection according to 411.3.2

(v) All final circuits of the location have additional protection by means of an RCD in accordance with 701.411.3.3

(vi) All extraneous-conductive-parts of the location are effectively connected to the protective equipotential bonding according to 411.3.1.2L.

NOTE – The effectiveness of the connection of extraneous-conductive-parts in the location to the main earthing terminal may be assessed, where necessary, by the application of 415.2.2.

701.5 Selection and erection of equipment

701.512.2 External influences

Installed electrical equipment shall have at least the following degrees of protection:

(i) In Zone 0: IPX7

(ii) In Zones 1 and 2: IPX4.

COPYRIGHT

This requirement does not apply to shaver supply units complying with IEC 61558-2-5 installed in Zone 2 and located where direct spray from showers is unlikely.

Electrical equipment exposed to water jets, e.g. for cleaning purposes, shall have a degree of protection of at least IPX5.

701.512.3 Erection of switchgear, controlgear and accessories according to external influences

The following requirements do not apply to switches and controls which are incorporated in fixed current-using equipment suitable for use in that zone or to insulating pull cords of cord operated switches.

In Zone 0:

switchgear or accessories shall not be installed.

In Zone 1:

only switches of SELV circuits supplied at a nominal voltage not exceeding 12 V a.c. rms or 30 V ripple- free d.c. shall be installed, the safety source being installed outside Zones 0, 1 and 2.

In Zone 2:

switchgear, accessories incorporating switches or socket-outlets shall not be installed with the exception of:

(i) switches and socket-outlets of SELV circuits, the safety source being installed outside Zones 0, 1 and 2, and

(ii) shaver supply units complying with IEC 61558-2-5.

Except for SELV socket-outlets complying with Section 414 and shaver supply units complying with IEC 61558-2-5, socket-outlets are prohibited within a distance of 3 m horizontally from the boundary of Zone 1.

701.55L Current-using equipment

In Zone 0, current-using equipment shall only be installed provided that all the following requirements are met:

(i) The equipment complies with the relevant standard and is suitable for use in that zone according to the manufacturer's instructions for use and mounting

(ii) The equipment is fixed and permanently connected

(iii) The equipment is protected by SELV at a nominal voltage not exceeding 12 V a.c. rms or 30 V ripple-free d.c., the safety source being installed outside Zones 0, 1 and 2.

In Zone 1, only the following fixed and permanently connected current-using equipment shall be installed, provided it is suitable for installation in Zone 1 according to the manufacturer's instructions:

(iv) Whirlpool units

(v) Electric showers

(vi) Shower pumps

COPYRIGHT

(vii) Equipment protected by SELV or PELV at a nominal voltage not exceeding 25 V a.c. rms or 60 V ripple- free d.c., the safety source being installed outside Zones 0, 1 and 2

(viii) Ventilation equipment

(ix) Towel rails

(x) Water heating appliances.

701.55.1L Luminaires

In a room containing a fixed bath or shower cubicle, parts of a lampholder within a distance of 2.5 m from the bath or shower cubicle shall be constructed of, or shrouded in, insulating materials. Bayonet lampholders Type B22 shall be fitted with a protective shield complying with IEC 60061. Alternatively, totally enclosed luminaires shall be used.

701.55.2L Electric Bidets

The final circuit for the electric bidet shall be protected by a 16 A MCB and RCCB of voltage independent type complying to SS 97 with 10 mA rated residual operating current at the DB.

The electric bidet shall be controlled by a 20 A double pole switch outside the toilet. A 16 A weatherproof connection unit of IP55 with non-metallic casing shall be installed near to the control box of the electric bidet for connection of supply cable. The electric bidet shall be installed outside Zones 0, 1 and 2.

A skilled person shall take charge of the installation of the equipment and the methods of wiring installations shall comply with the requirements of this Code.

The electric bidet shall be tested for compliance to IEC 60335-2-84 (Safety of Household and Similar Electrical Appliances, Part 2-84: Particular Requirements for Toilets) or equivalent.

A schematic diagram showing the recommended set-up is as follow:

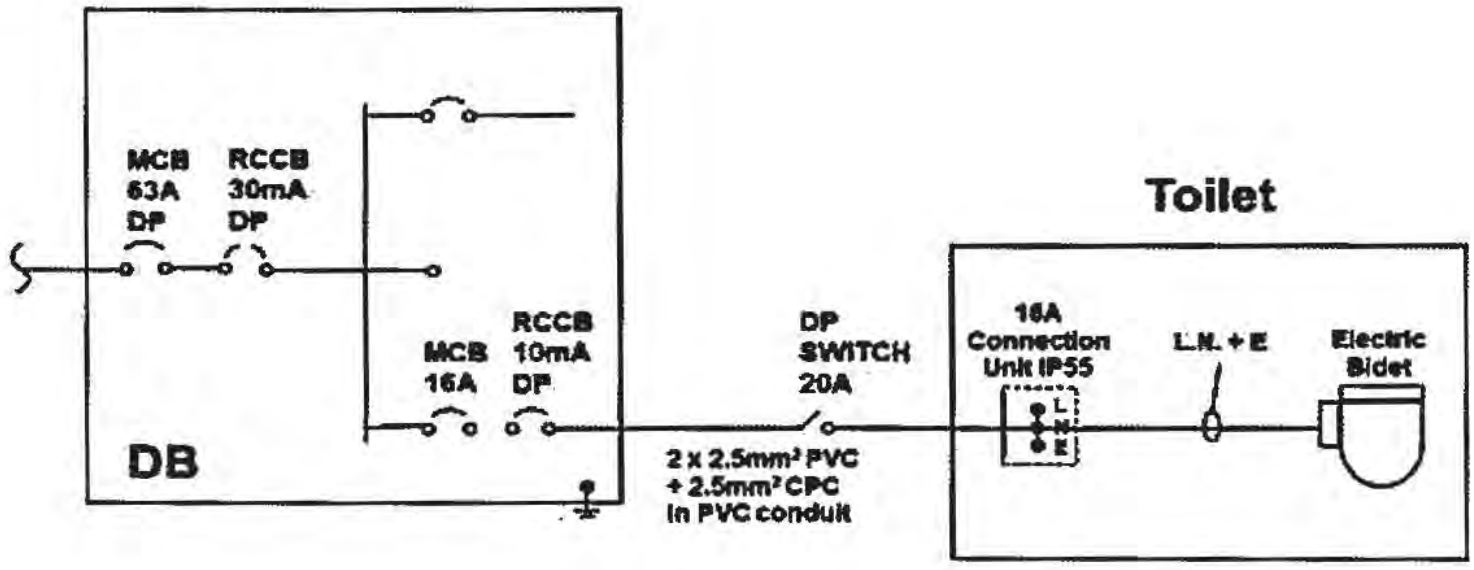

701.753 Reserved for future use

COPYRIGHT

Figure 701.1 – Examples of zone dimensions (plan)
NOT TO SCALE (See 701.32 for definitions of zones)

a) Bath tub

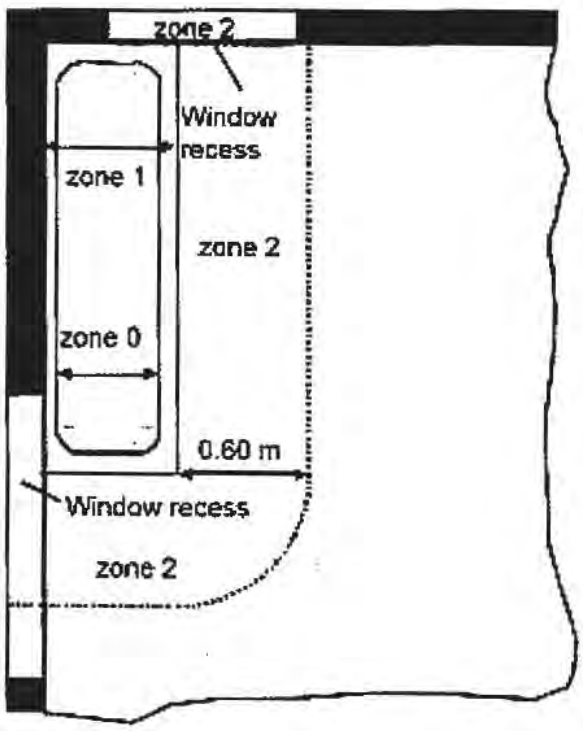

b) Bath tub, with permanent fixed partition

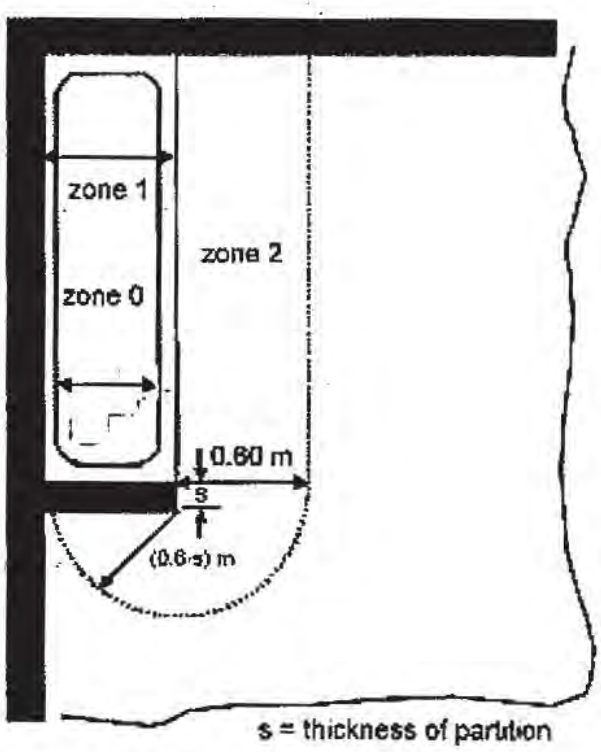

s = thickness of partition

c) Shower basin

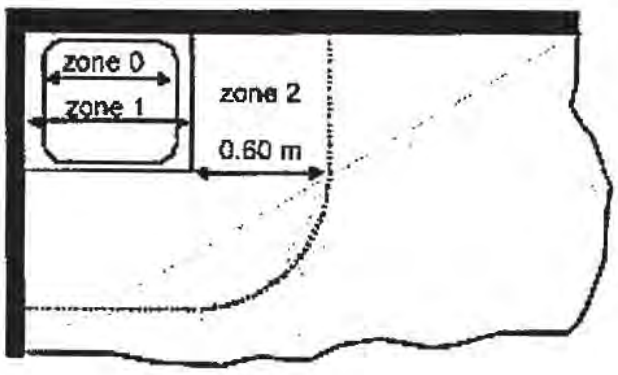

d) Shower basin with permanent fixed partition

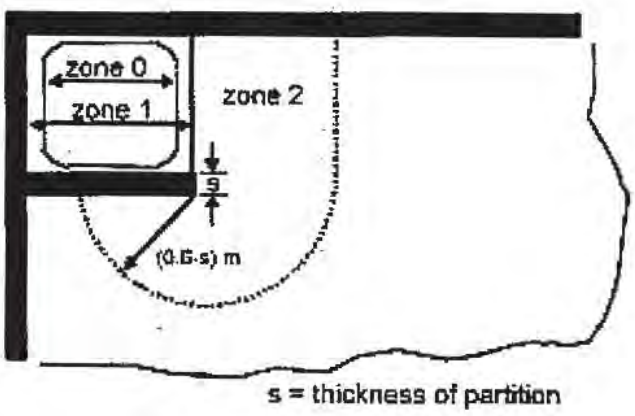

s = thickness of partition

e) Shower, without basin

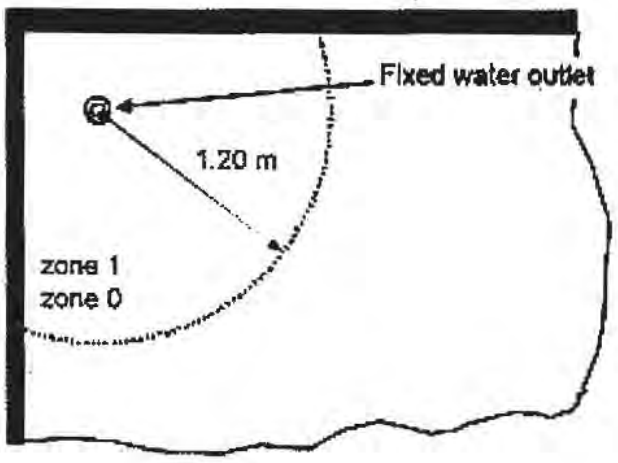

f) Shower, without basin, but with permanent fixed partition

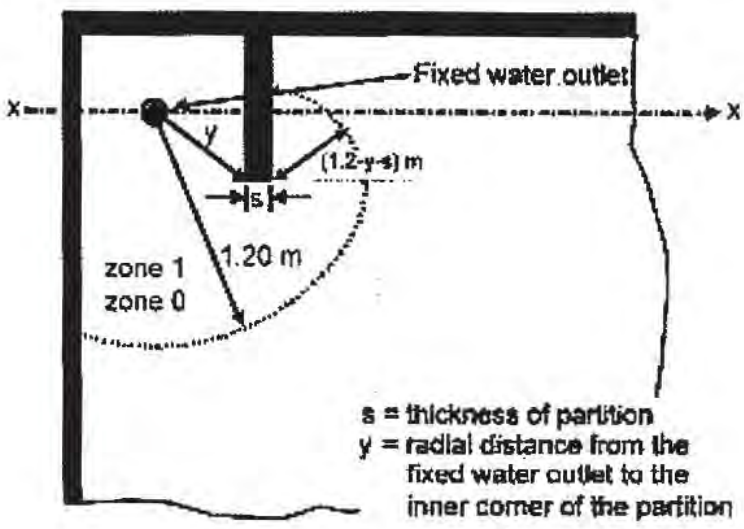

s = thickness of partition
y = radial distance from the fixed water outlet to the inner corner of the partition

COPYRIGHT

Figure 701.2 – Examples of zone dimensions (elevation)
NOT TO SCALE (See 701.32 for definitions of zones)

a) Bath tub

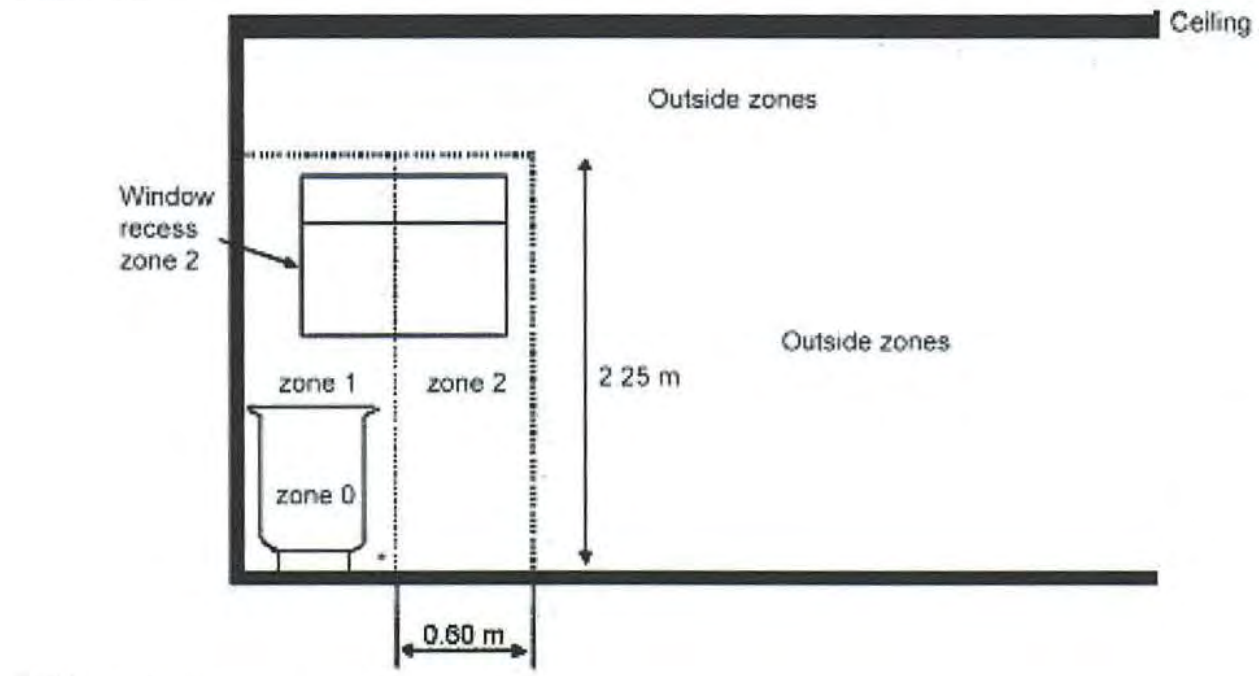

c) Shower basin

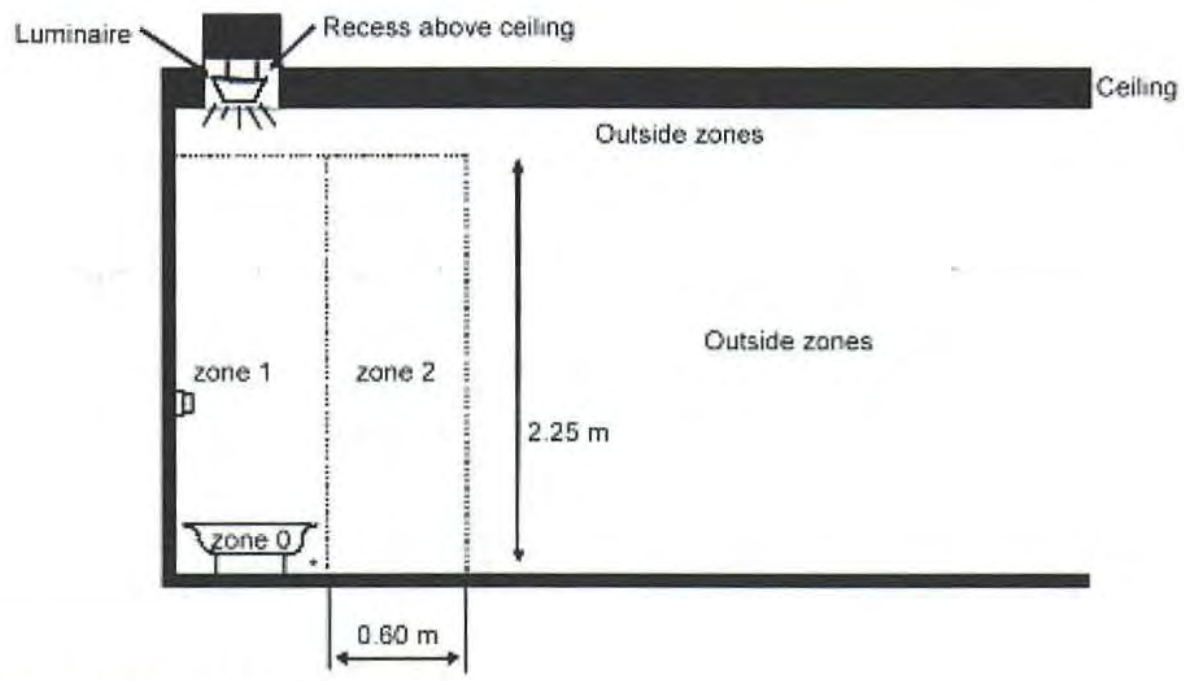

f) Shower without basin, but with permanent fixed partition

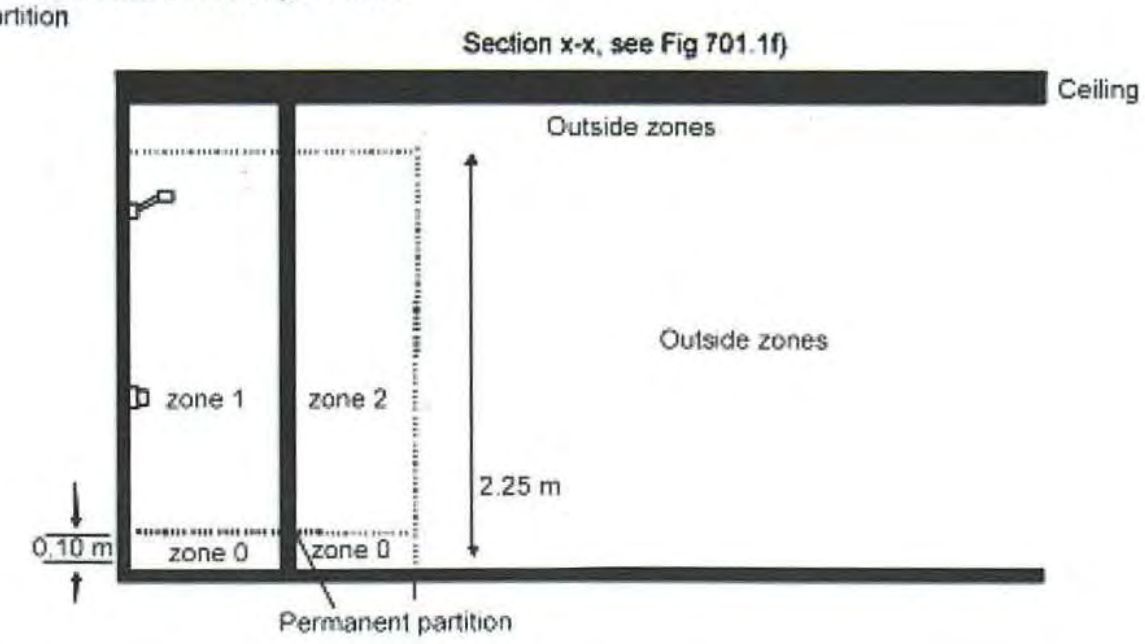

* Zone 1 if the space is accessible without the use of a tool.
Spaces under the bath accessible only with the use of a tool are outside the zones.

COPYRIGHT

SECTION 702

SWIMMING POOLS AND OTHER BASINS

702.1 Scope, object and fundamental principles

702.11 Scope

The particular requirements of this section apply to the basins of swimming pools, the basins of fountains and the basins of paddling pools. The particular requirements also apply to the surrounding zones of these basins.

In these areas, in normal use, the risk of electric shock is increased by a reduction in body resistance and contact of the body with Earth potential. Swimming pools within the scope of an equipment standard are outside the scope of this section.

Except for areas especially designed as swimming pools, the requirements of this section do not apply to natural waters, lakes in gravel pits, coastal areas and the like.

702.3 Assessment of general characteristics

702.32 Classification of external influences

These requirements are based on the dimensions of three zones (examples are given in Figures 702.1 to 702.4).

Zones 1 and 2 may be limited by fixed partitions having a minimum height of 2.5 m.

(i) Zone 0

This zone is the interior of the basin of the swimming pool or fountain including any recesses in its walls or floors, basins for foot cleaning and water jets or waterfalls and the space below them.

(ii) Zone 1

This zone is limited by:

- Zone 0
- a vertical plane 2 m from the rim of the basin
- the floor or surface expected to be occupied by persons
- the horizontal plane 2.5 m above the floor or the surface expected to be occupied by persons.

Where the swimming pool or fountain contains diving boards, springboards, starting blocks, chutes or other components expected to be occupied by persons, Zone 1 comprises the zone limited by:

- a vertical plane situated 1.5 m from the periphery of the diving boards, springboards, starting blocks, chutes and other components such as accessible sculptures, viewing bays and decorative basins

- the horizontal plane 2.5 m above the highest surface expected to be occupied by persons.

COPYRIGHT

(iii) Zone 2

This zone is limited by:

- the vertical plane external to Zone 1 and a parallel plane 1.5 m from the former
- the floor or surface expected to be occupied by persons
- the horizontal plane 2.5 m above the floor or surface expected to be occupied by persons.

There is no Zone 2 for fountains.

702.4 Protection for safety

702.410.3 General requirements

702.410.3.4 Application of protective measures against electric shock

702.410.3.4.1 Zones 0 and 1

Except for fountains as stated in 702.410.3.4.2, in Zone 0 only protection by SELV at a nominal voltage not exceeding 12 V a.c. rms or 30 V ripple-free d.c. is permitted, the source for SELV being installed outside Zones 0, 1 and 2.

Except for fountains as stated in 702.410.3.4.2, in Zone 1 only protection by SELV at a nominal voltage not exceeding 25 V a.c. rms or 60 V ripple-free d.c. is permitted, the source for SELV being installed outside Zones 0, 1 and 2.

Equipment for use in the interior of basins which is only intended to be in operation when people are not inside Zone 0 shall be supplied by a circuit protected by:

(i) SELV (see Section 414), the source for SELV being installed outside Zones 0, 1 and 2. However, it is permitted to install the source for SELV in Zone 2 if its supply circuit is protected by an RCD having the characteristics specified in 415.1.1, or

(ii) automatic disconnection of the supply (see Section 411), using an RCD having the characteristics specified in 415.1.1, or

(iii) electrical separation (see Section 413), the source for electrical separation supplying only one item of current- using equipment and being installed outside Zones 0, 1 and 2. However, it is permitted to install the source in Zone 2 if its supply circuit is protected by an RCD having the characteristics specified in 415.1.1.

The socket-outlet of a circuit supplying such equipment and the control device of such equipment shall have a notice in order to warn the user that this equipment shall be used only when the swimming pool is not occupied by persons.

702.410.3.4.2 Zones 0 and 1 of fountains

In Zones 0 and 1, one or more of the following protective measures shall be employed:

(i) SELV (see Section 414), the source for SELV being installed outside Zones 0 and 1

(ii) Automatic disconnection of supply (see Section 411), using an RCD having the characteristics specified in 415.1.1

(iii) Electrical separation (see Section 413), the source for electrical separation supplying only one item of current- using equipment and being installed outside Zones 0 and 1.

COPYRIGHT

702.410.3.4.3 Zone 2

One or more of the following protective measures shall be employed:

(i) SELV (see Section 414), the source for SELV being installed outside Zones 0, 1 and 2. However, it is permitted to install the source for SELV in Zone 2 if its supply circuit is protected by an RCD having the characteristics specified in 415.1.1

(ii) Automatic disconnection of supply (see Section 411), using an RCD having the characteristics specified in 415.1.1

NOTE – Where a PME earthing facility is used as the means of earthing for the electrical installation of a swimming pool or other basin, it is recommended that an earth mat or earth electrode of suitably low resistance, e.g. 20 ohms or less, be installed and connected to the protective equipotential bonding.

(iii) Electrical separation (see Section 413), the source for electrical separation supplying only one item of current- using equipment and being installed outside Zones 0, 1 and 2. However, it is permitted to install the source in Zone 2 if its supply circuit is protected by an RCD having the characteristics specified in 415.1.1.

There is no Zone 2 for fountains.

702.410.3.5 The protective measures of obstacles and placing out of reach (see Section 417) are not permitted.

702.410.3.6 The protective measures of non-conducting location (see 418.1) and earth-free local equipotential bonding (see 418.2) are not permitted.

702.414 Protective measure: Extra-low voltage provided by SELV or PELV

702.414.4 Requirements for SELV and PELV circuits

702.414.4.5 Where SELV is used, whatever the nominal voltage, basic protection shall be provided by:

(i) basic insulation complying with 416.1, or

(ii) barriers or enclosures complying with 416.2.

702.415 Additional protection

702.415.2 Additional protection: Supplementary equipotential bonding

All extraneous-conductive-parts in Zones 0, 1 and 2 shall be connected by supplementary protective bonding conductors to the protective conductors of exposed-conductive-parts of equipment situated in these zones, in accordance with 415.2.

NOTE – The connection with the protective conductor may be provided in the proximity of the location, e.g. in an accessory or in a local distribution board.

702.5 Selection and erection of equipment

702.51 Common rules

702.512 Operational conditions and external influences

COPYRIGHT

702.512.2 External influences

Electrical equipment shall have at least the following degree of protection according to IEC 60529:

(i) Zone 0: IPX8

(ii) Zone 1: IPX4, IPX5 where water jets are likely to occur for cleaning purposes

(iii) Zone 2: IPX2 for indoor locations, IPX4 for outdoor locations, IPX5 where water jets are likely to occur for cleaning purposes.

702.52 Wiring systems

702.520 General

The following clauses apply to surface wiring systems and to wiring systems embedded in the walls, ceilings or floors at a depth not exceeding 50 mm.

702.522 Selection and erection in relation to external influences

702.522.21 Erection according to the zones

In Zones 0, 1 and 2, any metallic sheath or metallic covering of a wiring system shall be connected to the supplementary equipotential bonding.

NOTE – Cables should preferably be installed in conduits made of insulating material.

702.522.22 Limitation of wiring systems according to the zone

In Zones 0 and 1, a wiring system shall be limited to that necessary to supply equipment situated in these zones.

702.522.23 Additional requirements for the wiring of fountains

For a fountain, the following additional requirements shall be met:

(i) A cable for electrical equipment in Zone 0 shall be installed as far outside the basin rim as is reasonably practicable and run to the electrical equipment inside Zone 0 by the shortest practicable route

(ii) In Zone 1, a cable shall be selected, installed and provided with mechanical protection to medium severity (AG2) and the relevant submersion in water depth (AD8). The cable type H07RN8-F (BS EN 50525 and BS 6004) is suitable up to a depth of 10 m of water. For depths of water greater than 10 m the cable manufacturer shall be consulted.

702.522.24 Junction boxes

A junction box shall not be installed in Zones 0 or 1, but in the case of SELV circuits it is permitted to install junction boxes in Zone 1.

702.53L Switchgear and controlgear

In Zones 0 or 1, switchgear or controlgear shall not be installed.

In Zones 0 or 1, a socket-outlet shall not be installed unless otherwise comply with 702.53.2L.

COPYRIGHT

702.53.1L In Zone 2, a socket-outlet or a switch is permitted only if the supply circuit is protected by one of the following protective measures:

(i) SELV (see Section 414), the source of SELV being installed outside Zones 0, 1 and 2. However, it is permitted to install the source of SELV in Zone 2 if its supply circuit is protected by an RCD having the characteristics specified in 415.1.1

(ii) Automatic disconnection of supply (see Section 411), using an RCD having the characteristics specified in 415.1.1

(iii) Electrical separation (see Section 413), the source for electrical separation supplying only one item of current- using equipment, or one socket-outlet, and being installed outside Zones 0, 1 and 2. However, it is permitted to install the source in Zone 2 if its supply circuit is protected by an RCD having the characteristics specified in 415.1.1.

702.53.2L For a swimming pool where it is not possible to locate a socket-outlet or switch outside Zone 1, a socket-outlet or switch, having a non-conductive cover or cover plate, is permitted in Zone 1 if it is installed at least 1.25 m horizontally from the border of Zone 0, is placed at least 0.3 m above the floor, and is protected by:

(i) SELV (see Section 414), at a nominal voltage not exceeding 25 V a.c. rms or 60 V ripple-free d.c., the source for SELV being installed outside Zones 0 and 1, or

(ii) automatic disconnection of supply (see Section 411), using an RCD having the characteristics specified in 415.1.1, or

(iii) electrical separation (see Section 413) for a supply to only one item of current-using equipment, the source for electrical separation being installed outside Zones 0 and 1.

702.53.3L Socket-outlets shall comply with IEC 60309-2.

702.55 Other equipment

702.55.1L Current-using equipment of swimming pools

In Zones 0 and 1, it is only permitted to install fixed current-using equipment specifically designed for use in a swimming pool, in accordance with the requirements of 702.55.2 and 702.55.4. Equipment which is intended to be in operation only when people are outside Zone 0 may be used in all zones provided that it is supplied by a circuit protected according to 702.410.3.4.

702.55.2 Underwater luminaires for swimming pools

A luminaire for use in the water or in contact with the water shall be fixed and shall comply with IEC 60598-2-18.

Underwater lighting located behind watertight portholes, and serviced from behind, shall comply with the appropriate part of IEC 60598 and be installed in such a way that no intentional or unintentional conductive connection between any exposed-conductive-part of the underwater luminaires and any conductive parts of the portholes can occur.

702.55.3 Electrical equipment of fountains

Electrical equipment in Zones 0 or 1 shall be provided with mechanical protection to medium severity (AG2), e.g. by use of mesh glass or by grids which can only be removed by the use of a tool.

A luminaire installed in Zones 0 or 1 shall be fixed and shall comply with IEC 60598-2-18.

An electric pump shall comply with the requirements of IEC 60335-2-41.

COPYRIGHT

702.55.4 Special requirements for the installation of electrical equipment in Zone 1 of swimming pools and other basins

Fixed equipment designed for use in swimming pools and other basins (e.g. filtration systems, jet stream pumps) and supplied at low voltage is permitted in Zone 1, subject to all the following requirements being met:

(i) The equipment shall be located inside an insulating enclosure providing at least Class II or equivalent insulation and providing protection against mechanical impact of medium severity (AG2)

This clause applies irrespective of the classification of the equipment.

(ii) The equipment shall only be accessible via a hatch (or a door) by means of a key or a tool. The opening of the hatch (or door) shall disconnect all live conductors. The supply cable and the main disconnecting means shall be installed in a way which provides protection of Class II or equivalent insulation

(iii) The supply circuit of the equipment shall be protected by:

- SELV at a nominal voltage not exceeding 25 V a.c. rms or 60 V ripple-free d.c., the source of SELV being installed outside Zones 0, 1 and 2, or
- an RCD having the characteristics specified in 415.1.1, or
- electrical separation (see Section 413), the source for electrical separation supplying a single fixed item of current-using equipment and being installed outside Zones 0, 1 and 2.

For swimming pools where there is no Zone 2, lighting equipment supplied by other than a SELV source at 12 V a.c. rms or 30 V ripple-free d.c. may be installed in Zone 1 on a wall or on a ceiling, provided that the following requirements are fulfilled:

- The circuit is protected by automatic disconnection of the supply and additional protection is provided by an RCD having the characteristics specified in 415.1.1
- The height from the floor is at least 2 m above the lower limit of Zone 1.

In addition, every luminaire shall have an enclosure providing Class II or equivalent insulation and providing protection against mechanical impact of medium severity.

COPYRIGHT

Figure 702.1 – Zone dimensions for swimming pools and padding pools

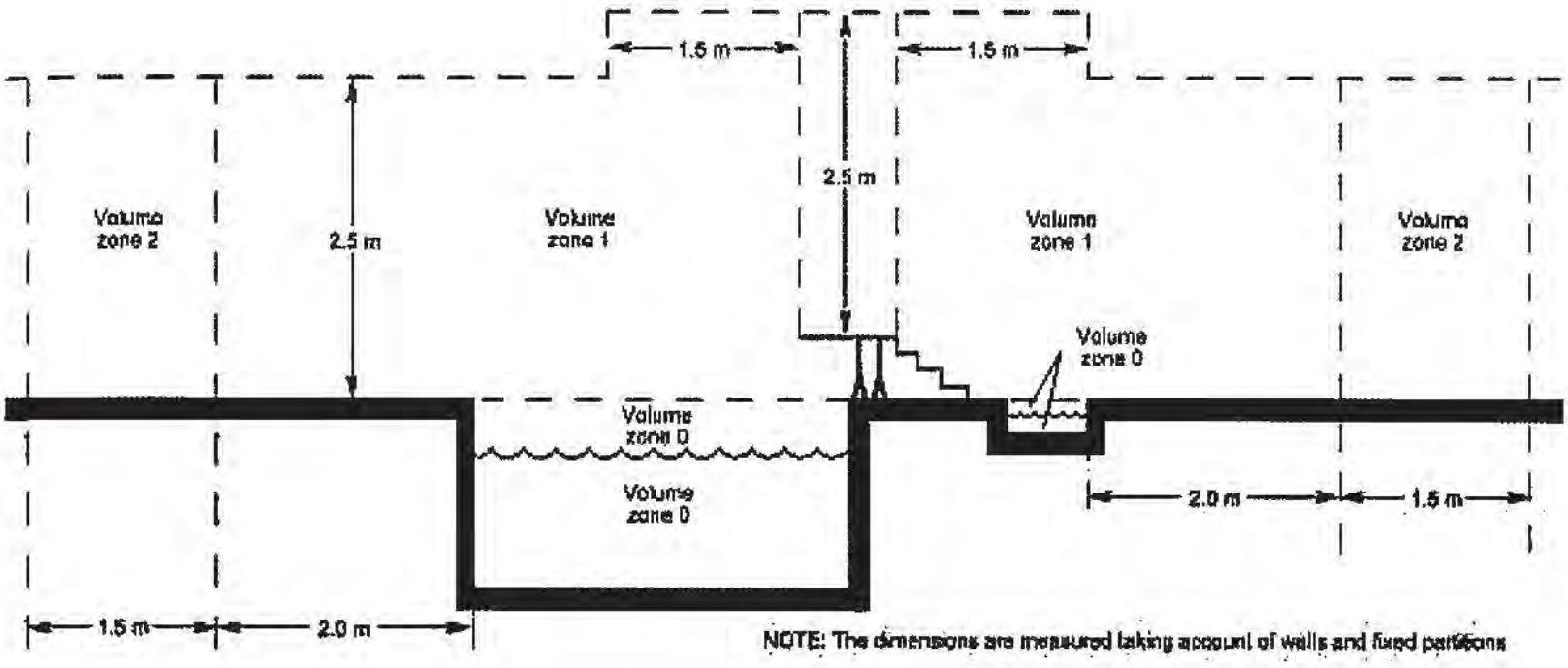

NOTE: The dimensions are measured taking account of walls and fixed partitions

Figure 702.2 – Zone dimensions for basin above ground level

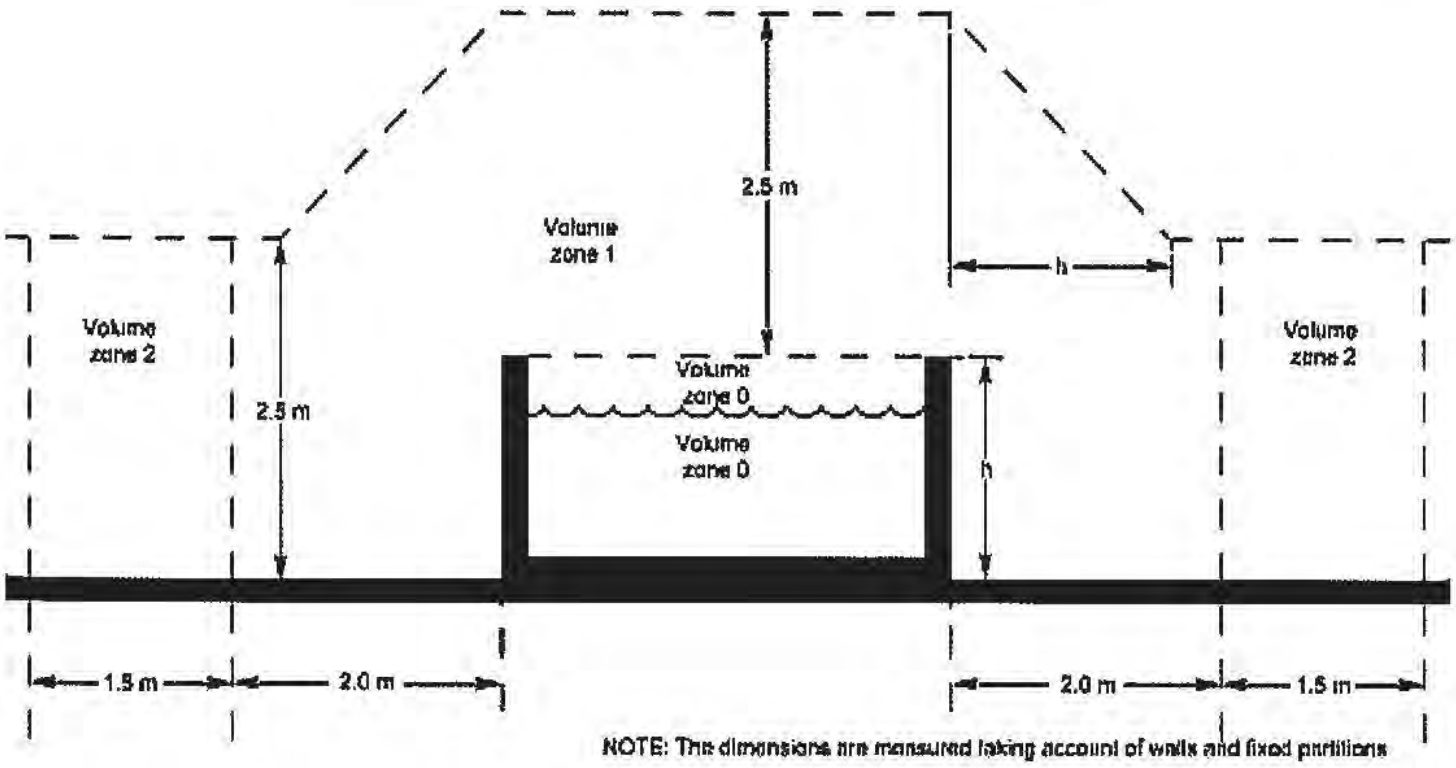

NOTE: The dimensions are measured taking account of walls and fixed partitions

COPYRIGHT

Figure 702.3 – Example of zone dimensions (plan) with fixed partitions of height at least 2.6 m

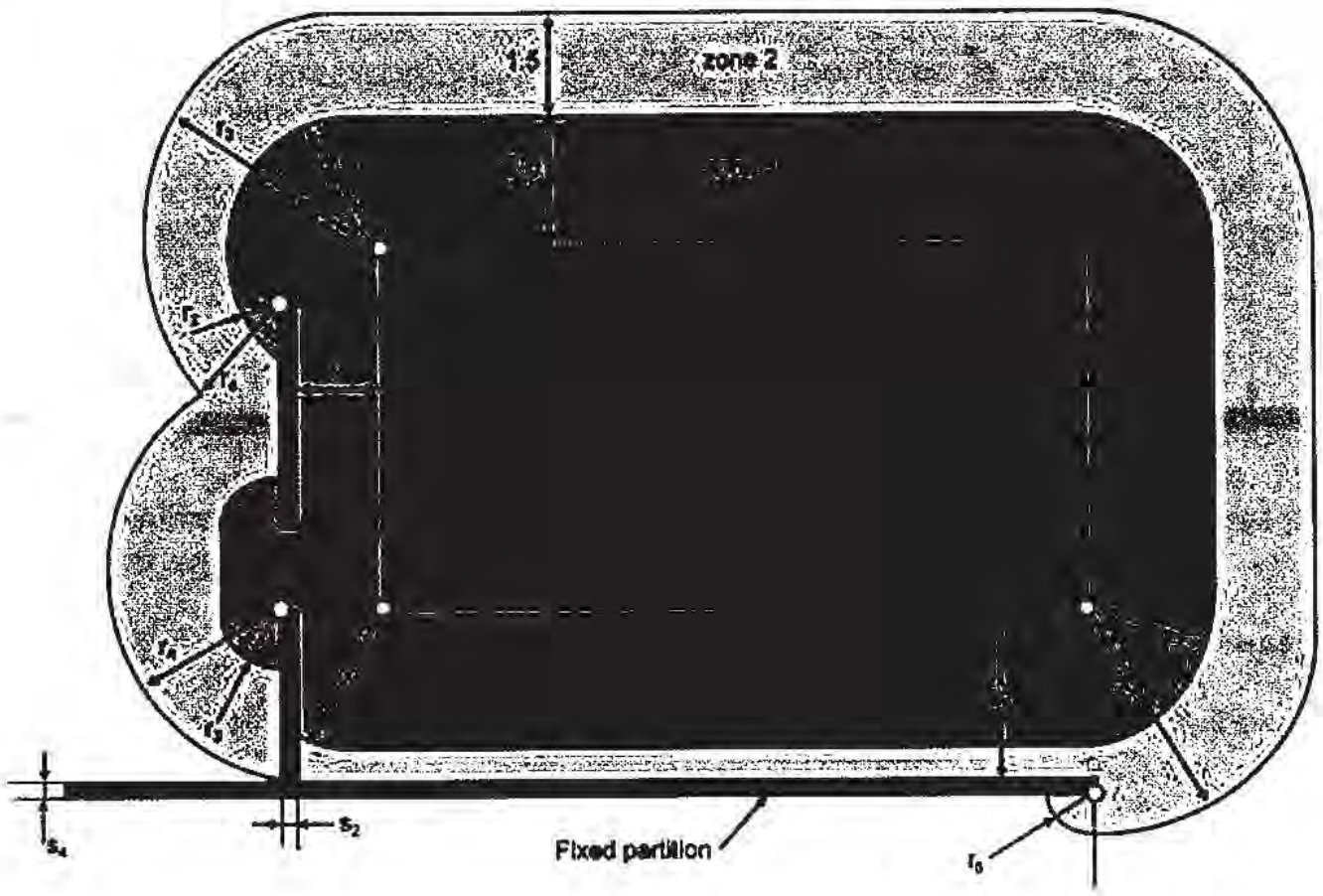

Figure 702.4 – Example of dimensions of the zones of a fountain

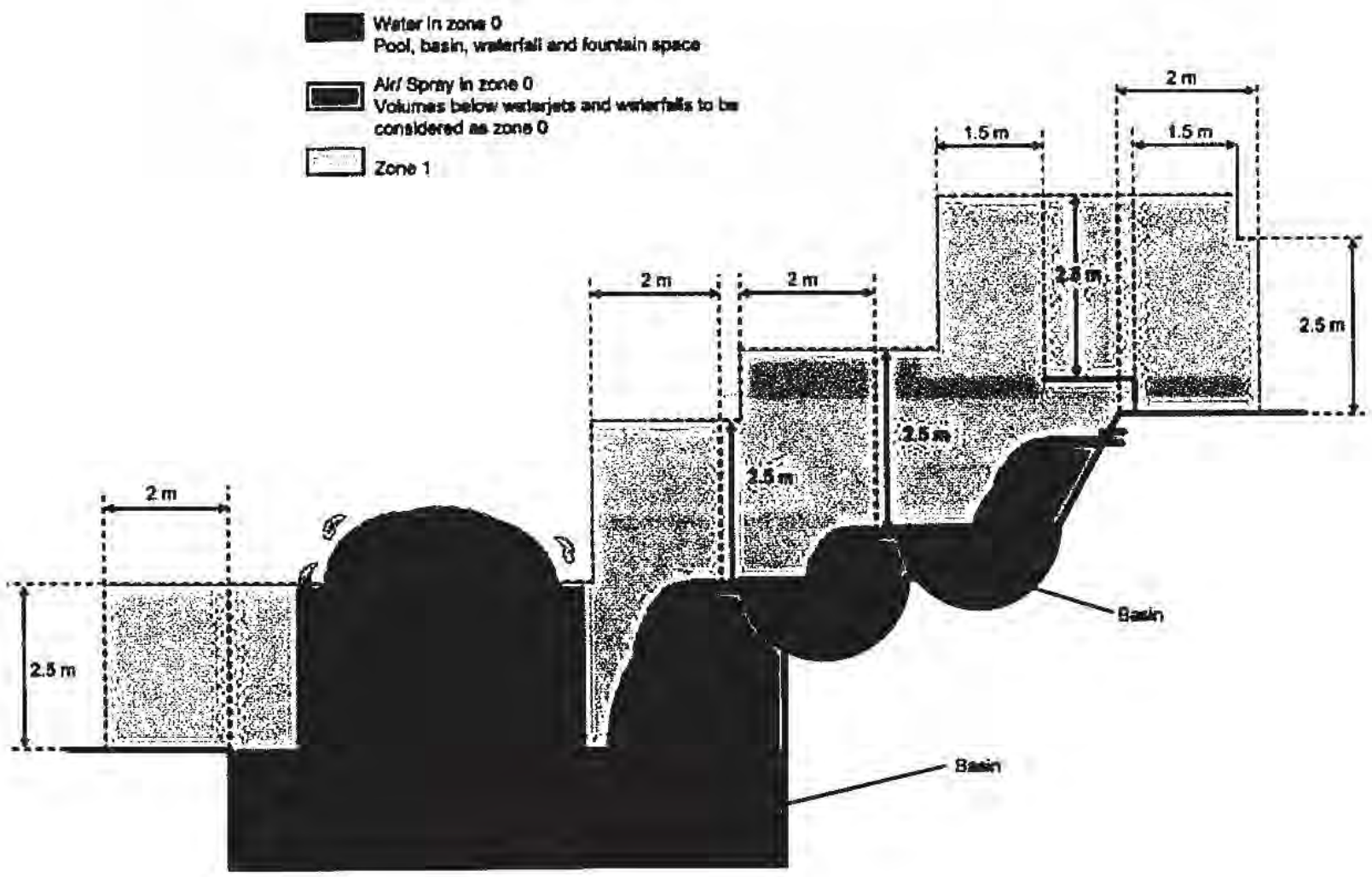

COPYRIGHT

SECTION 703

ROOMS AND CABINS CONTAINING SAUNA HEATERS

703.1 Scope

The particular requirements of this section apply to:

(i) sauna cabins erected on site, e.g. in a location or in a room

(ii) the room where the sauna heater is, or the sauna heating appliances are installed. In this case the whole room is considered as the sauna.

The requirements of this section do not apply to prefabricated sauna cabins complying with a relevant equipment standard.

Where facilities such as showers, etc. are installed, the requirements of Section 701L also apply.

703.3 Assessment of general characteristics

703.32 General

When applying these clauses, the zones specified in 703.32.1 to 703.32.3 shall be taken into account (see also Figure 703).

703.32.1 Description of Zone 1

Zone 1 is the volume containing the sauna heater, limited by the floor, the cold side of the thermal insulation of the ceiling and a vertical surface circumscribing the sauna heater at a distance 0.5 m from the surface of the heater. If the sauna heater is located closer than 0.5 m to a wall, then Zone 1 is limited by the cold side of the thermal insulation of that wall.

703.32.2 Description of Zone 2

Zone 2 is the volume outside Zone 1, limited by the floor, the cold side of the thermal insulation of the walls and a horizontal surface located 1.0 m above the floor.

703.32.3 Description of Zone 3

Zone 3 is the volume outside Zone 1, limited by the cold side of the thermal insulation of the ceiling and walls and a horizontal surface located 1.0 m above the floor.

703.41 Protection against electric shock

703.410.3 General requirements

703.410.3.5 The protective measures of obstacles and placing out of reach (see Section 417) are not permitted.

703.410.3.6 The protective measures of non-conducting location (see 418.1) and earth-free local equipotential bonding (see 418.2) are not permitted.

COPYRIGHT

703.411.3.3 Additional protection by RCDs

Additional protection shall be provided for all circuits of the sauna, by the use of one or more RCDs having the characteristics specified in 415.1.1. RCD protection need not be provided for the sauna heater unless such protection is recommended by the manufacturer.

703.414 Protective measure: Extra-low voltage provided by SELV or PELV

703.414.4.5 Where SELV or PELV is used, whatever the nominal voltage, basic protection shall be provided by:

(i) basic insulation complying with 416.1, or

(ii) barriers or enclosures complying with 416.2.

703.51 Selection and erection of equipment: Common rules

703.512.2 External influences

The equipment shall have a degree of protection of at least IPX4.

If cleaning by use of water jets may be reasonably expected, electrical equipment shall have a degree of protection of at least IPX5.

Three zones are defined as shown in Figure 703:

(i) In Zone 1: only the sauna heater and equipment belonging to the sauna heater shall be installed

(ii) In Zone 2: there is no special requirement concerning heat-resistance of equipment

(iii) In Zone 3: the equipment shall withstand a minimum temperature of 125 °C and the insulation and sheaths of cables shall withstand a minimum temperature of 170 °C (see also 703.52 for wiring).

703.52 Selection and erection of equipment: Wiring systems

The wiring system should be preferably installed outside the zones, i.e. on the cold side of the thermal insulation. If the wiring system is installed on the warm side of the thermal insulation in Zones 1 or 3, it shall be heat-resisting. Metallic sheaths and metallic conduits shall not be accessible in normal use.

703.53 Selection and erection of equipment: Isolation, switching, control and accessories

703.537.5 Switchgear and controlgear which forms part of the sauna heater equipment or of other fixed equipment installed in Zone 2, may be installed within the sauna room or cabin in accordance with the manufacturer's instructions. Other switchgear and controlgear, e.g. for lighting, shall be placed outside the sauna room or cabin. Socket-outlets shall not be installed within the location containing the sauna heater.

703.55 Other equipment

Sauna heating appliances shall comply with IEC 60335-2-53 and be installed in accordance with the manufacturer's instructions.

COPYRIGHT

Figure 703 – Zone dimensions for a sauna

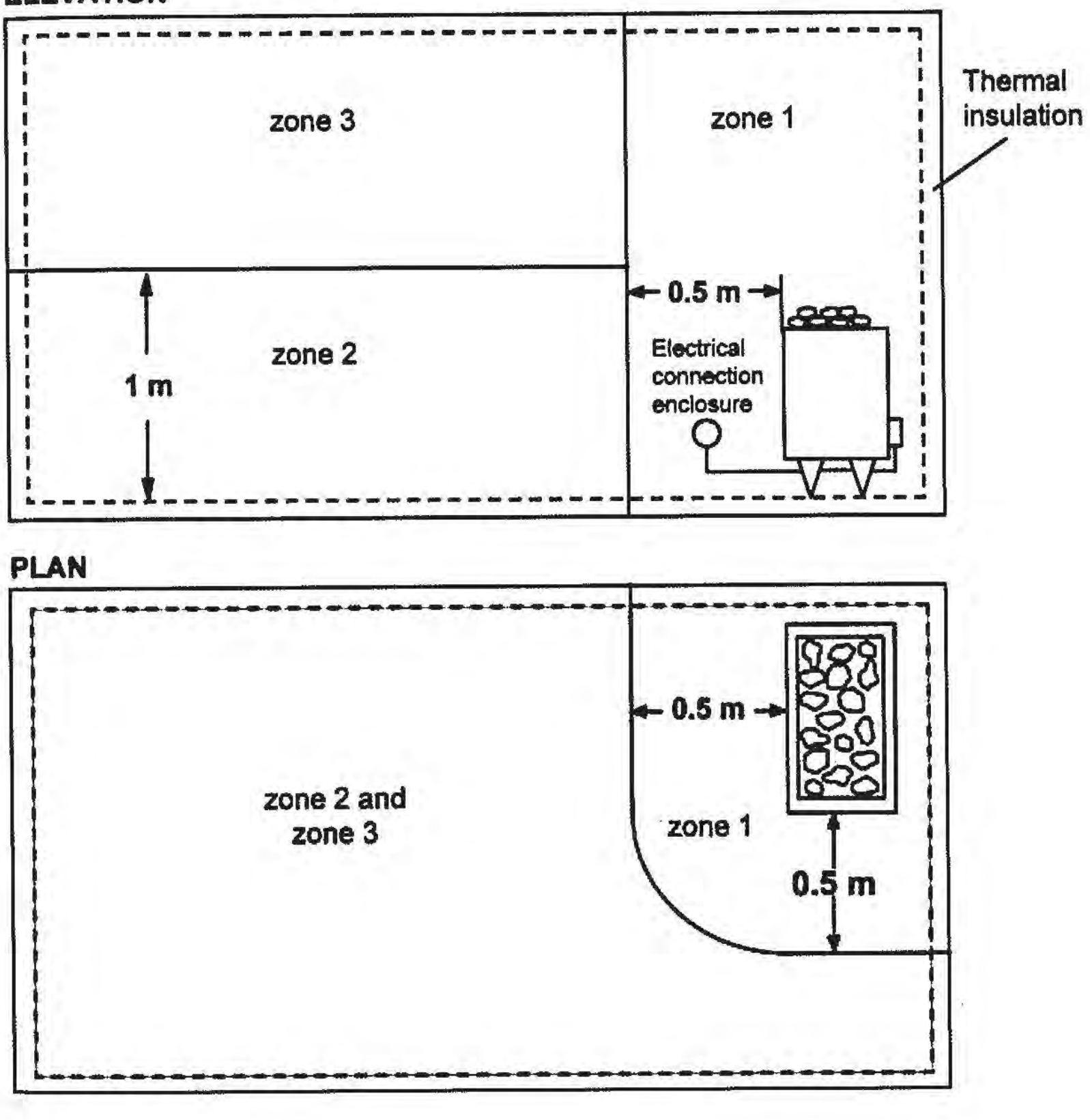

SECTION 704L

TEMPORARY ELECTRICAL INSTALLATIONS FOR CONSTRUCTION AND BUILDING SITES

Refer to SS CP 88-1 for compliance.

COPYRIGHT

SECTION 705

AGRICULTURAL AND HORTICULTURAL PREMISES

705.1L Scope

The particular requirements of this section apply to fixed electrical installations indoors and outdoors in agricultural and horticultural premises. Some of the requirements are also applicable to other locations that are in common buildings belonging to the agricultural and horticultural premises. Where special requirements also apply to residences and other locations in such common buildings this is stated in the text of the relevant clauses.

Rooms, locations and areas for household applications and similar are not covered by this section.

Mains operated electric fence shall be prohibited.

705.41 Protection against electric shock

705.410.3 General requirements

705.410.3.5 The protective measures of obstacles and placing out of reach (see Section 417) are not permitted.

705.410.3.6L The protective measures of non-conducting location (see 418.1) and earth-free local equipotential bonding (see 418.2) are not permitted.

705.411 Protective measure: Automatic disconnection of supply

705.411.1 L General

In circuits, whatever the type of earthing system, the following disconnection devices shall be provided:

(i) In final circuits supplying socket-outlets with rated current not exceeding 32 A, an RCD having the characteristics specified in 415.1.1

(ii) In final circuits supplying socket-outlets with rated current more than 32 A, an RCD with a rated residual operating current not exceeding 100 mA

(iii) In all other circuits, RCDs with a rated residual operating current not exceeding 300 mA.

705.411.4 Reserved for future use

705.414 Protective measure: Extra-low voltage provided by SELV or PELV

705.414.4 Requirements for SELV and PELV circuits

705.414.4.5L Where SELV or PELV is used, whatever the nominal voltage, basic protection shall be provided by:

(i) basic insulation complying with 416.1, or

(ii) barriers or enclosures complying with 416.2.

COPYRIGHT

705.415.2.1L Additional protection: Supplementary equipotential bonding

In locations intended for livestock, supplementary bonding shall connect all exposed-conductive-parts and extraneous- conductive-parts that can be touched by livestock. Where a metal grid is laid in the floor, it shall be included within the supplementary bonding of the location (Figure 705 shows an example of this, other suitable arrangements of a metal grid are not precluded).

Extraneous-conductive-parts in, or on, the floor, e.g. concrete reinforcement in general or reinforcement of cellars for liquid manure, shall be connected to the supplementary equipotential bonding.

It is recommended that spaced floors made of prefabricated concrete elements be part of the supplementary equipotential bonding. The supplementary equipotential bonding and the metal grid, if any, shall be erected so that it is durably protected against mechanical stresses and corrosion.

705.42 Protection against thermal effects

705.422 Measures for protection against fire

705.422.6 Electrical heating appliances used for the breeding and rearing of livestock shall comply with IEC 60335-2-71 and shall be fixed so as to maintain an appropriate distance from livestock and combustible material, to minimise any risks of burns to livestock and of fire. For radiant heaters the clearance shall be not less than 0.5 m or such other clearance as recommended by the manufacturer.

705.422.7L For fire protection purposes, RCDs shall be installed with a rated residual operating current not exceeding 300 mA. RCDs shall disconnect all live conductors. Where improved continuity of service is required, RCDs not protecting socket-outlets shall be of the S type or have a time delay.

NOTE – The protection of the final circuits by RCD required according to 411.1L is also effective for protection against fire.

705.422.8L In locations where a fire risk exists conductors of circuits supplied at extra-low voltage shall be protected either by barriers or enclosures affording a degree of protection of IPXXD or IP4X or, in addition to their basic insulation, by an enclosure of insulating material.

NOTE – For example, cables of the type EPR (Ethylene Propylene Rubber) (BS EN 50525 and BS 6004) for outdoor use are in compliance with this requirement.

705.51 Selection and erection of equipment: Common rules

705.512 Operational conditions and external influences

705.512.2 External influences

In agricultural or horticultural premises, electrical equipment shall have a minimum degree of protection of IP44, when used under normal conditions. Where equipment of IP44 rating is not available, it shall be placed in an enclosure complying with IP44.

Socket-outlets shall be installed in a position where they are unlikely to come into contact with combustible material.

Where there are conditions of external influences >AD4, >AE3 and/or >AG1, socket-outlets shall be provided with the appropriate protection.

Protection may also be provided by the use of additional enclosures or by installation in building recesses.

COPYRIGHT

These requirements do not apply to residential locations, offices, shops and locations with similar external influences belonging to agricultural and horticultural premises where, for socket-outlets, SS 145-2 or SS 472 applies.

Where corrosive substances are present, e.g. in dairies or cattle sheds, the electrical equipment shall be adequately protected.

705.513 Accessibility

705.513.2 Accessibility by livestock

Electrical equipment generally shall be inaccessible to livestock. Equipment that is unavoidably accessible to livestock such as equipment for feeding and basins for watering, shall be adequately constructed and installed to avoid damage by, and to minimise the risk of injury to, livestock.

705.514 Identification

705.514.9 Diagrams and documentation

705.514.9.3 The following documentation shall be provided to the user of the installation:

(i) A plan indicating the location of all electrical equipment

(ii) The routing of all concealed cables

(iii) A single-line distribution diagram

(iv) An equipotential bonding diagram indicating locations of bonding connections.

705.52 Selection and erection of equipment: Wiring systems

705.522 Selection and erection of wiring systems in relation to external influences

In locations accessible to, and enclosing, livestock, wiring systems shall be erected so that they are inaccessible to livestock or suitably protected against mechanical damage.

Overhead lines shall be insulated.

In areas of agricultural premises where vehicles and mobile agricultural machines are operated, the following methods of installation shall be applied:

(i) Cables shall be buried in the ground at a depth of at least 0.6 m with added mechanical protection

(ii) Cables in arable or cultivated ground shall be buried at a depth of at least 1 m

(iii) Self-supporting suspension cables shall be installed at a height of at least 6 m.

705.522.10 Special attention shall be given to the presence of different kinds of fauna, e.g. rodents.

705.522.16 Conduit systems, cable trunking systems and cable ducting systems

For locations where livestock is kept, external influences shall be classified AF4, and conduits shall have protection against corrosion of at least Class 2 (medium) for indoor use and Class 4 (high protection) outdoors according to IEC 61386-21.

COPYRIGHT

For locations where the wiring system may be exposed to impact and mechanical shock due to vehicles and mobile agricultural machines, etc, the external influences shall be classified AG3 and:

(i) conduits shall provide a degree of protection against impact of 5 J according to IEC 61386-21

(ii) cable trunking and ducting systems shall provide a degree of protection against impact of 5 J according to IEC 61084-2-1.

705.53 Selection and erection of equipment: Isolation, switching and control

Only electrical heating appliances with visual indication of the operating position shall be used.

705.537 Isolation and switching

705.537.2 Isolation

The electrical installation of each building or part of a building shall be isolated by a single isolation device according to Chapter 53.

Means of isolation of all live conductors, including the neutral conductor, shall be provided for circuits used occasionally, e.g. during harvest time.

The isolation devices shall be clearly marked according to the part of the installation to which they belong.

Devices for isolation and switching and devices for emergency stopping or emergency switching shall not be erected where they are accessible to livestock or in any position where access may be impeded by livestock.

705.54 Selection and erection of equipment: Earthing arrangements and protective conductors

705.544 Protective bonding conductors

705.544.2 Supplementary bonding conductors

Protective bonding conductors shall be protected against mechanical damage and corrosion, and shall be selected to avoid electrolytic effects.

For example, the following may be used:

(i) Hot-dip galvanised steel strip with dimensions of at least 30 mm × 3 mm

(ii) Hot-dip galvanised round steel of at least 8 mm diameter

(iii) Copper conductor having a minimum cross-sectional area of 4 mm2.

Other suitable materials may be used.

705.55 Selection and erection of equipment: Other equipment

705.553.1 Socket-outlets

Socket-outlets of agricultural and horticultural premises shall comply with:

(i) IEC 60309-1, or

COPYRIGHT

(ii) IEC 60309-2 when interchangeability is required, or

(iii) SS 145 or SS 472 provided the rated current does not exceed 20 A.

705.56 Safety services

705.560.6 Automatic life support for high density livestock rearing

For high density livestock rearing, systems operating for the life support of livestock shall be taken into account as follows:

(i) Where the supply of food, water, air and/or lighting to livestock is not ensured in the event of power supply failure, a secure source of supply shall be provided, such as an alternative or back-up supply (see also Section 551). For the supply of ventilation and lighting units separate final circuits shall be provided. Such circuits shall only supply electrical equipment necessary for the operation of the ventilation and lighting

(ii) Discrimination of the main circuits supplying the ventilation shall be ensured in case of any overcurrent and/or short-circuit to Earth

(iii) Where electrically powered ventilation is necessary in an installation one of the following shall be provided:

(a) A standby electrical source ensuring sufficient supply for ventilation equipment, or

NOTE – A notice should be placed adjacent to the standby electrical source, indicating that it should be tested periodically according to the manufacturer's instructions.

(b) temperature and supply voltage monitoring. This can be achieved by one or more monitoring devices. The device(s) shall provide a visual or audible signal that can be readily observed by the user and shall operate independently from the normal supply.

COPYRIGHT

Figure 705 – Example of supplementary equipotential bonding within a cattle shed

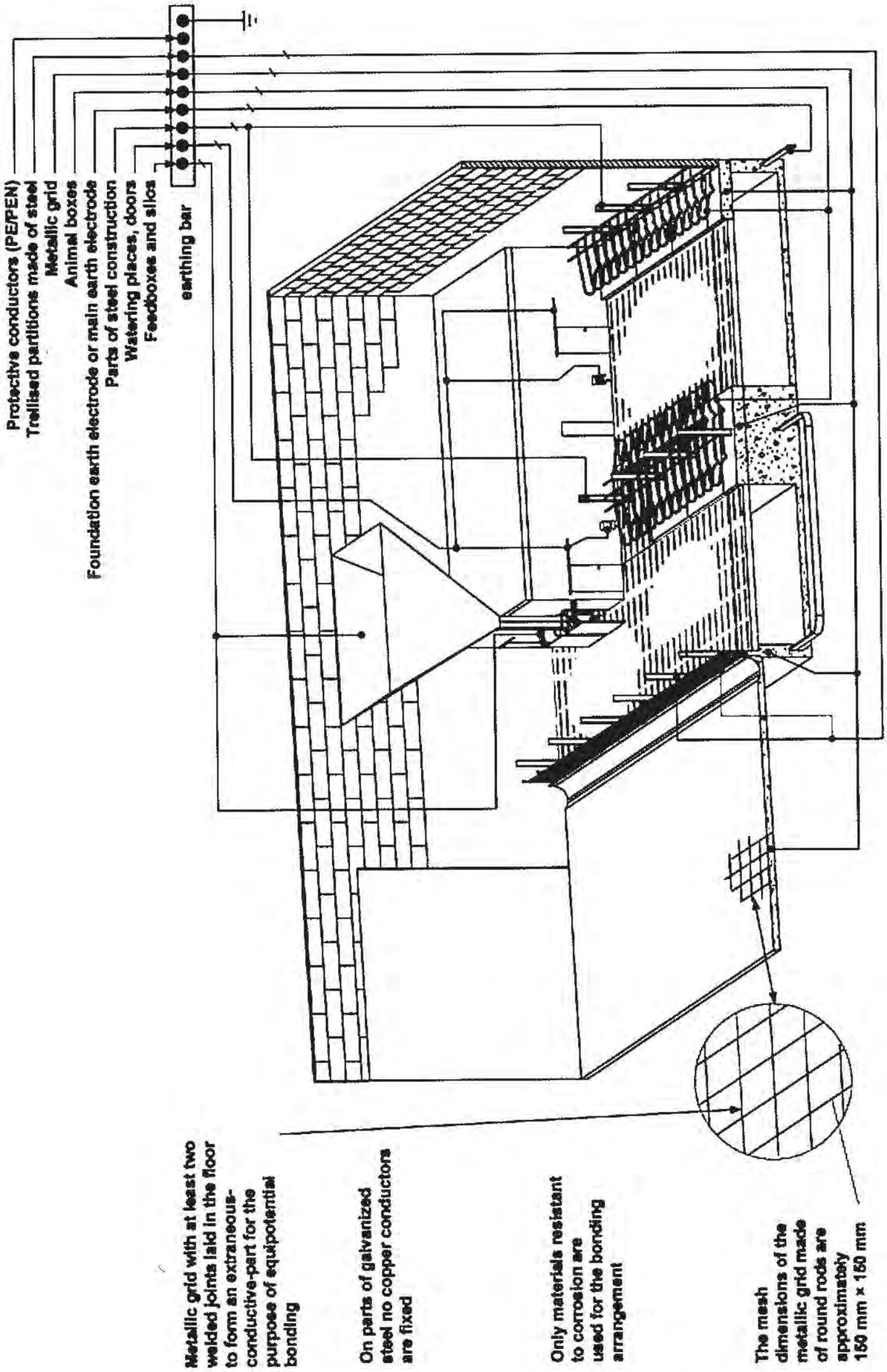

COPYRIGHT

SECTION 706

CONDUCTING LOCATIONS WITH RESTRICTED MOVEMENT

706.1L Scope

The particular requirements of this section apply to:

(i) fixed equipment in conducting locations where movement of persons is restricted by the location, and

(ii) supplies for mobile equipment for use in such locations.

A conducting location with restricted movement is comprised mainly of metallic or other conductive surrounding parts, within which it is likely that a person will come into contact through a substantial portion of the body with the metallic or other conductive surrounding parts and where the possibility of interrupting this contact is limited.

The particular requirements of this section do not apply to locations which allow a person freedom of bodily movement to work, enter and leave the location without physical constraint. For installation and use of arc welding equipment, see IEC 60974-9.

706.41 Protection against electric shock

706.410.3.5 The protective measures of obstacles and placing out of reach (see Section 417) are not permitted.

706.410.3.10L In a conducting location with restricted movement the following protective measures apply to circuits supplying the following current-using equipment:

(i) For the supply to a hand-held tool or an item of mobile equipment:

(a) electrical separation (see Section 413), subject to only one item of equipment being connected to a secondary winding of the transformer, or

NOTE – The transformer may have two or more secondary windings.

(b) SELV (see Section 414).

(ii) For the supply to handlamps:

SELV (see Section 414). It is permissible for the SELV circuit to supply a fluorescent luminaire with a built-in step-up transformer with electrically separated windings.

(iii) For the supply to fixed equipment:

(a) automatic disconnection of the supply (see Section 411) with supplementary equipotential bonding (see 415.2). The supplementary bonding shall connect exposed-conductive-parts of fixed equipment and the conductive parts of the location, or

(b) by use of Class II equipment or equipment having equivalent insulation (see Section 412), provided the supply circuits have additional protection by the use of RCDs having the characteristics specified in 415.1.1, or

COPYRIGHT

(c) electrical separation (see Section 413), subject to only one item of equipment being connected to a secondary winding of the isolating transformer, or

(d) SELV (see Section 414), or

(e) **Reserved for future use**

706.411 Protective measure: Automatic disconnection of supply

706.411.1 General

706.411.1.1 Only circuits and the protective measures for supplying equipment indicated in 706.410.3.10 are permitted.

706.411.1.2 If a functional earth is required for certain equipment, for example measuring and control equipment, equipotential bonding shall be provided between all exposed-conductive-parts and extraneous-conductive-parts inside the conducting location with restricted movement and the functional earth.

706.413 Protective measure: Electrical separation

706.413.1.2 The unearthed source shall have simple separation and shall be situated outside the conducting location with restricted movement, unless the source is part of the fixed installation within the conducting location with restricted movement as provided by item (iii) of 706.410.3.10L.

706.414L Protective measure: Extra-low voltage provided by SELV

706.414.3L Sources for SELV

A source for SELV shall be situated outside the conducting location with restricted movement, unless it is part of the fixed installation within the conducting location with restricted movement as provided by item (iii) of 706.410.3.10L.

706.414.4L Requirements for SELV circuit

706.414.4.5L Where SELV is used, whatever the nominal voltage, basic protection shall be provided by:

(i) basic insulation complying with 416.1, or

(ii) barriers or enclosures complying with 416.2.

SECTIONS 708 to 711

RESERVED FOR FUTURE USE

COPYRIGHT

SECTION 712L

SOLAR PHOTOVOLTAIC (PV) POWER SUPPLY SYSTEMS

712.1L Scope

The particular requirements of this section apply to the electrical installations of PV power supply systems.

712.3 Assessment of general characteristics

712.31 Purpose, supplies and structure

712.312 System earthing

712.312.2L Type of earthing arrangement

Earthing of one of the live conductors of the d.c. side is permitted, if there is at least simple separation between the a.c. side and the d.c. side (e.g. as in the case of an inverter with a built-in transformer).

NOTE – Any connections with Earth on the d.c. side should be electrically connected so as to avoid corrosion (see BS EN 13636 & BS EN 15112).

712.4 Protection for safety

712.41 Protection against electric shock

712.410.3 General requirements

PV equipment on the d.c. side shall be considered to be energised, even when the system is disconnected from the a.c. side.

712.410.3.6L The protective measures of non-conducting location (see 418.1) and earth-free local equipotential bonding (see 418.2) are not permitted on the d.c. side.

712.411 Protective measure: Automatic disconnection of supply

712.411.3.2.1.1 On the a.c. side, the PV supply cable shall be connected to the supply side of the protective device for automatic disconnection of circuits supplying current-using equipment.

712.411.3.2.1.2L Where an electrical installation includes a PV power supply system without at least simple separation between the a.c. side and the d.c. side (e.g. a transformerless inverter) , an RCD installed to provide fault protection by automatic disconnection of supply shall be Type B according to IEC 62423.

The Type B RCD may be omitted if the PV inverters incorporate residual current monitoring device arranged to automatically disconnect the inverter output upon sensing a leakage current exceeding its set point.

Where the PV inverter is, by construction, not able to feed d.c. fault currents into the electrical installation (e.g. an inverter with built-in transformer), an RCD of Type B according to IEC 62423 is not required.

712.412 Protective measure: Double or reinforced insulation

Protection by the use of Class II or equivalent insulation shall preferably be adopted on the d.c. side.

COPYRIGHT

712.414 Protective measure: Extra-low voltage provided by SELV or PELV

712.414.1 General

712.414.1.1 For SELV and PELV systems, Uoc STC replaces U_0 and shall not exceed 120 V d.c.

712.433 Protection against overload on the d.c. side

712.433.1 Overload protection may be omitted to PV string and PV array cables when the continuous current-carrying capacity of the cable is equal to or greater than 1.25 times Isc STC at any location.

712.433.2L Overload protection may be omitted to the PV main cable if the continuous current-carrying capacity is equal to or greater than 1.25 times Isc STC of the PV generator.

NOTE – The requirements of 712.433.1 and 712.433.2L are only relevant for protection of the cables. See also the manufacturer's instructions for protection of PV modules.

712.434 Protection against fault current

712.434.1 The PV supply cable on the a.c. side shall be protected against fault current by an overcurrent protective device installed at the connection to the a.c. mains.

712.444 Protection against electromagnetic disturbances

712.444.4.4 To minimise voltages induced by lightning, the area of all wiring loops shall be as small as possible.

712.5 Selection and erection of equipment

712.51 Common rules

712.511 Compliance with standards

712.511.1L PV modules shall comply with the requirements of IEC 61215-1 for all types of PV modules.

PV modules shall be qualified to and be classified by class according to IEC 61730-1 and shall only be used in applications applicable to their class rating. For building mounted applications, PV modules shall be rated minimum class C module fire class. The module fire class is according to the combined fire test results from both Spread of Flame (SoF) and Burning Brand (BB) tests according to ANSI/UL 790. Below table summarises classification of module fire class according to fire test results:

Module fire class

	Class A SoF	Class B SoF	Class C SoF
Class A BB	Class A	Class B	Class C
Class B BB	Class B	Class B	Class C
Class C BB	Class C	Class C	Class C

The PV array combiner (or junction) box, PV generator combiner (or junction) box and switchgear assemblies shall be in compliance with IEC 61439-1.

712.511.2L The owner of public supply system shall be consulted in respect of particular requirements for solar PV grid connection.

COPYRIGHT

712.512 Operational conditions and external influences

712.512.1.1L Electrical equipment on the d.c. side shall be suitable for d.c. voltages and currents. PV modules may be connected in series up to the maximum allowed operating voltage of the PV modules (Uoc STC of the PV strings) and the PV inverter, whichever is lower. Specifications for this equipment shall be obtained from the equipment manufacturer.

If N multiple strings of PV modules are connected in parallel, then appropriate d.c. fuses or blocking diodes should be connected in series with each PV string, whenever the combined short circuit current Isc of N-1 strings at the lowest operating temperature exceeds the PV module's maximum reverse current.

If blocking diodes are used, their reverse voltage shall be rated for 2 x Uoc STC of the PV string. The blocking diodes shall be connected in series with the PV strings.

If fuses are used, they should be sized below the PV module's maximum reverse current. The fuse current rating I_n shall meet the following two criteria:

$$1.5 \times I_{SC_MOD} < I_n < 2.4 \times I_{SC_MOD}$$

and

$$I_n \leq I_{MOD_MAX_OCPR}$$

Where $I_{MOD_MAX_OCPR}$ is the max over-current protection rating (= max reverse current rating) for the module.

712.512.2.1 As specified by the manufacturer, the PV modules shall be installed in such a way that there is adequate heat dissipation under conditions of maximum solar radiation for the site.

712.513 Accessibility

712.513.1 The selection and erection of equipment shall facilitate safe maintenance and shall not adversely affect provisions made by the manufacturer of the PV equipment to enable maintenance or service work to be carried out safely.

712.52 Selection and erection of wiring systems

712.522 Selection and erection of wiring systems in relation to external influences

712.522.8.1 PV string cables, PV array cables and PV d.c. main cables shall be selected and erected so as to minimise the risk of earth faults and short-circuits.

NOTE – This may be achieved, for example, by reinforcing the protection of the wiring against external influences by the use of single-core sheathed cables.

712.522.8.3L Wiring systems shall withstand the expected external influences such as wind, temperature and solar radiation.

712.53 Isolation, switching and control

712.537 Isolation and switching

712.537.2 Isolation

712.537.2.1.1L To allow maintenance of the PV inverter, means of isolating the PV inverter from the d.c. side and the a.c. side shall be provided.

COPYRIGHT

712.537.2.2 Devices for isolation

712.537.2.2.1 In the selection and erection of devices for isolation and switching to be installed between the PV installation and the public supply, the public supply shall be considered the source and the PV installation shall be considered the load.

712.537.2.2.5L A switch-disconnector shall be provided on the d.c. side of the PV inverter. The switch-disconnector can be either an external device or incorporated as part of the PV inverter. In either case, the switch-disconnector shall comply with IEC 60947-3 and of utilisation category DC21B.

712.537.2.2.5.1L All combiner boxes (PV array and PV generator boxes) shall carry a warning label indicating that parts inside the boxes may still be live after isolation from the PV inverter.

712.54 Earthing arrangements and protective conductors

Where protective bonding conductors are installed, they shall be parallel to and in as close contact as possible with d.c. cables and a.c. cables and accessories.

712.55L Additional requirements for PV installations operating in parallel with public supply system

712.55.1L Care shall be taken to avoid adverse effects to the public supply system and to other installations in respect of power factor, voltage changes, harmonic distortion, unbalance, starting, synchronising or voltage fluctuation effects etc. The PV installation shall also comply with the relevant provisions in the Transmission Code and the owner of public supply system shall be consulted in respect of particular requirements.

712.55.2L Protection shall be provided to automatically disconnect the PV power supply system from the public supply system in the event of loss of that supply or deviation of the voltage or frequency at the supply terminals from values declared for normal supply.

712.55.3L Means shall be provided to prevent the connection of a PV power supply system to the public supply system in the event of loss of that supply or deviation of the voltage or frequency at the supply terminals from values required by 712.55.2L.

712.55.4L Means shall be provided to enable the PV power supply system to be isolated from the public supply system.

Warning notices for dual supply source shall be affixed at the following locations in the installation

(i) At the origin of the installation
(ii) At the meter position, if remote from the origin
(iii) At the consumer unit or distribution board to which the PV power supply system is connected
(iv) At all points of isolation of both sources of supply.

COPYRIGHT

The warning notice shall have the following wording:

WARNING – DUAL SUPPLY

Isolate both mains and on-site PV power supply system before carrying out work.

Isolate the mains supply at .....

Isolate the PV power supply system at .....

COPYRIGHT

Figure 712.1 – PV installation – General schematic – One array

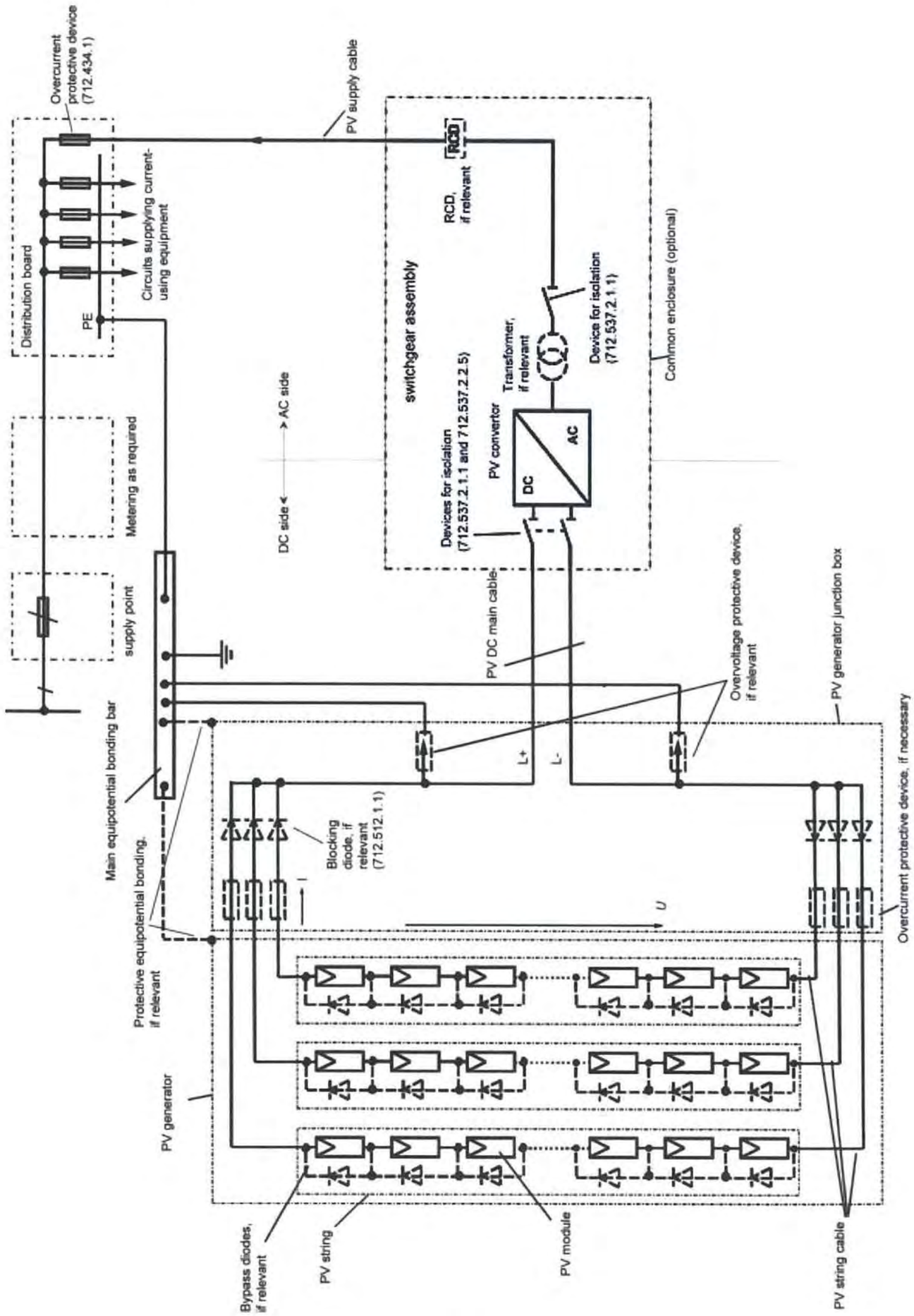

COPYRIGHT

Figure 712.2 – PV installation – Example with two or more arrays

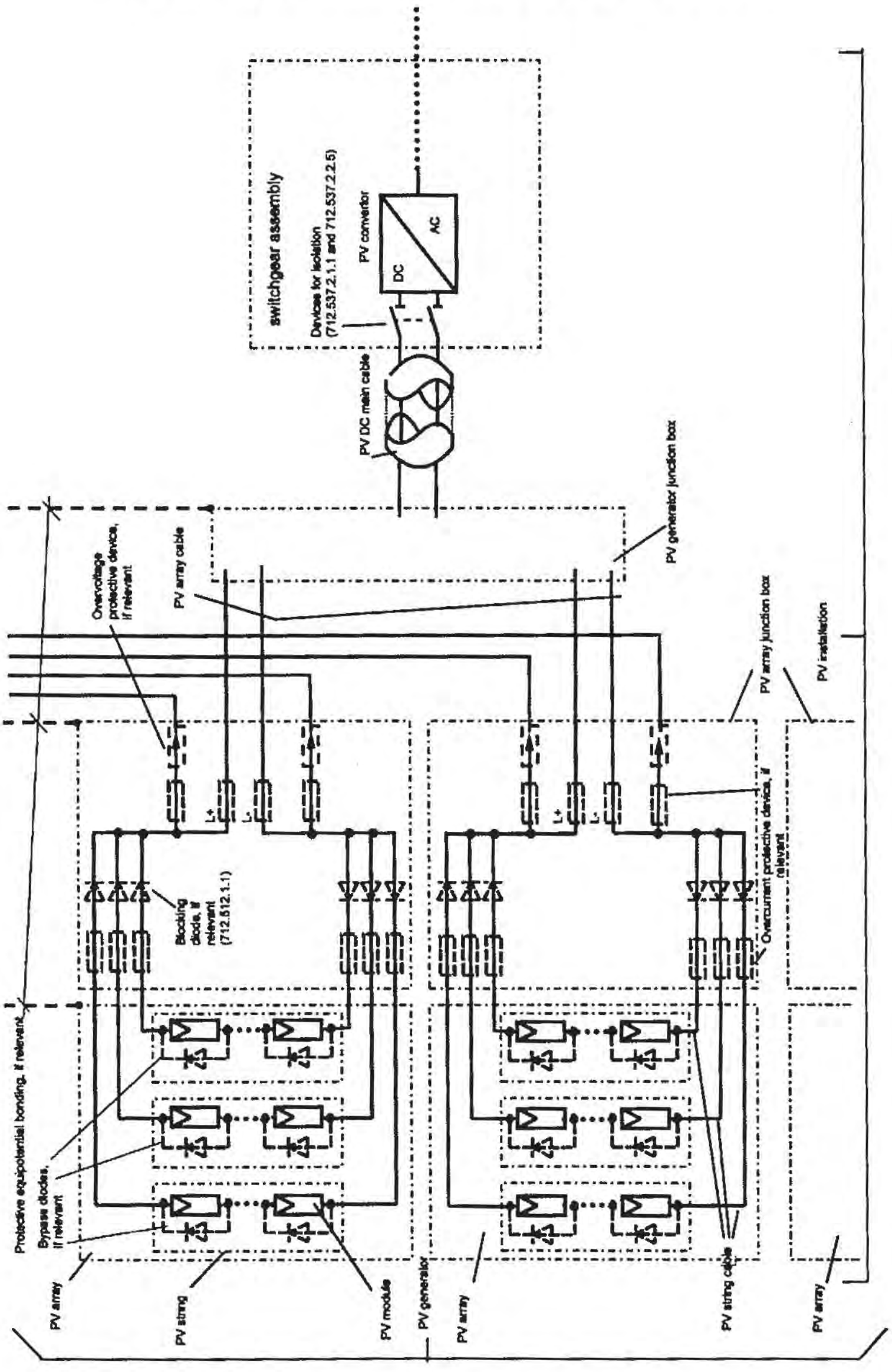

COPYRIGHT

SECTION 714

OUTDOOR LIGHTING INSTALLATIONS

714.1L Scope

This section applies to outdoor lighting installations comprising one or more luminaires, a wiring system and accessories, and to street power supplies and street furniture.

The following are included:

(i) Lighting installations such as those for roads, parks, car parks, gardens, places open to the public, sporting areas, illumination of monuments and floodlighting.

(ii) Other lighting arrangements in places such as telephone kiosks, bus shelters, advertising panels.

(iii) Illuminated road signs.

The following are excluded:

(i) Equipment of Transmission Licensee for distribution of electricity to the public.

(ii) Temporary festoon lighting.

(iii) Luminaires fixed to the outside of a building and supplied directly from the internal wiring of that building.

(iv) Road traffic signal systems.

714.4 Protection for safety

714.41 Protection against electric shock

714.410.3 General requirements

714.410.3.6L The protective measures of non-conducting location (418.1) and earth-free local equipotential bonding (418.2) are not permitted.

714.411 Protective measure: Automatic disconnection of supply

714.411.201 Where the protective measure automatic disconnection of supply is used, all live parts of electrical equipment shall be protected by insulation or by barriers or enclosures providing basic protection. A door in street furniture, used for access to electrical equipment, shall not be used as a barrier or an enclosure.

714.411.202L A maximum disconnection time of 5 s shall apply to all circuits feeding fixed equipment used in highway power supplies for compliance with 411.3.2.3L (TN system) or 411.3.2.4L (TT system).

714.411.203 The earthing conductor of a street electrical fixture shall have a minimum copper equivalent cross-sectional area not less than that of the supply neutral conductor at that point or not less than 6 mm^2, whichever is the smaller.

COPYRIGHT

714.411.2.201 Provisions for basic protection

For every accessible enclosure live parts shall only be accessible with a key or a tool, unless the enclosure is in a location where only skilled or instructed persons have access.

A door giving access to electrical equipment and located less than 2.50 m above ground level shall be locked with a key or shall require the use of a tool for access. In addition, basic protection shall be provided when the door is open either by the use of equipment having at least a degree of protection IPXXB or IP2X by construction or by installation, or by installing a barrier or an enclosure giving the same degree of protection.

For a luminaire at a height of less than 2.80 m above ground level, access to the light source shall only be possible after removing a barrier or an enclosure requiring the use of a tool.

714.411.3.1 Protective earthing and protective equipotential bonding

714.411.3.1.2 Protective equipotential bonding

A metallic structure (such as a fence, grid etc.), which is in the proximity of but is not part of the outdoor lighting installation need not be connected to the main earthing terminal.

714.411.3.3L Additional protection

Lighting in places such as telephone kiosks, bus shelters and signs shall be provided with additional protection by an RCD having the characteristics specified in 415.1.1.

714.5 Selection and erection of equipment

714.51 Common rules

714.512 Operational conditions and external influences

714.512.2 External influences

714.512.2.1L The following classes are generally recommended:

(i) Ambient temperature: AA5 (from +5 °C to +40 °C)

(ii) Climatic conditions: AB5 and AB6 (relative humidity between 5% and 100%).

The classes given for the following external influences are minimum requirements:

(iii) Presence of water: AD4 (splashes)

(iv) Presence of foreign bodies: AE5 (moderate dust).

714.512.2.105L Electrical equipment shall have, by construction or by installation, a degree of protection of at least IP54.

714.512.3 Ground-recessed luminaires

For ground-recessed luminaires, the selection and erection shall take account of the guidance given in Table A.1 of IEC 60598-2-13.

COPYRIGHT

714.514.12L Notices

714.514.12.201 The requirements for notices for:

(i) periodic inspection and testing (514.12.1L) and

(ii) the testing of RCDs (514.12.2)

need not be applied where the installation is subject to a programmed inspection and testing procedure.

714.514.12.202 Reserved for future use

714.537 Isolation and switching

714.537.2 Isolation

714.537.2.1 General

714.537.2.1.1L Every circuit shall be capable of being isolated individually from each of the live supply conductors, except as detailed in 537.1.2.

714.537.2.1.201 Where it is intended that isolation and switching is carried out only by instructed persons and subject to suitable provisions being made so that precautions can be taken to prevent any equipment from being inadvertently or unintentionally energised, for TN systems, the means of switching the supply on load and the means of isolation is permitted to be provided by a suitably rated fuse carrier.

714.537.2.1.202L Where the supplier's cut-out is used as the means of isolation of a street power supply the approval of the supplier shall be obtained.

SECTION 715

EXTRA-LOW VOLTAGE LIGHTING INSTALLATIONS

715.1 Scope

This section applies to extra-low voltage lighting installations supplied from a source with a maximum rated voltage of 50 V a.c. or 120 V d.c.

715.4 Protection for safety

715.41 Protection against electric shock

715.411.7.201 Functional Extra-Low Voltage (FELV)

FELV shall not be used.

715.414 Protective measure: Extra-low voltage provided by SELV or PELV

An extra-low voltage luminaire without provision for the connection of a protective conductor shall be installed only as part of a SELV system. Where bare conductors are used, the nominal voltage shall not exceed 25 V a.c. or 60 V d.c. according to 414.4.5L.

COPYRIGHT

A safety isolating transformer for an extra-low voltage lighting installation shall comply with IEC 61558-2-6 and shall meet at least one of the requirements of 715.422.106.

NOTE 1 – For an explanation of symbols used see Table 55.3.

Parallel operation of transformers in the secondary circuit is allowed only if they are also paralleled in the primary circuit and the transformers have identical electrical characteristics.

An electronic convertor for an extra-low voltage lighting installation shall comply with IEC 61347-2-2, Annex 1 for incandescent lamps or IEC 61347-2-13, Annex 1 for LEDs.

NOTE 2 – For an explanation of symbols used see Table 55.3.

Parallel operation of convertors to IEC 61347-2-2 or IEC 61347-2-13 is not permitted.

715.42 Protection against thermal effects

715.422.106 Fire risk of transformers

Transformers shall be either:

(i) protected on the primary side by a protective device complying with the requirements of 715.422.107.2, or

(ii) short-circuit proof (both inherently and non-inherently).

NOTE – For an explanation of symbols used see Table 55.3.

715.422.107 Fire risk due to short-circuit

715.422.107.1L Where both the live circuit conductors are uninsulated, either:

(i) they shall be provided with a protective device complying with the requirements of 715.422.107.2, or

(ii) they shall be supplied from a transformer or convertor, the power of which does not exceed 200 VA, or

(iii) the system shall comply with IEC 60598-2-23.

715.422.107.2 A device providing protection against the risk of fire shall meet all the following requirements:

(i) The device shall continuously monitor the power demand of the luminaires

(ii) The device shall automatically disconnect the supply circuit within 0.3 s in the case of a short-circuit or failure which causes a power increase of more than 60 W

(iii) The device shall provide automatic disconnection while the supply circuit is operating with reduced power (for example, by gating control or a regulating process or a lamp failure) if there is a failure which causes a power increase of more than 60 W

(iv) The device shall provide automatic disconnection upon connection of the supply circuit if there is a failure which causes a power increase of more than 60 W

(v) The device shall be fail-safe.

NOTE – Account needs to be taken of starting currents.

COPYRIGHT

715.43 Protection against overcurrent

715.430.104 Self-resetting overcurrent protective devices

The use of self-resetting overcurrent protective devices is permitted only for transformers up to 50 VA.

715.5 Selection and erection of equipment

715.52 Wiring systems

715.521 Types of wiring system

715.521.1 The following wiring systems shall be used:

(i) Insulated conductors in conduit systems according to IEC 61386 series or cable trunking/ducting systems according to IEC 61084 series

(ii) Rigid cables

(iii) Flexible cables

(iv) Systems for ELV lighting according to IEC 60598-2-23

(v) Track systems according to IEC 60570

(vi) Bare conductors (see 715.521.106).

Where parts of the ELV lighting installation are accessible, the requirements of Section 423 also apply.

Metallic structural parts of buildings, for example pipe systems, or parts of furniture, shall not be used as live conductors.

715.521.106 Bare conductors

If the nominal voltage does not exceed 25 V a.c. or 60 V d.c., bare conductors may be used providing that the extra-low voltage lighting installation complies with all the following requirements:

(i) The lighting installation shall be designed, and installed or enclosed in such a way that the risk of a short-circuit is reduced to a minimum

(ii) The conductors used shall have a cross-sectional area according to 715.524

(iii) The conductors shall not be placed directly on combustible material.

For suspended bare conductors, at least one conductor and its terminals shall be insulated for that part of the circuit between the transformer and the short-circuit protective device to prevent a short-circuit.

715.521.107 Suspended systems

Suspension devices for extra-low voltage luminaires, including supporting conductors, shall be capable of carrying five times the mass of the luminaires (including their lamps) intended to be supported, but not less than 5 kg.

Terminations and connections of conductors shall be made by screw terminals or screwless clamping devices complying with IEC 60998-2-1 or IEC 60998-2-2.

COPYRIGHT

Safety of the installation due to expected stresses in the conductors shall be in accordance with 559.5.2.

Insulation piercing connectors and termination wires which rely on counterweights hung over suspended conductors to maintain the electrical connection shall not be used.

The suspended system shall be fixed to walls or ceilings by insulated distance cleats and shall be continuously accessible throughout the route.

715.524 Cross-sectional area of conductors

715.524.201 The minimum cross-sectional area of the extra-low voltage conductors shall be:

(i) 1.5 mm^2 copper, but in the case of flexible cables with a maximum length of 3 m a cross-sectional area of 1mm^2 copper may be used

(ii) 4 mm^2 copper in the case of suspended flexible cables or insulated conductors, for mechanical reasons

(iii) 4 mm^2 copper in the case of composite cables consisting of braided tinned copper outer sheath, having a material of high tensile strength inner core.

715.525 Voltage drop in consumers' installations

In ELV lighting installations, if the voltage drop between the transformer and the furthest luminaire does not exceed 5% of the nominal voltage of the ELV installation it shall be deemed to comply with Section 525.

715.53 Isolation, switching and control

715.530.3 General and common requirements

715.530.3.104 Protective devices and SELV sources

Protective devices may be located above false ceilings, which are removable or easily accessible, provided that information is given about the presence and location of such devices.

If the identification of a protective device for a circuit is not immediately evident, a sign or diagram (label) close to the protective device shall identify the circuit and its purpose.

SELV sources, protective devices or similar equipment mounted above false ceilings or in a similar place shall be permanently connected.

SELV sources and their protective devices shall be installed so as to:

(i) avoid mechanical stress on their electrical connections, and

(ii) be adequately supported, and

(iii) avoid overheating of the equipment due to thermal insulation.

715.537 Isolation and switching

715.537.1.1 Where transformers are operated in parallel, the primary circuits shall be permanently connected to a common isolating device.

COPYRIGHT

SECTION 717

RESERVED FOR FUTURE USE

SECTION 721

RESERVED FOR FUTURE USE

SECTION 722L

ELECTRIC VEHICLE CHARGING SYSTEM

Refer to TR 25 for compliance.

SECTION 729

OPERATING AND MAINTENANCE GANGWAYS

729.1 Scope

The particular requirements of this section apply to basic protection and other aspects relating to the operation or maintenance of switchgear and controlgear within areas including gangways, where access is restricted to skilled or instructed persons.

729.3 Assessment of general characteristics

For restricted access areas the following apply:

(i) They shall be clearly and visibly marked by appropriate signs

(ii) They shall not provide access to unauthorised persons

(iii) Doors provided for closed restricted access areas shall allow easy evacuation by opening without the use of a key, tool or any other device not being part of the opening mechanism.

729.513 Accessibility

729.513.2 Requirements for operating and maintenance gangways

The width of gangways and access areas shall be adequate for work, operational access, emergency access, emergency evacuation and for transport of equipment.

Gangways shall permit at least a 90 degree opening of equipment doors or hinged panels (see also Annex A729).

729.513.2.1 Restricted access areas where basic protection is provided by barriers or enclosures

Where basic protection is provided by barriers or enclosures in accordance with Chapter 41, the following minimum dimensions apply (see Figure 729.1):

COPYRIGHT

(i)	Gangway width including between: barriers or enclosures and switch handles or circuit-breakers in the most onerous position, and barriers or enclosures or switch handles or circuit-breakers in the most onerous position and the wall	700 mm
(ii)	Gangway width between barriers or enclosures or other barriers or enclosures and the wall	700 mm
(iii)	Height of gangway to barrier or enclosure above floor	2000 mm
(iv)	Live parts placed out of reach, see 417.3L	2500 mm

NOTE – Where additional workspace is needed e.g. for special switchgear and controlgear assemblies, larger dimensions may be required.

Figure 729.1 – Gangways in installations with protection by barriers or enclosures

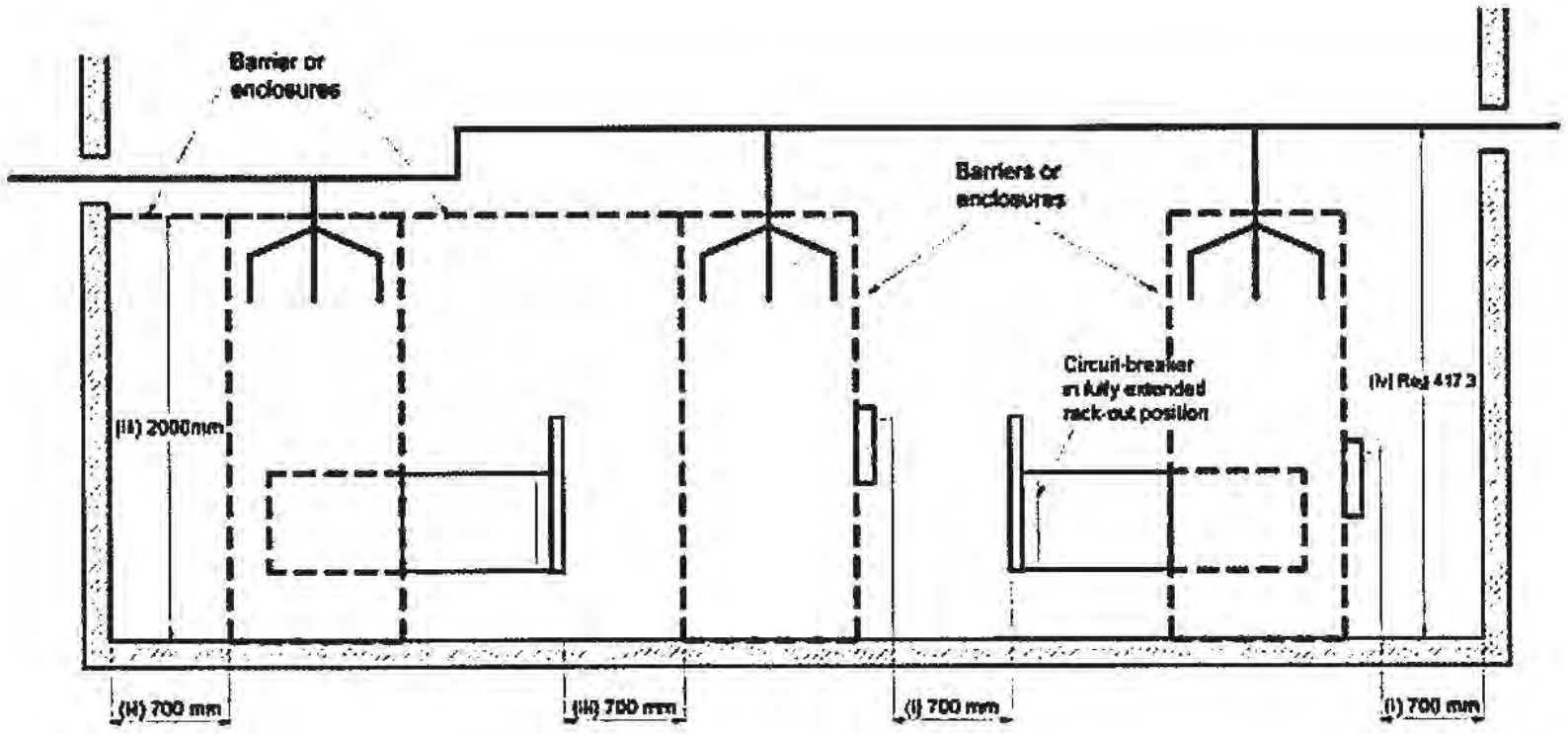

NOTE – The above dimensions apply after barriers and enclosures have been fixed and with circuit-breakers and switch handles in the most onerous position, including "isolation"

729.513.2.2 Restricted access areas where the protective measure of obstacles is applied

Where the protective measure of obstacles is used, the requirements of Section 417, Obstacles and placing out of reach, apply. The measure is for application in those parts of installations controlled or supervised by skilled persons.

COPYRIGHT

The following minimum dimensions apply (see Figure 729.2):

(i)	Gangway width including between: obstacles and switch handles or circuit-breakers in the most onerous position, and obstacles or switch handles or circuit-breakers in the most onerous position and the wall.	700 mm
(ii)	Gangway width between obstacles or other obstacles and the wall	700 mm
(iii)	Height of gangway to obstacles, barrier or enclosure above floor	2000 mm
(iv)	Live parts placed out of reach, see 417.3L	2500 mm

Figure 729.2 – Gangways in installations with protection by obstacles

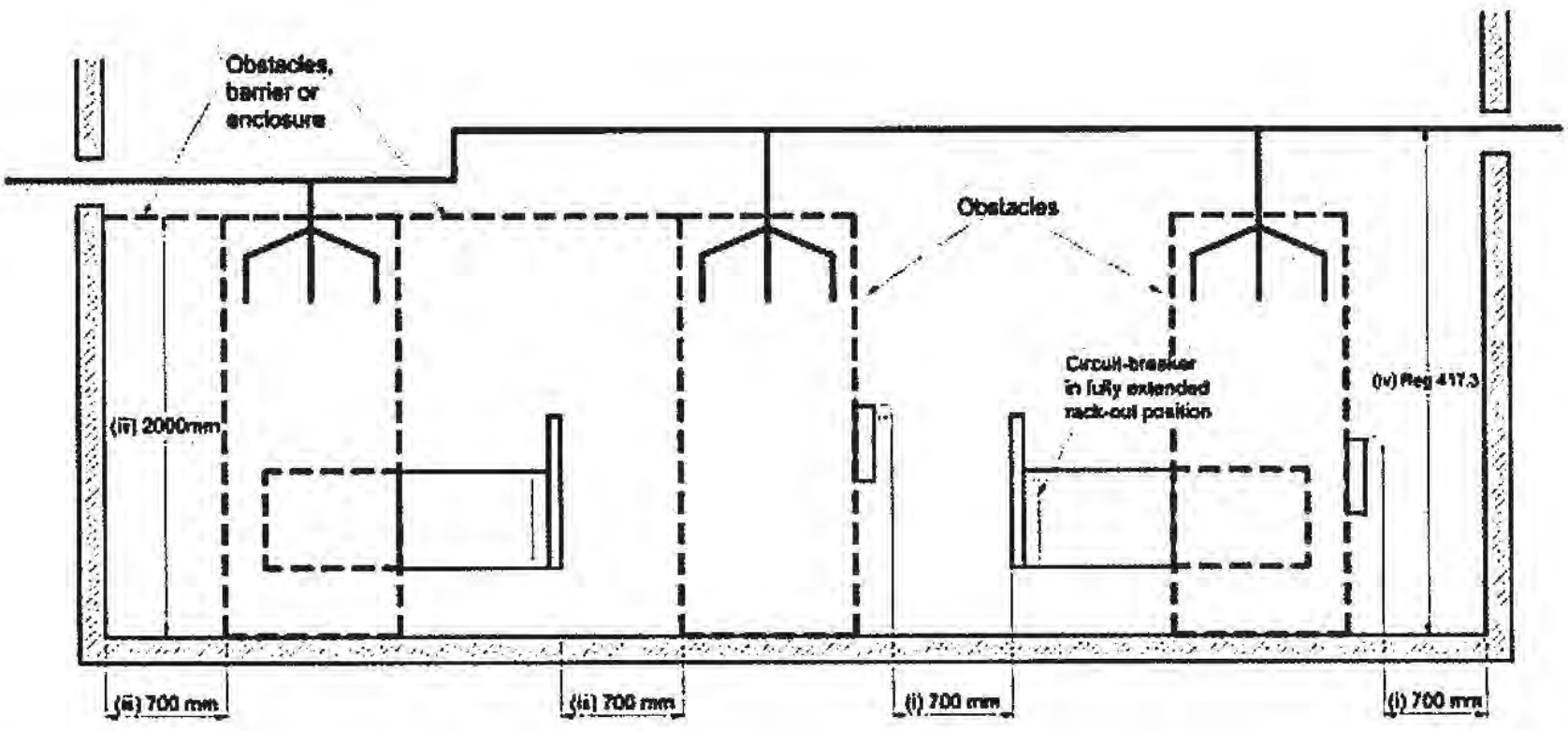

NOTE – The above dimensions apply after all obstacles, barriers and enclosures have been fixed and with circuit-breakers and switch handles in the most onerous position, including "isolation"

729.513.2.3 Access of gangways

Gangways longer than 10 m shall be accessible from both ends.

NOTE 1 – This may be accomplished by placement of the equipment a minimum of 700 mm from all walls (see Figure 729.3) or by providing an access door, if needed, on the wall against which the equipment is positioned.

Closed restricted access areas with a length exceeding 20 m shall be accessible by doors from both ends.

NOTE 2 – For closed restricted access areas with a length exceeding 6 m, accessibility from both ends is recommended.

COPYRIGHT

Figure 729.3 – Examples of positioning of doors in closed restricted access areas

(a)

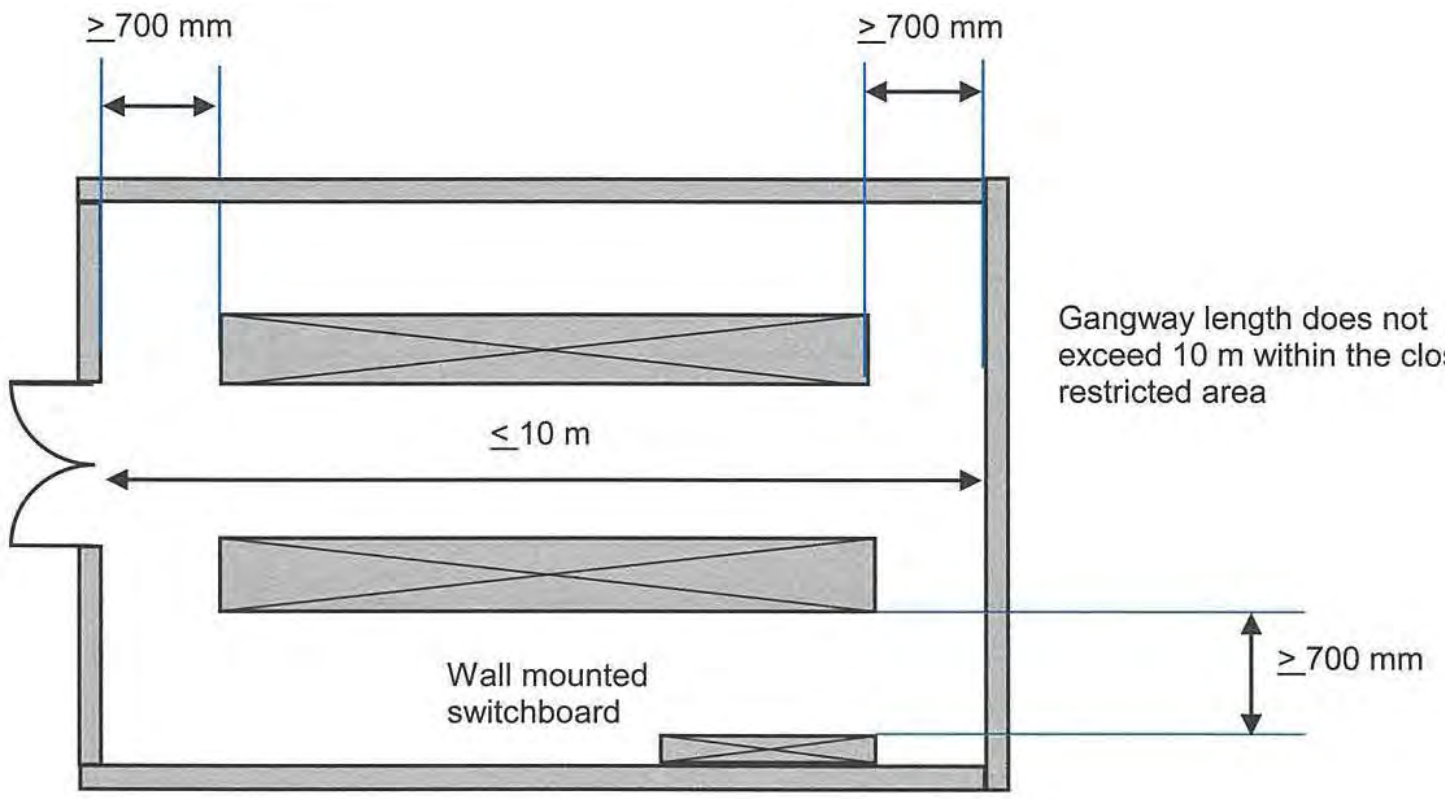

(b)

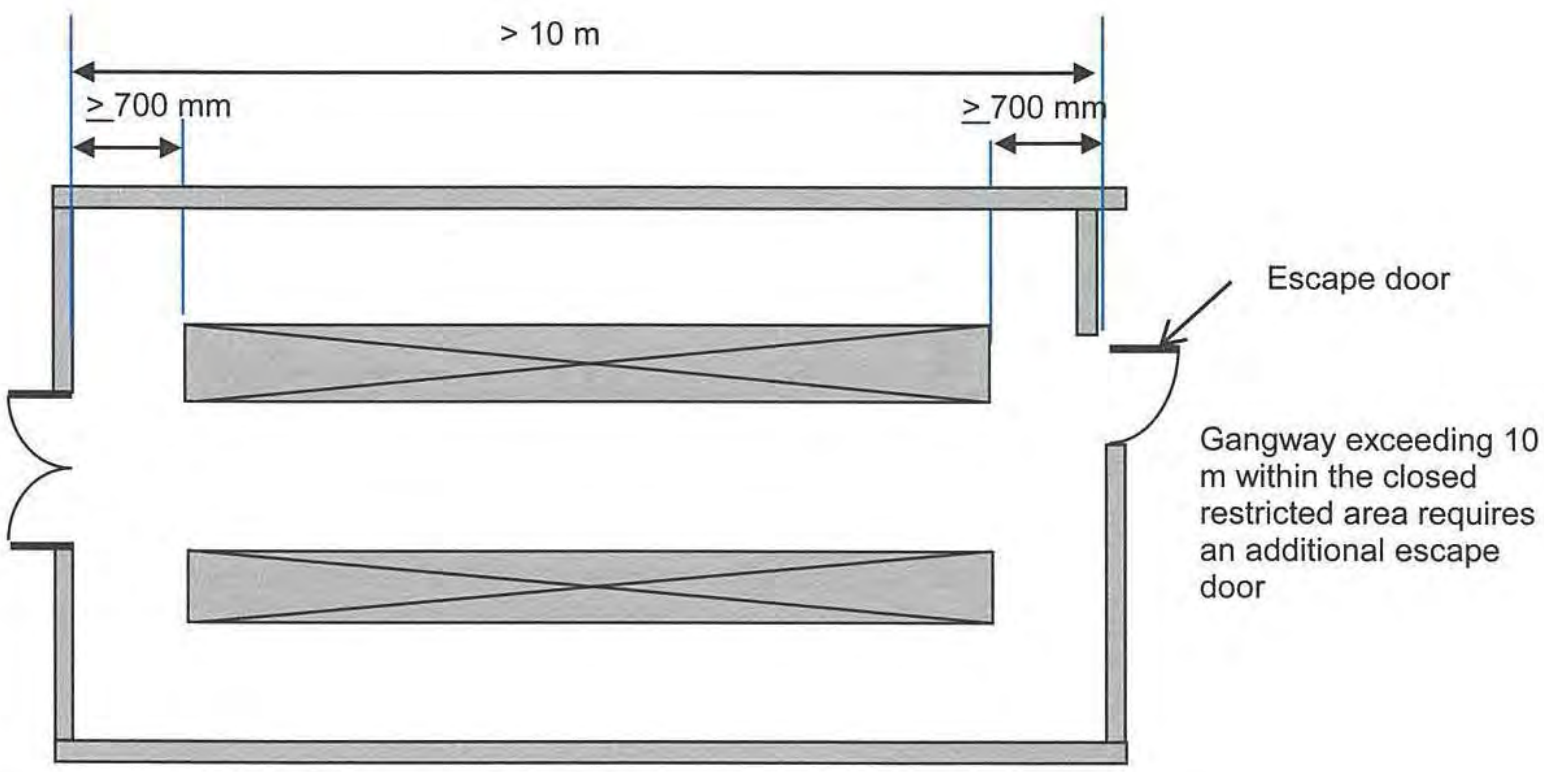

Doors giving access to gangways shall open outwards (see Figure 729.3) and they shall have the following minimum dimensions:

(i) width 700 mm

(ii) height 2000 mm.

COPYRIGHT

Annex A729
(informative)

Additional requirements for closed restricted access areas

A729.1 Evacuation

For reason of easy evacuation, the doors of any equipment inside the location shall close in the direction of the evacuation route (see Figure A729.1). Gangways shall permit at least a 90 degree opening of equipment doors or hinged panels (see Figure A729.2).

Figure A729.1 – Minimum passing width in case of evacuation – Case 1

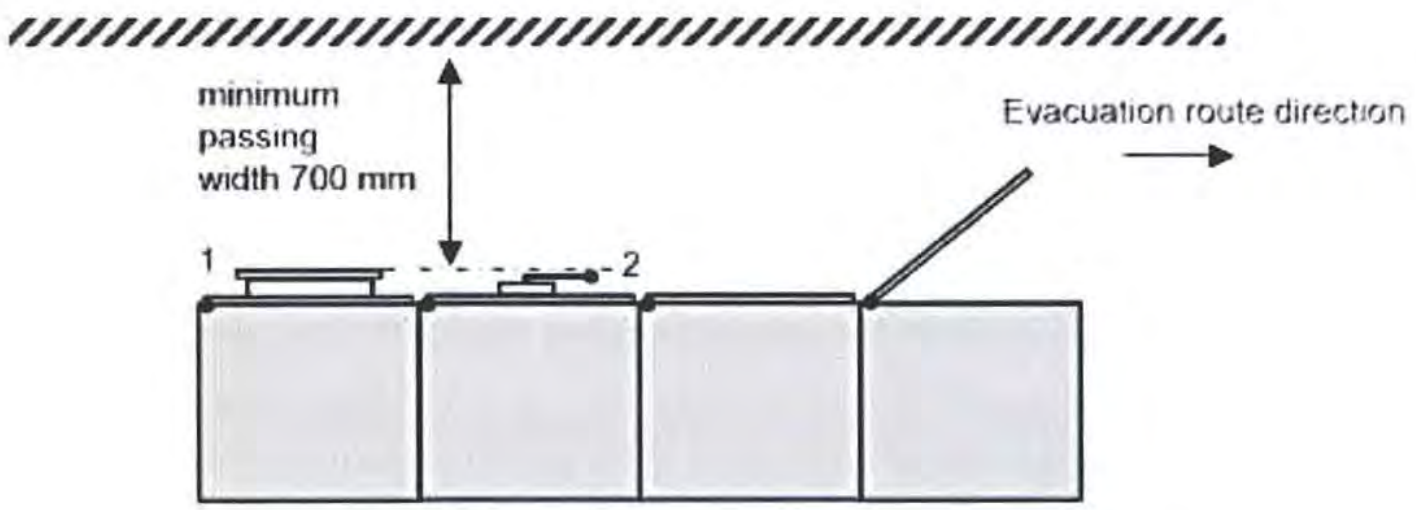

1. Circuit-breaker in the isolated position
2. Handles (e.g. for controls or equipment

In the case of doors which can be fixed in the open position and circuit-breakers which are withdrawn fully for maintenance (completely extracted) a minimum distance of 500 mm shall be complied with between the door edge or circuit-breaker/ equipment edge and the opposite limitation of the gangway (see Figure A729.2).

Figure A729.2 – Minimum passing width in case of evacuation – Case 2

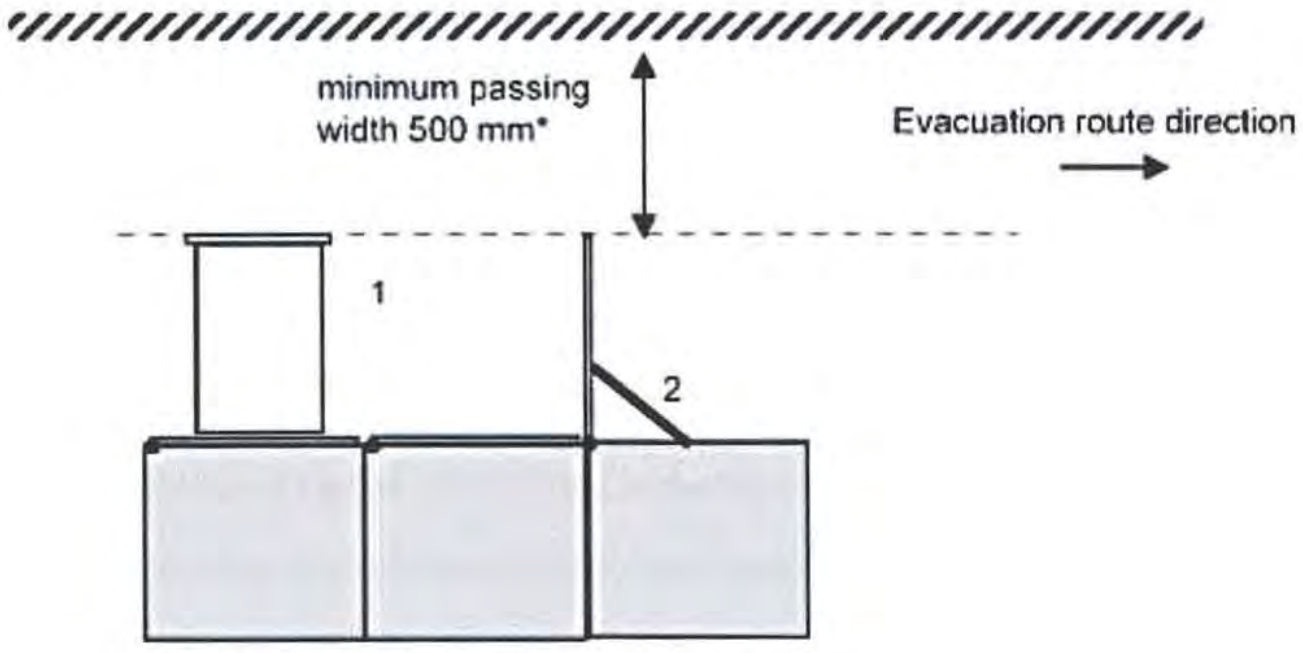

1. Circuit-breaker in the position “completely ectracted”
2. Fixing device of a door
3. The minimum width gangway of 500 mm shall be taken into consideration between the wall and the circuit-breaker in the position “completely extracted” and equipment door in the 90 degree position.

COPYRIGHT

SECTION 740L

TEMPORARY ELECTRICAL INSTALLATIONS FOR FESTIVE LIGHTING, TRADE-FAIRS, MINI-FAIRS AND EXHIBITION SITES

Refer to SS CP 88-2 for compliance.

SECTION 753

RESERVED FOR FUTURE USE

COPYRIGHT

Annex A(L)
(informative)

Medical locations

A.1 Definition

Medical location. Location intended for purposes of diagnosis, treatment including cosmetic treatment, monitoring and care of patients.

- **Applied part.** Part of medical electrical equipment that in normal use necessarily comes into physical contact with the patient for ME equipment or an ME system to perform its function.

- **Group 0.** Medical location where no applied parts are intended to be used and where discontinuity (failure) of the supply cannot cause danger to life.

- **Group 1.** Medical location where discontinuity of the electrical supply does not represent a threat to the safety of the patient and applied parts are intended to be used:

  - externally
  - invasively to any part of the body except where group 2 applies.

- **Group 2.** Medical location where applied parts are intended to be used, and where discontinuity (failure) of the supply can cause danger to life, in applications such as:

  - intracardiac procedures
  - vital treatments and surgical operations.

NOTE – An intracardiac procedure is a procedure whereby an electrical conductor is placed within the heart of a patient or is likely to come into contact with the heart, such conductor being accessible outside the patient's body. In this context, an electrical conductor includes insulated wires such as cardiac pacing electrodes or intracardiac ECG electrodes, or insulated tubes filled with conducting fluids.

- transferring energy to or from the patient or detecting such energy transfer to or from the patient and which is

  - provided with not more than one connection to a particular supply mains, and
  - intended by the manufacturer to be used

    - in the diagnosis, treatment or monitoring of a patient, or
    - for compensation or alleviation of disease, injury or disability.

NOTE – ME equipment includes those accessories as defined by the manufacturer that are necessary to enable the normal use of the ME equipment.

- **Medical electrical system (ME system).** Combination, as specified by the manufacturer, of items of equipment, at least one of which is medical electrical equipment to be interconnected by functional connection or by use of a multiple socket-outlet.

NOTE – The system includes those accessories which are needed for operating the system and are specified by the manufacturer.

- **Medical IT system.** IT electrical system fulfilling specific requirements for medical applications.

NOTE – These supplies are also known as isolated power supply systems.

COPYRIGHT

- **Patient.** Living being (person or animal) undergoing a medical, surgical or dental procedure.

NOTE – A person under treatment for cosmetic purposes may be considered a patient.

- **Patient environment**. Any volume in which intentional or unintentional contact can occur between a patient and parts of the medical electrical equipment or medical electrical system or between a patient and other persons touching parts of the medical electrical equipment or medical electrical system.

NOTE 1 – For illustration see Figure A.1.

NOTE 2 – This applies when the patient's position is predetermined; if not, all possible patient positions should be considered.

A.2 Scope

This section applies to electrical installations in medical locations to ensure the safety of patients and medical staff. These requirements, in the main, refer to hospitals, private clinics, medical and dental practices, healthcare centres and dedicated medical rooms in the workplace.

The requirements of this section do not apply to medical electrical (ME) equipment.

This section also applies to electrical installations in locations designed for medical research.

NOTE 1 – It may be necessary to modify the existing electrical installation, in accordance with this Code, when a change of utilisation of the location occurs. Special care should be taken where intracardiac procedures are performed in existing installations.

NOTE 2 – Where applicable, this Code can also be used in veterinary clinics.

NOTE 3 – For ME equipment and ME systems, refer to the IEC 60601 series.

NOTE 4 – Care should be taken so that other installations do not compromise the level of safety provided by installations meeting the requirements of this section.

NOTE 5 – Supporting information on the electrical installations of medical locations can be found in Health Technical Memorandum (HTM) 06-01 (Part A), published by the UK Department of Health.

A.3 Assessment of general characteristics

In order to determine the classification and Group number of a medical location, it is necessary that the relevant medical staff indicate which medical procedures will take place within the location. Based on the intended use, the appropriate classification for the location shall be determined.

NOTE 1 – Classification of a medical location is related to the type of contact between applied parts and the patient, the threat to the safety of the patient owing to a discontinuity (failure) of the electrical supply, as well as the purpose for which the location is used. Guidance on the allocation of a group number and classification of safety services for medical locations is shown in Table AA.1.

NOTE 2 – To ensure protection of patients from possible electrical hazards, additional protective measures are applied in medical locations. The type and description of these hazards can vary according to the treatment being administered. The purpose for which a location is to be used may justify areas with different classifications (Group 0, 1 or 2) for different medical procedures.

NOTE 3 – Applied parts are defined by the particular standards for ME equipment.

NOTE 4 – Where a medical location may be used for different medical procedures the requirements of the higher group classification should be applied; refer to Table AA.1.

COPYRIGHT

A.31 Purpose, supplies and structure

A.312.2 Reserved for future use

A.313 Supplies

A.313.1 General

In medical locations, the distribution system shall be designed and installed to facilitate the automatic changeover from the main distribution network to the electrical safety source feeding essential loads, as required by 560.5.

Electrical power supplies for medical locations shall be categorised as follows:

Normal Load - Electricity supply from public supply system without backup elements

Essential Load - Power supply provided with back-up diesel generator

Critical Load - Power supply provided with back-up from standby diesel generator and uninterruptible power supplies.

A.4 Protection for safety

A.41 Protection against electric shock

A.410.3 General requirements

A.410.3.5 The protective measures of obstacles and placing out of reach (Section 417) are not permitted.

A.410.3.6 The protective measures of non-conducting location (see 418.1), earth-free local equipotential bonding (see 418.2) and electrical separation for the supply to more than one item of current-using equipment (see 418.3L) are not permitted.

NOTE – A medical IT system does not use electrical separation as the sole means of protection against electric shock.

A.411.3 Requirements for fault protection (protection against indirect contact)

A.411.3.2 Automatic disconnection in case of a fault

A.411.3.2.1 Care shall be taken to ensure that simultaneous use of many items of equipment connected to the same circuit cannot cause unwanted tripping of the residual current protective device (RCD).

In medical locations of Group 1 and Group 2, where RCDs are required, only type A according to SS 97 and SS 480 or type B according to IEC 62423 shall be selected, depending on the possible fault current arising. Type AC RCDs shall not be used.

A.411.3.2.5 In medical locations of Group 1 and Group 2, the following shall apply:

(i) For TN, TT and IT systems, the voltage presented between simultaneously accessible exposed-conductive-parts and/or extraneous-conductive-parts shall not exceed 25 V a.c. or 60 V d.c.

(ii) For TN and TT systems, the requirements of Table A.1 shall apply.

COPYRIGHT

Table A.1 – Maximum disconnection times

System	25 V < U_0 ≤ 50 V		50 V < U_0 ≤ 120 V		120 V < U_0 ≤ 230 V		230 V < U_0 ≤ 400 V		U_0 > 400 V	
	seconds									
	a.c.	d.c.	a.c.	d.c.	a.c.	d.c.	a.c.	d.c.	a.c.	d.c.
TN	5	5	0.3	2	0.3	0.5	0.05	0.06	0.02	0.02
TT	5	5	0.15	0.2	0.05	0.1	0.02	0.06	0.02	0.02

NOTE – In TN systems, 25 V a.c. or 60 V d.c. may be met with protective equipotential bonding, by complying with the disconnection time in accordance with Table A.1.

A.411.3.3 Additional protection

Where a medical IT system is used, additional protection by means of an RCD shall not be used.

A.411.4 TN system

In final circuits of Group 1 rated up to 63 A, RCDs having the characteristics specified in 415.1.1 shall be used.

In medical locations of Group 2 (except for the medical IT system), RCDs having the characteristics specified in 415.1.1 shall only be used in circuits for:

(i) the supply of movements of fixed operating tables

(ii) X-ray units

(iii) large equipment with a rated power greater than 5 kVA.

NOTE 1 – The list of circuits in (i) to (iii) above is not exhaustive.

NOTE 2 – The requirement in (ii) above is mainly applicable to mobile X-ray units brought into Group 2 locations.

A.411.5 TT system

In medical locations of Group 1 and Group 2, RCDs shall be used as protective devices and the requirements of A.411.4 apply.

A.411.6 IT system

A.411.6.3.1 In Group 2 medical locations, an IT system shall be used for final circuits supplying ME equipment and systems intended for life support, surgical applications and other electrical equipment located or that may be moved into the "patient environment", excluding equipment listed in A.411.4.

For each group of rooms serving the same function, at least one IT system is necessary. The IT system shall be equipped with an insulation monitoring device (IMD) in accordance with IEC 61557-8, with the following additional specific requirements:

(i) Internal a.c. impedance shall be ≥ 100 kΩ

(ii) Internal resistance shall be ≥ 250 kΩ

(iii) Test voltage shall be ≤ 25 V d.c.

(iv) Injected current, even under fault conditions, shall be ≤ 1 mA peak

COPYRIGHT

(v) Indication shall take place when the insulation resistance has decreased to 50 kΩ. If the response value is adjustable, the lowest possible setpoint value shall be ≥ 50 kΩ. A test device shall be provided

(vi) Response and alarm-off time shall be ≤ 5 s.

NOTE 1 – An indication is recommended if the protective earth (PE) or wiring connection of the IMD is lost.

For each medical IT system, an audible and visual alarm system, incorporating the following components, shall be provided so that it can be permanently monitored by the medical staff and any alarm reported to technical staff:

(vii) A green signal lamp to indicate normal operation

(viii) A yellow signal lamp which lights when the minimum value set for the insulation resistance is reached. It shall not be possible for this light to be cancelled or disconnected

(ix) An audible alarm which sounds when the minimum value set for the insulation resistance is reached. This audible alarm may be silenced

(x) The yellow signal shall extinguish on removal of the fault and when the normal condition is restored.

Documentation shall be easily readable in the medical location and it shall include:

(xi) The meaning of each type of signal, and

(xii) The procedure to be followed in case of an alarm at first fault.

NOTE 2 – For illustration of a typical theatre layout refer to Figure A.2.

NOTE 3 – A system constructed to the requirements of A.411.6.3.1 is known as a medical IT system.

A.411.6.3.2 Monitoring of overload and high temperature for the IT transformer is required.

A.411.6.3.3 In addition to an insulation monitoring device, consideration shall be given to the installation of fault location systems which localise insulation faults in any part of the medical IT system.

The insulation fault location system shall be in accordance with IEC 61557-9.

A.411.7 Functional extra-low voltage (FELV)

In medical locations, functional extra-low voltage (FELV) is not permitted as a method of protection against electric shock.

A.414 Protective measure: Extra-low voltage provided by SELV or PELV

A.414.1 General

When using SELV and/or PELV circuits in medical locations of Group 1 and Group 2, the nominal voltage applied to current-using equipment shall not exceed 25 V a.c. rms or 60 V ripple-free d.c. Protection by basic insulation of live parts as required by 416.1 or by barriers or enclosures as required by 416.2, shall be provided.

A.414.4.1 In medical locations of Group 2, where PELV is used, exposed-conductive-parts of equipment, e.g. operating theatre luminaires, shall be connected to the circuit protective conductor.

COPYRIGHT

A.415.2 Additional protection: Supplementary equipotential bonding

A.415.2.1 In each medical location of Group 1 and Group 2, supplementary equipotential bonding shall be installed and the supplementary bonding conductors shall be connected to the equipotential bonding busbar for the purpose of equalising potential differences between the following parts, which are located or that may be moved into the "patient environment":

(i) Protective conductors

(ii) Extraneous-conductive-parts

(iii) Screening against electrical interference fields, if installed

(iv) Connection to conductive floor grids, if installed

(v) Metal screens of isolating transformers, via the shortest route to the earthing conductor. Supplementary equipotential bonding connection points for the connection of ME equipment shall be provided in each medical location, as follows:

(vi) Group 1: a minimum of one per patient location

(vii) Group 2: a minimum of four but not less than 25% of the number of medical IT socket-outlets provided per patient location.

NOTE – Fixed conductive non-electrical patient supports such as operating theatre tables, physiotherapy couches and dental chairs, should be connected to the equipotential bonding conductor unless they are intended to be isolated from earth.

A.415.2.2 In medical locations of Group 1:

(i) The resistance of the protective conductors between the earth terminal of any socket-outlet (or fixed equipment) and any exposed-conductive-part and/or extraneous-conductive-part shall be such that the voltages given in A.411.3.2.5(i) are not exceeded, and

(ii) The measured resistance between the earth terminal of any socket-outlet (or fixed equipment) and any extraneous-conductive-part shall not exceed 0.7 Ω.

In medical locations of Group 2, the measured resistance of the protective conductor between the earth terminal of any socket-outlet (or fixed equipment) and any extraneous-conductive-part shall not exceed 0.2 Ω.

NOTE – In TN and TT systems, a value of 25 V a.c. or 60 V d.c. may be obtained by the provision of protective equipotential bonding in conjunction with circuit protective conductors for the particular circuit. In the case of TT systems a satisfactory value of RA will also be required.

A.415.2.3 The equipotential bonding busbar shall be located in or near the medical location. Connections shall be so arranged that they are accessible, labelled, clearly visible and can easily be disconnected individually.

NOTE 1 – In medical locations the equipotential bonding busbar (EBB) is also referred to as the earth reference bar (ERB).

NOTE 2 – It is recommended that radial wiring patterns are used to avoid "earth loops" that may exacerbate electromagnetic disturbances.

A.444 Measures against electromagnetic disturbances

Special considerations have to be made concerning electromagnetic interference (EMI) and electromagnetic compatibility (EMC).

COPYRIGHT

A.5 Selection and erection of equipment

A.51 Common rules

A.511.1 Distribution boards

Distribution boards shall meet the requirements of IEC 61439 series.

Distribution boards for Group 2 locations shall be installed in close proximity to the areas they serve and be clearly labelled.

A.512 Operational conditions and external influences

A.512.1 Operational conditions

A.512.1.1 Transformers for IT systems

Transformers shall be in accordance with IEC 61558-2-15, installed in close proximity to the medical location and with the following additional requirements:

(i) The leakage current of the output winding to earth and the leakage current of the enclosure, when measured in no-load condition and with the transformer supplied at rated voltage and rated frequency, shall not exceed 0.5 mA

(ii) At least one single-phase transformer per room or functional group of rooms shall be used to form the IT systems for mobile and fixed equipment. The rated output shall be not less than 0.5 kVA and shall not exceed 10 kVA. Where several transformers are needed to supply equipment in one room, they shall not be connected in parallel

(iii) If the supply of three-phase loads via an IT system is also required, a separate three-phase transformer shall be provided for this purpose.

For monitoring see A.411.6.3.1.

Capacitors shall not be used in transformers for medical IT systems.

A.512.1.2 Power supply for medical locations of Group 2

In the event of a first fault to earth, a total loss of supply in Group 2 locations shall be prevented.

A.512.2.1 Explosion risk

Electrical devices, e.g. socket-outlets and switches, installed below any medical-gas outlets for oxidising or flammable gases shall be located at a distance of at least 0.2 m from the outlet (centre to centre), so as to minimise the risk of ignition of flammable gases.

NOTE – Requirements for ME equipment for use in conjunction with flammable gases and vapours are contained in IEC 60601 series.

A.514.9 Diagrams and documentation

A.514.9.1 Plans of the electrical installation together with records, drawings, wiring diagrams and modifications relating to the medical location, shall be provided. Information provided shall include but not be limited to:

(i) Single-line overview diagrams showing the distribution system of the normal power supply and power supply for safety services in a single-line representation

COPYRIGHT

(ii) Distribution board block diagrams showing switchgear and control gear and distribution boards in a single-line representation

(iii) Schematic diagrams of controls

(iv) The verification of compliance with the requirements of standards

(v) Functional description for the operation of the safety power supply services and of the safety power supply system.

A.52 Selection and erection of wiring systems

Any wiring system within Group 2 medical locations shall be exclusively for the use of equipment and accessories within those locations.

A.53 Protection, isolation, switching, control and monitoring

A.531.1 Overcurrent protective devices - protection of wiring systems in medical locations of Group 2

Overload current protection shall not be used in either the primary or secondary circuit of the transformer of a medical IT system.

Overcurrent protection against overload and short-circuit currents is required for each final circuit.

NOTE 1 – Overcurrent protective devices (e.g. fuses) may be used in the primary circuit of the transformer for short-circuit protection only.

NOTE 2 – Figure A.3 shows a typical medical IT system arrangement.

A.531.2 RCDs

A.531.2.4 Socket-outlets protected by RCDs

For each circuit protected by an RCD having the characteristics specified in 415.1.1, consideration shall be given to reduce the possibility of unwanted tripping of the RCD due to excessive protective conductor currents produced by equipment during normal operation.

A.537 Isolation and switching

A.537.1 General

Automatic changeover devices shall be arranged so that safe separation between supply lines is maintained. Automatic changeover devices shall comply with IEC 60947-6-1.

A.55 Other equipment

A.553.1L Socket-outlet circuits for medical locations of Group 2

Socket-outlets intended to supply ME equipment shall be properly labelled. The rocker switch for switched socket outlets shall be colour coded as follows:

- Normal Load - WHITE
- Essential Load - RED
- Critical Load - GREEN

COPYRIGHT

At each patient's place of treatment, e.g. bedheads, the configuration of socket-outlets shall be as follows:

(i) Each socket-outlet supplied by an individually protected circuit, or

(ii) Several socket-outlets separately supplied by a minimum of two circuits.

Socket-outlets used on medical IT systems shall be coloured blue and be clearly and permanently marked "Medical Equipment Only".

NOTE - Guidance is given in Health Technical Memorandum (HTM) 06-01 (Part A).

A.559 Luminaires and lighting installations

In medical locations of Group 1 and Group 2, at least two different sources of supply shall be provided. One of the sources shall be connected to the electrical supply system for essential services.

A.56 Safety services

A power supply for essential services is required which will maintain the supply for continuous operation for a defined period within a pre-set changeover time.

The essential power supply system shall automatically take over if the voltage of one or more incoming live conductors, at the main distribution board of the building, has dropped for more than 0.5 s and by more than 10% in regard to the nominal voltage; refer to Table AA.1 for list of examples.

A.560.4 Classification

Classification of safety services is given in 560.4.1.

NOTE – Safety services provided for locations having differing classifications should meet that classification which gives the highest security of supply.

A.560.5.5 General requirements for safety power supply sources of Group 1 and Group 2

Primary cells are not allowed as essential power sources.

An additional main incoming power supply, from the general power supply, is not regarded as a source of the essential power supply.

The availability (readiness for service) of safety power sources shall be monitored and indicated at a suitable location.

A.560.5.6 In case of a failure of the general power supply source, the power supply for safety services shall be energised to feed the equipment stated in A.560.6.1.1 to A.560.6.1.3 with electrical energy for a defined period of time and within a predetermined changeover period.

A.560.5.7 Where socket-outlets are supplied from the essential power supply source they shall be readily identifiable according to their safety services classification.

A.560.6 Electrical sources for essential services

A.560.6.1 Detailed requirements for safety power supply services

NOTE – Also refer to A.560.5.5.

COPYRIGHT

A.560.6.1.1 Power supply sources with a changeover period less than or equal to 0.5 s

In the event of a voltage failure on one or more line conductors at the distribution board, a safety power supply source shall be used and be capable of providing power for a period of at least 3 h for the following:

(i) Luminaires of operating theatre tables

(ii) ME equipment containing light sources being essential for the application of the equipment, e.g. endoscopes, including associated essential equipment, e.g. monitors

(iii) Life-supporting ME equipment.

The duration of 3 h may be reduced to 1 h for items (ii) and (iii) above if a power source meeting the requirements of A.560.6.1.2 is installed.

The normal power supply shall be restored within a changeover period not exceeding 0.5 s.

NOTE – Guidance relating to the autonomy of battery inverter units for theatre luminaires is provided in HTM 06-01 (Part A).

A.560.6.1.2 Power supply sources with a changeover period less than or equal to 15 s

Equipment meeting the requirements of A.560.9.1 and A.560.11 shall be connected within 15 s to a safety power supply source capable of maintaining it for a minimum period of 24 h, when the voltage of one or more live conductors at the main distribution board for the safety services has decreased by more than 10% of the nominal value of supply voltage and for a duration greater than 3 s.

A.560.6.1.3 Power supply sources with a changeover period greater than 15 s

Equipment, other than that covered by A.560.6.1.1 and A.560.6.1.2, which is required for the maintenance of hospital services, shall be connected either automatically or manually to a safety power supply source capable of maintaining it for a minimum period of 24 h. This equipment may include, for example:

(i) Sterilisation equipment

(ii) Technical building installations, in particular air conditioning, heating and ventilation systems, building services and waste disposal systems

(iii) Cooling equipment

(iv) Catering equipment

(v) Storage battery chargers.

A.560.7 Circuits of essential services

The circuit which connects the power supply source for essential services to the main distribution board shall be considered a safety circuit.

A.560.9 Emergency lighting systems

A.560.9.1 Safety lighting

In the event of mains power failure, the changeover period to the essential source shall not exceed 15 s. The necessary minimum illuminance shall be provided for the following:

COPYRIGHT

(i) Emergency lighting and exit signs

(ii) Locations for switchgear and control gear for emergency generating sets, for main distribution boards of the normal power supply and for power supply for safety services

(iii) Rooms in which essential services are intended. In each such room at least one luminaire shall be supplied from the power source for safety services

(iv) Locations of central fire alarm and monitoring systems

(v) Rooms of Group 1 medical locations; in each such room at least one luminaire shall be supplied from the power supply source for safety services

(vi) Rooms of Group 2 medical locations; a minimum of 90 % of the lighting shall be supplied from the power source for safety services.

The luminaires of the escape routes shall be arranged on alternate circuits.

A.560.11 Other services

Other services which may require a essential service supply with a changeover period not exceeding 15 s include, for example, the following:

(i) Selected lifts for firefighters

(ii) Ventilation systems for smoke extraction

(iii) Paging/communication systems

(iv) ME equipment used in Group 2 medical locations which serves for surgical or other procedures of vital importance. Such equipment will be defined by responsible staff

(v) Electrical equipment of medical gas supply including compressed air, vacuum supply and narcosis (anaesthetics) exhaustion as well as their monitoring devices

(vi) Fire detection and fire alarms

(vii) Fire extinguishing systems.

A.6 Inspection and testing

NOTE – The testing of equipment connected to the electrical installation is outside the scope of this document. For ME equipment refer to IEC 62353.

A.61 Initial verification

The dates and results of each verification shall be recorded.

The tests specified below under items (i) to (iii), in addition to the requirements of Chapter 61, shall be carried out, both prior to commissioning and after alteration or repairs and before re-commissioning:

(i) Complete functional tests of the insulation monitoring devices (IMDs) associated with the medical IT system including insulation failure, transformer high temperature, overload, discontinuity and the audible and/or visual alarms linked to them

(ii) Measurements of leakage current of the output circuit and of the enclosure of the medical IT transformers in no-load condition, as specified by A.512.1.1(i)

COPYRIGHT

(iii) Measurements to verify that the resistance of the supplementary equipotential bonding is within the limits stipulated by A.415.2.2.

NOTE – The tests specified within HTM 06-01 (Part A) may also be required as part of client requirements.

A.62 Periodic inspection and testing

NOTE 1 – In addition to the requirements of Chapter 62, (to ensure consistency with final numbering) the following procedures are recommended at the given intervals:

(i) Annually - Complete functional tests of the insulation monitoring devices (IMDs) associated with the medical IT system including insulation failure, transformer high temperature, overload, discontinuity and the audible/visual alarms linked to them

(ii) Annually - Measurements to verify that the resistance of the supplementary equipotential bonding is within the limits stipulated by A.415.2.2.

(iii) Every 3 years - Measurements of leakage current of the output circuit and of the enclosure of the medical IT transformers in no-load condition, as specified by A.512.1.1(i)

NOTE 2 – Guidance on periodic inspection and testing is given in HTM 06-01 (Part B). Client or local Health Authority requirements, if any, may apply.

Figure A.1 – Example of patient environment (IEC 60601 series)

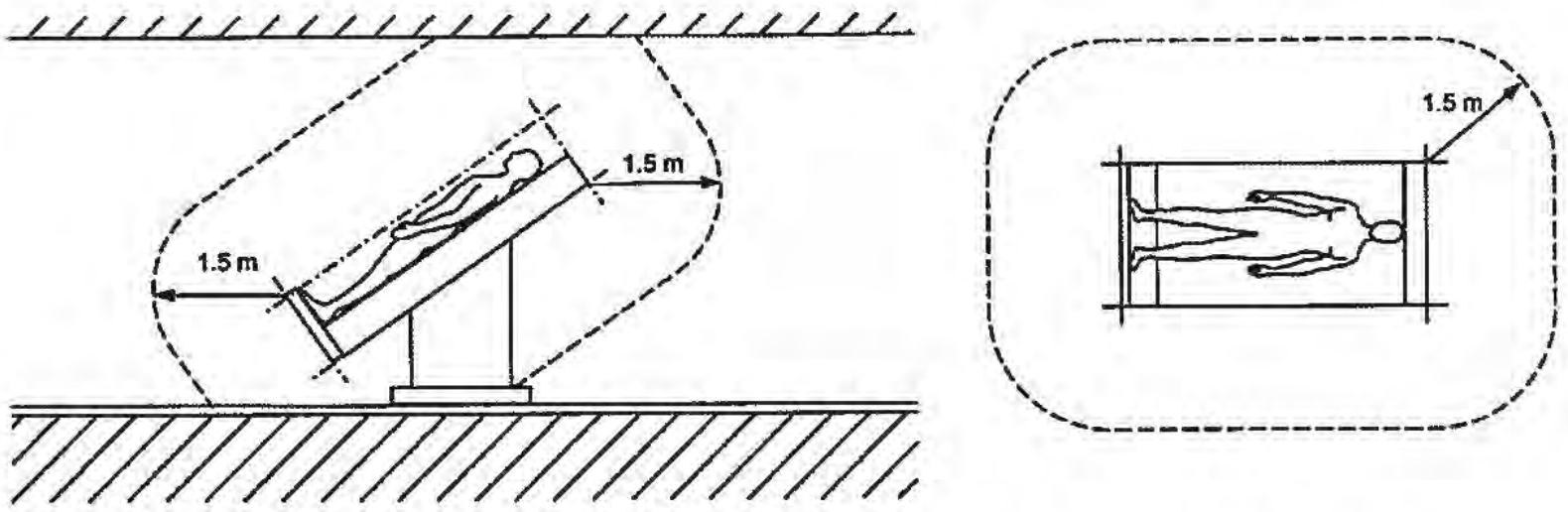

NOTE: The dimensions in the figure show the minimum extent of the patient environment in a free surrounding. This applies where the patient's position is predetermined; if not, all possible patient positions should be considered (see *Patient environment, Part 2, Definitions*).

COPYRIGHT

Figure A.2 – Typical theatre layout

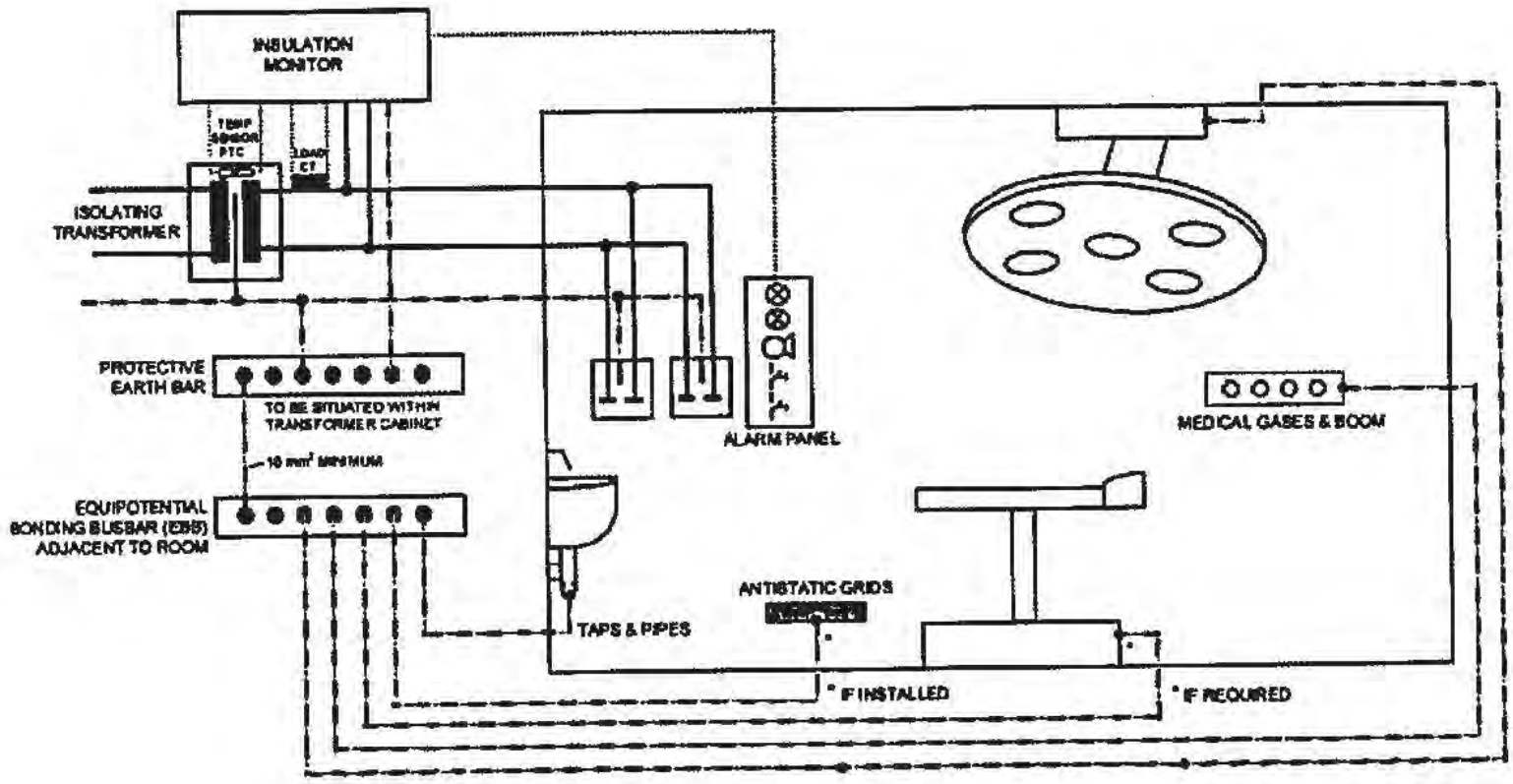

Figure A.3 – Typical medical IT system arrangement

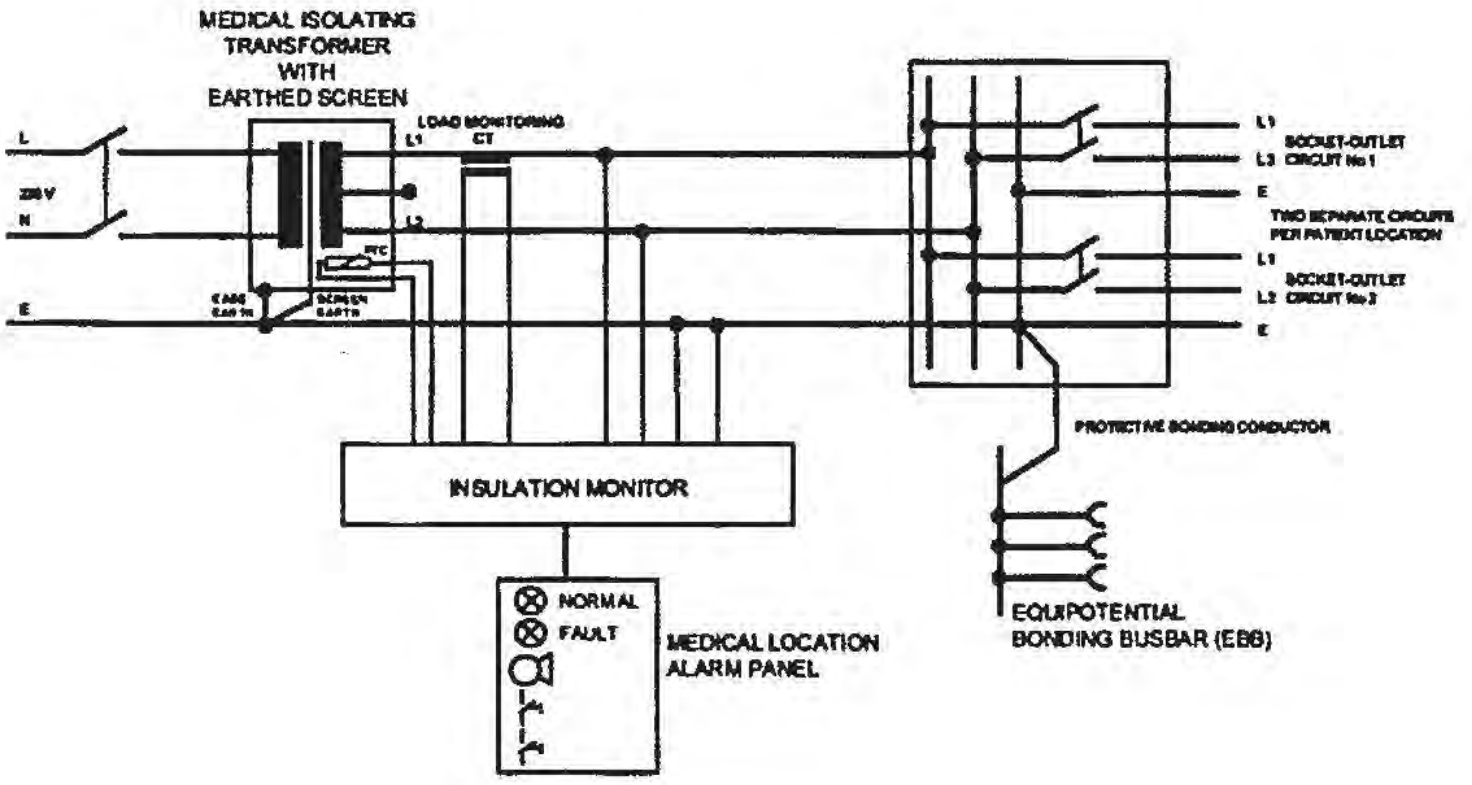

COPYRIGHT

Annex AA
(informative)

Medical locations

Examples for allocation of Group numbers and classification for safety services of medical locations

A definitive list of medical locations showing their assigned Groups is impracticable, as is the use to which locations (rooms) might be put. The accompanying list of examples is provided as a guide only and should be read in conjunction with A.3.

Table AA.1 – List of examples

Medical location	Group			Classification	
	0	1	2	≤ 0.5 s	> 0.5 s ≤ 15 s
1 1 Massage room	X	X			X
2 2 Bedrooms		X			X
3 Delivery room		X		X[a]	X
4 ECG, EEG, EHG room		X			X
5 Endoscopic room		X[b]		X	X[b]
6 Examination or treatment room		X		X	X
7 Urology room		X[b]		X	X[b]
8 Radiological diagnostic and therapy room		X	X	X	X
9 Hydrotherapy room		X			X
10 Physiotherapy room		X			X
11 Anaesthetic area			X	X[a]	X
12 Operating theatre			X	X[a]	X
13 Operating preparation room			X	X[a]	X
14 Operating plaster room			X	X[a]	X
15 Operating recovery room			X	X[a]	X
16 Heart catheterisation room			X	X[a]	X
17 Intensive care room			X	X[a]	X
18 Angiographic examination room			X	X[a]	X
19 Haemodialysis room		X			X
20 Magnetic resonance imaging (MRI) room		X	X	X	X
21 Nuclear medicine		X			X
22 Premature baby room			X	X[a]	X
23 Intermediate Care Unit (IMCU)			X	X	X

a Luminaires and life-support medical electrical equipment which needs power supply within 0.5 s or less.

b Not being an operating theatre.

COPYRIGHT

Annex B(L)
(informative)

Revised cable colour code



REVISED CABLE COLOUR CODE

COPYRIGHT

CHANGE OF COLOUR CODE FOR IDENTIFICATION OF CONDUCTORS IN THREE-PHASE ELECTRICAL INSTALLATIONS

For three-phase fixed electrical installations, the new colours for identification of three-phase conductors are brown, black and grey. The new colour for neutral conductor is blue. The green-and-yellow identification for protective conductor remains unchanged.

Single-core cables that are coloured green-and-yellow throughout their length shall only be used as a protective conductor.

EXISTING

PROTECTIVE CONDUCTOR	LINE 1	LINE 2	LINE 3	NEUTRAL
GREEN-AND-YELLOW	RED	YELLOW	BLUE	BLACK



NEW

PROTECTIVE CONDUCTOR	LINE 1	LINE 2	LINE 3	NEUTRAL
GREEN-AND-YELLOW	BROWN	BLACK	GREY	BLUE



CHANGE OF COLOUR CODE FOR IDENTIFICATION OF CONDUCTORS IN SINGLE-PHASE ELECTRICAL INSTALLATIONS

For single-phase fixed electrical installations, the new colours for identification of live conductor and neutral conductor are brown and blue respectively. The green-and-yellow identification for protective conductor remains unchanged.

Single-core cables that are coloured green-and-yellow throughout their length shall only be used as a protective conductor.

EXISTING

PROTECTIVE CONDUCTOR	LINE	NEUTRAL
GREEN-AND-YELLOW	RED	BLACK



NEW

PROTECTIVE CONDUCTOR	LINE	NEUTRAL
GREEN-AND-YELLOW	BROWN	BLUE



COPYRIGHT

IDENTIFICATION OF CONDUCTORS FOR BOTH A.C. AND D.C. CIRCUITS

FUNCTION	ALPHA-NUMERIC	COLOUR IDENTIFICATION
Protective conductors		Green-and-yellow
Functional earthing conductor		Cream
A.C. POWER CIRCUIT (1)		
Phase of single-phase Circuit	L	Brown
Neutral of single-phase or three-phase circuit	N	Blue
Phase 1 of three-phase a.c. circuit	L1	Brown
Phase 2 of three-phase a.c. circuit	L2	Black
Phase 3 of three-phase a.c. circuit	L3	Grey
TWO-WIRE UNEARTHED D.C. POWER CIRCUIT		
Positive of two-wire circuit	L+	Brown
Negative of two-wire circuit	L-	Grey
THREE-WIRE D.C. POWER CIRCUIT		
Outer positive of two-wire circuit derived from three-wire system	L+	Brown
Outer negative of two-wire circuit derived from three-wire system	L-	Grey
Positive of three-wire d.c. circuit	L+	Brown
Mid-wire of three-wire d.c. circuit (2)(3)	M	Blue
Negative of three-wire d.c. circuit	L-	Grey

FUNCTION	ALPHA-NUMERIC	COLOUR IDENTIFICATION
TWO-WIRE EARTHED D.C. POWER CIRCUIT		
Positive (of negative earthed) circuit	L+	Brown
Negative (of negative earthed) circuit (2)	M	Blue
Positive (of positive earthed) circuit (2)	M	Blue
Negative (of positive earthed) circuit	L-	Grey
CONTROL CIRCUITS, ELV AND OTHER APPLICATIONS		
Phase conductor	L	Brown, Black, Red, Orange, Yellow, Violet, Grey, White, Pink, Turquoise
Neutral or mid-wire (4)	N or M	Blue

(1) Power circuits include lighting circuits
(2) M identifies either the mid-wire of a three-wire d.c. circuit, or the earthed conductor of a two-wire earthed d.c. circuit.
(3) Only the mid-wire of three-wire circuits may be earthed.
(4) An earthed PELV conductor is blue.

GUIDE TO COLOUR MARKING FOR THREE-PHASE CIRCUITS

Durable and legible markings shall be provided at the interface where the new and old versions of colour code for fixed electrical wiring exists.

A warning notice (see Figure 1 on page 10) shall also be displayed prominently at the appropriate distribution board that controls the circuit.

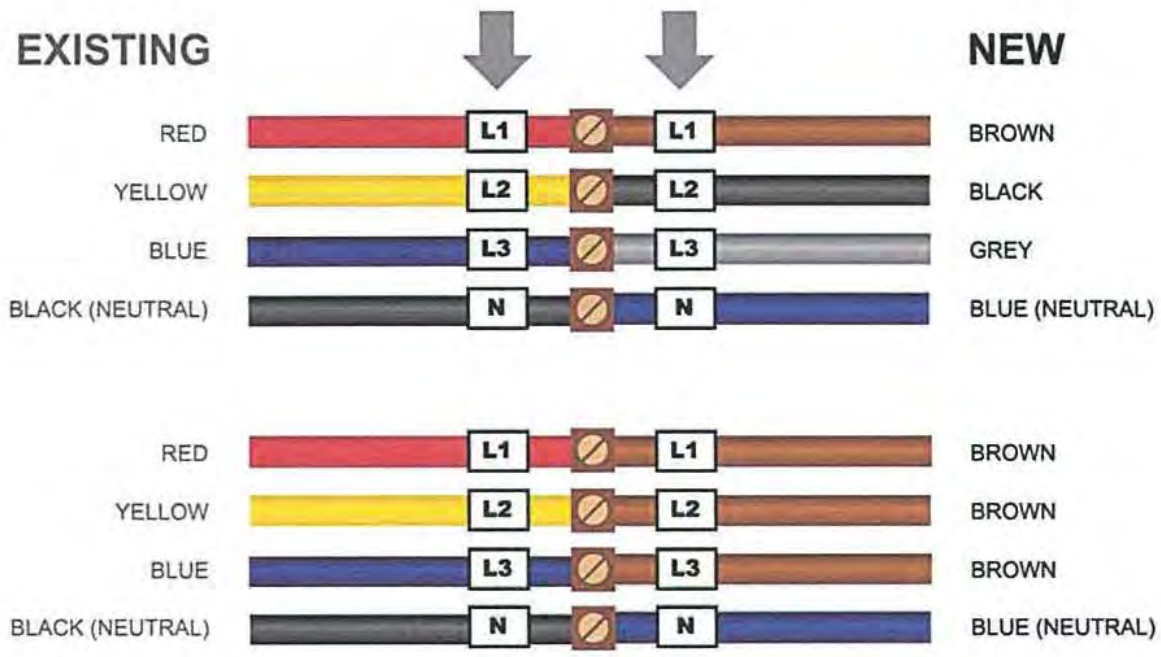

COPYRIGHT

GUIDE TO COLOUR MARKING FOR THREE-PHASE CIRCUITS

In Singapore, the following two types of single-core cables are commonly used in electrical installations: i.e.

a. XLPE-insulated/pvc-sheathed (in black colour), and
b. pvc-insulated/pvc-sheathed (in grey colour).

For identification of conductors, proper labelling and colour sleeving shall be provided at the interface as shown. A warning notice (see Figure 1 on page 10) shall also be displayed prominently at the appropriate distribution board that controls the circuit.

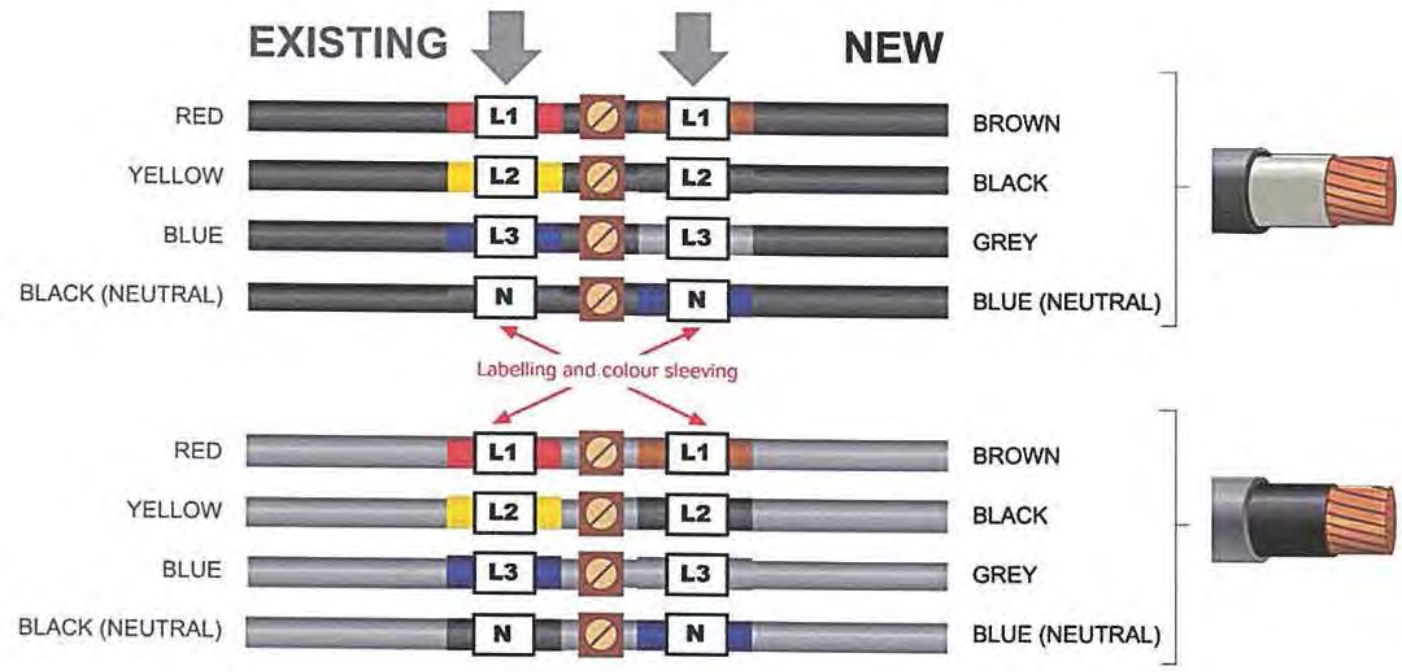

GUIDE TO COLOUR MARKING FOR SINGLE-PHASE CIRCUITS

Durable and legible markings shall be provided at the interface where the new and old versions of colour code for fixed electrical wiring exists.

A warning notice (see Figure 1 on page 10) shall also be displayed prominently at the appropriate distribution board that controls the circuit.

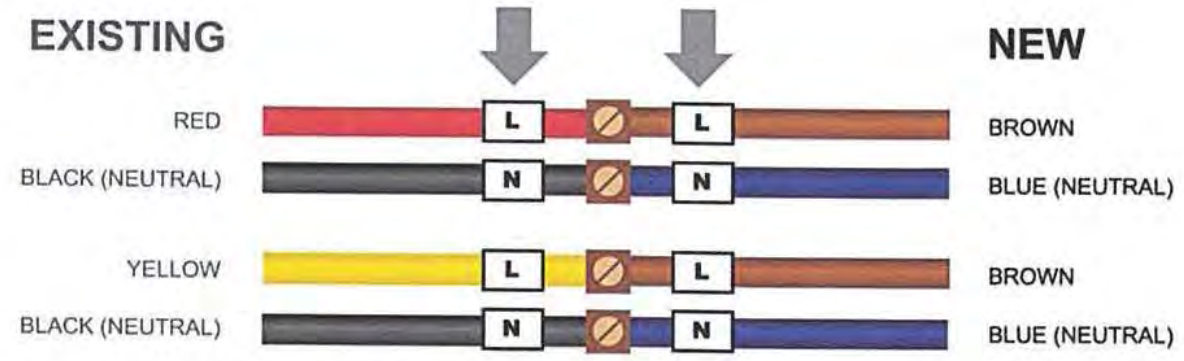

Where the existing blue-coloured cable (phase conductor) is to be connected to a new brown-coloured cable (phase conductor) of the same circuit, at the interface, the existing blue-coloured cable shall be labelled and provided with brown-coloured sleeve as shown to avoid confusion.

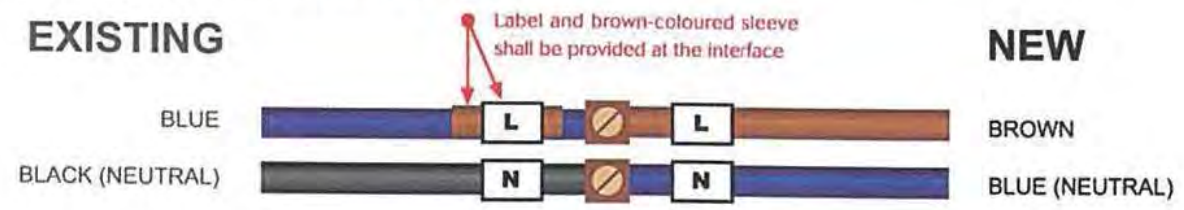

COPYRIGHT

WARNING NOTICE

A warning notice shall be affixed conspicuously at the appropriate distribution board that controls the circuit where the new and old versions of colour code for fixed electrical wiring exists.

CAUTION

This installation has both old and new cable colour codes. Great care should be taken before undertaking extension, alteration or repair that all conductors are correctly identified.

NOTE: Warning Notice shall have words in black against a yellow background and shall be durably marked in legible type not smaller than that illustrated here.

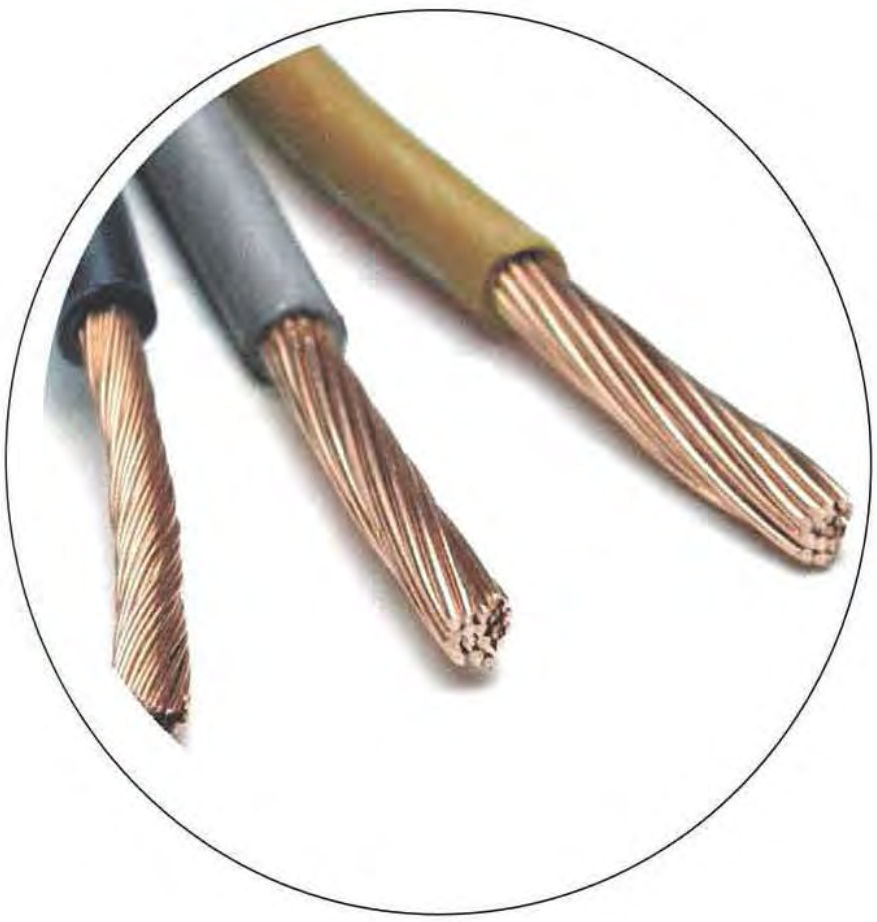

ILLUSTRATED EXAMPLES

COLOUR MARKING FOR ELECTRICAL INSTALLATIONS

COPYRIGHT

EXAMPLE 1 COLOUR MARKING FOR NEW CIRCUITS TO EXISTING ELECTRICAL INSTALLATION

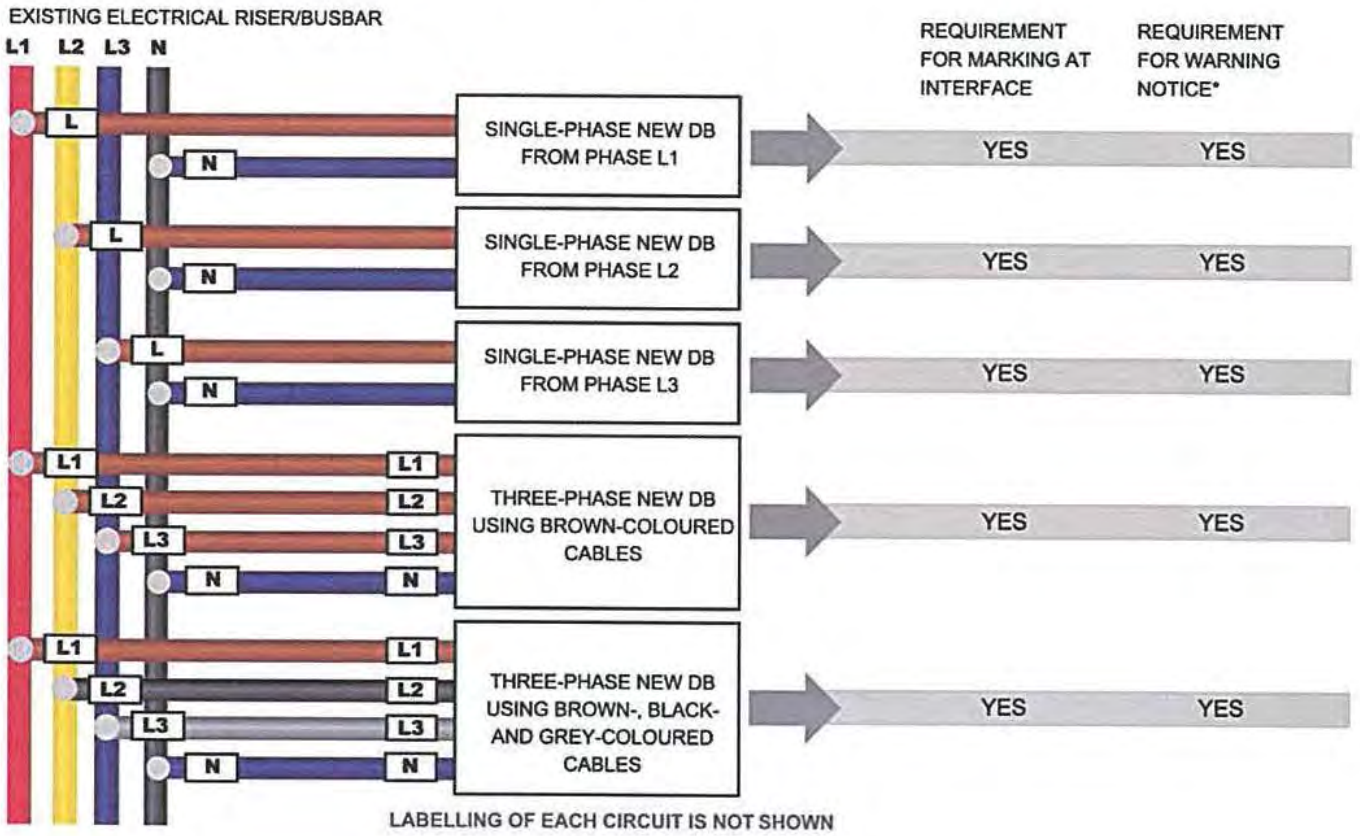

EXAMPLE 2 COLOUR MARKING OF SINGLE-CORE PVC-SHEATHED CABLE IN EXISTING ELECTRICAL INSTALLATION

Each single-core cable with pvc-insulated/pvc-sheathed or XLPE-insulated/pvc-sheathed shall be identified by appropriate colour marking (label and colour sleeve).

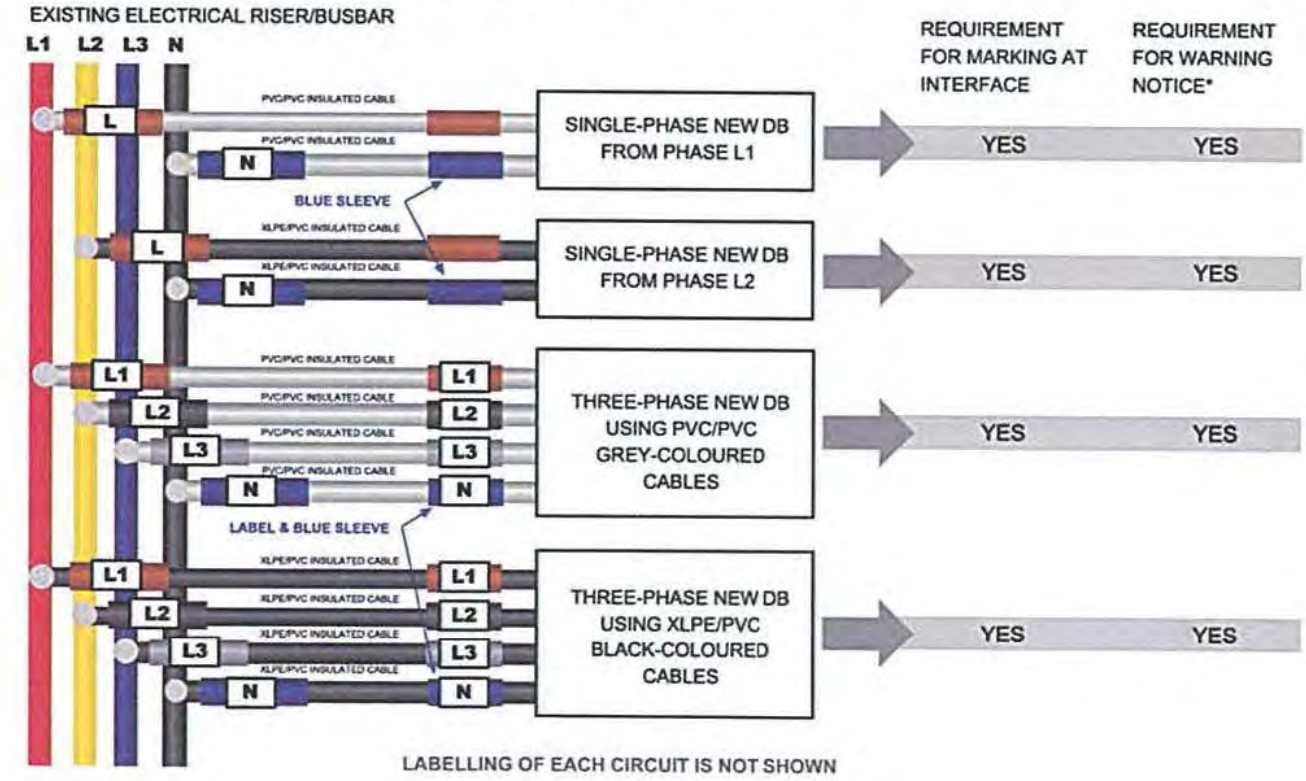

COPYRIGHT

EXAMPLE 3 TYPICAL COLOUR MARKING FOR NEW ELECTRICAL INSTALLATION

For a new electrical installation, brown-coloured cable may be used for the phase conductor of single-phase circuits. If brown-coloured cables are used for a three-phase circuit, each phase conductor and neutral conductor shall be identified by appropriate labelling.

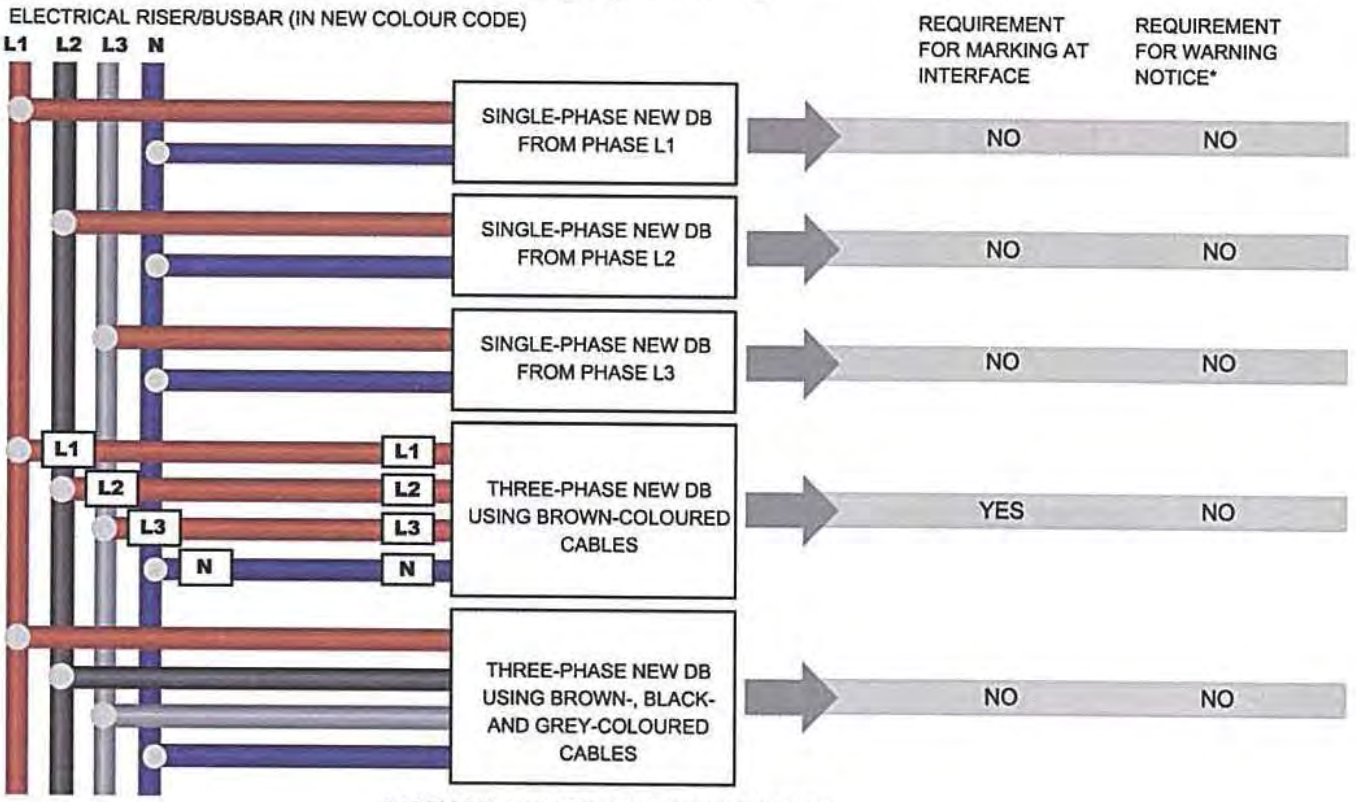

LABELLING OF EACH CIRCUIT IS NOT SHOWN

EXAMPLE 4 COLOUR MARKING OF SINGLE-CORE PVC-SHEATHED CABLE IN NEW ELECTRICAL INSTALLATION

Each single-core cable with pvc-insulated/pvc-sheathed or XLPE-insulated/pvc-sheathed shall be identified by appropriate colour marking (label and colour sleeve).

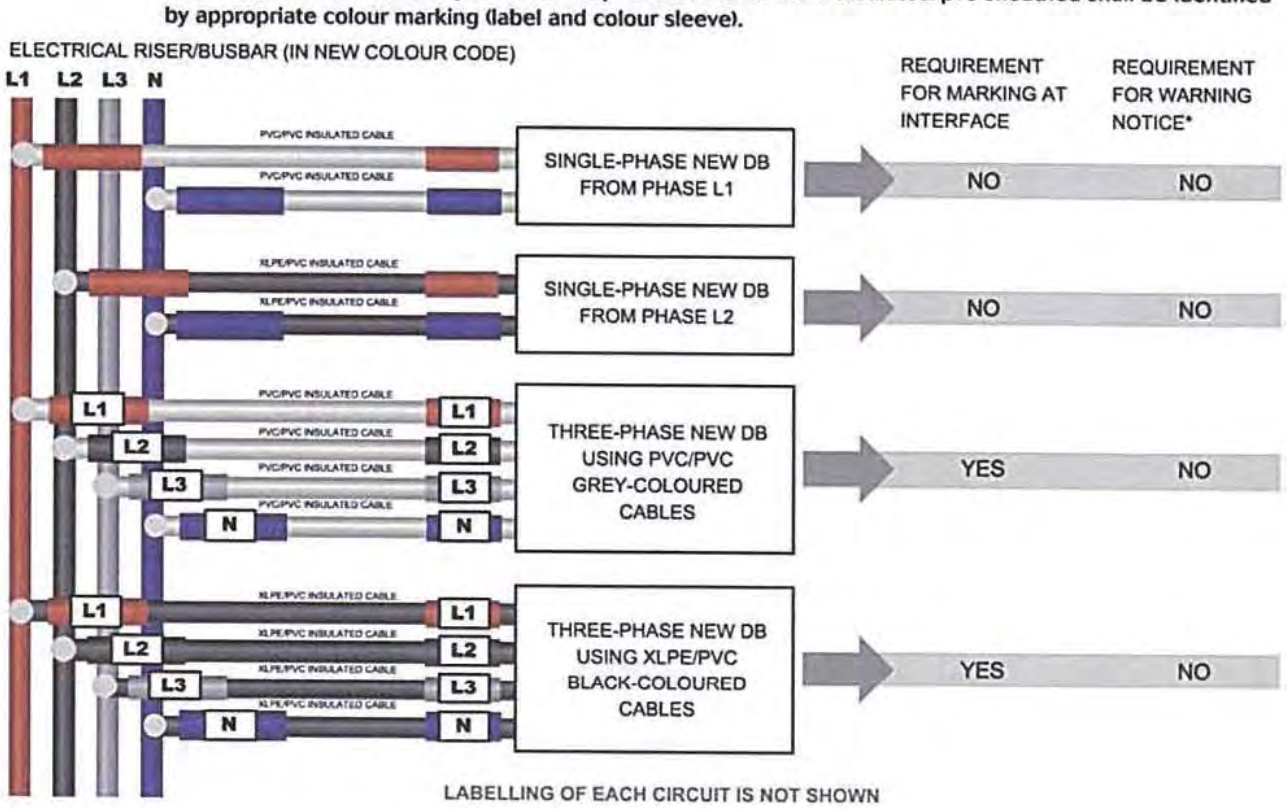

LABELLING OF EACH CIRCUIT IS NOT SHOWN

COPYRIGHT

EXAMPLE 5 SWITCHBOARD WITH INCOMING AND OUTGOING INDICATORS

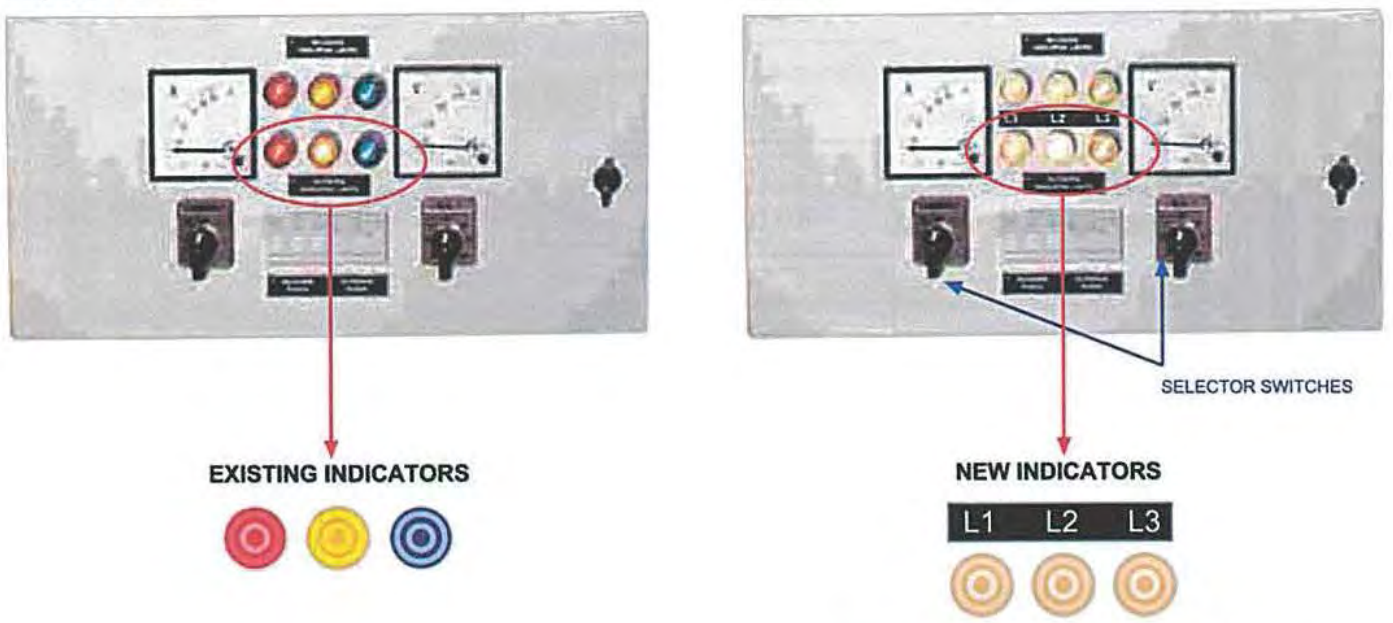

INDICATORS AND SELECTOR SWITCHES SHALL BE LABELLED USING L1, L2 AND L3 INSTEAD OF R, Y AND B.

EXAMPLE 6 TYPICAL SINGLE-PHASE DISTRIBUTION BOARD WITH CABLES IN NEW COLOUR CODE

No warning notice (see Figure 1 on page 10) is required for this distribution board.

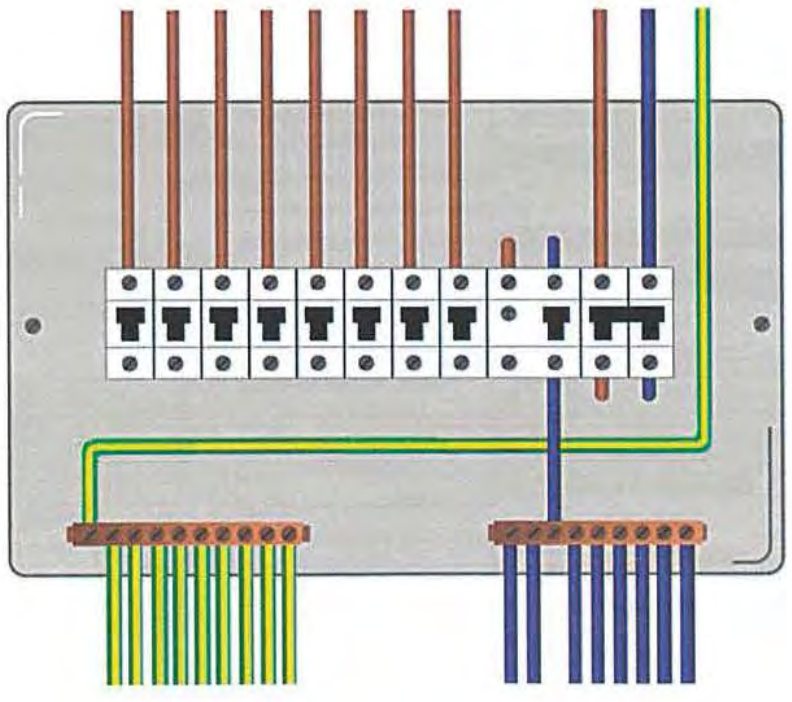

LABELLING OF EACH CIRCUIT IS NOT SHOWN

COPYRIGHT

EXAMPLE 7 TYPICAL THREE-PHASE DISTRIBUTION BOARD WITH CABLES IN NEW COLOUR CODE

No warning notice (see Figure 1 on page 10) is required for this distribution board.

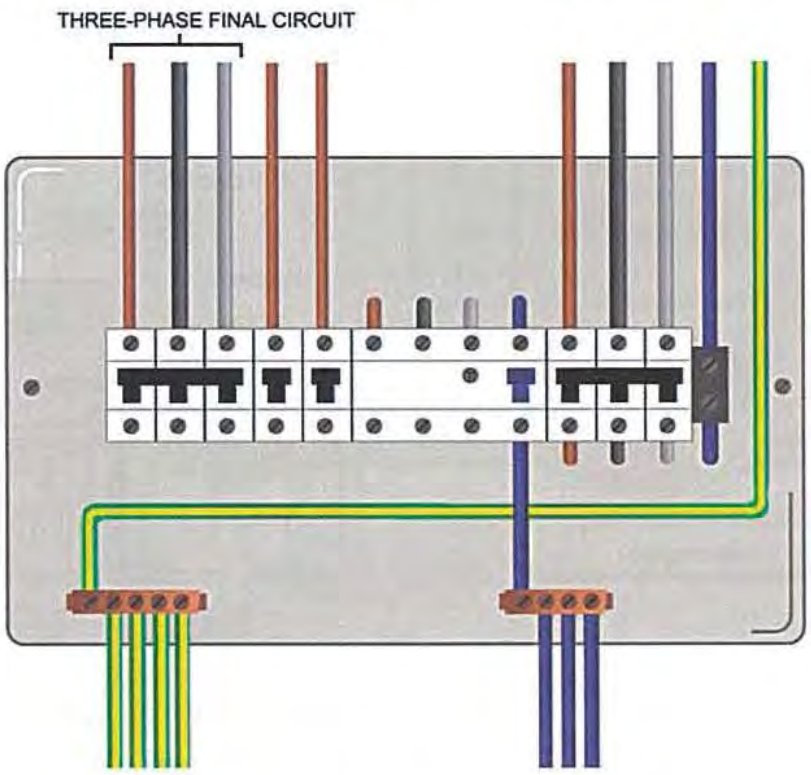

EXAMPLE 8 EXTENSIONS TO AN EXISTING SINGLE-PHASE ELECTRICAL INSTALLATION WHERE RED-COLOURED CABLES WERE USED FOR PHASE CONDUCTORS

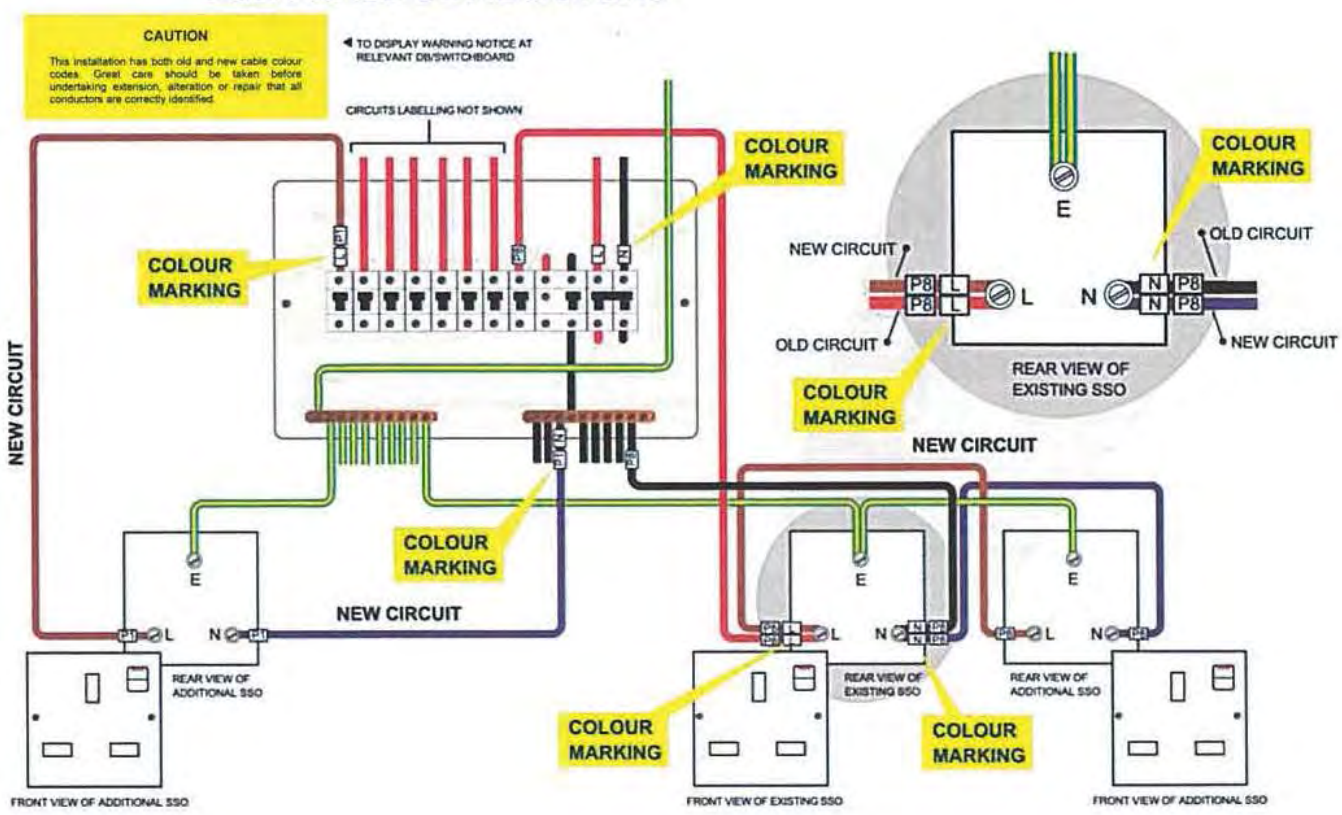

COPYRIGHT

EXAMPLE 9 EXTENSIONS TO AN EXISTING SINGLE-PHASE ELECTRICAL INSTALLATION WHERE YELLOW-COLOURED CABLES WERE USED FOR PHASE CONDUCTORS

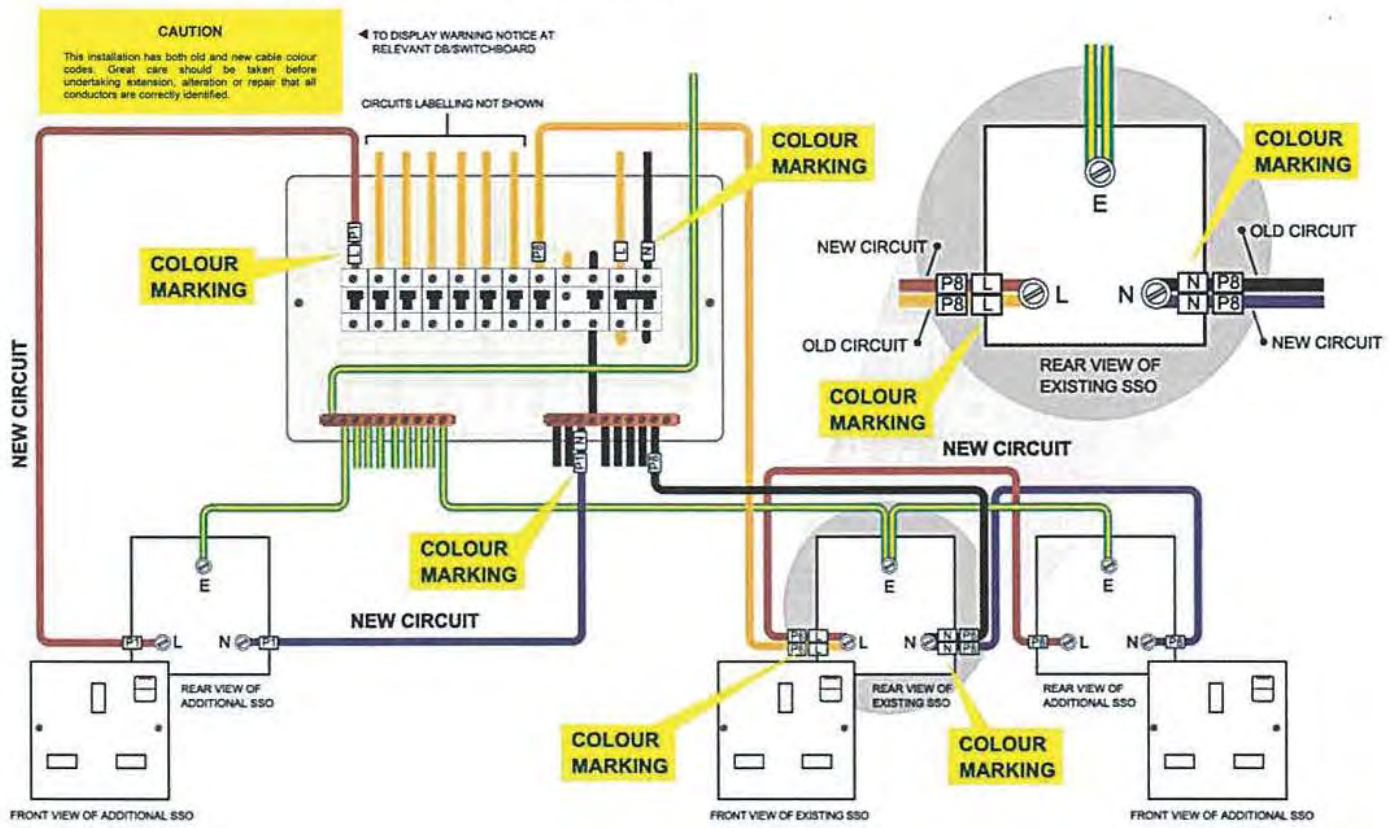

EXAMPLE 10 EXTENSIONS TO AN EXISTING SINGLE-PHASE ELECTRICAL INSTALLATION WHERE BLUE-COLOURED CABLES WERE USED FOR PHASE CONDUCTORS

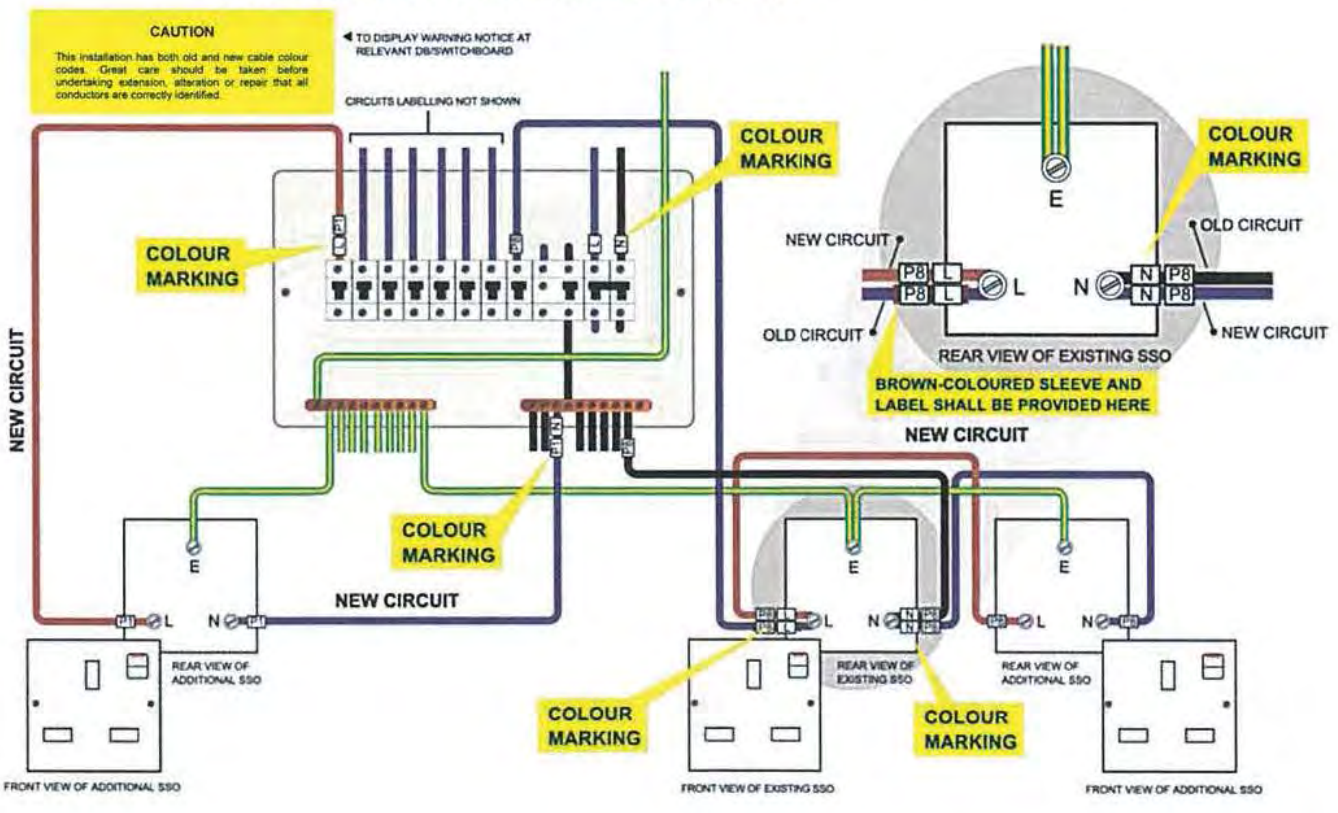

COPYRIGHT

EXAMPLE 11 EXTENSIONS OF TWO NEW THREE-PHASE CIRCUITS TO AN EXISTING THREE-PHASE ELECTRICAL INSTALLATION

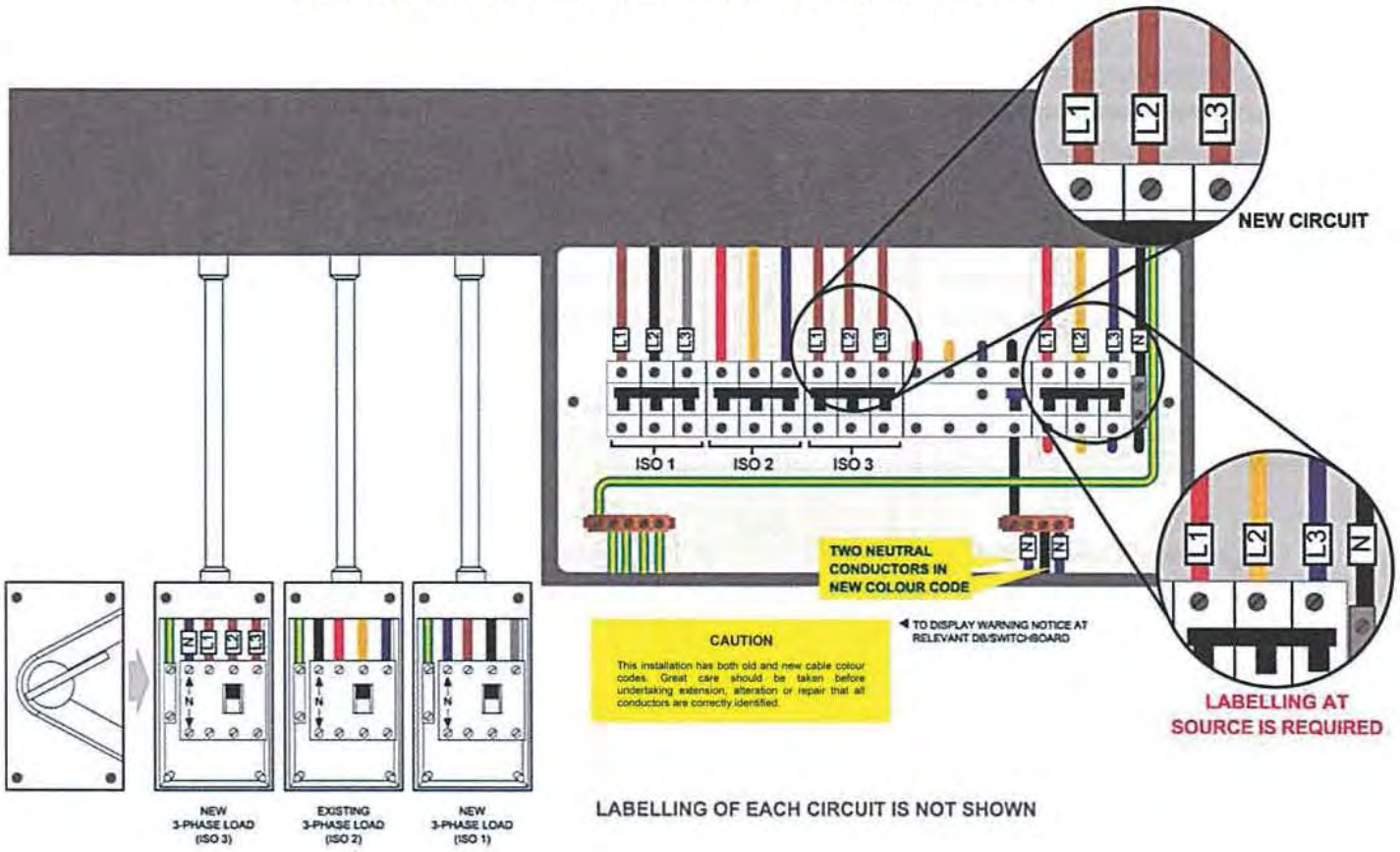

LABELLING OF EACH CIRCUIT IS NOT SHOWN

EXAMPLE 12 CIRCUITS LABELLING OF A TYPICAL DISTRIBUTION BOARD

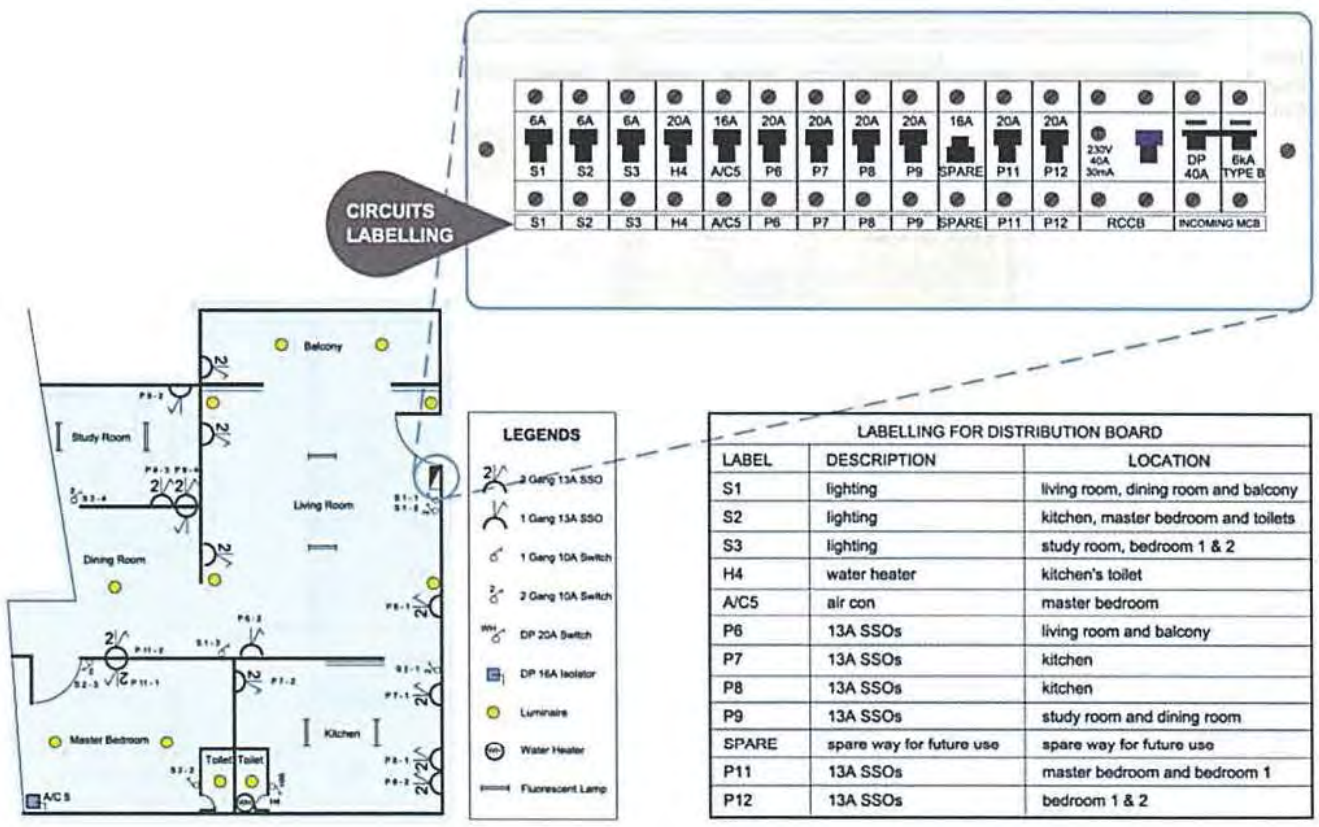

LABELLING FOR DISTRIBUTION BOARD		
LABEL	DESCRIPTION	LOCATION
S1	lighting	living room, dining room and balcony
S2	lighting	kitchen, master bedroom and toilets
S3	lighting	study room, bedroom 1 & 2
H4	water heater	kitchen's toilet
A/C5	air con	master bedroom
P6	13A SSOs	living room and balcony
P7	13A SSOs	kitchen
P8	13A SSOs	kitchen
P9	13A SSOs	study room and dining room
SPARE	spare way for future use	spare way for future use
P11	13A SSOs	master bedroom and bedroom 1
P12	13A SSOs	bedroom 1 & 2

COPYRIGHT

EXAMPLE 13 ADDING A NEW LIGHTING POINT TO AN EXISTING CIRCUIT USING RED-COLOURED CABLE FOR PHASE CONDUCTOR

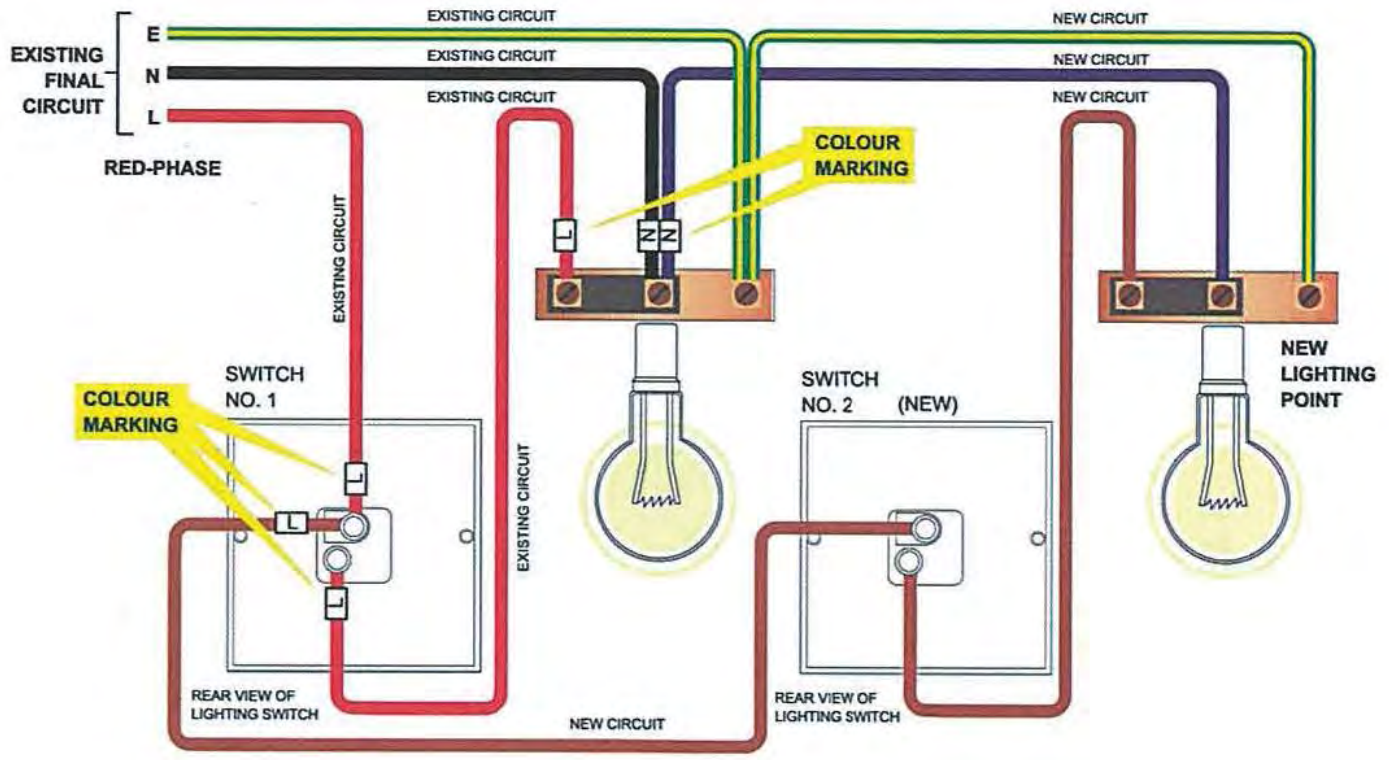

LABELLING OF EACH CIRCUIT IS NOT SHOWN

EXAMPLE 14 ADDING A NEW LIGHTING POINT TO AN EXISTING CIRCUIT USING BLUE-COLOURED CABLE FOR PHASE CONDUCTOR

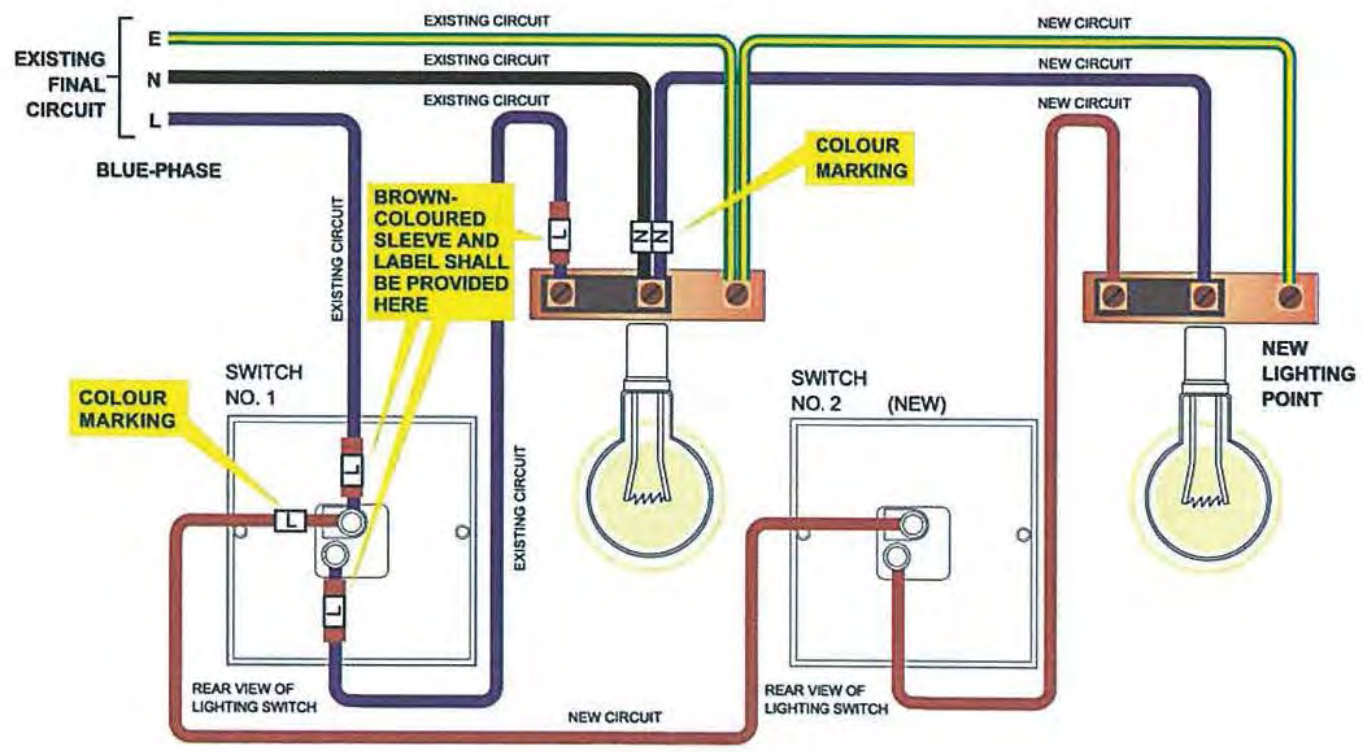

LABELLING OF EACH CIRCUIT IS NOT SHOWN

COPYRIGHT

EXAMPLE 15.1 REPLACING A DAMAGED SINGLE-CORE NEUTRAL CABLE OF AN EXISTING THREE-PHASE CIRCUIT (AFTER TRANSITION PERIOD)

If there is a need to replace the damaged black-coloured (neutral) cable, this may be done by:

Method 1 **Replacing the complete circuit with brown-, black- and grey-coloured cables for phase conductors and blue-coloured cable for neutral conductor; or**

Method 2 **Replacing the black-coloured (neutral) cable by a blue-coloured cable with labels bearing the letter "N" at regular intervals (not more than 1m apart), and the new blue-coloured neutral cable shall be installed together with the other phase cables of the same circuit in the same tray or trunking.**

Appropriate colour marking shall be provided as shown below.

Note that a warning notice shall be displayed at the relevant distribution board or switchboard.

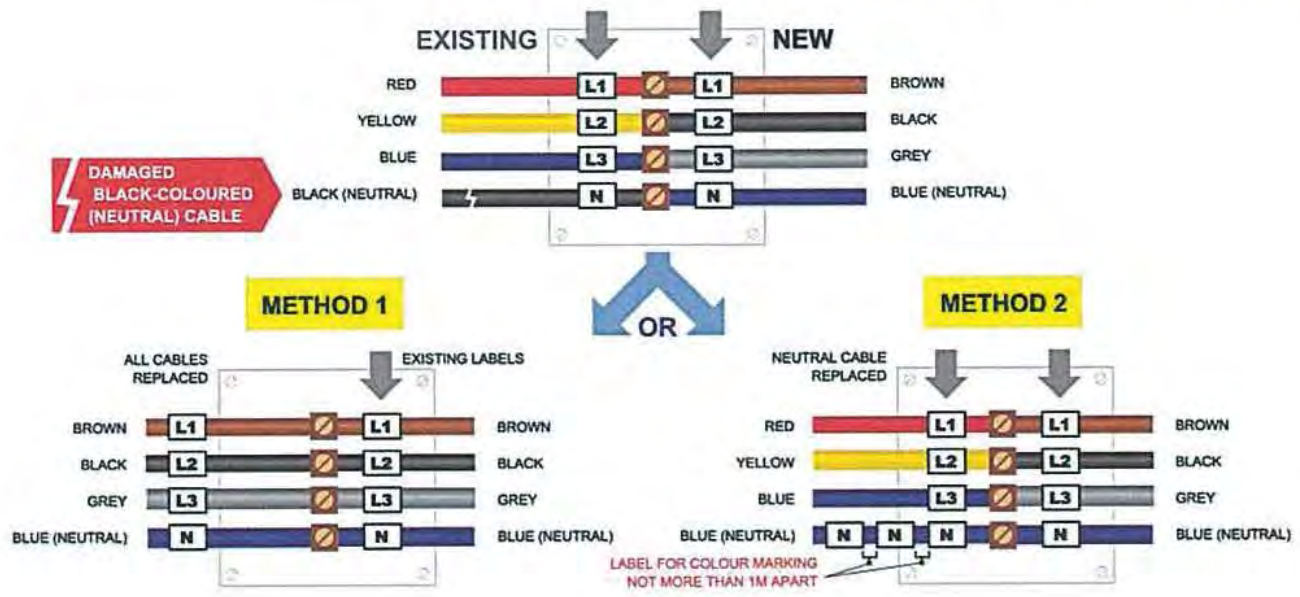

EXAMPLE 15.2 REPLACING A DAMAGED SINGLE-CORE NEUTRAL CABLE OF AN EXISTING THREE-PHASE CIRCUIT (AFTER TRANSITION PERIOD)

If there is a need to replace the damaged black-coloured (neutral) cable, this may be done by:

Method 1 **Replacing the complete circuit with brown-, black- and grey-coloured cables for phase conductors and blue-coloured cable for neutral conductor; or**

Method 2 **Replacing the black-coloured (neutral) cable by a blue-coloured cable with marking bearing the letter "N" at regular intervals (not more than 1m apart), and the new blue-coloured neutral cable shall be installed together with the other phase cables of the same circuit in the same tray or trunking.**

Appropriate colour marking shall be provided as shown below.

Note that a warning notice shall be displayed at the relevant distribution board or switchboard.



COPYRIGHT

EXAMPLE 16.1 REPLACING A DAMAGED YELLOW-COLOURED SINGLE-CORE CABLE OF AN EXISTING THREE-PHASE CIRCUIT (AFTER TRANSITION PERIOD)

If there is a need to replace the damaged yellow-coloured cable, this may be done by:

Method 1 **Replacing the complete circuit with brown-, black- and grey-coloured cables for phase conductors and blue-coloured cable for neutral conductor; or**

Method 2 **Replacing the yellow-coloured cable by a brown-coloured cable, and the new brown-coloured cable shall be installed together with the other phase cables of the same circuit in the same tray or trunking.**

Appropriate colour marking shall be provided as shown below.

Note that a warning notice shall be displayed at the relevant distribution board or switchboard.

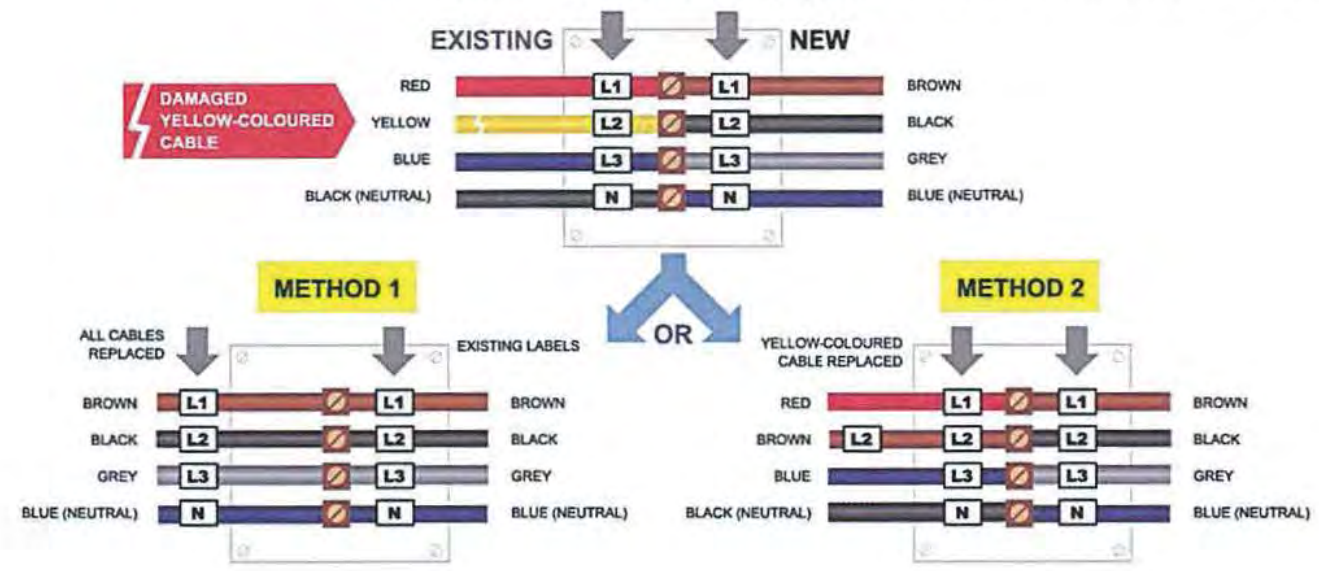

EXAMPLE 16.2 REPLACING A DAMAGED YELLOW-COLOURED SINGLE-CORE CABLE OF AN EXISTING THREE-PHASE CIRCUIT (AFTER TRANSITION PERIOD)

If there is a need to replace the damaged yellow-coloured cable, this may be done by:

Method 1 **Replacing the complete circuit with brown-, black- and grey-coloured cables for phase conductors and blue-coloured cable for neutral conductor; or**

Method 2 **Replacing the yellow-coloured cable by a brown-coloured cable, and the new brown-coloured cable shall be installed together with the other phase cables of the same circuit in the same tray or trunking.**

Appropriate colour marking shall be provided as shown below.

Note that a warning notice shall be displayed at the relevant distribution board or switchboard.

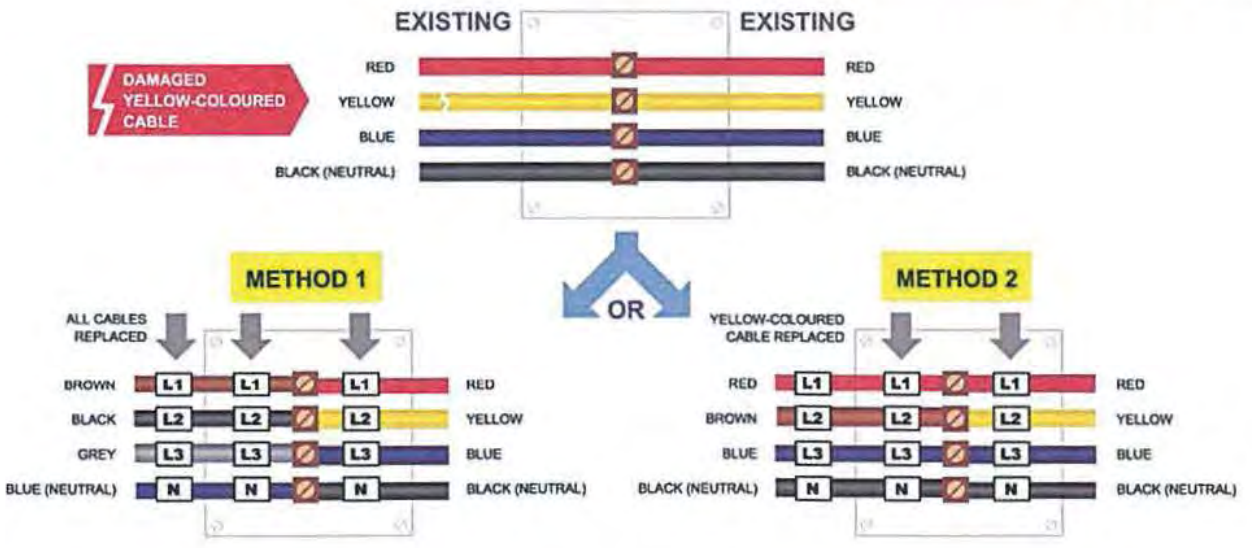

COPYRIGHT

EXAMPLE 17 BUSBAR COMPARTMENT OF A SWITCHBOARD

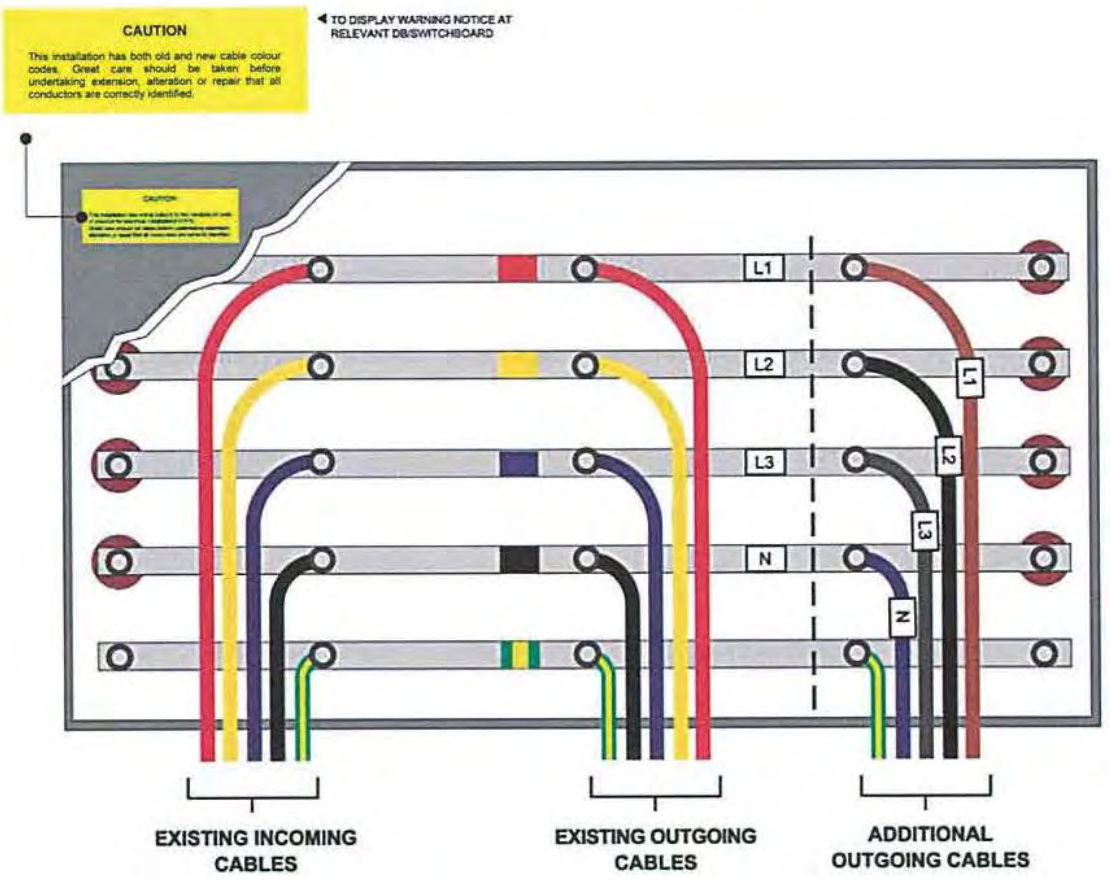

COPYRIGHT

Appendix 1(L)
(normative)

Standards to which reference is made in this Code

BS or BS EN or IEC or ISO or SS number	Title	References
BS 67 : 1987(2017)	Specification for ceiling roses	416.2.4L 559.5.1
BS 476-4 : 1970(2012)	Fire tests on building materials and structures. Non-combustibility test for materials	526.5
BS 476-12 : 1991(2017)	Fire tests on building materials and structures. Method of test for ignitability of products by direct flame impingement	553.3.1L
BS 559 : 2009	Specification for design and construction of signs for publicity, decorative and general purposes	110.1.3L 559.1
BS 646 : 1958(1991)+A2 : 2013	Specification for cartridge fuse-links (rated up to 5 amperes) for a.c. and d.c. service	533.1L 553.1.5L Table 55.1(L)
BS 3036 : 1958(2012)	Specification. Semi-enclosed electric fuses (rating up to 100 amperes and 240 volts to earth)	432.4L 533.1L 533.1.1.2L Appendix 3 Appendix 4(L) Table 41.2 Table 41.4 Table 4C1 Table 4C2 Table 4D1A Table 4D2A Table 4D3A Table 4D4A Table 4E1A Table 4E2A Table 4E3A Table 4E4A Table 4F1A Table 4F2A Table 4H1A Table 4H2A Table 4K1A Table 4K2A Table 4K3A Table 4K4A Table 4L1A Table 4L2A Table 4L3A Table 4L4A Figure 3A2(a) Figure 3A2(b)
BS 3858 : 1992(2014)	Specification for binding and identification sleeves for use on electric cables and wires	514.3.2
BS 4177 : 1992(2015)	Specification for cooker control units	Table 53.4L
BS 4444 : 1989(2017)	Guide to electrical earth monitoring and protective conductor proving	543.3.4 543.7.1.202L 543.7.1.203L
BS 4573 : 1970(2012)+A5 : 2016	Specification for 2-pin reversible plugs and shaver socket-outlets	553.1.5L
BS 4662 : 2006(2014)+A1 : 2009	Boxes for flush mounting of electrical accessories. Requirements, test methods and dimensions	559.5.1

COPYRIGHT

BS or BS EN or IEC or ISO or SS number	Title	References
BS 5467 : 2016	Electric cables. Thermosetting insulated, armoured cables of rated voltages of 600/1000 V and 1900/3300 V for fixed installations. Specification	522.6.204L Table 4A1
BS 6004 : 2012	Electric cables. PVC insulated and PVC sheathed cables for voltages up to and including 300/500 V, for electric power and lighting	702.522.23 705.422.8L Table 4A1 Table 4D1A Table 4E1A Table 4E2A Table 4E3A Table 4E4A Table 4F1A Table 4F2A Table 4L1A Table 4L2A Table 4L3A Table 4L4A
BS 6007 : 2006	Electric cables. Single core unshealthed heat resisting cables for voltages up to and including 450/750 V, for internal wiring	Table 4H2A Table 4H2B
BS 6207-1 : 1995	Mineral insulated cables with a rated voltage not exceeding 750 V. Cables	Table 4A1
BS 6231 : 2006	Electric cables. Single core PVC insulated flexible cables of rated voltage 600/1000 V for switchgear and controlgear wiring	Table 4A1 Table 4D1A
BS 6346 : 1997	Electric cables. PVC insulated, armoured cables for voltages of 600/1000 V and 1900/3300 V	Table 4A1 Table 4E1A Table 4E2A Table 4E3A Table 4E4A Table 4F1A Table 4F2A Table 4L1A Table 4L2A Table4L3A Table 4L4A
BS 6701 : 2016	Telecommunications equipment and telecommunications cabling. Specification for installation, operation and maintenance	110.1.3L 528.2
BS 6724 : 2016	Electric cables. Thermosetting insulated, armoured cables of rated voltages of 600/1000 V and 1900/3300 V for fixed installations, having low emission of smoke and corrosive gases when affected by fire. Specification.	522.6.204L Table 4A1
BS 6883 : 1999	Elastomer insulated cables for fixed wiring in ships and on mobile and fixed offshore units. Requirements and test methods	Table 4A1
BS 6891 : 2015	Specification for the installation and maintenance of low pressure gas installation pipework of up to 35 mm (R1¼) on premises	528.3.4
BS 6972 : 1988(2012)	Specification for general requirements for luminaire supporting couplers for domestic, light industrial and commercial use	559.5.1 559.5.4 Table 53.4L
BS 6991 : 1990(2012)	Specification for 6/10 A, two-pole weather-resistant couplers for household, commercial and light industrial equipment	553.2.1
BS 7001 : 1998(2012)	Specification for interchangeability and safety of a standardised luminaire supporting coupler	559.5.1 559.5.4
BS 7211 : 2012	Electric cables. Thermosetting insulated and thermoplastic shealthed cables for voltages up to and including 450/750 V for electric power and lighting and having low emission of smoke and corrosive gases when affected by fire	Table 4A1 Table 4E1A

COPYRIGHT

BS or BS EN or IEC or ISO or SS number	Title	References
BS 7629-1 : 2015	Electric cables. Specification for 300/500 V fire resistant, screened, fixed installation cables having low emission of smoke and corrosive gases when affected by fire. Multicore cables	Table 4A1 Table 4D2A
BS 7671 : 2008+A3 : 2015	Requirements for Electrical Installations. IET Wiring Regulations	National Foreword Notes on the Plan Part 2 A7.1
BS 7846 : 2015	Electric cables. Thermosetting insulated, armoured, fire-resistant cables of rated voltage 600/1000 V for fixed installations, having low emission of smoke and corrosive gases when affected by fire. Specification	522.6.204L
BS 7909 : 2011(2016)	Code of practice for temporary electrical systems for entertainment and related purposes	110.1.3L
BS 8436 : 2011(2016)	Electric cables. Specification for 300/500 V screened electric cables having low emission of smoke and corrosive gases when affected by fire, for use in walls, partitions and building voids. Multicore cables	522.6.204L
BS 8450 : 2006(2012)	Code of practice for installation of electrical and electronic equipment in ships	110.2L
BS 8488 : 2009+A1 : 2010	Prefabricated wiring systems intended for permanent connection in fixed installations. Specification	521.201
BS 8491 : 2008	Method for assessment of fire integrity of large diameter power cables for use as components for smoke and heat control systems and certain other active fire safety systems	560.8.1L
BS 8519 : 2010	Selection and installation of fire-resistant power and control cable systems for life safety and fire fighting applications. Code of practice	110.1.3L
BS EN 13636 : 2004	Cathodic protection of buried metallic tanks and related piping	712.312.2L
BS EN 15112 : 2006(2011)	External cathodic protection of well casing	712.312.2L
BS EN 50200 : 2015	Method of test for resistance to fire of unprotected small cables for use in emergency circuits	560.8.1L
BS EN 50525 series	Electric cables. Low voltage energy cables of rated voltages up to and including 450/750 V (U_0/U).	559.5.3.2 702.522.23 705.422.8L Table 4A1
IEC 60050	International Electrotechnical Vocabulary	Part 2
IEC 60073 : 2002	Basic and safety principles for man-machine interface, marking and identification - Coding principles for indicators and actuators	514.1.1
IEC 60079 series	Explosive atmospheres	Appendix 5(L)
IEC 60079-10 : 2015	Explosive atmospheres - Part 10: Classification of areas	532.1L
IEC 60079-14 : 2013	Explosive atmospheres - Part 14: Electrcial installations design, selection and erection	422.3L 532.1L 560.1
IEC 60079-17 : 2013	Explosive atmospheres - Part 17: Electrical installations inspection and maintenance	612.1
IEC 60146-2 : 1999	Semiconductor converters - Part 2: Self-commutated semiconductor converters including direct d.c. converters	414.2L
IEC 60204-1 : 2006	Safety of machinery - Electrical equipment of machines - Part 1: General requirements	537.3.1 537.4.1 537.5.4
IEC 60238 : 2016+A1 : 2017	Edison screw lampholders	416.2.4L 559.5.1.206 612.6L Table 55.2(L)

COPYRIGHT

BS or BS EN or IEC or ISO or SS number	Title	References
IEC 60269 series	Low-voltage fuses	432.4L 433.1.204L 533.1L Table 53.4L Appendix 8(L)
IEC 60269-2 : 2013+A1 : 2016	Low-voltage fuses - Part 2: Supplementary requirements for fuses for use by authorised persons (fuses mainly for industrial application) - Examples of standardised systems of fuses A to K	Symbols used in the Code 433.1.201 Appendix 3 Table 41.2 Table 41.4 Table 41.6L Figure 3A3(a) Figure 3A3(b)
IEC 60269-3 : 2010+A1 : 2013	Low-voltage fuses - Part 3: Supplementary requirements for fuses for use by unskilled persons (fuses mainly for household or similar application) - Examples of standardised systems of fuses A to F	433.1.201 533.1.1.2L 6.1 Appendix 3 Appendix 4(L) Table 41.2 Table 41.4 Figure 3A1
IEC 60287 series	Electric cables - Calculation of the current rating	523.3 Appendix 10(L)
IEC 60287-1-1 : 2006 + A1 : 2014	Electric cables - Calculation of the current rating - Part 1-1: Current rating equations (100% load factor) and calculation of losses - General	Appendix 4(L)
IEC 60309-1 : 1999+A1 : 2005+A2 : 2012	Plugs, socket-outlets and couplers for industrial purposes - Part 1: General requirements	705.553.1
IEC 60309-2 : 1999+A1 : 2005+A2 : 2012	Plugs, socket-outlets and couplers for industrial purposes - Part 2: Dimensional interchangeability requirements for pin and contact-tube accessories	543.7.1.201L 543.7.1.202L 553.1.5L 553.2.1 559.5.1 702.53.3L 705.553.1 Table 55.1(L)
IEC 60320-1 : 2015	Appliance couplers for household and similar general purposes - Part 1: General requirements	553.2.1
IEC 60332-1-2 : 2004+A1 : 2015	Tests on electric and optical fibre cables under fire conditions - Part 1-2: Test for vertical flame propagation for a single insulated wire or cable - procedure for 1 kW pre-mixed flame	422.3.4L 422.4.203L 527.1.3 527.1.4 560.8.1L
IEC 60332-3 series	Tests on electric and optical fibre cables under fire conditions	422.2.1L 422.3.4L 527.1.3
IEC 60335-2-41 : 2012	Household and similar electrical appliances - Safety - Part 2-41: Particular requirements for pumps	702.55.3
IEC 60335-2-53 : 2011+A1 : 2017	Household and similar electrical appliances - Safety - Part 2-53: Particular requirements for sauna heating appliances and infrared cabins	703.55
IEC 60335-2-71 : 2002+A1 : 2007+A2: 2012	Household and similar electrical appliances - Safety - Part 2-71: Particular requirements for electrical heating appliances for breeding and rearing animals	705.422.6
IEC 60335-2-84 : 2002+A1 : 2008+A2: 2013	Household and similar electrical appliances - Safety - Part 2-84: Particular requirements for toilet appliances	701.55.2L
IEC 60335-2-96 : 2002+A1 : 2003+A2: 2008	Household and similar electrical appliances - Safety - Part 2-96: Particular requirements for flexible sheet heating elements for room heating	110.1.3L
IEC 60364-4-41 : 2005+A1 : 2017	Low voltage electrical installations - Part 4-41: Protection for safety - Protection against electric shock	Appendix 5(L)

COPYRIGHT

BS or BS EN or IEC or ISO or SS number	Title	References
IEC 60364-4-42 : 2010	Low voltage electrical installations - Part 4-42: Protection for safety - Protection against thermal effects	Appendix 5(L)
IEC 60364-5-51 : 2005	Electrical installations of buildings - Part 5-51: Selection and erection of electrical equipment - Common rules	Appendix 5(L)
IEC 60364-5-52 : 2009	Low voltage electrical installations - Part 5-52: Selection and erection of electrical equipment - Wiring systems	Appendix 5(L)
IEC 60417 : 2002	Graphical symbols for use on equipment	412.2.1.1 Table 55.3
IEC 60447 : 2004	Basic and safety principles for man-machine interface, marking and identification - Actuating principles	514.1.1
IEC 60502-1 : 2004+A1 : 2009	Power cables with extruded insulation and their accessories for rated voltages from 1 KV (U_m = 1.2 kV) up to 30 kV (U_m = 36 kV) - Part 1: Cables for rated voltages of 1 kV (U_m = 1.2 kV) and 3 kV (U_m = 3.6 kV)	Table 52.1L
IEC 60529 : 1989+A1 : 1999+A2 : 2013	Degrees of protection provided by enclosures (IP Code)	527.2.3 702.512.2
IEC 60570 : 2003	Electrical supply track systems for luminaires	527.1.5 559.3.4 715.521.1
IEC 60598 series	Luminaires	Tables 55.3
IEC 60598-1 : 2014+A1: 2017	Luminaires - Part 1: General requirements and tests	Table 55.3
IEC 60598-2-13 : 2006+A1 : 2011+A2 : 2016	Luminaires - Part 2-13: Particular requirements – Ground recessed luminaires	714.512.3
IEC 60598-2-18 : 1993	Luminaires - Part 2-18: Particular requirements – Luminaires for swimming pools and similar applications	702.55.2 702.55.3
IEC 60598-2-23 : 1996+A1 : 2000	Luminaires - Part 2-23: Particular requirements - Extra low voltage lighting systems for filament lamps	715.422.107.1L 715.521.1
IEC 60598-2-24 : 2013	Luminaires - Part 2-24: Particular requirements – Luminaires with limited surface temperatures	422.3.2L 422.3.8 Table 55.3
IEC 60601 series	Medical electrical equipment - General requirements for safety	A.2 A.512.2.1 Figure A.1
IEC 60617 : 2012	Graphical symbols fo diagrams	514.9.1L Table 53.4L
IEC 60623 : 2017	Secondary cells and batteries containing alkaline or other non-acid electrolytes - Vented nickel-cadmium prismatic rechargeable single cells	560.6.10L 560.6.11L
IEC 60664-1 : 2007	Insulation coordination for equipment within low-voltage systems - Part 1: Principles, requirements and tests	534.1L 534.2.3.1.1L 537.2.2.1
IEC 60669-1 : 2017	Switches for household and similar fixed-electrical installations - Part 1: General requirements	416.2.4L Table 53.4L
IEC 60669-2-1 : 2002+A1 : 2008+A2 : 2015	Switches for household and similar fixed electrical installations - Part 2-1: Particular requirements - Electronic switches	Table 53.4L
IEC 60669-2-2 : 2006	Switches for household and similar fixed electrical installations - Part 2-2: Particular requirements - Electromagnetic remote-control switches (RCS)	Table 53.4L
IEC 60669-2-3 : 2006	Switches for household and similar fixed electrical installations - Part 2-3: Particular requirements - Time-delay switches (TDS)	Table 53.4L
IEC 60669-2-4 : 2004	Switches for household and similar fixed electrical installations - Part 2-4: Particular requirements - Isolating switches	Table 53.4L
IEC 60669-2-5 : 2013	Switches for household and similar fixed installations - Part 2-5: Particular requirements - Switches and related accessories for use in home and building electronic systems (HBEs)	Table 53.4L

COPYRIGHT

BS or BS EN or IEC or ISO or SS number	Title	References
IEC 60670-1 : 2015	Boxes and enclosures for electrical accessories for household and similar fixed electrical installations - Part 1: General requirements	422.5
IEC 60670-22 : 2003+A1 : 2015	Boxes and enclosures for electrical accessories for household and similar fixed electrical installations - Part 22: Particular requirements for connecting boxes and enclosures	521.8.3 Figure 15A
IEC 60684 series	Flexible insulating sleeving	543.3.201L
IEC 60702-1 : 2002+A1 : 2015	Mineral insulated cables and their terminations with a rated voltage not exceeding 750 V - Part 1: Cables	433.1.204L 522.6.204L 560.8.1L Table 52.1L
IEC 60702-2 : 2002+A1 : 2015	Mineral insulated cables and their terminations with a rated voltage not exceeding 750 V - Part 2: Terminations	560.8.1L
IEC 60721-3-3 : 1994+A1 : 1995 +A2 : 1996	Classification of environmental conditions - Part 3: Classification of groups of environmental parameters and their severities - Section 3: Stationary use at weatherprotected locations	Appendix 5(L)
IEC 60721-3-4 : 1995	Classification of environmental conditions - Part 3: Classification of groups of environmental parameters and their severities - Section 4: Stationary use at non weatherprotected locations	Appendix 5(L)
IEC 60898-1 : 2015	Electrical accessories - Circuit-breakers for overcurrent protection for household and similar installations - Part 1: Circuit-breakers for a.c. operation	432.4L 433.1.201 433.1.204L 434.5.2L 533.1L Appendix 3 Appendix 4(L) Appendix 8(L) Table 41.3 Table 41.6 Table 53.4L Figure 3A4 Figure 3A5 Figure 3A6
IEC 60898-2 : 2016	Electrical accessories - Circuit-breakers for overcurrent protection for household and similar installations - Part 2: Circuit-breakers for a.c. and d.c.operation	434.5.2L 533.1L
IEC 60904-3 : 2016	Photovoltaic devices - Part 3: Measurement principles for terrestrial photovoltaic (PV) solar devices with reference spectral irradiance data	Part 2
IEC 60947-2 : 2016	Low-voltage switchgear and controlgear - Part 2: Circuit-breakers	432.4L 433.1.201 433.1.204L 533.1L Appendix 8(L) Table 53.4L
IEC 60947-3 : 2008+A1 : 2012+A2 : 2015	Low-voltage switchgear and controlgear - Part 3:Switches, disconnectors, switch-disconnectors and fuse-combination units	533.1L 712.537.2.2.5L Table 53.4L
IEC 60947-4-1 : 2009+A1 : 2012	Low-voltage switchgear and controlgear - Part 4-1: Contactors and motor starters – Electromechanical contactors and motor starters	435.2 533.1L 536.5.2 Table 53.4L
IEC 60947-5-1 : 2016	Low-voltage switchgear and controlgear - Part 5-1: Control circuit devices and switching elements - Electromechanical control circuit devices	Table 53.4L
IEC 60947-6-1 : 2005+A1 : 2013	Low-voltage switchgear and controlgear - Part 6-1: Multiple function equipment - Transfer switching equipment	533.1L Table 53.4L A.537.1

COPYRIGHT

BS or BS EN or IEC or ISO or SS number	Title	References
IEC 60947-6-2 : 2002+A1 : 2007	Low-voltage switchgear and controlgear - Part 6-2: Multiple function equipment - Control and protective switching devices (or equipment) (CPS)	Table 53.4L
IEC 60949 : 1988	Calculation of thermally permissible short-circuit currents, taking into account non-adiabatic heating effects	Table 43.1
IEC 60974-9 : 2010	Arc welding equipment - Part 9: Installation and use	706.1L
IEC 60998-2-1 : 2002	Connecting devices for low-voltage circuits for household and similar purposes - Part 2-1: Particular requirements for connecting devices as separate entities with screw-type clamping units	715.521.107
IEC 60998-2-2 : 2002	Connecting devices for low-voltage circuits for household and similar purposes - Part 2-2: Particular requirements for connecting devices as separate entities with screwless-type clamping units	715.521.107
IEC 61000 series	Electromagnetic compatibility (EMC) - Testing and measurement techniques	131.6L 332.2L 515.2 Appendix 4(L) Appendix 5(L)
IEC 61034-2 : 2005+A1 : 2013	Measurement of smoke density of cables burning under defined conditions - Part 2: Test procedure and requirements	422.2.1L
IEC 61048 : 2006+A1 : 2015	Auxiliaries for lamps - Capacitors for use in tubular fluorescent and other discharge lamp circuits - General and safety requirements	559.7
IEC 61084 series	Cable trunking systems and cable ducting systems for electrical installations	412.2.4.1 422.2.1L 422.3.4L 521.6
IEC 61084-1 : 2017	Cable trunking systems and cable ducting systems for electrical installations - Part 1: General requirements	422.4.204L
IEC 61084-2-1 : 2017	Cable trunking systems and cable ducting systems for electrical installations - Part 2-1: Particular requirements - Cable trunking systems and cable ducting systems intended for mounting on walls and ceilings	522.6.204L 705.522.16
IEC 61095 : 2009	Electromechanical contactors for household and similar purposes	Table 53.4L
IEC 61140 : 2016	Protection against electric shock - Common aspects for installation and equipment	410L 412.2.4.1 414.1.1 Part 2
IEC 61184 : 2017	Bayonet lampholders	416.2.4L 559.5.1.205 Table 55.2(L)
IEC 61215-1 : 2016	Terrestrial photovoltaic (PV) modules - Design qualification and type approval - Part 1: Test requirements	712.511.1L
IEC 61347-1 : 2015	Lamp controlgear - Part 1: General and safety requirements	Table 55.3
IEC 61347-2-2 : 2011	Lamp controlgear - Part 2-2: Particular requirements for d.c. or a.c. supplied electronic step-down convertors for filament lamps	715.414
IEC 61347-2-13 : 2014+A1 : 2016	Lamp controlgear - Part 2-13: Particular requirements for d.c. or a.c. supplied electronic controlgear for LED modules	715.414
IEC 61386-1 : 2008+A1 : 2017	Conduit systems for cable management - Part 1: General requirements	422.3.4L 422.4.204L
IEC 61386-21 : 2002	Conduit systems for cable management - Part 21: Particular requirements - Rigid conduit systems	522.6.204L 705.522.16

COPYRIGHT

BS or BS EN or IEC or ISO or SS number	Title	References
IEC 61386-24 : 2004	Conduit systems for cable management - Part 24: Particular requirements - Conduit systems buried underground	522.8.10
IEC 61439 series	Low-voltage switchgear and controlgear assemblies	412.2.1.1 422.5 577.1 Part 2 A.511.1
IEC 61439-1 : 2011	Low-voltage switchgear and controlgear assemblies - Part 1: General rules	712.511.1L
IEC 61439-2 : 2011	Low-voltage switchgear and controlgear assemblies - Part 2: Power switchgear and controlgear assemblies	Appendix 8(L)
IEC 61439-6 : 2012	Low-voltage switchgear and controlgear assemblies - Part 6: Busbar trunking systems (busways)	434.5.3L 521.4L 527.1.5 527.1.6 Appendix 8(L) Appendix 10(L)
IEC 61535 : 2009+A1 : 2012	Installation couplers intended for permanent connection in fixed installations	521.201 526.2L 553.2.1 559.5.1 559.5.4 Part 2
IEC 61537 : 2006	Cable management - Cable tray systems and cable ladder systems	422.2.1L 422.3.4L 521.6 527.1.5 527.1.6
IEC 61557 series	Electrical safety in low voltage distribution systems up to 1000 V a.c. and 1500 V d.c.	612.1
IEC 61557-2 : 2007	Electrical safety in low voltage distribution systems up to 1000 V a.c. and 1500 V d.c. - Equipment for testing, measuring or monitoring of protective measures - Part 2: Insulation resistance	Appendix 13
IEC 61557-6 : 2007	Electrical safety in low voltage distribution systems up to 1000 V a.c. and 1500 V d.c. - Equipment for testing, measuring or monitoring of protective measures - Part 6: Effectiveness of residual current devices (RCD) in TT, TN and IT systems	612.8.1 612.10 621.3
IEC 61557-8 : 2014	Electrical safety in low voltage distribution systems up to 1000 V a.c. and 1500 V d.c. - Equipment for testing, measuring or monitoring of protective measures - Part 8: Insulation monitoring devices for IT systems	557.3.4.3 A.411.6.3.1
IEC 61557-9 : 2014	Electrical safety in low voltage distribution systems up to 1000 V a.c. and 1500 V d.c. - Equipment for testing, measuring or monitoring of protective measures - Part 9: Equipment for insulation fault location in IT systems	557.5.3.1 A.411.6.3.3
IEC 61558-1 : 2005+A1 : 2009	Safety of power transformers, power supplies, reactors and similar products - Part 1: General requirements sand tests	411.8.4.1L
IEC 61558-2-5 : 2010	Safety of transformers, reactors, power supply units and combinations thereof - Part 2-5: Particular requirements and test for transformer for shavers, power supply units for shavers and shaver supply units	553.1.5L 701.512.2 701.512.3
IEC 61558-2-6 : 2009	Safety of transformers, reactors, power supply units and similar products for supply voltages up to 1100 V - Part 2-6: Particular requirements and tests for safety isolating transformers and power supply units incorporating safety isolating transformers	414.3L 715.414 Table 55.3

COPYRIGHT

BS or BS EN or IEC or ISO or SS number	Title	References
IEC 61558-2-15 : 2011	Safety of transformers, reactors, power supply units and combinations thereof - Part 2-15: Particular requirements and tests for isolating transformers for the supply of medical locations	A.512.1.1
IEC 61558-2-23 : 2010	Safety of transformers, reactors, power supply units and combinations thereof - Part 2-23: Particular requirements and tests for transformers and power supply units for construction sites	411.8.4.1L
IEC 61643-11 : 2011	Low-voltage surge protective devices - Part 11: Surge protective devices connected to low-voltage power systems - Requirements and tests methods	534.2.3.3 534.2.3.4.1 534.2.3.4.2 Table 16A
IEC 61643-21 : 2000+A1 : 2008+A2 : 2012	Low-voltage surge protective devices - Part 21: Surge protective devices connected to telecommunications and signalling networks - Performance requirements and testing methods	534.2.3.4.1
IEC 61730-1 : 2016	Photovoltaic (PV) module safety qualification - Part 1: Requirements for construction	712.511.1L
IEC 61995-1 : 2005	Devices for the connection of luminaires for household and similar purposes. General requirements	559.5.1 Table 53.4L
IEC 62040-1 : 2008+A1 : 2013	Uninterruptible power systems (UPS) - Part 1: General and safety requirements for UPS	560.6.12L
IEC 62040-3 : 2011	Uninterruptible power systems (UPS) - Part 3: Method of specifying the performance and test requirements	560.6.12l
IEC 62305-1 : 2010	Protection against lightning - Part 1: General principles	Appendix 5(L)
IEC 62305-2 : 2010	Protection against lightning - Part 2: Risk management	528.1 534.2.3.1.1L
IEC 62305-4 : 2010	Protection against lightning - Part 4: Electrical and electronic systems within structures	528.1 Table 16A
IEC 62353 : 2014	Medical electrical equipment - Recurrent test and test after repair of medical electrical equipment	A.6
IEC 62423 : 2009	Type F and type B residual current operated circuit-breakers with and without integral overcurrent protection for household and similar uses	712.411.3.2.1.2L A.411.3.2.1
IEC 62440 : 2008	Electric cables with a rated voltage not exceeding 450/750 V - Guide to use	521.9.1
ISO 8528-12 : 1997(2014)	Reciprocating internal combustion engine driven alternating current generating sets - Part 12: Emergency power supply for safety services	560.6.13L
SS 97 : 2016	Residual current operated circuit-breakers without integral overcurrent protection for household and similar uses (RCCBs) - General rules	411.4.9L 701.55.2L Annex A(L) Appendix 6(L) Table 41.5 Table 53.4L
SS 145-1 : 2010	Specification for 13 A plugs and socket-outlets - Part 1: Rewirable and non-rewirable 13 A fused plugs	Table 53.4L
SS 145-2 : 2018	Specification for 13 A plugs and socket-outlets - Part 2: 13 A switched and unswitched socket-outlets	559.5.1 705.512.2 Table 53.4L Figure 15A
SS 167 : 1977(2012)	General purpose fuse links for domestic and similar purposes (primarily for use in plugs)	533.1L 533.1.1.2L Table 41.2 Table 41.4 Table 53.4L Table 55.1(L)
SS 241 : 1996(2008)	General requirements for electrical accessories	521.4 526.3L 559.5.1 559.5.4 Table 53.4L

COPYRIGHT

BS or BS EN or IEC or ISO or SS number	Title	References
SS 299-1 : 1998(2013)	Fire resistant cables - Performance requirements for cables required to maintain circuit integrity under fire conditions	560.8.1L
SS 322 : 2015	Specification for earthing and bonding clamps	514.13.1L
SS 358 series	Polyvinyl chloride insulated cables of rated voltages up to and including 450/750 V	Appendix 4(L)
SS 403 : 2013	Specification for 13A fused connection units switched and unswitched	559.5.1 Table 53.4L Figure 15A
SS 472 : 1999(2012)	15A plugs and switched socket-outlets for domestic and simiar purposes	553.1.5L 559.5.1 705.512.2 705.553.1 Table 55.1(L)
SS 480 : 2016	Residual current operated circuit-breakers with integral overcurrent protection for household and similar uses (RCBOs) - General rules	411.4.9L 432.4L 433.1.201 433.1.204L 434.5.2L 533.1L Annex A(L) Table 41.3 Table 41.5 Table 41.6 Table 53.4L Figure 3A4 Figure 3A5 Figure 3A6
SS 535 : 2007	Code of practice for installation, operation, maintenance, performance and construction requirements of mains failure standby generating systems	313.2L
SS 546 : 2009	Code of practice for emergency voice communication systems in buildings	560.8.1L
SS 550 : 2009	Code of practice for installation, operation and maintenance of electric passenger and goods lifts	110.2L 528.3.5
SS 551 : 2009	Code of practice for earthing	411.3.1.2L 542.1.2.4L 542.2.3L 542.3.1 543.1.3
SS 555-1 : 2018	Code of practice for protection against lightning - Part 1: General principles	110.2L 131.6.2 411.3.1.2L 421.1.1L 541.3L
SS 555-2 : 2018	Code of practice for protection against lightning - Part 1: Risk management	110.2L 131.6.2 411.3.1.2L 421.1.1L 541.3L
SS 555-3 : 2018	Code of practice for protection against lightning - Part 3: Physical damage to structures and life hazard	110.2L 131.6.2 411.3.1.2L 421.1.1L 541.3L

COPYRIGHT

BS or BS EN or IEC or ISO or SS number	Title	References
SS 555-4 : 2018	Code of practice for protection against lightning - Part 4: Electrical and electronic systems within structures	110.2L 131.6.2 421.1.1L 411.3.1.2L 421.1.1L 541.3L 534.1L 534.2.1L 534.2.3.4.2 534.2.3.4.3 534.2.3.4.4
SS 563-1 : 2010(2017)	Code of practice for the design, installation and maintenance of emergency lighting and power supply systems in buildings - Part 1: Emergency lighting	110.1.3L 528.1.1 528.1.2L 560.8.1L 560.9L
SS 563-2 : 2010(2017)	Code of practice for the design, installation and maintenance of emergency lighting and power supply systems in buildings - Part 2: Installation requirements and maintenance procedures	110.1.3L 528.1.1 528.1.2L 560.9L
SS CP 5 : 1998	Code of practice for electrical installations	National Foreword 410L
SS CP 10 : 2005 (under revision)	Code of practice for the installation and servicing of electrical fire alarm systems	110.1.3L 528.1.1 528.1.2L 560.8.1L 560.10L 612.3.2L
SS CP 52 : 2004	Code of practice for automatic fire sprinkler system	560.8.1L
SS CP 88-1 : 2001 (under revision)	Code of practice for temporary electrical installations – Construction and building sites	551.1.3L 704
SS CP 88-2 : 2001 (under revision)	Code of practice for temporary electrical installations - Festive lighting, trade-fairs, mini-fairs and exhibition sites	110.1.3L 551.1.3L 740
TR 25 : 2016	Electric vehicle charging system	411.3.3L 722
NOTE – On graphical symbols, IEC 60617 is the central standards database for electrotechnical symbols. They used to be covered by BS 6217, IEC 60417 and IEC 60617. In 2002, IEC launched an 'on-line' database format for the symbol library, available on subscription from the IEC website. Following this decision, in 2004 CENELEC decided to cease publication of IEC 60417 in 'paper' form, to withdraw the then-existing standards and formally to adopt the IEC database without any changes for use in Europe. Consequently, the British Standard versions have now also been withdrawn.		
Other standards to which reference is made in this Code		
IEC TS 61201 : 2007	Use of conventional touch voltage limits - Application guide	414.2L
DD CLC/TS 61643-12 : 2009	Low-voltage surge protective devices. Surge protective devices connected to low-voltage power distribution systems. Selection and application principles	534.1L 534.2.1L 534.2.3.1.2

COPYRIGHT

Appendix 2(L)
(informative)

Statutory requirements

In the Republic of Singapore, electrical installations are required to comply with the statutory requirements stipulated in the legislations and regulations indicated below. Information concerning these regulations may be obtained from the appropriate authority indicated.

(i)	Building Control Act	Building and Construction Authority
(ii)	Code of Practice for Info-communication Facilities in Buildings	Infocomm Media Development Authority
(iii)	Consumer Protection (Safety Requirements) Regulations	Enterprise Singapore
(iv)	Consumer Protection (Trade Description and Safety Requirements) Act	Enterprise Singapore
(v)	Fire Safety Act (Chapter 109A)	Fire Safety and Shelter Department, Singapore Civil Defence Force
(vi)	Transmission Code	Energy Market Authority
(vii)	The Electricity Act (Chapter 89A) and its subsidiary regulations	Energy Market Authority
(viii)	Workplace Safety and Health Act (Chapter 354A)	Ministry of Manpower

COPYRIGHT

Appendix 3
(informative)

Time/current characteristics of overcurrent protective devices and rcds

Fuses:

This Appendix gives the time/current characteristics of the following overcurrent protective devices:

Figure 3A1 Fuses to IEC 60269-3 fuse system C

Figures 3A2(a) & 3A2(b) Semi-enclosed fuses to BS 3036

Figures 3A3(a) & 3A3(b) Fuses to IEC 60269-2 fuse systems E(bolted) and G(clip-in)

Circuit- breakers:

Figure 3A4 Type B to IEC 60898-1 and the overcurrent characteristics of RCBOs to SS 480

Figure 3A5 Type C to IEC 60898-1 and the overcurrent characteristics of RCBOs to SS 480

Figure 3A6 Type D to IEC 60898-1 and the overcurrent characteristics of RCBOs to SS 480

In all of these cases time/current characteristics are based on the slowest operating times for compliance with the Code and have been used as the basis for determining the limiting values of earth fault loop impedance prescribed in Chapter 41.

Maximum earth fault loop impedance

411.3.2 specifies maximum disconnection times for circuits. 411.4.6 to 411.4.9L provide maximum earth fault loop impedances (Z_s) that will result in protective devices operating within the required disconnection times.

The maximum earth fault loop impedance for a protective device is given by:

$$Zs = \frac{U_0}{I_a}$$

where:

U_0 is the nominal a.c. rms line voltage to Earth.
I_a is the current causing operation of the protective device within the specified time.

The tabulated values are applicable for supplies from distribution network operators. For other supplies the designer will need to determine the nominal voltage and calculate Z_s accordingly.

RCDs:

Table 3A gives the time/current performance criteria for RCDs to SS 97and SS 480.

COPYRIGHT

Table 3A – Time/current performance criteria for RCDs to SS 97 and SS 480

RCD type	Rated residual operating current $I_{\Delta n}$ mA	Residual current mA	Trip time ms	Residual current mA	Trip time ms	Residual current mA	Trip time ms
General Non-delay	10	10	300 max	20	150 max	50	40 max.
	30	30		60		150	
	100	100		200		500	
	300	300		600		1500	
	500	500		1000		2500	
Delay 'S'	100	100	130 min 500 max	200		500	40 min. 150 max.
	300	300		600	60 min 200 max	1500	
	500	500		1000		2500	

COPYRIGHT

Figure 3A1 – Fuses to IEC 60269-3 fuse system C

Maximum operating time/current characteristics for fuses to IEC 60269-3 fuse system						
Fuse rating	Current for time					
	0.1 sec	0.2 sec	0.4 sec	1 sec	5 secs
5 A	30 A	25 A	22 A	18 A	15 A
16 A	130 A	110 A	95 A	76 A	56 A
20 A	160 A	135 A	113 A	93 A	68 A
32 A	320 A	280 A	240 A	200 A	140 A
45 A	550 A	450 A	380 A	300 A	220 A
63 A	820 A	700 A	600 A	460 A	320 A
80 A	1100 A	960 A	800 A	650 A	430 A
100 A	1450 A	1230 A	1050 A	850 A	580 A

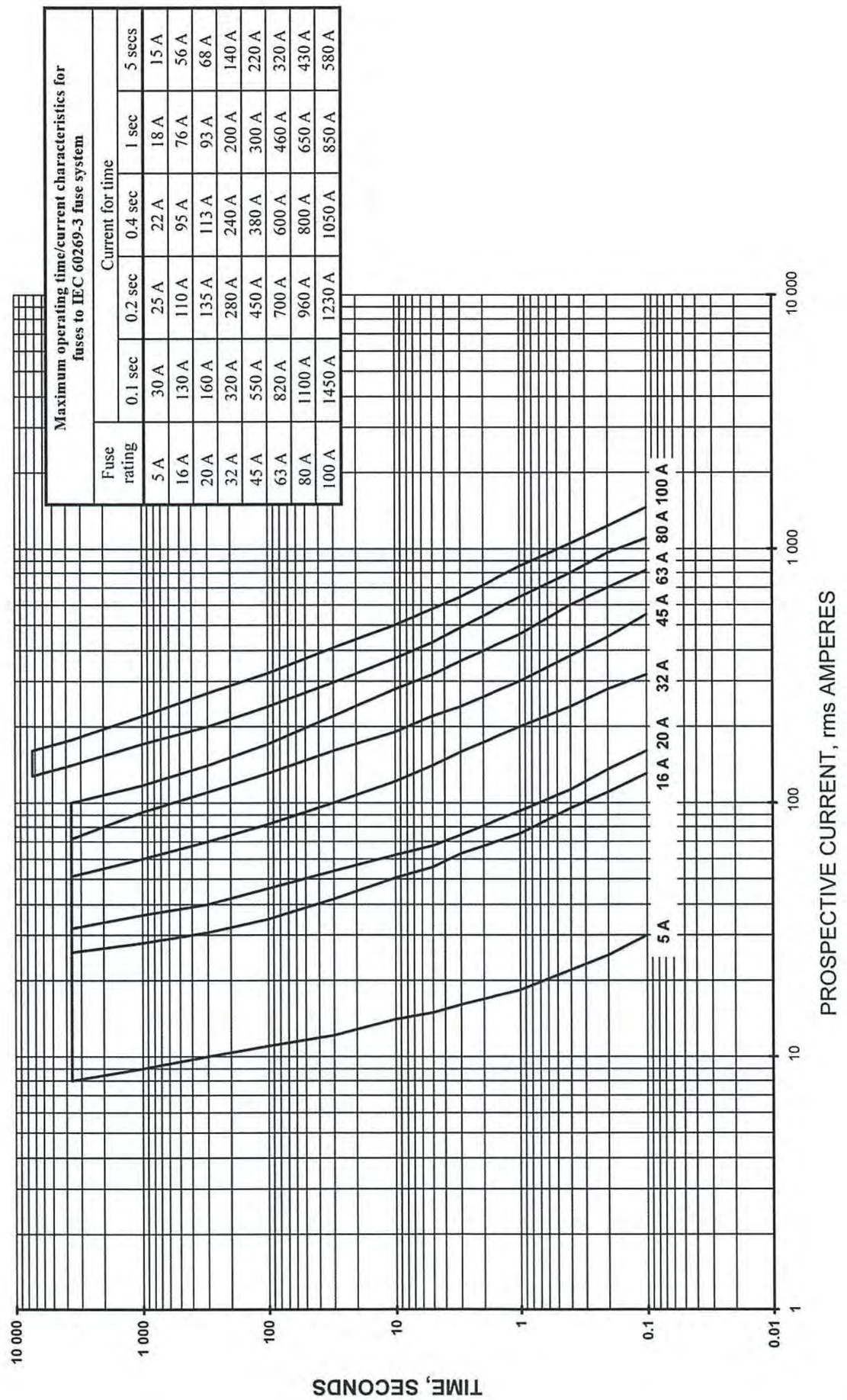

COPYRIGHT

Figure 3A2(a) – Semi-enclosed fuses to BS 3036

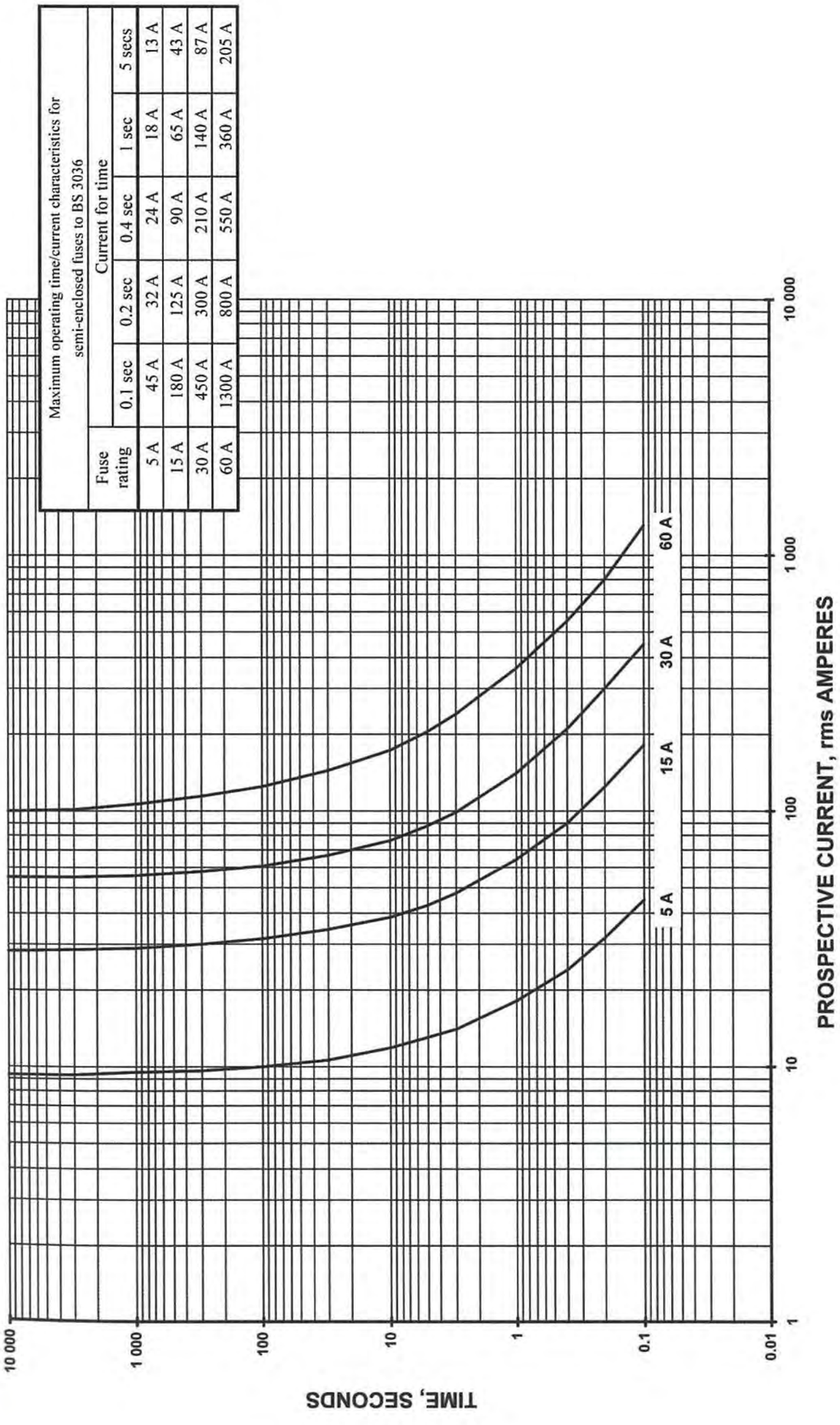

Maximum operating time/current characteristics for semi-enclosed fuses to BS 3036

Fuse rating	Current for time				
	0.1 sec	0.2 sec	0.4 sec	1 sec	5 secs
5 A	45 A	32 A	24 A	18 A	13 A
15 A	180 A	125 A	90 A	65 A	43 A
30 A	450 A	300 A	210 A	140 A	87 A
60 A	1300 A	800 A	550 A	360 A	205 A

COPYRIGHT

Figure 3A2(b) – Semi-enclosed fuses to BS 3036

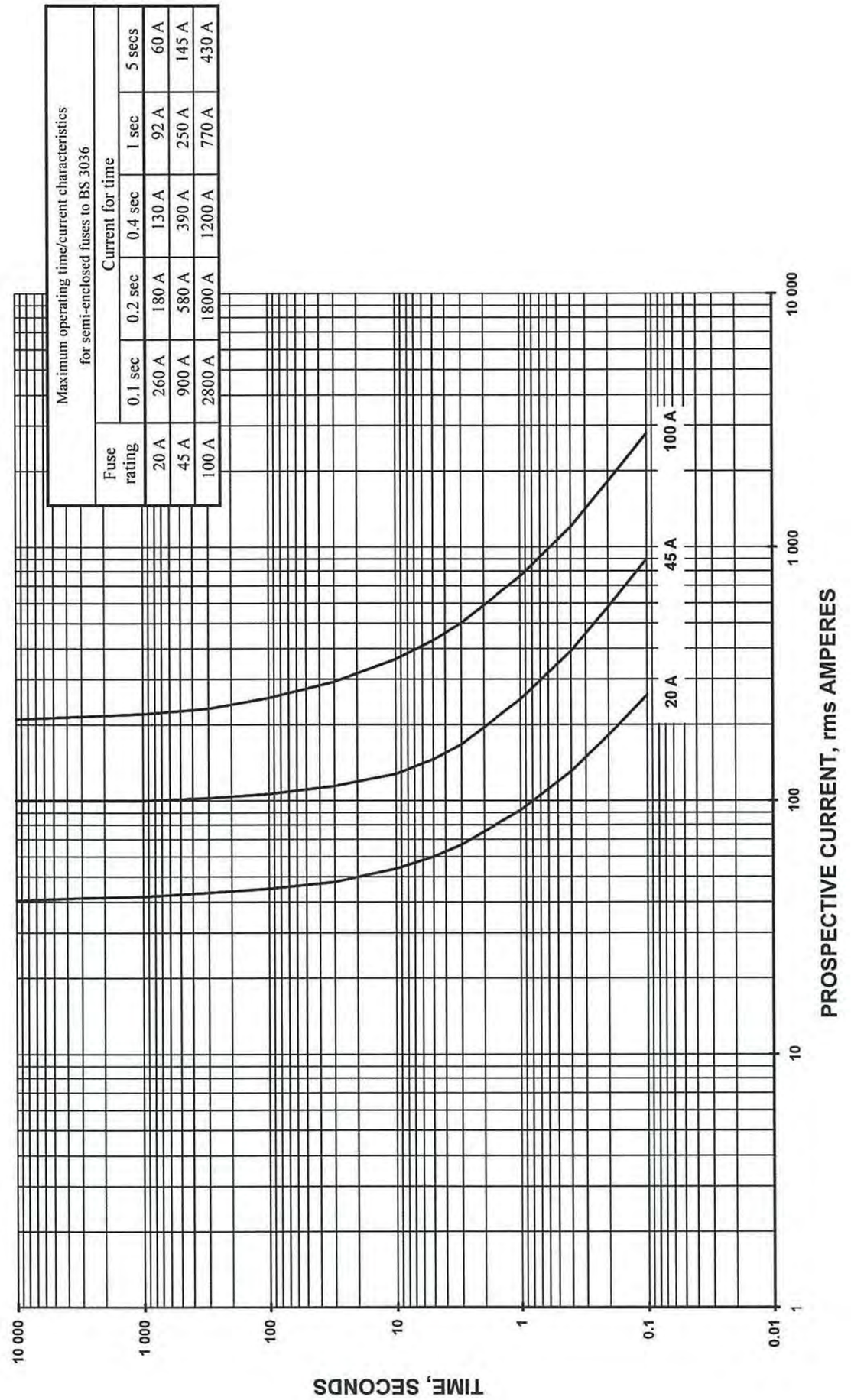

COPYRIGHT

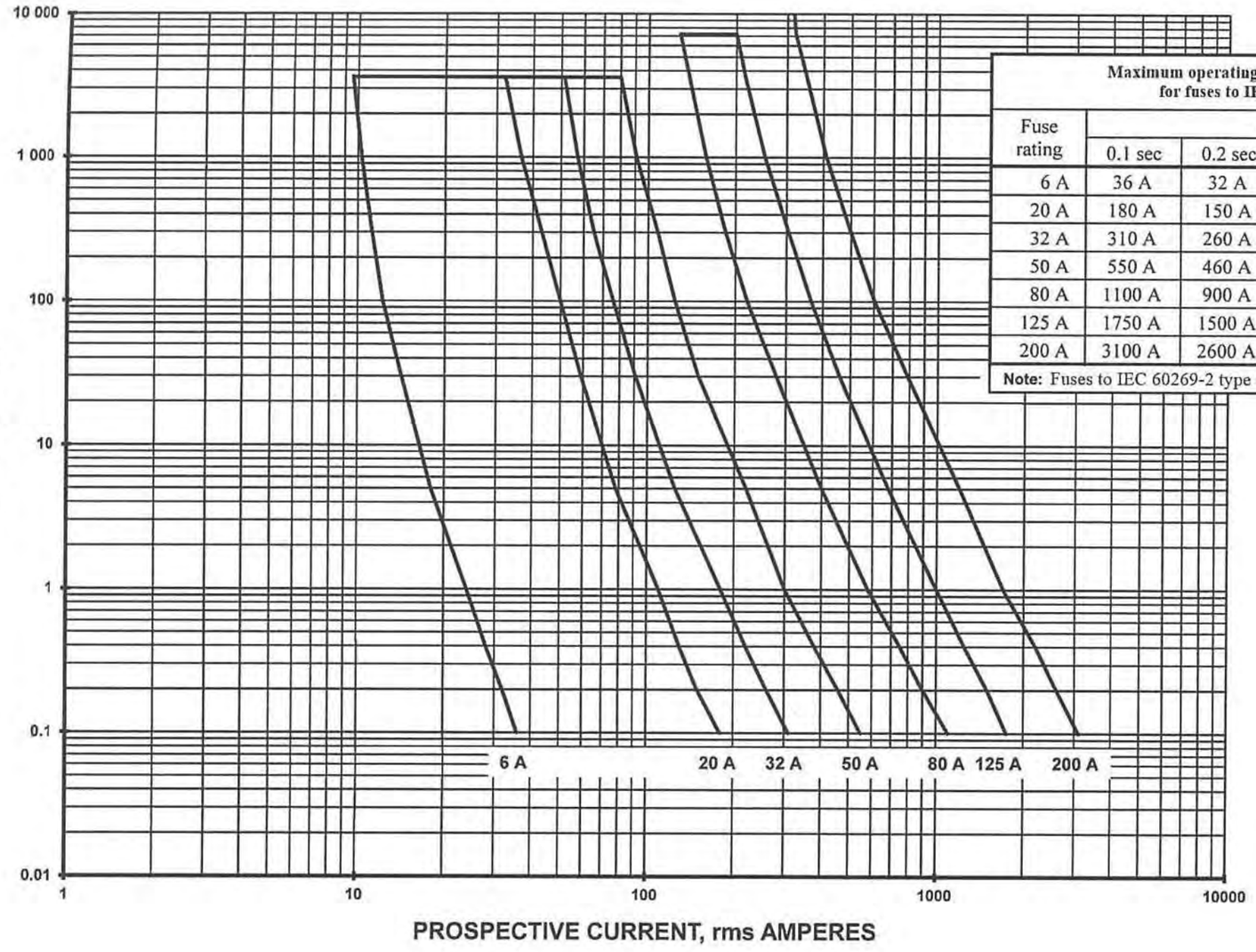

Maximum operating time/current characteristics for for fuses to IEC 60269-2 fuse system C					
Fuse rating	Current for time				
	0.1 sec	0.2 sec	0.4 sec	1 sec	5 secs
6 A	36 A	32 A	28 A	24 A	18A
20 A	180 A	150 A	130 A	110 A	78A
32 A	310 A	260 A	220 A	180 A	125 A
50 A	550 A	460 A	380 A	300 A	220 A
80 A	1100 A	900 A	750 A	580 A	400 A
125 A	1750 A	1500 A	1250 A	1000 A	680 A
200 A	3100 A	2600 A	2200 A	1700 A	1200 A
Note: Fuses to IEC 60269-2 type G have ratings up to 125A.					

Figure 3A3(a) –Fuses to IEC 60269-2 fuse systems E and G

COPYRIGHT

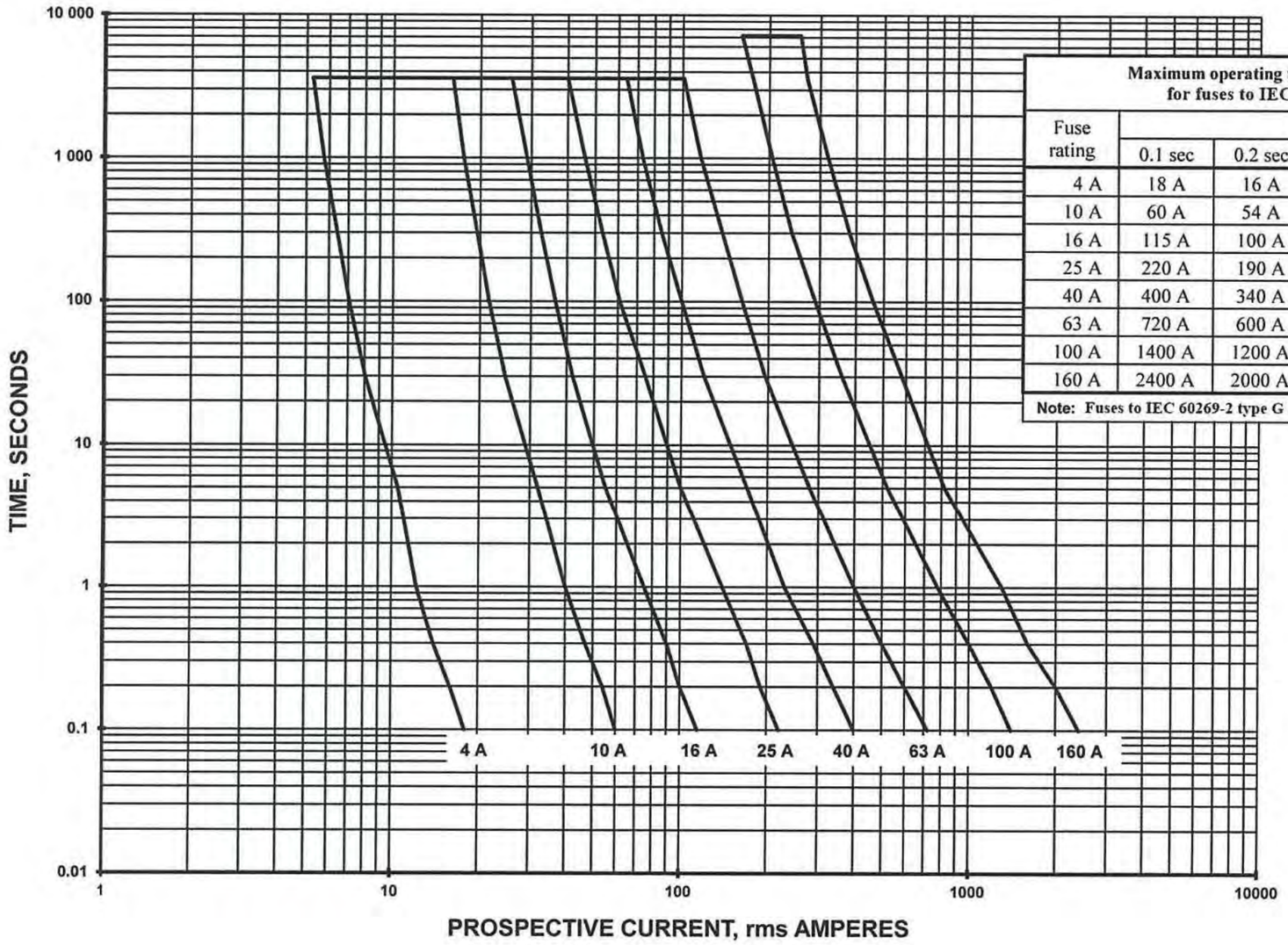

Maximum operating time/current characteristics for fuses to IEC 60269-2 fuse system C.					
Fuse rating	Current for time				
	0.1 sec	0.2 sec	0.4 sec	1 sec	5 secs
4 A	18 A	16 A	14 A	12.2 A	10.5 A
10 A	60 A	54 A	47 A	40 A	32 A
16 A	115 A	100 A	90 A	75 A	55 A
25 A	220 A	190 A	170 A	140 A	100 A
40 A	400 A	340 A	290 A	230 A	170 A
63 A	720 A	600 A	500 A	400 A	280 A
100 A	1400 A	1200 A	1000 A	780 A	520 A
160 A	2400 A	2000 A	1600 A	1300 A	820 A
Note: Fuses to IEC 60269-2 type G have ratings up to 125A.					

Figure 3A3(b) –Fuses to IEC 60269-2 fuse systems E and G

COPYRIGHT

Figure 3A4 –Type B circuit-breakers to IEC 60898-1 and RCBOs to SS 480

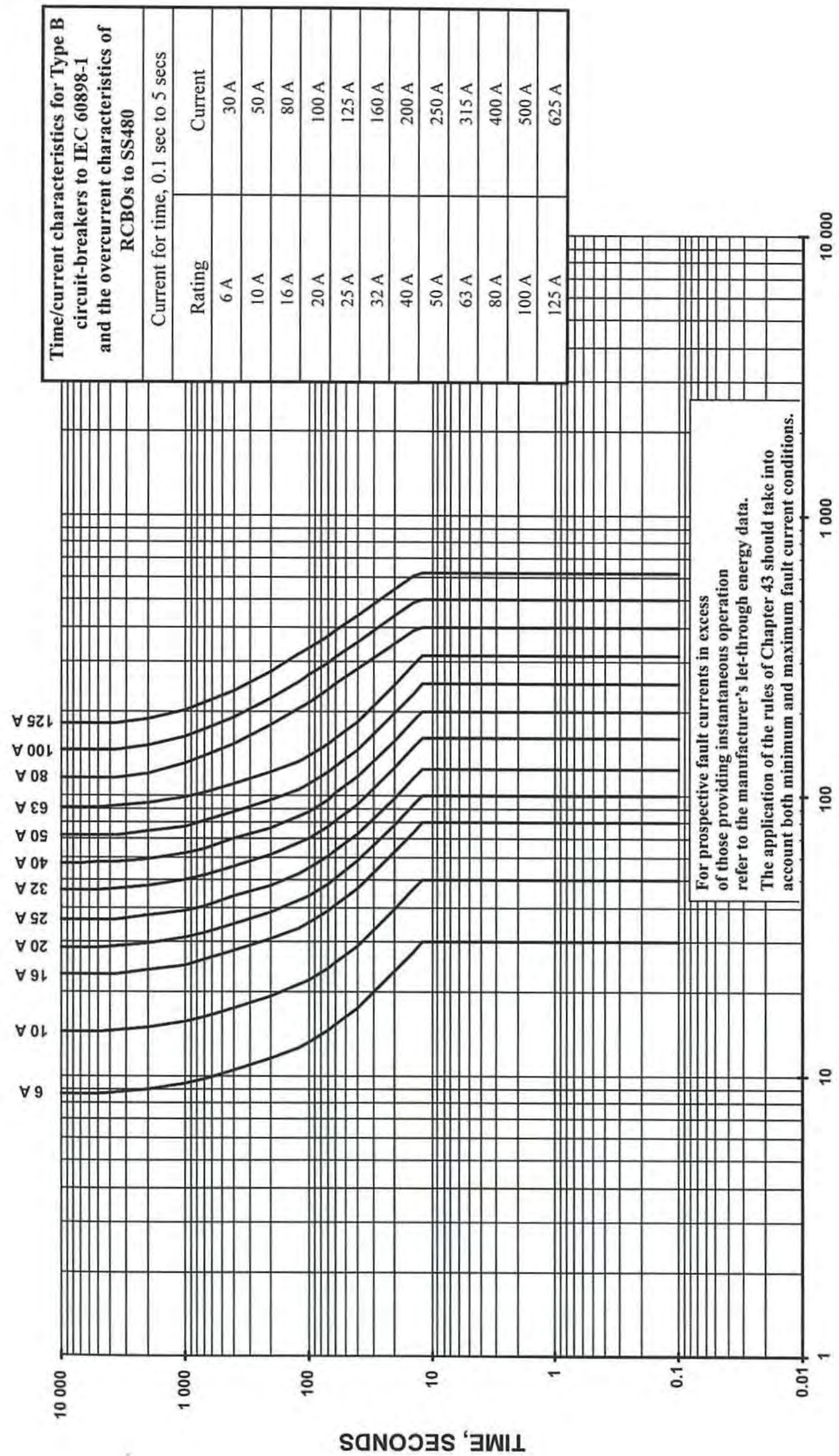

COPYRIGHT

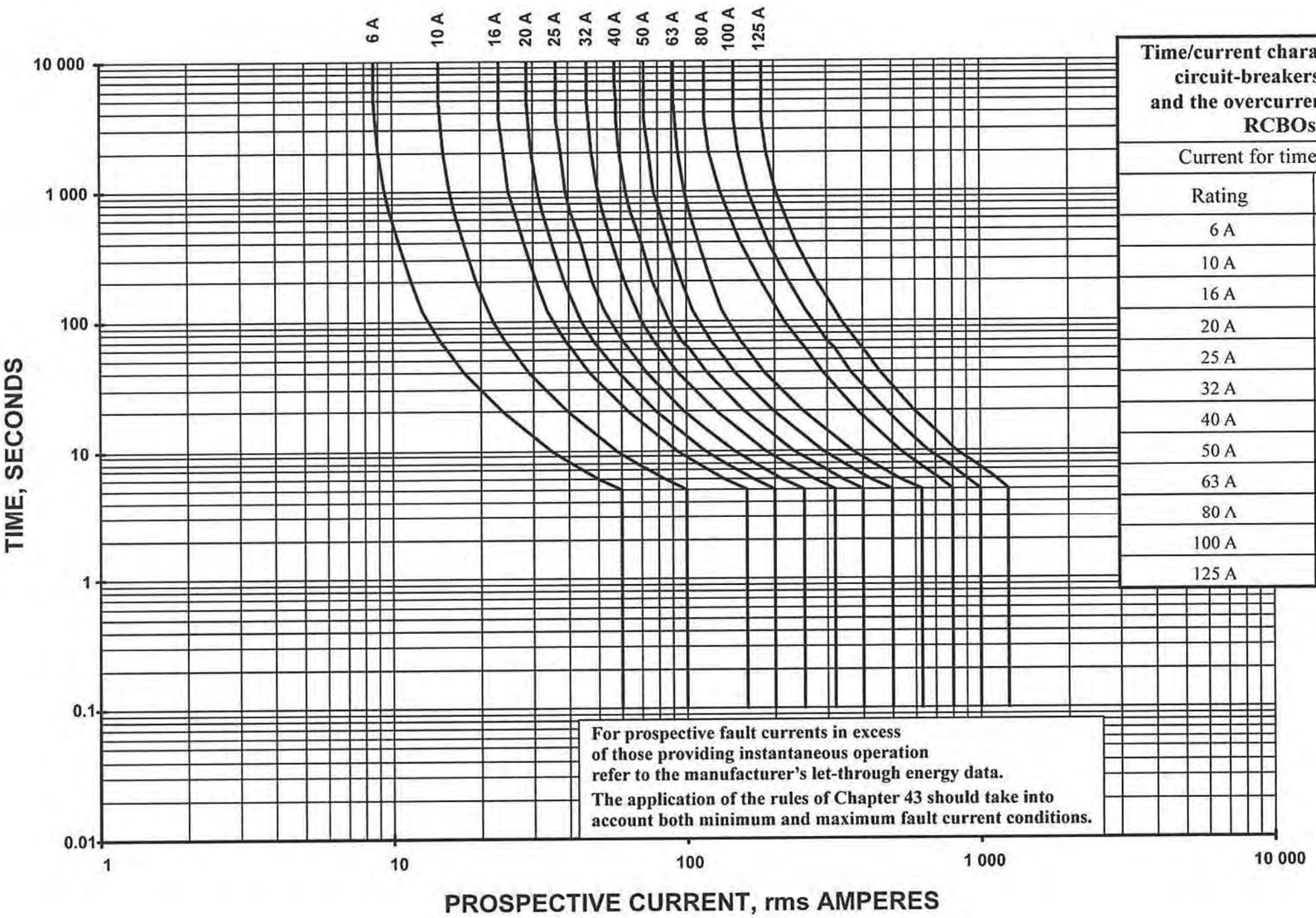

Time/current characteristics for Type C circuit-breakers to IEC 60898-1 and the overcurrent characteristics of RCBOs to SS480	
Current for time, 0.1 sec to 5 secs	
Rating	Current
6 A	60 A
10 A	100 A
16 A	160 A
20 A	200 A
25 A	250 A
32 A	320 A
40 A	400 A
50 A	500 A
63 A	630 A
80 A	800 A
100 A	1000 A
125 A	1250 A

Figure 3A5 –Type C circuit-breakers to IEC 60898-1 and RCBOs to SS 480

COPYRIGHT

Figure 3A6 –Type D circuit-breakers to IEC 60898-1 and RCBOs to SS 480

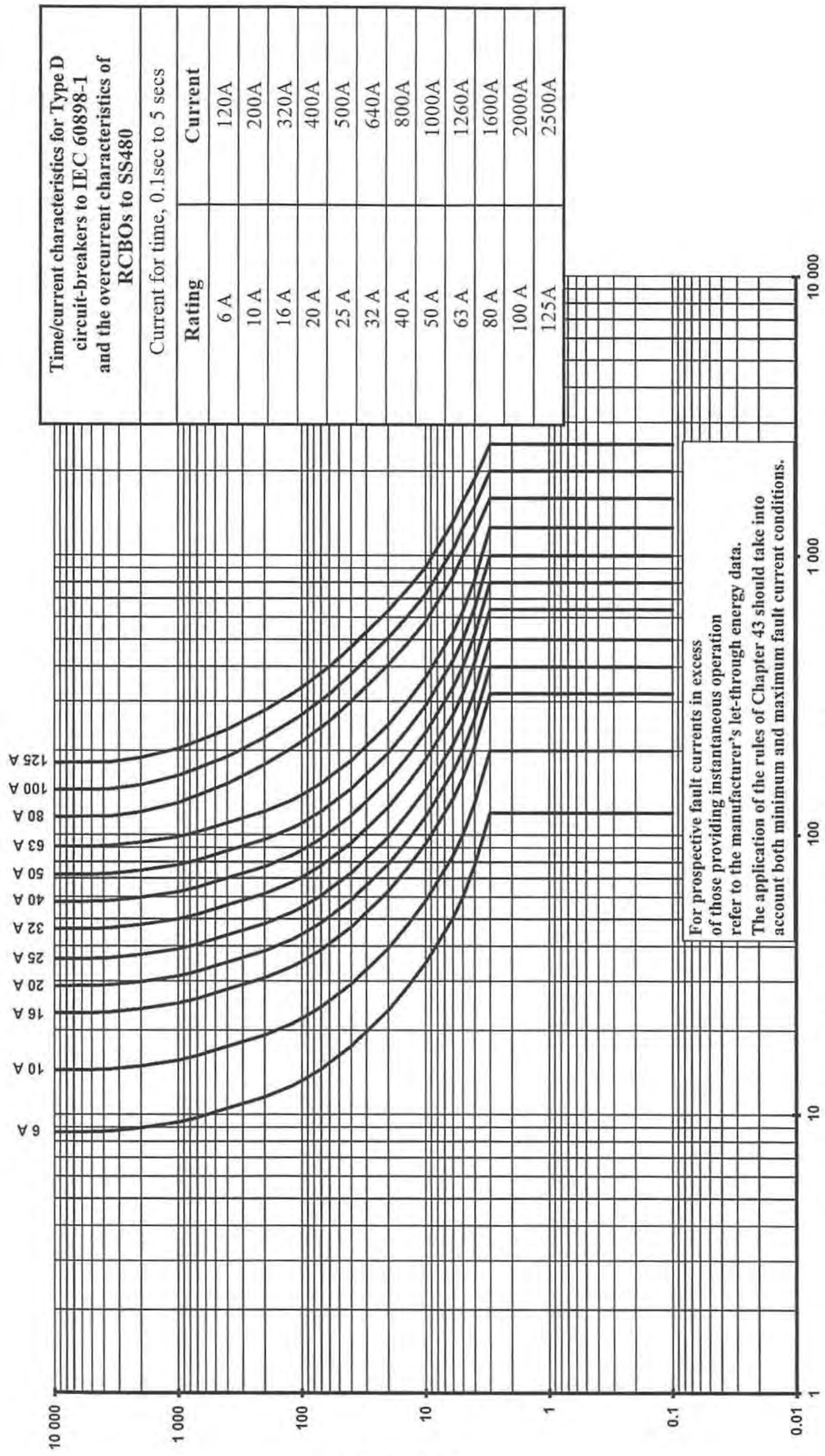

COPYRIGHT

Appendix 4(L)
(informative)

Current-carrying capacity and voltage drop for cables

Preface to the tables

1. Basis of tabulated current-carrying capacity

The current-carrying capacity set out in this Appendix takes account of IEC Publication 364-5-523 (1983), so far as the latter is applicable. For types of cable not treated in the IEC Publication (e.g. armoured cables) the current-carrying capacities given in this Appendix are based on data provided by ERA Technology Ltd, and the British Cable Makers' Confederation. See also ERA Report 69-30 "Current rating standards for distribution cables"*.

The tabulated current-carrying capacity related to continuous loading and is also known as the 'full thermal current rating' of the table, corresponding to the conductor operating to the conductor operating temperature indicated in the headings to the tables concerned. It is intended to provide for a satisfactory life of conductor and insulation subject to the thermal effects of carrying current for sustained periods in normal service. A cable may be seriously damaged, leading to early failure, or its service life may be significantly reduced, if it is operated for any prolonged period at a temperature higher than the indicated value.

In addition, there are other considerations affecting the choice of the cross-sectional area of a conductor, such as the requirements for protection against electric shock (see Chapter 41), protection against thermal effects (see Chapter 42), overcurrent protection (see Chapter 43 and Section 5 below), voltage drop (see Section 7 below) and the limiting temperatures for terminals of equipment to which the conductors are connected.

The tabulated current-carrying capacity relates to a single circuit in the installation methods shown in Table 4A, in an ambient air temperature of 30 °C. The current-carrying capacity given in the tables for a.c. operation apply only to frequencies in the range 49 to 61 Hz. For other conditions appropriate correction factors are to be applied as described below.

The current ratings given for single-core amoured cable are for the condition of cable bonded at both ends to earth.

Further information on cables installed in thermal insulation may be obtained from ERA Report 85-0111 "The temperature rise of cables passing through short lengths of thermal insulation"*.

2. Correction factors for current-carrying capacity

The current-carrying capacity of a cable for continuous service is affected by ambient temperature, by grouping, by partial or total enclosure in thermal insulating material and, for a.c. by frequency. This Appendix provides correction factors in these respects as follows.

2.1 Ambient Temperature. Tables 4C1 and 4C2 give the correction factor to be applied to the tabulated current-carrying capacity depending upon the actual ambient temperature of the location in which the cable is to be installed.

* ERA Technology Ltd, Cleve Road, Leatherhead, Surrey, United Kingdom KT22 7SA.

In practice the ambient air temperatures may be determined by thermometers places in free air as close as practicable to the position at which the cables are installed or are to be installed, subject to

COPYRIGHT

the proviso that the measurements are not to be influenced by the heat arising from the cables; thus if the measurements are made while the cables are loaded, the thermometers should be placed about 0.5 m or ten times the overall diameter of the cable, whichever is the lesser, from the cables, in the horizontal plane, or 150 mm below the lowest of the cables.

Tables 4C1 and 4C2 do not take account of temperature increase, if any, due to solar or other infra-red radiation. Where cables are subject to such radiation, the current-carrying capacity may need to be specially calculated.

2.2 Grouping. Tables 4B1, 4B2 and 4B3 give the correction factor to be applied to be tabulated current-carrying capacity where cables or circuits are grouped.

2.3 Other frequencies. In extreme cases, notably for large multicore cables, the reduction in current-carrying of cables carrying, for example, balanced 400 Hz a.c. compared with the curreny-carrying capacity at 50 Hz, may be as much as 50%. For small cables and flexible cords, such as may be used to supply individual tools, the difference in the 50 Hz and the 400Hz current-carrying capacities may be negligible.

3. Effective current-carrying capacity

The current-carrying capacity of a cable corresponds to the maximum current that can be carried in specified conditions without the conductors exceeding the permissible limit of steady state temperature for the type of insulation concerned.

The values of current tabulated represent the effective current-carrying capacity only where no correction factor is applicable. Otherwise the current-carrying capacity corresponds to the tabulated value multiplied by the appropriate factor or factors for ambient temperature, grouping and thermal insulation, as applicable.

Irrespective of the type of overcurrent protective device associated with the conductors concerned, the ambient temperature correction factors to be used when calculating current-carrying capacity (as opposed to those used when selecting cable sizes) are those given in Table 4C1.

4. Relationship of current-carrying capacity to other circuit parameters

The relevant symbols used in this Code are as follows:

I_z the current-carrying capacity of a cable for continuous service, under the particular installation conditions concerned.

I_t the value of current tabulated in this Appendix for the type of cable and installation method concerned, for a single circuit in an ambient temperature of 30 °C.

I_b the design current of the circuit, i.e. the current intended to be carried by the circuit in normal service.

I_n the nominal current or current setting of the device protecting the circuit against overcurrent.

I_2 the operating current (i.e. the fusing current or tripping current for the conventional operating time) of the device protecting the circuit against overload.

COPYRIGHT

C a correction factor to be applied where the installation conditions differ from those for which values of current-carrying capacity are tabulated in this Appendix. The various correction factors are identified as follows:

C_a for ambient temperature

C_g for grouping

C_i for thermal insulation

C_t for operating temperature of conductor

In all circumstances I_z must be not less than I_b and I_n also must be not less than I_b.

Where the overcurrent device is intended to afford protection against overload, I_2 must not exceed 1.45 times I_z and I_n must not exceed I_z (see Section 5 below).

Where the overcurrent device is intended to afford short circuit protection only, I_n can be greater than I_z and I_2 can be greater than 1.45 times I_z. The protective device is then to be selected for compliance with 434.5.2L.

5. Overload protection

Where overload protection is required, then type of protection provided does not affect the current-carrying capacity of a cable for continuous service (I_z) but it may affect the choice of conductor size. The operating conditions of a cable are influenced not only by the limiting conductor temperature for continuous service, but also by the conductor temperature which might be attained during the conventional operating time of the overload protection device, in the event of an overload

This means that the operating current of the protective device must not exceed 1.45 I_z. Where the protective device is a fuse to IEC 60269-3 or a miniature circuit breaker to IEC 60898-1, this requirement is satisfied by selecting a value of I_z not less than I_n.

In practice, because of the standard steps in nominal rating of fuses and circuit breakers, it is often necessary to select a value of I_n exceeding I_b. in that case, because it is also necessary for I_z in turn to be not less than the selected value of I_n, the choice of conductor cross-sectional area may be dictated by the overload conditions and the current-carrying capacity (I_z) of the conductors will not always be fully used.

The size needed for a conductor protected against overload by a BS 3036 semi-enclosed fuse can be obtained by the use of a correction factor, 1.45/2 = 0.725, which results in the same degree of protection as that afforded by other overload protective devices. This factor is to be applied to the nominal rating of the fuse as a divisor, thus indicating the minimum value of I_t required of the conductors to be protected. In this case also, the choice of conductor size is dictated by the overload conditions and the current-carrying capacity (I_z) of the conductors cannot be fully used.

6. Determination of the size of cable to be used

Having established the design current (I_b) of the circuit under consideration, the appropriate procedure described in Sections 6.1 to 6.4 below will enable the designer to determine the size of the cable it will be necessary to use.

As a preliminary step it is useful to identify the length of the cable run and the permissible voltage drop for the equipment being supplies, as this may be an over-riding considering (see Section 525 and Section 7 of this Appendix). The permissible voltage drop in mV, divided by I_b and by the length of run, will give the value of voltage drop in mV/A/m which can be tolerated. A voltage drop not exceeding that

COPYRIGHT

value is identified in the appropriate table and the corresponding cross-sectional area of conductor needed on this account can be read off directly before any other calculations are made.

The conductor size necessary from consideration of the conditions of normal load and overload is then determined. All correction factors affecting I_z (i.e. the factors for ambient temperature, grouping and thermal insulation) can, if desired, be applied to the values of I_t as multipliers. This involves a process of trial and error until a cross-sectional area is reached which ensures that I_z is not less than I_b and not less than I_n of any protective device it is intended to select. In any event, if a correction factor for protection by a semi-enclosed fuse is necessary, this has to be applied to I_n as a divisor. It is therefore more convenient to apply all the correction factors to I_n as divisors.

This method is used in Sections 6.1 and 6.3 below and produces a value of current and that value (or the next larger value) can readily be located in the appropriate table to current-carrying capacity and the corresponding cross-sectional area of conductor can be identified directly. It should be noted that the value of I_t appearing against the chosen cross-sectional area is not I_z. It is not necessary to know I_z where the size of conductor is chosen by this method, but if it is desired to identify I_z the value is determined by the method indicated in Section 3 above.

However, this method cannot be used for cables installed in enclosed trenches (installation Methods 18, 19 and 20 of Table 4A) because the correction factors given in Table 4B3 are related to conductor cross-sectional areas. For such cables it is therefore necessary to use the process of trial and error described in the third paragraph above, selecting on a trial basis a particular size of cable from, for instance, voltage drop considerations.

6.1 Where overload protection is afforded by a fuse to IEC 60269-3 or a miniature circuit breaker to IEC 60898-1:

6.1.1 For single circuits

- DIVIDE the nominal current of the protective device (I_n) by any applicable correction factor for ambient temperature (C_a) given in Table 4C1.

- then further DIVIDE by any applicable correction factor for thermal insulation (C_i).

The size of cable to be used is to be such that its tabulated current-carrying capacity (I_t) is not less than the value of nominal current of the protective device adjusted as above:

$$I_t \geq \frac{I_n}{C_a\, C_i} \qquad (1)$$

6.1.2 For groups

- DIVIDE the nominal current of the protective device (I_n) by the correction factor for grouping (C_g) given in Tables 4B1, 4B2 or 4B3:

$$I_t \geq \frac{I_n}{C_g} \qquad (2)$$

Alternatively, it may be selected in accordance with the following formulae, provided that the circuits of the group are not liable to simultaneous overload:

$$I_t \geq \frac{Ib}{Cg}, \textit{ and} \qquad (3)$$

COPYRIGHT

$$I_t \geq \sqrt{I_n^2 + 0.48\, I_b^2\, \left(\frac{1-C_g^2}{C_g^2}\right)} \quad (4)$$

The size of cable to be used is to be such that its tabulated single-circuit current-carrying capacity (I_t) is not less than the value of I_t calculated in accordance with Formula (2) above or, where Formulae (3) and (4) are used not less than the larger of the resulting two values of I_t.

Where correction factors C_a and/or C_i are applicable, they are to be applied as divisors to the value of I_t determined by the above formulae.

6.2 Where the protective device is a semi-enclosed fuse to BS 3036:

6.2.1 For single circuits

- DIVIDE the nominal current of the fuse (I_n) by any applicable correction factor for ambient temperature (C_a) given in Table 4C2
- then further DIVIDE by any applicable correction factor for thermal insulation, (C_i)
- then further DIVIDE by 0.725

The size of cable to be used is to be such that its tabulated current-carrying capacity (I_t) is not less than the value of nominal current of the fuse adjusted as above:

$$I_t \geq \frac{I_n}{0.725\, C_a\, C_i} \quad (5)$$

6.2.2 For groups

- DIVIDE the nominal current of the fuse by 0.725 and by the applicable correction factor grouping (C_g) given in Table 4B1, 4B2 or 4B3:

$$I_t \geq \frac{I_n}{0.725\, C_g} \quad (6)$$

Alternatively, it may be selected by the following formulae, provided that the circuits of the group are not liable to simultaneous overload:

$$I_t \geq \frac{Ib}{Cg}, \text{ and} \quad (7)$$

$$I_t \geq \sqrt{I_n^2 + 0.48\, I_b^2\, \left(\frac{1-C_g^2}{C_g^2}\right)} \quad (8)$$

The size of cable to be used is to be such that its tabulated single-circuit current-carrying capacity (I_t) is not less than the value of I_t calculated in accordance with Formula (6) above or, where Formulae (7) and (8) are used, not less than the larger of the resulting two values of I_t.

Where correction factors C_a and/or C_i are applicable, they are to be applied as divisors to the value of I_t determined by the above formulae.

6.3 Where overload protection is not required:

Where 433.3.1 applies, and the cable under consideration is not required to be protected against overload, the design current of the circuit (I_b) is to be divided by any applicable correction factors, and

COPYRIGHT

the size of the cable to be used is to be such that its tabulated current-carrying capacity (I_t) for the installation method concerned is not less than the value of I_b adjusted as above:

$$I_t \geq \frac{Ib}{C_a\, C_g\, C_i} \tag{9}$$

6.4 Variation of installation conditions along a cable route

The procedures in Sections 6.1 to 6.3 above are based on the assumption that all the conditions necessitating the use of correction factors apply to the same part of the route of the conductors of the circuit. Where various factors apply to different parts of the route, each part may be treated separately, or alternatively only the factor or combination of factors appropriate to the most onerous conditions encountered along the route may be applied to the whole of the route. It is permissible to obtain more precise factors by calculation of the various conductor temperature rises that will occur along such a route, provided that the appropriate limiting temperature of the conductor is nowhere exceeded (see 523.1).

6.5 Rating factors for triple harmonic currents in four-core and five-core cables with four cores carrying current

6.5.1 Rating factors

523.6.3L states that, where the neutral conductor carries current without a corresponding reduction in load of the line conductors, the current in the neutral conductor shall be taken into account in ascertaining the current- carrying capacity of the circuit.

This section is intended to cover the situation where there is current flowing in the neutral of a balanced three-phase system. Such neutral currents are due to the line currents having a harmonic content which does not cancel in the neutral. The most significant harmonic which does not cancel in the neutral is usually the third harmonic. The magnitude of the neutral current due to the third harmonic may exceed the magnitude of the power frequency line current. In such a case the neutral current will have a significant effect on the current-carrying capacity of the cables of the circuit.

The rating factors given in this Appendix apply to balanced three-phase circuits; it is recognised that the situation is more onerous if only two of the three phases are loaded. In this situation, the neutral conductor will carry the harmonic currents in addition to the unbalanced current. Such a situation can lead to overloading of the neutral conductor.

Equipment likely to cause significant harmonic currents includes, for example, variable-speed motor drives, fluorescent lighting banks and d.c. power supplies such as those found in computers. Further information on harmonic disturbances can be found in the relevant part of IEC 61000 series.

The rating factors given in the following table only apply to cables where the neutral conductor is within a four-core or five-core cable and is of the same material and cross-sectional area as the line conductors. These rating factors have been calculated on the basis of third harmonic currents measured with respect to the fundamental frequency of the line current. Where the total harmonic distortion is more than 15%, due to the third harmonic or multiples thereof, e.g. 9th, 15th, etc. then lower rating factors are applicable. Where there is an imbalance between phases of more than 50% then lower rating factors may be applicable.

The tabulated rating factors, when applied to the current-carrying capacity of a cable with three loaded conductors, will give the current-carrying capacity of a cable with four loaded conductors where the current in the fourth conductor is due to harmonics. The rating factors also take the heating effect of the harmonic current in the line conductors into account.

Where the neutral current is expected to be higher than the line current then the cable size should be selected on the basis of the neutral current.

COPYRIGHT

Where the cable size selection is based on a neutral current which is not significantly higher than the line current it is necessary to reduce the tabulated current-carrying capacity for three loaded conductors.

If the neutral current is more than 135% of the line current and the cable size is selected on the basis of the neutral current, then the three line conductors will not be fully loaded. The reduction in heat generated by the line conductors offsets the heat generated by the neutral conductor to the extent that it is not necessary to apply any rating factor to the current-carrying capacity for three loaded conductors, to take account of the effect of four loaded conductors.

Table 4 – Rating factors for triple harmonic currents in four-core and five-core cables

Third harmonic content of line current* %	Rating factor	
	Size selection is based on line current	Size selection is based on neutral current
0 – 15	1.0	–
>15 – 33	0.86	–
>33 – 45	–	0.86
> 45	–	1.0

*NOTE – The third harmonic content expressed as total harmonic distortion.

6.5.2 Example of the application of rating factor for third harmonic currents

Consider a three-phase circuit with a design load (fundamental current) of 58 A is to be installed using a four-core 90 °C thermosetting insulated cable. The cable will be installed in a group with 3 other circuits on a perforated cable tray (Method 11) in an expected maximum ambient temperature of 35 °C . The cable will be protected at its origin using a circuit-breaker to IEC 60898-1.

Case 1: Load does not produce third harmonic currents

The design current, I_b, of the three-phase load is 58 A.

To satisfy 433.1.1, $I_n \geq I_b$, so the rated current of the circuit-breaker, I_n, is selected to be 63 A. The required tabulated current-carrying capacity, I_t, under the above operational conditions is to satisfy:

$$I_t \geq \frac{I_n}{C_a C_g}$$ (where circuits of the group are assumed to be liable to simultaneous overload)

From Table 4C1, C_a = 0.96 and from Table 4B1, C_g = 0.77

$$I_t = \frac{63}{0.96 \times 0.77} = 85.2A$$

From Table 4E4A, a 16 mm^2 cable with copper conductors and steel wire armour has a tabulated current-carrying capacity of 99 A and hence it is suitable if third harmonic currents are not present in the circuit.

Case 2: Load produces an additional third harmonic content – THD-i = 20%

For the second case it is assumed that the above load is expected to produce third harmonic distortion of 20% in addition to the fundamental line current.

COPYRIGHT

The fundamental line current of the above load is 58 A. Since the third harmonic content is between 15-33%, the cable sizing is based upon the line current. Because the load has 20% third harmonic the design current used for the selection of the protective device is given by:

$$I_{bh} = 58 \times \sqrt{1^2 + 0.2^2} = 59.1\,A$$

where:

I_{bh} = design current including the effect of third harmonic currents

To satisfy 433.1.1, $I_n \geq I_b$, so the rated current of the circuit-breaker, I_n, is selected to be 63 A. In addition, to comply with 431.2.3, overcurrent detection shall be provided for the neutral conductor. Therefore, a 4-pole protective device with overcurrent protection of the neutral should be provided. The required tabulated current-carrying capacity, It, under the above operational conditions is to satisfy:

$$I_t \geq \frac{I_n}{C_a C_g \times 0.86}$$ (where circuits of the group are assumed to be liable to simultaneous overload)

The factor of 0.86 is taken from the above table.

Applying the above grouping and temperature rating factors, the required tabulated current-carrying capacity is found to be 99.1 A.

From Table 4E4A, a 16 mm^2 cable has a tabulated current-carrying capacity of 99 A, thus a rule-based system may select a 25 mm^2 cable whereas a designer may exercise judgement and select a 16 mm^2 cable.

Case 3: Load produces third harmonic content – THD-i =42%

The load is expected to produce third harmonic distortion of 42% of the fundamental line current.

The fundamental line current of the above load is 58 A. Since the third harmonic content is between 33-45%, the cable sizing is based upon the neutral current with a rating factor of 0.86 applied to the current-carrying capacity of the cable. In addition, to comply with 431.2.3, overcurrent detection must be provided for the neutral conductor. Therefore, a 4-pole protective device with overcurrent protection of the neutral should be provided.

The neutral current arising from third harmonics is given by

$$I_{bn} = \frac{3h}{100} I_{nL}$$

where:

I_{bn} = neutral current due to third harmonic currents

I_{nL} = fundamental line current

h = third harmonic as a percentage of the fundamental line current.

Hence, the neutral current of the circuit is I_{bn} = 3 x 0.42 x 58 = 73 A.

Therefore, the design current of the circuit due to third harmonics is 73 A.

COPYRIGHT

To satisfy 433.1.1, $I_n \geq I_b$, so the rated current of the circuit-breaker, I_n, is selected to be 80 A. The required tabulated current-carrying capacity, I_t, under the above operational conditions is to satisfy:

$$I_t \geq \frac{I_n}{C_a C_g \times 0.86}$$ (where circuits of the group are assumed to be liable to simultaneous overload)

Applying the above grouping and temperature rating factors, the required tabulated current-carrying capacity is found to be 125.8 A.

From Table 4E4A, a 25 mm^2 cable is necessary to compensate for the additional thermal effect due to third harmonic current.

All the above cable selections are based on the current-carrying capacity of the cable; voltage drop and other aspects of design have not been considered.

6.6 Harmonic currents in line conductors

Item 6.5 above covers the effect of additive harmonic currents flowing in the neutral conductor. The rating factors given in item 6.5 take account of the heating effect of the third harmonic in the neutral as well as the heating effect of the third harmonic in each of the line conductors.

Where other harmonics are present, e.g. 5th, 7th etc, the heating effect of these harmonics in the line conductors has to be taken into account. For smaller sizes, less than 50 mm^2, the effect of harmonic currents can be taken into account by applying the following factor, C_h, to the fundamental design current.

$$C_h = \sqrt{\frac{I_f^2 + I_{h5}^2 + \ldots + I_{hn}^2}{I_f^2}}$$

where:

I_f = 50 Hz current

I_{h5} = 5th harmonic current

I_{hn} = nth harmonic current

For larger conductor sizes the increase in conductor resistance, due to skin and proximity effects, at higher frequencies has to be taken into account. The resistance at harmonic frequencies can be calculated using the equations given in IEC 60287-1-1.

7. Tables of voltage drop

In the Tables, values of voltage drop are given for a current of one ampere for a metre run, i.e. for a distance of 1 m along the route taken by the cables, and represent the results of the voltage drops in all the circuit conductors. The values of voltage drop assume that the conductors are at their maximum permitted normal operating temperatures.

The values in the tables, for a.c. operation, apply only to frequencies in the range 49 to 61 Hz and for single-core armoured cables the tabulated values apply where the armour is bonded to earth at both ends. The values of voltage drop for cables operating at higher frequencies may be substantially greater.

For a given run, to calculate the voltage drop (in mV) the tabulated value of voltage drop per ampere per metre for the cable concerned has to be multiplied by the length of the run in metres and by the current the cable is intended to carry namely the design current of the circuit (I_b) in amperes. For three-

COPYRIGHT

phase circuits the tabulated mV/A/m values related to the line voltage and balanced conditions have been assumed.

For cables having conductors of 16 mm^2 or less cross-sectional area their inductances can be ignored and $(mV/A/m)_r$ values only are tabulated. For cables having conductors greater than 16 mm^2 cross-sectional area the impedance values are given as $(mV/A/m)_z$, together with the resistive component $(mV/A/m)_r$ and the reactive component $(mV/A/m)_x$.

The direct use of the tabulated $(mV/A/m)_r$ or $(mV/A/m)_z$ values, as appropriate, may lead to pessimistically high calculated values of voltage drop or, in other words, to unnecessarily low values of permitted circuit lengths.

For example, where the design current of a circuit is significantly less than the effective current-carrying capacity of the cable chosen, the actual voltage drop would be less than the calculated value because the conductor temperature (and hence its resistance) will be less than that on which the tabulated mV/A/m had been based.

As regards power factor in a.c. circuits the use of the tabulated mV/A/m values, (for the larger cable sized, the tabulated $(mV/A/m)_z$ values) to calculate the voltage drop is strictly correct only when the phase angle of the cable equals that of the load. When the phase angle of the cable does not equal that of the load, the direct use of the tabulated mV/A/m or $(mV/A/m)_z$ values leads to a calculated value of voltage drop higher than the actual value. In some cases, it may be advantageous to take account of the load power when calculating voltage drop.

Where a more accurate assessment of voltage drop is desirable the following methods may be used.

7.1 Correction for operating temperature

For cables having conductors of cross-sectional area 16 mm^2 or less the design value of mV/A/m is obtained by multiplying the tabulated value by a factor C_t, given by

$$C_t \geq \frac{230 + t_p - \left(C_a^2\ C_g^2 - \frac{I_b^2}{I_t^2}\right)(t_p - 30)}{230 + t_p} \qquad (10)$$

where t_p = maximum permitted normal operating temperature, °C

This equation applies only where the overcurrent protective device is other than a BS 3036 fuse and where the actual ambient temperature is equal to or greater than 30 °C

NOTE – For convenience, the above formula is based on the resistance-temperature coefficient of 0.004 per °C at 20 °C for both copper and aluminum conductors.

For cables having conductors of cross-sectional area greater than 16 mm^2, only the resistive component of the voltage drop is affected by the temperature and the factor C_t is therefore applied only to the tabulated value of $(mV/A/m)_r$ and the design value of $(mV/A/m)_z$ is given by the vector sum of $C_t(mV/A/m)_r$ and $(mV/A/m)_x$.

For very large conductor sizes where the resistive component of voltage drop is much less than the corresponding reactive part (i.e. when $x/r \geq 3$) this correction factor need not be considered.

7.2 Correction for load power factor

For cables having conductors of cross-sectional area of 16 mm^2 or less the design value of mV/A/m is obtained approximately by multiplying the tabulated value by the power factor of the load, cos ϕ.

COPYRIGHT

For cables having conductors of cross-sectional area greater than 16 mm^2 the design value of mV/A/m is given approximately by:

$$\cos \phi \text{ (tabulated (mV/A/m)}_r\text{)} + \sin \phi \text{ (tabulated (mV/A/m)}_x\text{)}$$

For single-core cables in flat formation the tabulated values apply to the outer cables and may underestimate for the voltage drop between an outer cable and the centre cable for cross-sectional areas above 240 mm^2 and power factors greater than 0.8.

7.3 Combined correction for both operating temperature and load power factor

From Sections 7.1 and 7.2 above, where it is considered appropriate to correct the tabulated mV/A/m values for both operating temperature and load power factor, the design values of mV/A/m are given by:

for cables having conductors of 16 mm^2 or less cross-sectional area

$$C_t \cos \phi \text{ (tabulated mV/A/m)}$$

for cables having conductors of cross-sectional area greater than 16 mm^2

$$C_t \cos \phi \text{ (tabulated (mV/A/m)}_r\text{)} + \sin \phi \text{ (tabulated (mV/A/m)}_x\text{)}.$$

8. Methods of installation of cables

Table 4A lists the methods of installation for which this Appendix provides guidance for the selection of the appropriate cable size. The methods of installation distinguished by bold type are reference methods for which the current-carrying capacities given in Tables 4D1 to 4L4 have been determined. For the other methods, an indication is given of the appropriate reference method having values of current-carrying capacity which can safely be applied.

The use of other methods is not precluded, where specified by a suitably qualified electrical engineer; in that case the evaluation of current-carrying capacity may need to be based on experimental work.

COPYRIGHT

TABLE 4A (continued)

Installation method		Examples	Appropriate Reference Method for determining current-carrying capacity
Number	Description		
1	2	3	4
6	Sheathed cables in conduit in a thermally insulating wall etc. (otherwise as Reference Method 4)	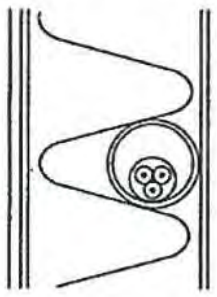	Method 4
7	Cables in conduit embedded in masonry, brickwork, concrete, plaster or the like (other than thermally insulating materials)		Method 3
In trunking:			
8	Cables in trunking on a wall or suspended in the air	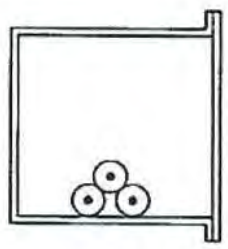	Method 3
9	Cables in flush floor trunking	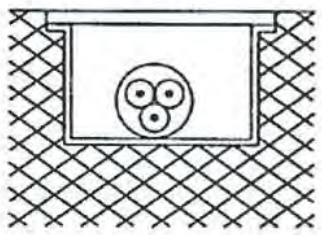	Method 3
10	Single-core cables in skirting trunking	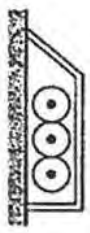	Method 3
On trays:			
11	**Sheathed cables on a perforated cable tray, bunched and unenclosed. A perforated cable tray is considered as a tray in which the holes occupy at least 30% of the surface area**	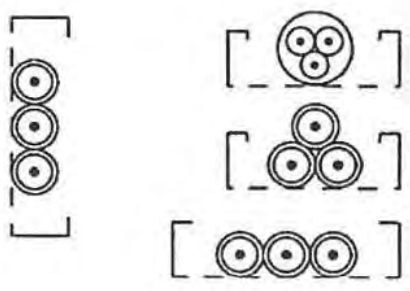	**Method 11**

COPYRIGHT

TABLE 4A (continued)

Installation method		Examples	Appropriate Reference Method for determining current-carrying capacity
Number	Description		
1	2	3	4
In free air, on cleats, brackets or a ladder:			
12	**Sheathed single-core cables in free air (any supporting metalwork under the cables occupying less than 10% of the plan area):** **Two or three cables vertically one above the other, minimum distance between cable surfaces equal to the overall cable diameter (D_e); distance from the wall not less than $0.5D_e$** **Two or three cables horizontally, with spacings as above** **Three cables in trefoil, distance between wall and surface of nearest cable $0.5D_e$ or nearest cables $0.75D_e$**	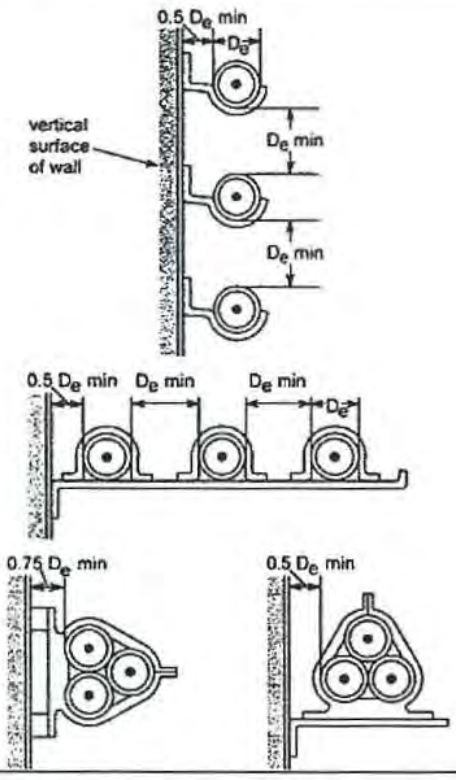	**Method 12**
13	**Sheathed multicore cables on ladder or brackets, separation greater than $2D_e$** **Sheathed multicore cables in free air distance between wall and cable surface not less than $0.3D_e$** **Any supporting metalwork under the cables occupying less than 10% of the plan area**	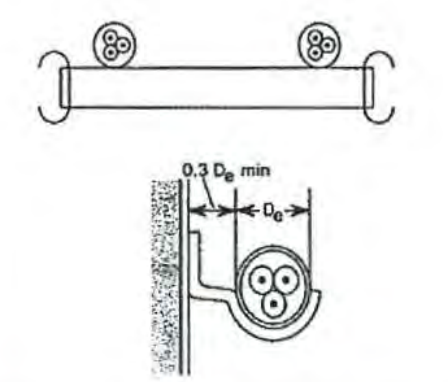	**Method 13**
14	Cables suspended from or incorporating a catenary wire	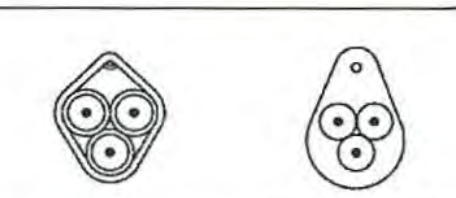	Method 12 or 13, as appropriate
Cables in building voids:			
15	Sheathed cables installed directly in a thermally insulating wall or above a thermally insulating ceiling, the cable being in contact with a thermally conductive surface on one side (otherwise as Reference Method 4)	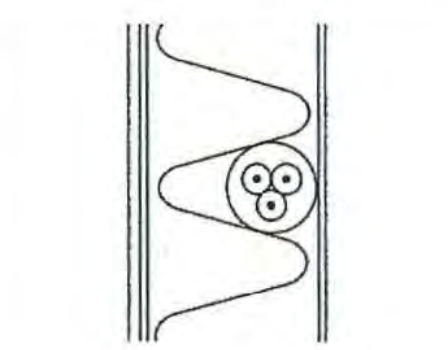	Method 4

COPYRIGHT

TABLE 4A (continued)

Installation method		Examples	Appropriate Reference Method for determining current-carrying capacity
Number	Description		
1	2	3	4
16	Sheathed cables in ducts or voids formed by the building structure, other than thermally insulating materials	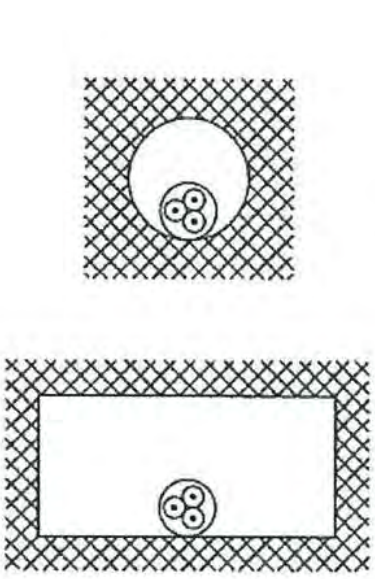	Method 4 Where the cable has a diameter D_e and the duct has a diameter not greater than $5D_e$ or a perimeter not greater than $20D_e$ Method 3 Where the duct has either a diameter greater than $5D_e$ or a perimeter greater than $20D_e$ NOTE 1 - Where the perimeter is greater than $60D_e$, installation Methods 18 to 20, as appropriate, should be used. NOTE 2 - D_e is the overall cable diameter. For groups of cables D_e is the sum of the cable diameters.
Cables in trenches:			
17	Cables supported on the wall of an open or ventilated trench, with spacings as indicated for Reference Method 12 or 13 as appropriate	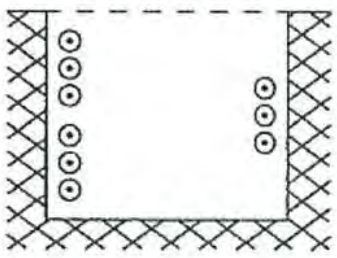	Method 12 or 13, as appropriate
18	**Cables in enclosed trench 450 mm wide by 300 mm deep (minimum dimensions) including 100 mm cover**	Two single-core cables with surfaces separated by a minimum of one cable diameter. 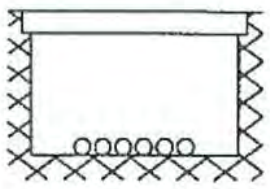 Three single-core cables in trefoil and touching throughout. 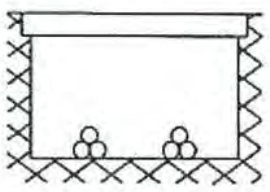 Multicore cables or groups of single-core cables with surfaces separated by a minimum of 50 mm 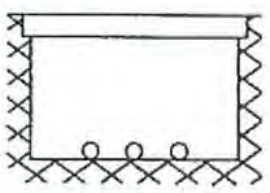	**Method 18** **Use rating factors in Table 4B3**

COPYRIGHT

TABLE 4A (continued)

Installation method		Examples	Appropriate Reference Method for determining current-carrying capacity
Number	Description		
1	2	3	4
19	**Cables in enclosed trench 450 mm wide by 600 mm deep (minimum dimensions) including 100 mm cover**	Single-core cables arranged in flat groups of two or three on the vertical trench wall with surfaces separated by one diameter with a minimum distance of 50 mm between groups. Multicore cables installed with surfaces separated by a minimum* of 75 mm. All cables spaced at least 25 mm from the trench wall. 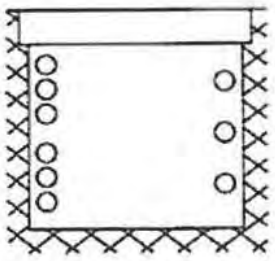	**Method 19 Use rating factors in Table 4B3**
20	**Cables in enclosed trench 600 mm wide by 760 mm deep (minimum dimensions) including 100 mm cover**	Single-core cables arranged in groups of two or three in flat formation with the surfaces separated by one diameter or in trefoil formation with cables touching. 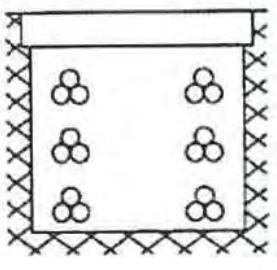 Groups separated by a minimum* of 50 mm either horizontally or vertically. Multicore cables installed with surfaces separated by a minimum* of 75 mm either horizontally or vertically. All cables spaced at least 25 mm from the trench wall. 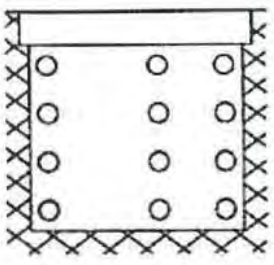	**Method 20 Use rating factors in Table 4B3**

* Larger spacing to be used where practicable.

COPYRIGHT

Table 4A1 – Schedule of cable specifications and current rating tables

Specification number	Specification title	Applicable current rating tables	Conductor operating temperature
BS 5467: 2016	Electric cables. Thermosetting insulated, armoured cables of rated voltages of 600/1000 V and 1900/3300 V for fixed installations. Specification	4E1, 4E2, 4E3, 4E4, 4L1, 4L2, 4L3, 4L4	90 °C
BS 6004: 2012	Electric cables. PVC insulated and PVC sheathed cables for voltages up to and including 300/500 V, for electric power and lighting	4D1, 4D2, 4H3, 4K1, 4K2	60 °C, 70 °C,
BS 6207-1: 1995 (withdrawn) Retained here for historical purposes	Mineral insulated cables with a rated voltage not exceeding 750 V. Cables	4J1, 4J2	70 °C, 105 °C
BS 6231: 2006	Electric cables. Single core PVC insulated flexible cables of rated voltage 600/1000 V for switchgear and controlgear wiring	4D1	70 °C
BS 6346: 1997 (withdrawn) Retained here for historical purposes	Electric cables. PVC insulated, armoured cables for voltages of 600/1000 V and 1900/3300 V	4D1, 4D2, 4D3, 4D4, 4K1, 4K2, 4K3, 4K4	70 °C
BS 6724: 2016	Electric cables. Thermosetting insulated, armoured cables of rated voltages of 600/1000 V and 1900/3300 V for fixed installations, having low emission of smoke and corrosive gases when affected by fire. Specification.	4E3, 4E4, 4L3, 4L4	90 °C
BS 6883: 1999	Elastomer insulated cables for fixed wiring in ships and on mobile and fixed offshore units. Requirements and test methods	4F1, 4F2	85 °C
BS 7211: 2012	Electric cables. Thermosetting insulated and thermoplastic shealthed cables for voltages up to and including 450/750 V for electric power and lighting and having low emission of smoke and corrosive gases when affected by fire	4E1, 4E2	90 °C
BS 7629-1: 2015	Electric cables. Specification for 300/500 V fire resistant, screened, fixed installation cables having low emission of smoke and corrosive gases when affected by fire. Multicore cables	4D2	70 °C
BS EN 50525-1 BS EN 50525-2-11 BS EN 50525-2-12 BS EN 50525-2-21 BS EN 50525-2-41 BS EN 50525-2-42 BS EN 50525-2-51 BS EN 50525-2-71 BS EN 50525-2-83 BS EN 50525-3-21	Electric cables. Low voltage energy cables of rated voltages up to and including 450/750 V (U_0/U)	4F1, 4F2, 4H1, 4H2, 4H3	60 °C, 85 °C

COPYRIGHT

TABLE 4B1

Correction factors for groups of more than one circuit of single-core cables, or more than one multicore cable (to be applied to the corresponding current-carrying capacity for a single circuit in Tables 4D1 to 4D4, 4E1 to 4E4, 4F1 and 4F2, 4J1, 4K1 to 4K4, 4L1 to 4L4)**

Reference method of installation (see Table 4A)		Correction factor (C_g) Number of circuits or multicore cables													
		2	3	4	5	6	7	8	9	10	12	14	16	18	20
Enclosed (Method 3 or 4) or bunched and clipped direct to a non-metallic surface (Method 1)		0.80	0.70	0.65	0.60	0.57	0.54	0.52	0.50	0.48	0.45	0.43	0.41	0.39	0.38
Single layer clipped to a non-metallic surface (Method 1)	Touching	0.85	0.79	0.75	0.73	0.72	0.72	0.71	0.70	-	-	-	-	-	-
	Spaced*	0.94	0.90	0.90	0.90	0.90	0.90	0.90	0.90	0.90	0.90	0.90	0.90	0.90	0.90
Single layer *multicore* on a perforated metal cable tray, vertical or horizontal (Method 11)	Touching	0.86	0.81	0.77	0.75	0.74	0.73	0.73	0.72	0.71	0.70	-	-	-	-
	Spaced*#	0.91	0.89	0.88	0.87	0.87	-	-	-	-	-	-	-	-	-
Single layer *single-core* on a perforated metal cable tray, touching (Method 11)	Horizontal	0.90	0.85	-	-	-	-	-	-	-	-	-	-	-	-
	Vertical	0.85	-	-	-	-	-	-	-	-	-	-	-	-	-
Single layer multicore touching on ladder supports (Method 13)		0.86	0.82	0.80	0.79	0.78	0.78	0.78	0.77	-	-	-	-	-	-

* Spaced by a clearance between adjacent surfaces of at least one cable diameter (D_e). Where the horizontal clearances between adjacent cables exceeds $2D_e$ no correction factor need be applied.

** When cables having differing conductor operating temperatures are grouped together, the current rating shall be based upon the lowest operating temperature of any cable in the group.

\- Correction factor not tabulated.

\# Not applicable to mineral insulated cables see Table 4B2.

TABLE 4B2

Correction factors for mineral insulated cables installed on perforated tray, (to be applied to the corresponding current-carrying capacity for single circuits for reference method 11 in Table 4J1A)

Tray orientation	Arrangement of cables	Number of trays	Number of multicore cables or circuits					
			1	2	3	4	6	9
Horizontal	Multiconductor cables touching	1	1.0	0.90	0.80	0.80	0.75	0.75
Horizontal	Multiconductor cables spaced ‡	1	1.0	1.0	1.0	0.95	0.90	-
Vertical	Multiconductor cables touching	1	1.0	0.90	0.80	0.75	0.75	0.70
Vertical	Multiconductor cables spaced ‡	1	1.0	0.90	0.90	0.90	0.85	-
Horizontal	Single conductor cables trefoil separated ‡‡	1	1.0	1.0	0.95			
Vertical	Single conductor cables trefoil separated ‡‡	1	1.0	0.90	0.90			

‡ Spaced by a clearance between adjacent surfaces of at least one cable diameter (D_e).

‡‡ Separated by a clearance between adjacent surfaces of at least two cable diameters ($2D_e$).

\- Correction factor not tabulated.

NOTES to Tables 4B1 and 4B2

1. The factors in the table are applicable to groups of cables all of one size. The value of current derived from application of the appropriate factors is the maximum current to be carried by any of the cables in the group.
2. If, due to known operating conditions, a cable is expected to carry not more than 30% of its *grouped* rating, it may be ignored for the purpose of obtaining the rating factor for the rest of the group.
   For example, a group of N loaded cables would normally require a group reduction factor of C_g applied to the tabulated I_t. However, if M cables in the group carry loads which are not greater than $0.3\ C_g I_t$ amperes the other cables can be sized by using the group rating factor corresponding to (N-M) cables.
3. When cables having differing conductor operating temperatures are grouped together, the current rating shall be based on the lowest operating temperature of any cable in the group.
4. Where the horizontal clearances between adjacent cables exceeds $2D_e$, no correction factor need be applied.

COPYRIGHT

TABLE 4B3

Correction factors for cables installed in enclosed trenches (Installation Methods 18, 19 and 20 of Table 4A)*

The correction factors tabulated below relate to the disposition of cables illustrated in items 18 to 20 of Table 4A and are applicable to the current-carrying capacities for Reference Methods 12 or 13 of Table 4A as given in the relevant tables of this appendix.

	Correction factor									
	Installation Method 18				Installation Method 19			Installation Method 20		
Conductor cross-sectional area	2 single-core cables, or 1 three- or four-core cable	3 single-core cables, or 2 two-core cables	4 single-core cables, or 2 three- or four-core cables	6 single-core cables, 4 two-core cables, or 3 three- or four-core cables	6 single-core cables, 4 two-core cables, or 3 three- or four-core cables	8 single-core cables, or 4 three- or four-core cables	12 single-core cables, 8 two-core cables, or 6 three- or four-core cables	12 single-core cables, 8 two-core cables, or 6 three- or four-core cables	18 single-core cables, 12 two-core cables, or 9 three- or four-core cables	24 single-core cables, 16 two-core cables, or 12 three- or four-core cables
1	2	3	4	5	6	7	8	9	10	11
(mm^2)										
4	0.93	0.90	0.87	0.82	0.86	0.83	0.76	0.81	0.74	0.69
6	0.92	0.89	0.86	0.81	0.86	0.82	0.75	0.80	0.73	0.68
10	0.91	0.88	0.85	0.80	0.85	0.80	0.74	0.78	0.72	0.66
16	0.91	0.87	0.84	0.78	0.83	0.78	0.71	0.76	0.70	0.64
25	0.90	0.86	0.82	0.76	0.81	0.76	0.69	0.74	0.67	0.62
35	0.89	0.85	0.81	0.75	0.80	0.74	0.68	0.72	0.66	0.60
50	0.88	0.84	0.79	0.74	0.78	0.73	0.66	0.71	0.64	0.59
70	0.87	0.82	0.78	0.72	0.77	0.72	0.64	0.70	0.62	0.57
95	0.86	0.81	0.76	0.70	0.75	0.70	0.63	0.68	0.60	0.55
120	0.85	0.80	0.75	0.69	0.73	0.68	0.61	0.66	0.58	0.53
150	0.84	0.78	0.74	0.67	0.72	0.67	0.59	0.64	0.57	0.51
185	0.83	0.77	0.73	0.65	0.70	0.65	0.58	0.63	0.55	0.49
240	0.82	0.76	0.71	0.63	0.69	0.63	0.56	0.61	0.53	0.48
300	0.81	0.74	0.69	0.62	0.68	0.62	0.54	0.59	0.52	0.46
400	0.80	0.73	0.67	0.59	0.66	0.60	0.52	0.57	0.50	0.44
500	0.78	0.72	0.66	0.58	0.64	0.58	0.51	0.56	0.48	0.43
630	0.77	0.71	0.65	0.56	0.63	0.57	0.49	0.54	0.47	0.41

* When cables having different conductor operating temperatures are grouped together the current rating shall be based on the lowest operating temperature of any cable in the group.

COPYRIGHT

TABLE 4B1

Correction factors for groups of more than one circuit of single-core cables, or more than one multicore cable (to be applied to the corresponding current-carrying capacity for a single circuit in Tables 4D1 to 4D4, 4E1 to 4E4, 4F1 and 4F2, 4J1, 4K1 to 4K4, 4L1 to 4L4)**

Reference method of installation (see Table 4A)		Correction factor (C_g) Number of circuits or multicore cables													
		2	3	4	5	6	7	8	9	10	12	14	16	18	20
Enclosed (Method 3 or 4) or bunched and clipped direct to a non-metallic surface (Method 1)		0.80	0.70	0.65	0.60	0.57	0.54	0.52	0.50	0.48	0.45	0.43	0.41	0.39	0.38
Single layer clipped to a non-metallic surface (Method 1)	Touching	0.85	0.79	0.75	0.73	0.72	0.72	0.71	0.70	-	-	-	-	-	-
	Spaced*	0.94	0.90	0.90	0.90	0.90	0.90	0.90	0.90	0.90	0.90	0.90	0.90	0.90	0.90
Single layer *multicore* on a perforated metal cable tray, vertical or horizontal (Method 11)	Touching	0.86	0.81	0.77	0.75	0.74	0.73	0.73	0.72	0.71	0.70	-	-	-	-
	Spaced*#	0.91	0.89	0.88	0.87	0.87	-	-	-	-	-	-	-	-	-
Single layer *single-core* on a perforated metal cable tray, touching (Method 11)	Horizontal	0.90	0.85	-	-	-	-	-	-	-	-	-	-	-	-
	Vertical	0.85	-	-	-	-	-	-	-	-	-	-	-	-	-
Single layer multicore touching on ladder supports (Method 13)		0.86	0.82	0.80	0.79	0.78	0.78	0.78	0.77	-	-	-	-	-	-

* Spaced by a clearance between adjacent surfaces of at least one cable diameter (D_e). Where the horizontal clearances between adjacent cables exceeds $2D_e$ no correction factor need be applied.

** When cables having differing conductor operating temperatures are grouped together, the current rating shall be based upon the lowest operating temperature of any cable in the group.

\- Correction factor not tabulated.

\# Not applicable to mineral insulated cables see Table 4B2.

TABLE 4B2

Correction factors for mineral insulated cables installed on perforated tray, (to be applied to the corresponding current-carrying capacity for single circuits for reference method 11 in Table 4J1A)

Tray orientation	Arrangement of cables	Number of trays	Number of multicore cables or circuits					
			1	2	3	4	6	9
Horizontal	Multiconductor cables touching	1	1.0	0.90	0.80	0.80	0.75	0.75
Horizontal	Multiconductor cables spaced ‡	1	1.0	1.0	1.0	0.95	0.90	-
Vertical	Multiconductor cables touching	1	1.0	0.90	0.80	0.75	0.75	0.70
Vertical	Multiconductor cables spaced ‡	1	1.0	0.90	0.90	0.90	0.85	-
Horizontal	Single conductor cables trefoil separated ‡‡	1	1.0	1.0	0.95			
Vertical	Single conductor cables trefoil separated ‡‡	1	1.0	0.90	0.90			

‡ Spaced by a clearance between adjacent surfaces of at least one cable diameter (D_e).

‡‡ Separated by a clearance between adjacent surfaces of at least two cable diameters ($2D_e$).

\- Correction factor not tabulated.

NOTES to Tables 4B1 and 4B2

1. The factors in the table are applicable to groups of cables all of one size. The value of current derived from application of the appropriate factors is the maximum current to be carried by any of the cables in the group.
2. If, due to known operating conditions, a cable is expected to carry not more than 30% of its *grouped* rating, it may be ignored for the purpose of obtaining the rating factor for the rest of the group.
   For example, a group of N loaded cables would normally require a group reduction factor of C_g applied to the tabulated I_t. However, if M cables in the group carry loads which are not greater than $0.3\ C_g I_t$ amperes the other cables can be sized by using the group rating factor corresponding to (N-M) cables.
3. When cables having differing conductor operating temperatures are grouped together, the current rating shall be based on the lowest operating temperature of any cable in the group.
4. Where the horizontal clearances between adjacent cables exceeds $2D_e$, no correction factor need be applied.

COPYRIGHT

TABLE 4B3

Correction factors for cables installed in enclosed trenches (Installation Methods 18, 19 and 20 of Table 4A)*

The correction factors tabulated below relate to the disposition of cables illustrated in items 18 to 20 of Table 4A and are applicable to the current-carrying capacities for Reference Methods 12 or 13 of Table 4A as given in the relevant tables of this appendix.

	Correction factor									
	Installation Method 18				Installation Method 19			Installation Method 20		
Conductor cross-sectional area	2 single-core cables, or 1 three- or four-core cable	3 single-core cables, or 2 two-core cables	4 single-core cables, or 2 three- or four-core cables	6 single-core cables, 4 two-core cables, or 3 three- or four-core cables	6 single-core cables, 4 two-core cables, or 3 three- or four-core cables	8 single-core cables, or 4 three- or four-core cables	12 single-core cables, 8 two-core cables, or 6 three- or four-core cables	12 single-core cables, 8 two-core cables, or 6 three- or four-core cables	18 single-core cables, 12 two-core cables, or 9 three- or four-core cables	24 single-core cables, 16 two-core cables, or 12 three- or four-core cables
1	2	3	4	5	6	7	8	9	10	11
(mm^2)										
4	0.93	0.90	0.87	0.82	0.86	0.83	0.76	0.81	0.74	0.69
6	0.92	0.89	0.86	0.81	0.86	0.82	0.75	0.80	0.73	0.68
10	0.91	0.88	0.85	0.80	0.85	0.80	0.74	0.78	0.72	0.66
16	0.91	0.87	0.84	0.78	0.83	0.78	0.71	0.76	0.70	0.64
25	0.90	0.86	0.82	0.76	0.81	0.76	0.69	0.74	0.67	0.62
35	0.89	0.85	0.81	0.75	0.80	0.74	0.68	0.72	0.66	0.60
50	0.88	0.84	0.79	0.74	0.78	0.73	0.66	0.71	0.64	0.59
70	0.87	0.82	0.78	0.72	0.77	0.72	0.64	0.70	0.62	0.57
95	0.86	0.81	0.76	0.70	0.75	0.70	0.63	0.68	0.60	0.55
120	0.85	0.80	0.75	0.69	0.73	0.68	0.61	0.66	0.58	0.53
150	0.84	0.78	0.74	0.67	0.72	0.67	0.59	0.64	0.57	0.51
185	0.83	0.77	0.73	0.65	0.70	0.65	0.58	0.63	0.55	0.49
240	0.82	0.76	0.71	0.63	0.69	0.63	0.56	0.61	0.53	0.48
300	0.81	0.74	0.69	0.62	0.68	0.62	0.54	0.59	0.52	0.46
400	0.80	0.73	0.67	0.59	0.66	0.60	0.52	0.57	0.50	0.44
500	0.78	0.72	0.66	0.58	0.64	0.58	0.51	0.56	0.48	0.43
630	0.77	0.71	0.65	0.56	0.63	0.57	0.49	0.54	0.47	0.41

* When cables having different conductor operating temperatures are grouped together the current rating shall be based on the lowest operating temperature of any cable in the group.

COPYRIGHT

TABLE 4C1

Correction factors for ambient temperature where protection is against short-circuit

NOTE: This table applies where the associated overcurrent protective device is intended to provide short-circuit protection only. Except where the device is a semi-enclosed fuse to BS 3036 the table also applies where the device is intended to provide overload protection.

Type of insulation	Operating temperature	Ambient temperature (°C)														
		25	30	35	40	45	50	55	60	65	70	75	80	85	90	95
Rubber (flexible cables only)	60°C	1.04	1.0	0.91	0.82	0.71	0.58	0.41	-	-	-	-	-	-	-	-
General purpose pvc	70°C	1.03	1.0	0.94	0.87	0.79	0.71	0.61	0.50	0.35	-	-	-	-	-	-
Paper	80°C	1.02	1.0	0.95	0.89	0.84	0.77	0.71	0.63	0.55	0.45	0.32	-	-	-	-
Rubber	85°C	1.02	1.0	0.95	0.90	0.85	0.80	0.74	0.67	0.60	0.52	0.43	0.30	-	-	-
Heat resisting pvc*	90°C	1.03	1.0	0.97	0.94	0.91	0.87	0.84	0.80	0.76	0.71	0.61	0.50	0.35	-	-
Thermosetting	90°C	1.02	1.0	0.96	0.91	0.87	0.82	0.76	0.71	0.65	0.58	0.50	0.41	0.29	-	-
Mineral	70°C sheath	1.03	1.0	0.93	0.85	0.77	0.67	0.57	0.45	0.31	-	-	-	-	-	-
	105°C sheath	1.02	1.0	0.96	0.92	0.88	0.84	0.80	0.75	0.70	0.65	0.60	0.54	0.47	0.40	0.32

NOTES:

1. Correction factors for flexible cords and for 85°C or 150°C rubber-insulated flexible cables are given in the relevant table of current-carrying capacity.
2. This table also applies when determining the current-carrying capacity of a cable.
3. * These factors are applicable only to ratings in columns 2 to 5 of Table 4D1.

TABLE 4C2

Correction factors for ambient temperature where the overload protective device is a semi-enclosed fuse to BS 3036.

Type of insulation	Operating temperature	Ambient temperature (°C)														
		25	30	35	40	45	50	55	60	65	70	75	80	85	90	95
Rubber (flexible cables only)	60°C	1.04	1.0	0.96	0.91	0.87	0.79	0.56	-	-	-	-	-	-	-	-
General purpose pvc	70°C	1.03	1.0	0.97	0.94	0.91	0.87	0.84	0.69	0.48	-	-	-	-	-	-
Paper	80°C	1.02	1.0	0.97	0.95	0.92	0.90	0.87	0.84	0.76	0.62	0.43	-	-	-	-
Rubber	85°C	1.02	1.0	0.97	0.95	0.93	0.91	0.88	0.86	0.83	0.71	0.58	0.41	-	-	-
Heat resisting pvc*	90°C	1.03	1.0	0.97	0.94	0.91	0.87	0.84	0.80	0.76	0.72	0.68	0.63	0.49	-	-
Thermosetting	90°C	1.02	1.0	0.98	0.95	0.93	0.91	0.89	0.87	0.85	0.79	0.69	0.56	0.39	-	-
Mineral: bare and exposed to touch or pvc covered	70°C sheath	1.03	1.0	0.96	0.93	0.89	0.86	0.79	0.62	0.42	-	-	-	-	-	-
Bare and not exposed to touch	105°C sheath	1.02	1.0	0.98	0.96	0.93	0.91	0.89	0.86	0.84	0.82	0.79	0.77	0.64	0.55	0.43

NOTES:

1. Correction factors for flexible cords and for 85°C or 150°C rubber-insulated flexible cables are given in the relevant table of current-carrying capacity.
2. * These factors are applicable only to ratings in columns 2 to 5 of Table 4D1.

COPYRIGHT

TABLE 4D1A

Single-core pvc-insulated cables, non-armoured, with or without sheath
(COPPER CONDUCTORS)

COPPER CONDUCTORS

CURRENT-CARRYING CAPACITY (amperes):

Ambient temperature: 30°C
Conductor operating temperature: 70°C

Conductor cross-sectional area	Reference Method 4 (enclosed in conduit in thermally insulating wall etc.)		Reference Method 3 (enclosed in conduit on a wall or in trunking etc.)		Reference Method 1 (clipped direct)		Reference Method 11 (on a perforated cable tray horizontal or vertical)		Reference Method 12 (free air)		
									Horizontal flat spaced	Vertical flat spaced	Trefoil
	2 cables, single-phase a.c. or d.c.	3 or 4 cables, three-phase a.c.	2 cables, single-phase a.c. or d.c.	3 or 4 cables, three-phase a.c.	2 cables, single-phase a.c. or d.c. flat and touching	3 or 4 cables, three-phase a.c. flat and touching or trefoil	2 cables, single-phase a.c.or d.c. flat and touching	3 or 4 cables, three-phase a.c. flat and touching or trefoil	2 cables, single-phase a.c. or d.c. or 3 cables three-phase a.c.	2 cables, single-phase a.c. or d.c. or 3 cables three-phase a.c.	3 cables trefoil, three phase a.c.
1	2	3	4	5	6	7	8	9	10	11	12
(mm^2)	(A)	(A)	(A)	(A)	(A)	(A)	(A)	(A)	(A)	(A)	(A)
1	11	10.5	13.5	12	15.5	14	-	-	-	-	-
1.5	14.5	13.5	17.5	15.5	20	18	-	-	-	-	-
2.5	19.5	18	24	21	27	25	-	-	-	-	-
4	26	24	32	28	37	33	-	-	-	-	-
6	34	31	41	36	47	43	-	-	-	-	-
10	46	42	57	50	65	59	-	-	-	-	-
16	61	56	76	68	87	79	-	-	-	-	-
25	80	73	101	89	114	104	126	112	146	130	110
35	99	89	125	110	141	129	156	141	181	162	137
50	119	108	151	134	182	167	191	172	219	197	167
70	151	136	192	171	234	214	246	223	281	254	216
95	182	164	232	207	284	261	300	273	341	311	264
120	210	188	269	239	330	303	349	318	396	362	308
150	240	216	300	262	381	349	404	369	456	419	356
185	273	245	341	296	436	400	463	424	521	480	409
240	320	286	400	346	515	472	549	504	615	569	485
300	367	328	458	394	594	545	635	584	709	659	561
400	-	-	546	467	694	634	732	679	852	795	656
500	-	-	626	533	792	723	835	778	982	920	749
630	-	-	720	611	904	826	953	892	1138	1070	855
800	-	-	-	-	1030	943	1086	1020	1265	1188	971
1000	-	-	-	-	1154	1058	1216	1149	1420	1337	1079

NOTES:

1. **Where the conductor is to be protected by a semi-enclosed fuse to BS 3036, see item 6.2 of the preface to this appendix.**
2. The current-carrying capacities in columns 2 to 5 are also applicable to flexible cables to BS 6004 table 1(c) and to 90°C heat resisting pvc cables to BS 6231 tables 8 and 9 where the cables are used in fixed installations.

COPYRIGHT

TABLE 4D1B

VOLTAGE DROP (per ampere per metre): Conductor operating temperature: 70°C

Conductor cross-sectional area	2 cables d.c.	2 cables, single-phase a.c.			3 or 4 cables, three-phase a.c.			
		Reference Methods 3 & 4 (enclosed in conduit etc. in or on a wall)	Reference Methods 1 & 11 (clipped direct or on trays, touching)	Reference Method 12 (spaced*)	Reference Methods 3 & 4 (enclosed in conduit etc. in or on a wall)	Reference Methods 1, 11 & 12 (in trefoil)	Reference Methods 1 & 11 (flat and touching)	Reference Method 12 (flat spaced*)
1	2	3	4	5	6	7	8	9
(mm²)	(mV/A/m)	(mV/A/m)	(mV/A/m)	(mV/A/m)	(mV/A/m)	(mV/A/m)	(mV/A/m)	(mV/A/m)
1	44	44	44	44	38	38	38	38
1.5	29	29	29	29	25	25	25	25
2.5	18	18	18	18	15	15	15	15
4	11	11	11	11	9.5	9.5	9.5	9.5
6	7.3	7.3	7.3	7.3	6.4	6.4	6.4	6.4
10	4.4	4.4	4.4	4.4	3.8	3.8	3.8	3.8
16	2.8	2.8	2.8	2.8	2.4	2.4	2.4	2.4
		r x z	r x z	r x z	r x z	r x z	r x z	r x z
25	1.75	1.80 0.33 1.80	1.75 0.20 1.75	1.75 0.29 1.80	1.50 0.29 1.55	1.50 0.175 1.50	1.50 0.25 1.55	1.50 0.32 1.55
35	1.25	1.30 0.31 1.30	1.25 0.195 1.25	1.25 0.28 1.30	1.10 0.27 1.10	1.10 0.170 1.10	1.10 0.24 1.10	1.10 0.32 1.15
50	0.93	0.95 0.30 1.00	0.93 0.190 0.95	0.93 0.28 0.97	0.81 0.26 0.85	0.80 0.165 0.82	0.80 0.24 0.84	0.80 0.32 0.86
70	0.63	0.65 0.29 0.72	0.63 0.185 0.66	0.63 0.27 0.69	0.56 0.25 0.61	0.55 0.160 0.57	0.55 0.24 0.60	0.55 0.31 0.63
95	0.46	0.49 0.28 0.56	0.47 0.180 0.50	0.47 0.27 0.54	0.42 0.24 0.48	0.41 0.155 0.43	0.41 0.23 0.47	0.40 0.31 0.51
120	0.36	0.39 0.27 0.47	0.37 0.175 0.41	0.37 0.26 0.45	0.33 0.23 0.41	0.32 0.150 0.36	0.32 0.23 0.40	0.32 0.30 0.44
150	0.29	0.31 0.27 0.41	0.30 0.175 0.34	0.29 0.26 0.39	0.27 0.23 0.36	0.26 0.150 0.30	0.26 0.23 0.34	0.26 0.30 0.40
185	0.23	0.25 0.27 0.37	0.24 0.170 0.29	0.24 0.26 0.35	0.22 0.23 0.32	0.21 0.145 0.26	0.21 0.22 0.31	0.21 0.30 0.36
240	0.180	0.195 0.26 0.33	0.185 0.165 0.25	0.185 0.25 0.31	0.17 0.23 0.29	0.160 0.145 0.22	0.160 0.22 0.27	0.160 0.29 0.34
300	0.145	0.160 0.26 0.31	0.150 0.165 0.22	0.150 0.25 0.29	0.14 0.23 0.27	0.130 0.140 0.190	0.130 0.22 0.25	0.130 0.29 0.32
400	0.105	0.130 0.26 0.29	0.120 0.160 0.20	0.115 0.25 0.27	0.12 0.22 0.25	0.105 0.140 0.175	0.105 0.21 0.24	0.100 0.29 0.31
500	0.086	0.110 0.26 0.28	0.098 0.155 0.185	0.093 0.24 0.26	0.10 0.22 0.25	0.086 0.135 0.160	0.086 0.21 0.23	0.081 0.29 0.30
630	0.068	0.094 0.25 0.27	0.081 0.155 0.175	0.076 0.24 0.25	0.08 0.22 0.24	0.072 0.135 0.150	0.072 0.21 0.22	0.066 0.28 0.29
800	0.053	-	0.068 0.150 0.165	0.061 0.24 0.25	-	0.060 0.130 0.145	0.060 0.21 0.22	0.053 0.28 0.29
1000	0.042	-	0.059 0.150 0.160	0.050 0.24 0.24	-	0.052 0.130 0.140	0.052 0.20 0.21	0.044 0.28 0.28

NOTE: * Spacings larger than those specified in Method 12 (see table 4A) will result in larger voltage drop.

COPYRIGHT

TABLE 4D2A

Multicore pvc-insulated cables, non-armoured
(COPPER CONDUCTORS)

COPPER CONDUCTORS

Ambient temperature: 30°C
Conductor operating temperature: 70°C

CURRENT-CARRYING CAPACITY (amperes):

Conductor cross-sectional area	Reference Method 4 (enclosed in an insulated wall, etc.)		Reference Method 3 (enclosed in conduit on a wall or ceiling, or in trunking)		Reference Method 1 (clipped direct)		Reference Method 11 (on a perforated cable tray) or Reference Method 13 (free air)	
	1 two-core cable*, single-phase a.c. or d.c.	1 three-core cable* or 1 four-core cable, three-phase a.c.	1 two-core cable*, single-phase a.c. or d.c.	1 three-core cable* or 1 four-core cable, three-phase a.c.	1 two-core cable*, single-phase a.c. or d.c.	1 three-core cable* or 1 four-core cable, three-phase a.c.	1 two-core cable*, single-phase a.c. or d.c.	1 three-core cable* or 1 four-core cable, three-phase a.c.
1	2	3	4	5	6	7	8	9
(mm²)	(A)	(A)	(A)	(A)	(A)	(A)	(A)	(A)
1	11	10	13	11.5	15	13.5	17	14.5
1.5	14	13	16.5	15	19.5	17.5	22	18.5
2.5	18.5	17.5	23	20	27	24	30	25
4	25	23	30	27	36	32	40	34
6	32	29	38	34	46	41	51	43
10	43	39	52	46	63	57	70	60
16	57	52	69	62	85	76	94	80
25	75	68	90	80	112	96	119	101
35	92	83	111	99	138	119	148	126
50	110	99	133	118	168	144	180	153
70	139	125	168	149	213	184	232	196
95	167	150	201	179	258	223	282	238
120	192	172	232	206	299	259	328	276
150	219	196	258	225	344	299	379	319
185	248	223	294	255	392	341	434	364
240	291	261	344	297	461	403	514	430
300	334	298	394	339	530	464	593	497
400	-	-	470	402	634	557	715	597

NOTES:

1. **Where the conductor is to be protected by a semi-enclosed fuse to BS 3036, see item 6.2 of the preface to this appendix.**
2. Circular conductors are assumed for sizes up to and including 16 mm². Values for larger sizes relate to shaped conductors and may safely be applied to circular conductors.
3. Cables to BS 7629 are rated for a conductor operating temperature of 70°C and are therefore included in this table, although the material used for the cable insulation is not pvc.
4. * With or without a protective conductor.

COPYRIGHT

TABLE 4D2B

VOLTAGE DROP (per ampere per metre): Conductor operating temperature: 70°C

Conductor cross-sectional area	Two-core cable, d.c.	Two-core cable, single-phase a.c.			Three- or four-core cable, three-phase a.c.		
1	2	3			4		
(mm²)	(mV/A/m)	(mV/A/m)			(mV/A/m)		
1	44	44			38		
1.5	29	29			25		
2.5	18	18			15		
4	11	11			9.5		
6	7.3	7.3			6.4		
10	4.4	4.4			3.8		
16	2.8	2.8			2.4		
		r	x	z	r	x	z
25	1.75	1.75	0.170	1.75	1.50	0.145	1.50
35	1.25	1.25	0.165	1.25	1.10	0.145	1.10
50	0.93	0.93	0.165	0.94	0.80	0.140	0.81
70	0.63	0.63	0.160	0.65	0.55	0.140	0.57
95	0.46	0.47	0.155	0.50	0.41	0.135	0.43
120	0.36	0.38	0.155	0.41	0.33	0.135	0.35
150	0.29	0.30	0.155	0.34	0.26	0.130	0.29
185	0.23	0.25	0.150	0.29	0.21	0.130	0.25
240	0.180	0.190	0.150	0.24	0.165	0.130	0.21
300	0.145	0.155	0.145	0.21	0.135	0.130	0.185
400	0.105	0.115	0.145	0.185	0.100	0.125	0.160

COPYRIGHT

COPPER CONDUCTORS

TABLE 4D3A

Single-core armoured pvc-insulated cables
(non-magnetic armour)
(COPPER CONDUCTORS)

CURRENT-CARRYING CAPACITY (amperes):

Ambient temperature: 30°C
Conductor operating temperature: 70°C

	Reference Method 1 (clipped direct)		Reference Method 11 (on perforated cable tray)		Reference Method 12 (free air)						
					2 cables, single-phase a.c.		2 cables, d.c.		3 or 4 cables, three-phase a.c.		
Conductor cross-sectional area	2 cables, single-phase a.c. or d.c. flat and touching	3 or 4 cables, three-phase a.c. flat and touching	2 cables, single-phase a.c. or d.c. flat and touching	3 or 4 cables, three-phase a.c. flat and touching	Horizontal flat spaced	Vertical flat spaced	Horizontal spaced	Vertical spaced	Horizontal flat spaced	Vertical flat spaced	3 cables trefoil
1	2	3	4	5	6	7	8	9	10	11	12
(mm²)	(A)	(A)	(A)	(A)	(A)	(A)	(A)	(A)	(A)	(A)	(A)
50	193	179	205	189	229	217	229	216	230	212	181
70	245	225	259	238	287	272	294	279	286	263	231
95	296	269	313	285	349	332	357	340	338	313	280
120	342	309	360	327	401	383	415	396	385	357	324
185	447	399	469	422	511	489	548	525	490	456	425
240	525	465	550	492	593	568	648	622	566	528	501
300	594	515	624	547	668	640	748	719	616	578	567
400	687	575	723	618	737	707	885	851	674	632	657
500	763	622	805	673	810	777	1035	997	721	676	731
630	843	669	891	728	893	856	1218	1174	771	723	809
800	919	710	976	777	943	905	1441	1390	824	772	886
1000	975	737	1041	808	1008	967	1685	1627	872	816	945

NOTE:
Where the conductor is to be protected by a semi-enclosed fuse to BS 3036, see item 6.2 of the preface to this appendix.

COPYRIGHT

TABLE 4D3B

VOLTAGE DROP (per ampere per metre): Conductor operating temperature: 70°C

Conductor cross-sectional area	2 cables d.c.	2 cables, single-phase a.c.						3 or 4 cables, three-phase a.c.								
		Reference Methods 1 & 11 (touching)			Reference Method 12 (spaced*)			Reference Methods 1, 11 and 12 (in trefoil touching)			Reference Methods 1 & 11 (flat and touching)			Reference Method 12 (flat spaced*)		
1	2	3			4			5			6			7		
(mm²)	(mV/A/m)	(mV/A/m)			(mV/A/m)			(mV/A/m)			(mV/A/m)			(mV/A/m)		
		r	x	z	r	x	z	r	x	z	r	x	z	r	x	z
50	0.93	0.93	0.22	0.95	0.92	0.30	0.97	0.80	0.190	0.82	0.79	0.26	0.84	0.79	0.34	0.86
70	0.63	0.64	0.21	0.68	0.66	0.29	0.72	0.56	0.180	0.58	0.57	0.25	0.62	0.59	0.32	0.68
95	0.46	0.48	0.20	0.52	0.51	0.28	0.58	0.42	0.175	0.45	0.44	0.25	0.50	0.47	0.31	0.57
120	0.36	0.39	0.195	0.43	0.42	0.28	0.50	0.33	0.170	0.37	0.36	0.24	0.43	0.40	0.30	0.50
150	0.29	0.31	0.190	0.37	0.34	0.27	0.44	0.27	0.165	0.32	0.30	0.24	0.38	0.34	0.30	0.45
185	0.23	0.26	0.190	0.32	0.29	0.27	0.39	0.22	0.160	0.27	0.25	0.23	0.34	0.29	0.29	0.41
240	0.180	0.20	0.180	0.27	0.23	0.26	0.35	0.175	0.160	0.23	0.20	0.23	0.30	0.24	0.28	0.37
300	0.145	0.160	0.180	0.24	0.190	0.26	0.32	0.140	0.155	0.21	0.165	0.22	0.28	0.20	0.28	0.34
400	0.105	0.140	0.175	0.22	0.180	0.24	0.30	0.120	0.130	0.195	0.160	0.21	0.26	0.21	0.25	0.32
500	0.086	0.120	0.170	0.21	0.165	0.23	0.29	0.105	0.145	0.180	0.145	0.20	0.25	0.190	0.24	0.30
630	0.068	0.105	0.165	0.195	0.150	0.22	0.27	0.091	0.145	0.170	0.135	0.195	0.23	0.175	0.22	0.28
800	0.053	0.095	0.160	0.185	0.145	0.21	0.25	0.082	0.140	0.160	0.125	0.180	0.22	0.170	0.195	0.26
1000	0.042	0.091	0.155	0.180	0.140	0.190	0.24	0.079	0.135	0.155	0.125	0.165	0.21	0.165	0.170	0.24

NOTE: * Spacings larger than those specified in Method 12 (see table 4A) will result in larger voltage drop.

COPYRIGHT

COPPER CONDUCTORS

TABLE 4D4A

Multicore armoured pvc-insulated cables
(COPPER CONDUCTORS)

CURRENT-CARRYING CAPACITY (amperes): Ambient temperature: 30°C
Conductor operating temperature: 70°C

Conductor cross-sectional area	Reference Method 1 (clipped direct)		Reference Method 11 (on a perforated horizontal or vertical cable tray) or Reference Method 13 (free air)	
	1 two-core cable, single-phase a.c. or d.c.	1 three- or four-core cable, three-phase a.c.	1 two-core cable, single-phase a.c. or d.c.	1 three- or four-core cable, three-phase a.c.
1	2	3	4	5
(mm^2)	(A)	(A)	(A)	(A)
1.5	21	18	22	19
2.5	28	25	31	26
4	38	33	41	35
6	49	42	53	45
10	67	58	72	62
16	89	77	97	83
25	118	102	128	110
35	145	125	157	135
50	175	151	190	163
70	222	192	241	207
95	269	231	291	251
120	310	267	336	290
150	356	306	386	332
185	405	348	439	378
240	476	409	516	445
300	547	469	592	510
400	621	540	683	590

NOTE:
Where the conductor is to be protected by a semi-enclosed fuse to BS 3036, see item 6.2 of the preface to this appendix.

COPYRIGHT

TABLE 4D4B

VOLTAGE DROP (per ampere per metre): Conductor operating temperature: 70°C

Conductor cross-sectional area	Two-core cable, d.c.	Two-core cable, single-phase a.c.			Three- or four-core cable, three-phase a.c.		
1	2	3			4		
(mm²)	(mV/A/m)	(mV/A/m)			(mV/A/m)		
1.5	29	29			25		
2.5	18	18			15		
4	11	11			9.5		
6	7.3	7.3			6.4		
10	4.4	4.4			3.8		
16	2.8	2.8			2.4		
		r	x	z	r	x	z
25	1.75	1.75	0.170	1.75	1.50	0.145	1.50
35	1.25	1.25	0.165	1.25	1.10	0.145	1.10
50	0.93	0.93	0.165	0.94	0.80	0.140	0.81
70	0.63	0.63	0.160	0.65	0.55	0.140	0.57
95	0.46	0.47	0.155	0.50	0.41	0.135	0.43
120	0.36	0.38	0.155	0.41	0.33	0.135	0.35
150	0.29	0.30	0.155	0.34	0.26	0.130	0.29
185	0.23	0.25	0.150	0.29	0.21	0.130	0.25
240	0.180	0.190	0.150	0.24	0.165	0.130	0.21
300	0.145	0.155	0.145	0.21	0.135	0.130	0.185
400	0.105	0.115	0.145	0.185	0.100	0.125	0.160

COPYRIGHT

TABLE 4E1A

Single-core cables having thermosetting insulation, non-armoured, with or without sheath
(COPPER CONDUCTORS)

COPPER CONDUCTORS

CURRENT-CARRYING CAPACITY (amperes):

Ambient temperature: 30°C
Conductor operating temperature: 90°C

Conductor cross-sectional area	Reference Method 4 (enclosed in conduit in thermally insulating wall etc.)		Reference Method 3 (enclosed in conduit on a wall or in trunking etc.)		Reference Method 1 (clipped direct)		Reference Method 11 (on a perforated cable tray horizontal or vertical		Reference Method 12 (free air)		
									Horizontal flat spaced	Vertical flat spaced	Trefoil
	2 cables, single-phase a.c. or d.c.	3 or 4 cables, three-phase a.c.	2 cables, single-phase a.c. or d.c.	3 or 4 cables, three-phase a.c.	2 cables, single-phase a.c. or d.c. flat and touching	3 or 4 cables, three-phase a.c. flat and touching or trefoil	2 cables, single-phase a.c. or d.c. flat and touching	3 or 4 cables, three-phase a.c. flat and touching or trefoil	2 cables, single-phase a.c. or d.c. or 3 cables three-phase	2 cables, single-phase a.c. or d.c. or 3 cables three-phase	3 cables trefoil, three phase a.c.
1	2	3	4	5	6	7	8	9	10	11	12
(mm²)	(A)	(A)	(A)	(A)	(A)	(A)	(A)	(A)	(A)	(A)	(A)
1	14	13	17	15	19	17.5	-	-	-	-	-
1.5	18	17	22	19	25	23	-	-	-	-	-
2.5	24	23	30	26	34	31	-	-	-	-	-
4	33	30	40	35	46	41	-	-	-	-	-
6	43	39	51	45	59	54	-	-	-	-	-
10	58	53	71	63	81	74	-	-	-	-	-
16	76	70	95	85	109	99	-	-	-	-	-
25	100	91	126	111	143	130	158	140	183	163	138
35	124	111	156	138	176	161	195	176	226	203	171
50	149	135	189	168	228	209	293	215	274	246	209
70	189	170	240	214	293	268	308	279	351	318	270
95	228	205	290	259	355	326	375	341	426	389	330
120	263	235	336	299	413	379	436	398	495	453	385
150	300	270	375	328	476	436	505	461	570	524	445
185	341	306	426	370	545	500	579	530	651	600	511
240	400	358	500	433	644	590	686	630	769	711	606
300	459	410	573	493	743	681	794	730	886	824	701
400	-	-	683	584	868	793	915	849	1065	994	820
500	-	-	783	666	990	904	1044	973	1228	1150	936
630	-	-	900	764	1130	1033	1191	1115	1423	1338	1069
800	-	-	-	-	1288	1179	1358	1275	1581	1485	1214
1000	-	-	-	-	1443	1323	1520	1436	1775	1671	1349

NOTES:

1. **Where the conductor is to be protected by a semi-enclosed fuse to BS 3036, see item 6.2 of the preface to this appendix.**
2. The current-carrying capacities in columns 2 to 5 are also applicable to flexible cables to BS 7211 table 3(b) where the cables are used in fixed installations.
3. For cable in rigid pvc conduit the values stated in table 4D1 are applicable.
4. Where a conductor operates at a temperature exceeding 70°C it shall be ascertained that the equipment connected to the conductor is suitable for the conductor operating temperature.
5. Where cables in this table are connected to equipment or accessories designed to operate at a temperature not exceeding 70°C, the current ratings given in the equivalent table for 70°C pvc insulated cables (BS 6004, BS 6346) shall be used.

COPYRIGHT

TABLE 4E1B

VOLTAGE DROP (per ampere per metre): Conductor operating temperature: 90°C

Conductor cross-sectional area	2 cables, d.c.	2 cables, single-phase a.c.			3 or 4 cables, three-phase a.c.			
		Reference Methods 3 & 4 (enclosed in conduit etc. in or on a wall)	Reference Methods 1 & 11 (clipped direct or on trays, touching)	Reference Method 12 (spaced*)	Reference Methods 3 & 4 (enclosed in conduit etc. in or on a wall)	Reference Methods 1, 11 & 12 (in trefoil)	Reference Methods 1 & 11 (flat and touching)	Reference Method 12 (flat spaced*)
1	2	3	4	5	6	7	8	9
(mm²)	(mV/A/m)	(mV/A/m)	(mV/A/m)	(mV/A/m)	(mV/A/m)	(mV/A/m)	(mV/A/m)	(mV/A/m)
1	46	46	46	46	40	40	40	40
1.5	31	31	31	31	27	27	27	27
2.5	19	19	19	19	16	16	16	16
4	12	12	12	12	10	10	10	10
6	7.9	7.9	7.9	7.9	6.8	6.8	6.8	6.8
10	4.7	4.7	4.7	4.7	4.0	4.0	4.0	4.0
16	2.9	2.9	2.9	2.9	2.5	2.5	2.5	2.5
		r x z	r x z	r x z	r x z	r x z	r x z	r x z
25	1.85	1.85 0.31 1.90	1.85 0.190 1.85	1.85 0.28 1.85	1.60 0.27 1.65	1.60 0.165 1.60	1.60 0.190 1.60	1.60 0.27 1.65
35	1.35	1.35 0.29 1.35	1.35 0.180 1.35	1.35 0.27 1.35	1.15 0.25 1.15	1.15 0.155 1.15	1.15 0.180 1.15	1.15 0.26 1.20
50	0.99	1.00 0.29 1.05	0.99 0.180 1.00	0.99 0.27 1.00	0.87 0.25 0.90	0.86 0.155 0.87	0.86 0.180 0.87	0.86 0.26 0.89
70	0.68	0.70 0.28 0.75	0.68 0.175 0.71	0.68 0.26 0.73	0.60 0.24 0.65	0.59 0.150 0.61	0.59 0.175 0.62	0.59 0.25 0.65
95	0.49	0.51 0.27 0.58	0.49 0.170 0.52	0.49 0.26 0.56	0.44 0.23 0.50	0.43 0.145 0.45	0.43 0.170 0.46	0.43 0.25 0.49
120	0.39	0.41 0.26 0.48	0.39 0.165 0.43	0.39 0.25 0.47	0.35 0.23 0.42	0.34 0.140 0.37	0.34 0.165 0.38	0.34 0.24 0.42
150	0.32	0.33 0.26 0.43	0.32 0.165 0.36	0.32 0.25 0.41	0.29 0.23 0.37	0.28 0.140 0.31	0.28 0.165 0.32	0.28 0.24 0.37
185	0.25	0.27 0.26 0.37	0.26 0.165 0.30	0.25 0.25 0.36	0.23 0.23 0.32	0.22 0.140 0.26	0.22 0.165 0.28	0.22 0.24 0.33
240	0.190	0.21 0.26 0.33	0.20 0.160 0.25	0.195 0.25 0.31	0.185 0.22 0.29	0.170 0.140 0.22	0.170 0.165 0.24	0.170 0.24 0.29
300	0.155	0.175 0.25 0.31	0.160 0.160 0.22	0.155 0.25 0.29	0.150 0.22 0.27	0.140 0.140 0.195	0.135 0.160 0.21	0.135 0.24 0.27
400	0.120	0.140 0.25 0.29	0.130 0.155 0.20	0.125 0.24 0.27	0,125 0.22 0.25	0.110 0.135 0.175	0.110 0.160 0.195	0.110 0.24 0.26
500	0.093	0.120 0.25 0.28	0.105 0.155 0.185	0.098 0.24 0.26	0.100 0.22 0.24	0.090 0.135 0.160	0.088 0.160 0.180	0.085 0.24 0.25
630	0.072	0.100 0.25 0.27	0.086 0.155 0.175	0.078 0.24 0.25	0.088 0.21 0.23	0.074 0.135 0.150	0.071 0.160 0.170	0.068 0.23 0.24
800	0.056	-	0.072 0.150 0.170	0.064 0.24 0.25	-	0.062 0.130 0.145	0.059 0.155 0.165	0.055 0.23 0.24
1000	0.045	-	0.063 0.150 0.165	0.054 0.24 0.24	-	0.055 0.130 0.140	0.050 0.155 0.165	0.047 0.23 0.24

NOTE: * Spacings larger than those specified in Method 12 (see table 4A) will result in larger voltage drop.

COPYRIGHT

COPPER CONDUCTORS

TABLE 4E2A

Multicore cable having thermosetting insulation, non armoured
(COPPER CONDUCTORS)

CURRENT-CARRYING CAPACITY (amperes):

Ambient temperature: 30°C
Conductor operating temperature: 90°C

Conductor cross-sectional area	Reference Method 4 (enclosed in an insulated wall, etc.)		Reference Method 3 (enclosed in conduit on a wall or ceiling, or in trunking)		Reference Method 1 (clipped direct)		Reference Method 11 (on a perforated cable tray) or Reference Method 13 (free air)	
	1 two-core cable*, single-phase a.c. or d.c.	1 three- or four-core cable*, three-phase a.c.	1 two-core cable*, single-phase a.c. or d.c.	1 three- or four-core cable*, three-phase a.c.	1 two-core cable*, single-phase a.c. or d.c.	1 three- or four-core cable*, three-phase a.c.	1 two-core cable*, single-phase a.c. or d.c.	1 three- or four-core cable*, three-phase a.c.
1	2	3	4	5	6	7	8	9
(mm²)	(A)	(A)	(A)	(A)	(A)	(A)	(A)	(A)
1	14.5	13	17	15	19	17	21	18
1.5	18.5	16.5	22	19.5	24	22	26	23
2.5	25	22	30	26	33	30	36	32
4	33	30	40	35	45	40	49	42
6	42	38	51	44	58	52	63	54
10	57	51	69	60	80	71	86	75
16	76	68	91	80	107	96	115	100
25	99	89	119	105	138	119	149	127
35	121	109	146	128	171	147	185	158
50	145	130	175	154	209	179	225	192
70	183	164	221	194	269	229	289	246
95	220	197	265	233	328	278	352	298
120	253	227	305	268	382	322	410	346
150	290	259	334	300	441	371	473	399
185	329	295	384	340	506	424	542	456
240	386	346	459	398	599	500	641	538
300	442	396	532	455	693	576	741	621
400	-	-	625	536	803	667	865	741

NOTES:

1. **Where the conductor is to be protected by a semi-enclosed fuse to BS 3036, see item 6.2 of the preface to this appendix.**
2. Where a conductor operates at a temperature exceeding 70°C it shall be ascertained that the equipment connected to the conductor is suitable for the conductor operating temperature (see Regulation 512-02).
3. * With or without a protective conductor.
4. For cables in rigid pvc conduit the values stated in table 4D2 are applicable (see Regulation 521-05).
5. Where cables in this table are connected to equipment or accessories designed to operate at a temperature not exceeding 70°C, the current ratings given in the equivalent table for 70°C pvc insulated cables (BS 6004, BS 6346) shall be used (see also Regulation 523-01-01).
6. Circular conductors are assumed for sizes up to and including 16 mm². Values for larger sizes relate to shaped conductors and may safely be applied to circular conductors.

COPYRIGHT

TABLE 4E2B

VOLTAGE DROP (per ampere per metre): Conductor operating temperature: 90°C

Conductor cross-sectional area	Two-core cable, d.c.	Two-core cable, single-phase a.c.			Three- or four-core cable, three-phase a.c.		
1	2	3			4		
(mm^2)	(mV/A/m)	(mV/A/m)			(mV/A/m)		
1	46	46			40		
1.5	31	31			27		
2.5	19	19			16		
4	12	12			10		
6	7.9	7.9			6.8		
10	4.7	4.7			4.0		
16	2.9	2.9			2.5		
		r	x	z	r	x	z
25	1.85	1.85	0.160	1.90	1.60	0.140	1.65
35	1.35	1.35	0.155	1.35	1.15	0.135	1.15
50	0.98	0.99	0.155	1.00	0.86	0.135	0.87
70	0.67	0.67	0.150	0.69	0.59	0.130	0.60
95	0.49	0.50	0.150	0.52	0.43	0.130	0.45
120	0.39	0.40	0.145	0.42	0.34	0.130	0.37
150	0.31	0.32	0.145	0.35	0.28	0.125	0.30
185	0.25	0.26	0.145	0.29	0.22	0.125	0.26
240	0.195	0.200	0.140	0.24	0.175	0.125	0.21
300	0.155	0.160	0.140	0.21	0.140	0.120	0.185
400	0.120	0.130	0.140	0.190	0.115	0.120	0.165

COPYRIGHT

COPPER CONDUCTORS

TABLE 4E3A

Single-core cables having thermosetting insulation (non-magnetic armour)
(COPPER CONDUCTORS)

CURRENT-CARRYING CAPACITY (amperes):

Ambient temperature: 30°C
Conductor operating temperature: 90°C

	Reference Method 1 (clipped direct)		Reference Method 11 (on perforated cable tray)		Reference Method 12 (free air)						
					2 cables, single-phase a.c.		2 cables, d.c.		3 or 4 cables, three-phase a.c.		
Conductor cross-sectional area	2 cables, single-phase a.c. or d.c. flat and touching	3 or 4 cables, three-phase a.c. flat and touching	2 cables, single-phase a.c. or d.c. flat and touching	3 or 4 cables, three-phase a.c. flat and touching	Horizontal flat spaced	Vertical flat spaced	Horizontal spaced	Vertical spaced	Horizontal flat spaced	Vertical flat spaced	3 cables trefoil
1	2	3	4	5	6	7	8	9	10	11	12
(mm²)	(A)	(A)	(A)	(A)	(A)	(A)	(A)	(A)	(A)	(A)	(A)
50	237	220	253	232	282	266	284	270	288	266	222
70	303	277	322	293	357	337	356	349	358	331	285
95	367	333	389	352	436	412	446	426	425	393	346
120	425	383	449	405	504	477	519	497	485	449	402
150	488	437	516	462	566	539	600	575	549	510	463
185	557	496	587	524	643	614	688	660	618	574	529
240	656	579	689	612	749	714	815	782	715	666	625
300	755	662	792	700	842	805	943	906	810	755	720
400	853	717	899	767	929	889	1137	1094	848	797	815
500	962	791	1016	851	1032	989	1314	1266	923	871	918
630	1082	861	1146	935	1139	1092	1528	1474	992	940	1027
800	1170	904	1246	987	1204	1155	1809	1744	1042	978	1119
1000	1261	961	1345	1055	1289	1238	2100	2026	1110	1041	1214

NOTES:

1. **Where the conductor is to be protected by a semi-enclosed fuse to BS 3036, see item 6.2 of the preface to this appendix.**
2. Where a conductor operates at a temperature exceeding 70°C it shall be ascertained that the equipment connected to the conductor is suitable for the conductor operating temperature.
3. Where cables in this table are connected to equipment or accessories desinged to operate at a temperature not exceeding 70°C, the current ratings given in the equivalent table for 70°C pvc insulated cables (BS 6004, BS 6346) shall be used.

COPYRIGHT

TABLE 4E3B

VOLTAGE DROP (per ampere per metre): Conductor operating temperature: 90°C

Conductor cross-sectional area	2 cables, d.c.	2 cables, single-phase a.c.						3 or 4 cables, three-phase a.c.								
		Reference Methods 1 & 11 (touching)			Reference Method 12 (spaced*)			Reference Methods 1, 11 & 12 (in trefoil touching)			Reference Methods 1 & 11 flat and touching)			Reference Method 12 (flat spaced*)		
1	2	3			4			5			6			7		
(mm²)	(mV/A/m)	(mV/A/m)			(mV/A/m)			(mV/A/m)			(mV/A/m)			(mV/A/m)		
		r	x	z	r	x	z	r	x	z	r	x	z	r	x	z
50	0.98	0.99	0.21	1.00	0.98	0.29	1.00	0.86	0.180	0.87	0.84	0.25	0.88	0.84	0.33	0.90
70	0.67	0.68	0.200	0.71	0.69	0.29	0.75	0.59	0.170	0.62	0.60	0.25	0.65	0.62	0.32	0.70
95	0.49	0.51	0.195	0.55	0.53	0.28	0.60	0.44	0.170	0.47	0.46	0.24	0.52	0.49	0.31	0.58
120	0.39	0.41	0.190	0.45	0.43	0.27	0.51	0.35	0.165	0.39	0.38	0.24	0.44	0.41	0.30	0.51
150	0.31	0.33	0.185	0.38	0.36	0.27	0.45	0.29	0.160	0.33	0.31	0.23	0.39	0.34	0.29	0.45
185	0.25	0.27	0.185	0.33	0.30	0.26	0.40	0.23	0.160	0.28	0.26	0.23	0.34	0.29	0.29	0.41
240	0.195	0.21	0.180	0.28	0.24	0.26	0.35	0.180	0.155	0.24	0.21	0.22	0.30	0.24	0.28	0.37
300	0.155	0.170	0.175	0.25	0.195	0.25	0.32	0.145	0.150	0.21	0.170	0.22	0.28	0.20	0.27	0.34
400	0.115	0.145	0.170	0.22	0.180	0.24	0.30	0.125	0.150	0.195	0.160	0.21	0.27	0.20	0.27	0.33
500	0.093	0.125	0.170	0.21	0.165	0.24	0.29	0.105	0.145	0.180	0.145	0.20	0.25	0.190	0.24	0.31
630	0.073	0.105	0.165	0.195	0.150	0.23	0.27	0.092	0.145	0.170	0.135	0.195	0.24	0.175	0.23	0.29
800	0.056	0.090	0.160	0.190	0.145	0.23	0.27	0.086	0.140	0.165	0.130	0.180	0.23	0.175	0.195	0.26
1000	0.045	0.092	0.155	0.180	0.140	0.21	0.25	0.080	0.135	0.155	0.125	0.170	0.21	0.165	0.180	0.24

NOTE: * Spacings larger than those specified in Method 12 (see table 4A) will result in a larger voltage drop.

COPYRIGHT

COPPER CONDUCTORS

TABLE 4E4A
Multicore armoured cables having thermosetting insulation
(COPPER CONDUCTORS)

CURRENT-CARRYING CAPACITY (amperes): Ambient temperature: 30°C
Conductor operating temperature: 90°C

Conductor cross-sectional area	Reference Method 1 (clipped direct)		Reference Method 11 (on a perforated horizontal or vertical cable tray) or Reference Method 13 (free air)	
	1 two-core cable, single-phase a.c. or d.c.	1 three- or four-core cable, three-phase a.c.	1 two-core cable, single-phase a.c. or d.c.	1 three- or four-core cable, three-phase a.c.
1	2	3	4	5
(mm²)	(A)	(A)	(A)	(A)
1.5	27	23	29	25
2.5	36	31	39	33
4	49	42	52	44
6	62	53	66	56
10	85	73	90	78
16	110	94	115	99
25	146	124	152	131
35	180	154	188	162
50	219	187	228	197
70	279	238	291	251
95	338	289	354	304
120	392	335	410	353
150	451	386	472	406
185	515	441	539	463
240	607	520	636	546
300	698	599	732	628
400	787	673	847	728

NOTES:

1. **Where the conductor is to be protected by a semi-enclosed fuse to BS 3036, see item 6.2 of the preface to this appendix.**
2. Where a conductor operates at a temperature exceeding 70°C it shall be ascertained that the equipment connected to the conductor is suitable for the conductor operating temperature
3. Where cables in this table are connected to equipment or accessories designed to operate at a temperature not exceeding 70°C, the current ratings given in the equivalent table for 70°C pvc insulated cables (BS 6004, BS 6346) shall be used.

COPYRIGHT

TABLE 4E4B

VOLTAGE DROP (per ampere per metre): Conductor operating temperature: 90°C

Conductor cross-sectional area	Two-core cable, d.c.	Two-core cable, single-phase a.c.			Three- or four-core cable, three-phase a.c.		
1	2	3			4		
(mm^2)	(mV/A/m)	(mV/A/m)			(mV/A/m)		
1.5	31	31			27		
2.5	19	19			16		
4	12	12			10		
6	7.9	7.9			6.8		
10	4.7	4.7			4.0		
16	2.9	2.9			2.5		
		r	x	z	r	x	z
25	1.85	1.85	0.160	1.90	1.60	0.140	1.65
35	1.35	1.35	0.155	1.35	1.15	0.135	1.15
50	0.98	0.99	0.155	1.00	0.86	0.135	0.87
70	0.67	0.67	0.150	0.69	0.59	0.130	0.60
95	0.49	0.50	0.150	0.52	0.43	0.130	0.45
120	0.39	0.40	0.145	0.42	0.34	0.130	0.37
150	0.31	0.32	0.145	0.35	0.28	0.125	0.30
185	0.25	0.26	0.145	0.29	0.22	0.125	0.26
240	0.195	0.20	0.140	0.24	0.175	0.125	0.21
300	0.155	0.16	0.140	0.21	0.140	0.120	0.185
400	0.120	0.13	0.140	0.190	0.115	0.120	0.165

COPYRIGHT

TABLE 4F1A

Single-core non-armoured cables having 85°C rubber insulation (COPPER CONDUCTORS)

COPPER CONDUCTORS

CURRENT-CARRYING CAPACITY (amperes): Ambient temperature: 30°C; Conductor operating temperature: 85°C

Conductor cross-sectional area	Reference Method 3 (enclosed in conduit etc. in or on a wall)		Reference Method 1 (clipped direct)		Reference Method 11 (on a perforated cable tray) Horizontal or Vertical		Reference Method 12 (free air)	
	2 cables, single-phase a.c. or d.c.	3 or 4 cables, three-phase a.c.	2 cables, single-phase a.c. or d.c. flat and touching	3 or 4 cables, three-phase a.c. flat and touching or trefoil	2 cables, single-phase a.c. or d.c. flat and touching	3 or 4 cables, three-phase a.c. flat and touching or trefoil	2 cables, single-phase a.c. or d.c. or 3 or 4 cables, three-phase a.c. flat spaced horizontal or vertical	3 cables trefoil, three-phase a.c.
1	2	3	4	5	6	7	8	9
(mm²)	(A)	(A)	(A)	(A)	(A)	(A)	(A)	(A)
1	17	15	19	17.5	-	-	-	-
1.5	22	19.5	25	23	-	-	-	-
2.5	30	27	34	31	-	-	-	-
4	40	36	45	42	-	-	-	-
6	52	46	59	54	-	-	-	-
10	72	63	81	75	-	-	-	-
16	96	85	108	100	-	-	-	-
25	127	112	143	133	153	140	154	134
35	157	138	177	164	189	174	192	167
50	190	167	215	199	229	211	235	204
70	242	213	274	254	293	269	303	262
95	293	258	332	308	356	327	370	320
120	339	298	384	357	412	379	431	373
150	372	334	442	411	475	437	499	432
185	428	379	519	469	542	499	573	495
240	510	443	607	553	639	589	679	587
300	593	506	695	636	735	679	786	680
400	719	602	827	755	860	798	929	799
500	835	689	946	865	989	918	1081	919
630	975	791	1088	996	1143	1062	1263	1060

NOTES:

1. **Where the conductor is to be protected by a semi-enclosed fuse to BS 3036, see item 6.2 of the preface to this appendix.**
2. Where a conductor operates at a temperature exceeding 70°C it shall be ascertained that the equipment connected to the conductor is suitable for the conductor operating temperature.
3. For cables in rigid pvc conduit the values stated in table 4D1 are applicable.
4. Where cables in this table are connected to equipment or accessories designed to operate at a temperature not exceeding 70°C, the current ratings given in the equivalent table for 70°C pvc insulated cables (BS 6004, BS 6346) shall be used.

COPYRIGHT

TABLE 4F1B

VOLTAGE DROP (per ampere per metre): Conductor operating temperature: 85°C

Conductor cross-sectional area	2 cables, d.c.	2 cables, single-phase a.c.			3 or 4 cables, three-phase a.c.			
		Reference Method 3 (enclosed in conduit etc. in or on a wall)	Reference Methods 1 & 11 (clipped direct or on trays, touching)	Reference Method 12 (spaced*)	Reference Method 3 (enclosed in conduit etc. in or on a wall)	Reference Methods 1, 11 & 12 (in trefoil touching)	Reference Methods 1 & 11 (flat and touching)	Reference Method 12 (flat spaced*)
1	2	3	4	5	6	7	8	9
(mm²)	(mV/A/m)	(mV/A/m)	(mV/A/m)	(mV/A/m)	(mV/A/m)	(mV/A/m)	(mV/A/m)	(mV/A/m)
1	46	46	46	-	40	40	40	-
1.5	31	31	31	-	26	26	26	-
2.5	18	18	18	-	16	16	16	-
4	12	12	12	-	10	10	10	-
6	7.7	7.7	7.7	-	6.7	6.7	6.7	-
10	4.6	4.6	4.6	-	4.0	4.0	4.0	-
16	2.9	2.9	2.9	-	2.5	2.5	2.5	-
		r x z	r x z	r x z	r x z	r x z	r x z	r x z
25	1.80	1.85 0.32 1.90	1.85 0.20 1.85	1.85 0.29 1.85	1.60 0.28 1.65	1.60 0.175 1.60	1.60 0.25 1.60	1.60 0.32 1.65
35	1.30	1.35 0.31 1.40	1.30 0.195 1.35	1.30 0.28 1.35	1.15 0.27 1.20	1.15 0.170 1.15	1.15 0.24 1.15	1.15 0.32 1.20
50	0.95	1.00 0.30 1.05	0.97 0.190 0.99	0.97 0.28 1.00	0.87 0.26 0.91	0.84 0.165 0.86	0.84 0.24 0.88	0.84 0.32 0.90
70	0.65	0.68 0.29 0.74	0.66 0.185 0.69	0.66 0.27 0.72	0.60 0.25 0.65	0.57 0.160 0.60	0.57 0.24 0.62	0.57 0.31 0.65
95	0.48	0.51 0.28 0.58	0.49 0.180 0.52	0.49 0.27 0.56	0.44 0.25 0.51	0.43 0.155 0.45	0.43 0.23 0.48	0.42 0.31 0.52
120	0.38	0.40 0.27 0.49	0.39 0.175 0.43	0.39 0.26 0.47	0.35 0.24 0.43	0.34 0.155 0.37	0.34 0.23 0.41	0.34 0.30 0.45
150	0.30	0.33 0.27 0.42	0.31 0.175 0.36	0.31 0.26 0.40	0.29 0.24 0.37	0.27 0.150 0.31	0.27 0.23 0.35	0.27 0.30 0.40
185	0.25	0.27 0.27 0.38	0.25 0.170 0.30	0.25 0.26 0.36	0.23 0.23 0.33	0.22 0.150 0.26	0.22 0.22 0.31	0.22 0.30 0.37
240	0.190	0.21 0.26 0.33	0.195 0.165 0.26	0.195 0.25 0.32	0.180 0.23 0.29	0.170 0.145 0.22	0.170 0.22 0.28	0.170 0.30 0.34
300	0.150	0.170 0.26 0.31	0.155 0.165 0.23	0.155 0.25 0.29	0.150 0.23 0.27	0.135 0.140 0.195	0.135 0.22 0.26	0.135 0.29 0.32
400	0.115	0.140 0.26 0.30	0.125 0.160 0.20	0.120 0.25 0.28	0.130 0.22 0.26	0.110 0.140 0.175	0.110 0.21 0.24	0.105 0.29 0.31
500	0.091	0.115 0.26 0.28	0.100 0.155 0.185	0.097 0.24 0.26	0.105 0.22 0.24	0.089 0.135 0.165	0.089 0.21 0.23	0.085 0.29 0.30
630	0.072	0.100 0.25 0.27	0.082 0.155 0.175	0.077 0.24 0.25	0.085 0.22 0.24	0.073 0.135 0.155	0.073 0.21 0.22	0.067 0.28 0.29

NOTE: * Spacings larger than those specified in Method 12 (see table 4A) will result in larger voltage drop.

COPYRIGHT

TABLE 4F2A

Multicore, sheathed and non-armoured cables having 85°C rubber insulation (COPPER CONDUCTORS)

COPPER CONDUCTORS

CURRENT-CARRYING CAPACITY (amperes):

Ambient temperature: 30°C
Conductor operating temperature: 85°C

Conductor cross-sectional area	Reference Method 3 (enclosed)		Reference Method 1 (clipped direct)		Reference Method 11 (on a perforated cable tray) or Reference Method 13 (free air)	
	1 two-core cable, single-phase a.c. or d.c.	1 three- or four-core cable, three-phase a.c.	1 two-core cable, single-phase a.c. or d.c.	1 three- or four-core cable, three-phase a.c.	1 two-core cable, single-phase a.c. or d.c.	1 three- or four-core cable, three-phase a.c.
1	2	3	4	5	6	7
(mm²)	(A)	(A)	(A)	(A)	(A)	(A)
1	16.5	14.5	18	16	19.5	17.5
1.5	21	18.5	23	20	25	22
2.5	29	25	32	28	34	30
4	38	33	43	37	46	40
6	48	43	55	48	59	52
10	66	58	76	66	81	71
16	87	77	103	88	109	94
25	114	100	136	117	144	123
35	139	122	168	144	177	151
50	167	147	201	174	213	186
70	211	185	256	222	272	237
95	254	222	310	269	329	287
120	292	256	359	312	381	333
150	320	287	413	359	438	383
185	368	326	470	409	499	437
240	439	381	553	482	587	515
300	509	436	636	555	675	593

NOTES:

1. **Where the conductor is to be protected by a semi-enclosed fuse to BS 3036, see item 6.2 of the preface to this appendix.**
2. Where a conductor operates at a temperature exceeding 70°C it shall be ascertained that the equipment connected to the conductor is suitable for the conductor operating temperature
3. For cables in rigid pvc conduit the values stated in table 4D2 are applicable.
4. Where cables in this table are connected to equipment or accessories designed to operate at a temperature rating not exceeding 70°C, the current ratings given in the equivalent table for 70°C pvc insulated cables (BS 6004, BS 6346) shall be used.

COPYRIGHT

TABLE 4F2B

VOLTAGE DROP (per ampere per metre): Conductor operating temperature: 85°C

Conductor cross-sectional area	Two-core cable, d.c.	Two-core cable, single-phase a.c.			Three- or four-core cable, three-phase a.c.		
1	2	3			4		
(mm^2)	(mV/A/m)	(mV/A/m)			(mV/A/m)		
1	46	46			40		
1.5	31	31			26		
2.5	19	19			16		
4	12	12			10		
6	7.7	7.7			6.7		
10	4.6	4.6			4.0		
16	2.9	2.9			2.5		
		r	x	z	r	x	z
25	1.80	1.85	0.175	1.85	1.60	0.150	1.60
35	1.30	1.30	0.170	1.35	1.15	0.150	1.15
50	0.95	0.97	0.170	0.99	0.84	0.145	0.86
70	0.65	0.66	0.165	0.68	0.58	0.140	0.59
95	0.48	0.49	0.160	0.52	0.43	0.140	0.45
120	0.38	0.39	0.160	0.42	0.34	0.135	0.36
150	0.30	0.31	0.155	0.35	0.27	0.135	0.30
185	0.25	0.25	0.155	0.30	0.22	0.130	0.26
240	0.190	0.195	0.150	0.25	0.170	0.130	0.22
300	0.150	0.155	0.150	0.22	0.135	0.130	0.185

COPYRIGHT

COPPER CONDUCTORS

TABLE 4H1A

60°C rubber-insulated flexible cables

CURRENT-CARRYING CAPACITY (amperes):

Ambient temperature: 30°C
Conductor operating temperature: 60°C

	Single-phase a.c. or d.c.	Three-phase a.c.	Single-phase a.c. or d.c.
Conductor cross-sectional area	1 two-core cable, with or without protective conductor	1 three-core, four-core or five-core cable	2 single-core cables
1	2	3	4
(mm²)	(A)	(A)	(A)
4	30	26	-
6	39	34	-
10	51	47	-
16	73	63	-
25	97	83	-
35	-	102	140
50	-	124	175
70	-	158	216
95	-	192	258
120	-	222	302
150	-	255	347
185	-	291	394
240	-	343	471
300	-	394	541
400	-	-	644
500	-	-	738
630	-	-	861

NOTES:

1. The current ratings tabulated are for cables in free air but may also be used for cables resting on a surface. If the cable is to be wound on a drum on load the ratings should be reduced in accordance with NOTE 3 below and for cables which may be covered, NOTE 4 below.

2. **Where the conductor is to be protected by a semi-enclosed fuse to BS 3036, see item 6.2 of the preface to this appendix.**

3. *Flexible cables wound on reeling drums*

   The current ratings of cables used on reeling drums are to be reduced by the following factors:

   a) Radial type drum
      ventilated: 85%
      unventilated: 75%

   b) Ventilated cylindrical type drum
      1 layer of cable: 85%
      2 layers of cable: 65%
      3 layers of cable: 45%
      4 layers of cable: 35%

   A radial type drum is one where spiral layers of cable are accommodated between closely spaced flanges; if fitted with solid flanges the ratings given above should be reduced and the drum is described as non-ventilated and if the flanges have suitable apertures as ventilated.

   A ventilated cylindrical cable drum is one where layers of cable are accommodated between widely spaced flanges and the drum and end flanges have suitable ventilating apertures.

4. Where cable may be covered over or coiled up whilst on load, or the air movement over the cable restricted, the current rating should be reduced.

   It is not possible to specify the amount of reduction but the table of rating factors for reeling drums can be used as a guide.

COPYRIGHT

TABLE 4H1B

VOLTAGE DROP (per ampere per metre):

Conductor operating temperature: 60°C

Conductor cross-sectional area	Two-core cable, d.c.	Two-core cable, single-phase a.c.			1 three-core, four-core or five-core cable, three-phase a.c.			2 single-core cables, touching			
								d.c.	Single-phase a.c.*		
1	2	3			4			5	6		
(mm²)	(mV/A/m)	(mV/A/m)			(mV/A/m)			(mV/A/m)	(mV/A/m)		
4	12	12			10			-	-		
6	7.8	7.8			6.7			-	-		
10	4.6	4.6			4.0			-	-		
16	2.9	2.9			2.5			-	-		
		r	x	z	r	x	z		r	x	z
25	1.80	1.80	0.175	1.85	1.55	0.150	1.55	-	-	-	-
35	-	-	-	-	1.10	0.150	1.15	1.31	1.31	0.21	1.32
50	-	-	-	-	0.83	0.145	0.84	0.91	0.91	0.21	0.93
70	-	-	-	-	0.57	0.140	0.58	0.64	0.64	0.20	0.67
95	-	-	-	-	0.42	0.135	0.44	0.49	0.49	0.195	0.53
120	-	-	-	-	0.33	0.135	0.36	0.38	0.38	0.190	0.43
150	-	-	-	-	0.27	0.130	0.30	0.31	0.31	0.190	0.36
185	-	-	-	-	0.22	0.130	0.26	0.25	0.25	0.190	0.32
240	-	-	-	-	0.170	0.130	0.21	0.190	0.195	0.185	0.27
300	-	-	-	-	0.135	0.125	0.185	0.150	0.155	0.180	0.24
400	-	-	-	-	-	-	-	0.115	0.120	0.175	0.21
500	-	-	-	-	-	-	-	0.090	0.099	0.170	0.20
630	-	-	-	-	-	-	-	0.068	0.079	0.170	0.185

NOTE: * A larger voltage drop will result if the cables are spaced.

COPYRIGHT

TABLE 4H2A

85°C or 150°C rubber-insulated flexible cables

COPPER CONDUCTORS

CURRENT-CARRYING CAPACITY (amperes): Ambient temperature: 30°C
Conductor operating temperature: 85°C

Conductor cross-sectional area	d.c. or single-phase a.c. (1 two-core cable, with or without protective conductor)	Three-phase a.c. (1 three-core, four-core or five-core cable)	Single-phase a.c. or d.c., 2 single-core cables, touching
1	2	3	4
(mm²)	(A)	(A)	(A)
4	41	36	-
6	53	47	-
10	73	64	-
16	99	86	-
25	131	114	-
35	-	140	192
50	-	170	240
70	-	216	297
95	-	262	354
120	-	303	414
150	-	348	476
185	-	397	540
240	-	467	645
300	-	537	741
400	-	-	885
500	-	-	1017
630	-	-	1190

CORRECTION FACTOR FOR AMBIENT TEMPERATURE

85°C rubber-insulated cables:

Ambient temperature	35°C	40°C	45°C	50°C	55°C	60°C	65°C	70°C	75°C	80°C
Correction factor	0.95	0.90	0.85	0.80	0.74	0.67	0.60	0.52	0.43	0.30

150°C rubber-insulated cables:

Ambient temperature	35 to 85°C	90°C	95°C	100°C	105°C	110°C	115°C	120°C	125°C	130°C	135°C	140°C	145°C
Correction factor	1.0	0.96	0.92	0.88	0.83	0.78	0.73	0.68	0.62	0.55	0.48	0.39	0.28

NOTES:

1. The current ratings tabulated are for cables in free air but may also be used for cables resting on a surface. If the cable is to be wound on a drum on load the ratings should be reduced in accordance with NOTE 3 below and for cables which may be covered, NOTE 4 below.
2. **Where the conductor is to be protected by a semi-enclosed fuse to BS 3036, see item 6.2 of the preface to this appendix.**
3. *Flexible cables wound on reeling drums*
   The current ratings of cables used on reeling drums are to be reduced by the following factors:
   a) Radial type drum
      ventilated: 85%
      unventilated: 75%
   b) Ventilated cylindrical type drum
      1 layer of cable: 85%
      2 layers of cable: 65%
      3 layers of cable: 45%
      4 layers of cable: 35%
   A radial type drum is one where spiral layers of cable are accommodated between closely spaced flanges; if fitted with solid flanges the ratings given above should be reduced and the drum is described as non-ventilated and if the flanges have suitable apertures as ventilated.
   A ventilated cylindrical cable drum is one where layers of cable are accommodated between widely spaced flanges and the drum and end flanges have suitable ventilating apertures.
4. Where cable may be covered over or coiled up whilst on load, or the air movement over the cable restricted, the current rating should be reduced.
   It is not possible to specify the amount of reduction but the table of rating factors for reeling drums can be used as a guide.
5. The temperature limits given in table 54C should be taken into account when it is intended to operate these cables at maximum permissible temperature.
6. Where a conductor operates at a temperature exceeding 70°C it shall be ascertained that the equipment connected to the conductor is suitable for the conductor operating temperature.
7. For 150°C cables, where the correction factors for ambient temperature are used, the conductor operating temperature may be up to 150°C.
8. BS 6007 does not include rubber-insulated cables above 16 mm² nominal cross-sectional area

COPYRIGHT

TABLE 4H2B

VOLTAGE DROP (per ampere per metre): Conductor operating temperature: 85°C

Conductor cross-sectional area	1 two-core or 2 single-core cables d.c.	Two-core cable single-phase a.c.			1 three-core, four-core or five-core cable three-phase a.c.			2 single-core cables touching Single-phase a.c.*		
1	2	3			4			5		
(mm²)	(mV/A/m)	(mV/A/m)			(mV/A/m)			(mV/A/m)		
4	13	13			11			-		
6	8.4	8.4			7.3			-		
10	5.0	5.0			4.3			-		
16	3.1	3.1			2.7			-		
		r	x	z	r	x	z	r	x	z
25	2.0	2.00	0.175	2.00	1.70	0.150	1.70	-	-	-
35	1.42	-	-	-	1.20	0.150	1.20	1.42	0.21	1.43
50	0.99	-	-	-	0.90	0.145	0.91	0.99	0.21	1.01
70	0.70	-	-	-	0.61	0.140	0.63	0.70	0.20	0.72
95	0.53	-	-	-	0.46	0.135	0.48	0.53	0.195	0.56
120	0.41	-	-	-	0.36	0.135	0.39	0.41	0.190	0.46
150	0.33	-	-	-	0.29	0.130	0.32	0.33	0.190	0.38
185	0.27	-	-	-	0.24	0.130	0.27	0.27	0.190	0.33
240	0.21	-	-	-	0.185	0.130	0.22	0.21	0.185	0.28
300	0.165	-	-	-	0.145	0.125	0.195	0.170	0.180	0.25
400	0.125	-	-	-	-	-	-	0.130	0.175	0.22
500	0.098	-	-	-	-	-	-	0.105	0.170	0.20
630	0.073	-	-	-	-	-	-	0.084	0.170	0.190

NOTES:

1. The voltage drop figures given above are based on a conductor operating temperature of 85°C and are therefore not accurate when the operating temperature is in excess of 85°C. In the case of the 150°C cables with a conductor temperature of 150°C the above resistive values should be increased by a factor of 1.2. (This factor is only applicable to the range of 150°C rubber-insulated cables included in BS 6007 i.e. up to 16 mm² nominal cross-sectional area).
2. * A larger voltage drop will result if the cables are spaced.

COPYRIGHT

TABLE 4H3A

Flexible cords

CURRENT-CARRYING CAPACITY (amperes): and MASS SUPPORTABLE (kg):

Conductor cross-sectional area	Current-carrying capacity		Maximum mass supportable by 522-08-06)
	Single-phase a.c.	Three-phase a.c.	
1	2	3	4
(mm²)	(A)	(A)	(kg)
0.5	3	3	2
0.75	6	6	3
1	10	10	5
1.25	13	-	5
1.5	16	16	5
2.5	25	20	5
4	32	25	5

Where cable is on a reel see the notes to table 4H1A.

CORRECTION FACTOR FOR AMBIENT TEMPERATURE

60°C rubber and pvc cords:

Ambient temperature	35°C	40°C	45°C	50°C	55°C
Correction factor	0.91	0.82	0.71	0.58	0.41

85°C rubber cords having a h.o.f.r. sheath or a heat-resisting pvc sheath and for 85°C and 90°C heat-resisting pvc cords:

Ambient temperature	35 to 50°C	55°C	60°C	65°C	70°C
Correction factor	1.0	0.96	0.83	0.67	0.47

150°C rubber cords:

Ambient temperature	35 to 120°C	125°C	130°C	135°C	140°C	145°C
Correction factor	1.0	0.96	0.85	0.74	0.60	0.42

Glass fibre cords:

Ambient temperature	35 to 150°C	155°C	160°C	165°C	170°C	175°C
Correction factor	1.0	0.92	0.82	0.71	0.57	0.40

COPYRIGHT

TABLE 4H3B

VOLTAGE DROP (per ampere per metre): Conductor operating temperature: 60°C*

Conductor cross-sectional area	d.c. or single-phase a.c.	Three-phase a.c.
1	2	3
(mm^2)	(mV/A/m)	(mV/A/m)
0.5	93	80
0.75	62	54
1	46	40
1.25	37	-
1.5	32	27
2.5	19	16
4	12	10

NOTE: * The tabulated values above are for 60°C rubber-insulated and pvc-insulated flexible cords and for other types of flexible cords they are to be multiplied by the following factors:

For	85°C rubber or 85°C and 90°C pvc-insulated	1.09
	150°C rubber-insulated	1.31
	185°C glass fibre	1.43

COPYRIGHT

COPPER CONDUCTORS

TABLE 4J1A

Mineral insulated cables bare and exposed to touch (see note 2) or having an overall covering of pvc (COPPER CONDUCTORS AND SHEATH)

CURRENT-CARRYING CAPACITY (amperes):

Ambient temperature: 30°C
Sheath operating temperature: 70°C

REFERENCE METHOD 1 (CLIPPED DIRECT)								
Conductor cross-sectional area	2 single-core cables, or 1 two-core cable, single-phase a.c. or d.c.	3 single-core cables in trefoil, or 1 three-core cable, three-phase a.c.	3 single-core cables in flat formation, three-phase a.c.	1 four-core cable, three cores loaded three-phase a.c.	1 four-core cable, all cores loaded	1 seven-core cable, all cores loaded	1 twelve-core cable, all cores loaded	1 nineteen-core cable, all cores loaded
1	2	3	4	5	6	7	8	9
(mm²)	(A)	(A)	(A)	(A)	(A)	(A)	(A)	(A)
Light duty 500 V								
1	18.5	15	17	15	13	10	-	-
1.5	23	19	21	19.5	16.5	13	-	-
2.5	31	26	29	26	22	17.5	-	-
4	40	35	38	-	-	-	-	-
Heavy duty 750 V								
1	19.5	16	18	16.5	14.5	11.5	9.5	8.5
1.5	25	21	23	21	18	14.5	12.0	10.0
2.5	34	28	31	28	25	19.5	16.0	-
4	45	37	41	37	32	26	-	-
6	57	48	52	47	41	-	-	-
10	77	65	70	64	55	-	-	-
16	102	86	92	85	72	-	-	-
25	133	112	120	110	94	-	-	-
35	163	137	147	-	-	-	-	-
50	202	169	181	-	-	-	-	-
70	247	207	221	-	-	-	-	-
95	296	249	264	-	-	-	-	-
120	340	286	303	-	-	-	-	-
150	388	327	346	-	-	-	-	-
185	440	371	392	-	-	-	-	-
240	514	434	457	-	-	-	-	-

NOTES:

1. For single-core cables, the sheaths of the circuit are assumed to be connected together at both ends.
2. For bare cables exposed to touch, the tabulated values should be multiplied by 0.9.

COPYRIGHT

TABLE 4J1A (continued)

Mineral insulated cables bare and exposed to touch (see note 2) or having an overall covering of pvc (COPPER CONDUCTORS AND SHEATH)

CURRENT-CARRYING CAPACITY (amperes):

Ambient temperature: 30°C
Sheath operating temperature: 70°C

REFERENCE METHOD 11 (ON A PERFORATED CABLE TRAY, HORIZONTAL OR VERTICAL)												
Conductor cross-sectional area	2 single-core cables, touching	1 two-core cable,	1 three-core cable, three-phase a.c.	1 four-core cable, three cores loaded three-phase a.c.	1 four-core cable, all cores loaded	1 seven-core cable, all cores loaded	1 twelve-core cable, all cores loaded	1 nineteen-core cable, all cores loaded	3 single-core cables, three-phase a.c.			
	Single-phase a.c. or d.c.								Vertical spaced	Horizontal spaced	Flat touching	Trefoil
1	10	11	12	13	14	15	16	17	18	19	20	21
(mm²)	(A)	(A)	(A)	(A)	(A)	(A)	(A)	(A)	(A)	(A)	(A)	(A)
Light duty 500 V												
1	18.5	19.5	16.5	16	14	11	-	-	19	22	17	16.5
1.5	24	25	21	21	18	14	-	-	25	28	22	21
2.5	31	33	28	28	24	19	-	-	32	37	29	28
4	42	44	37	-	-	-	-	-	43	48	39	37
Heavy duty 750 V												
1	20	21	17.5	18	16	12	10	9	21	24	19	17.5
1.5	25	26	22	23	20	15.5	13	11	27	30	25	22
2.5	34	36	30	30	27	21	17	-	35	41	32	30
4	45	47	40	40	35	28	-	-	47	53	43	40
6	57	60	51	51	44	-	-	-	59	67	54	51
10	78	82	69	68	59	-	-	-	80	90	73	69
16	104	109	92	89	78	-	-	-	105	119	97	92
25	135	142	120	116	101	-	-	-	135	154	125	120
35	165	174	147	-	-	-	-	-	164	187	153	147
50	204	215	182	-	-	-	-	-	202	230	188	182
70	251	264	223	-	-	-	-	-	246	279	229	223
95	301	317	267	-	-	-	-	-	294	333	275	267
120	346	364	308	-	-	-	-	-	335	382	314	308
150	395	416	352	-	-	-	-	-	380	431	358	352
185	448	472	399	-	-	-	-	-	424	482	405	399
240	524	552	466	-	-	-	-	-	472	537	471	466

NOTES:

1. For single-core cables, the sheaths of the circuit are assumed to be connected together at both ends.
2. For bare cables exposed to touch, the tabulated values should be multiplied by 0.9.

COPYRIGHT

COPPER CONDUCTORS

TABLE 4J1A (continued)

Mineral insulated cables bare and exposed to touch (see note 2) or having an overall covering of pvc (COPPER CONDUCTORS AND SHEATH)

CURRENT-CARRYING CAPACITY (amperes):

Ambient temperature: 30°C
Sheath operating temperature: 70°C

REFERENCE METHODS 12 and 13 (FREE AIR)										
Conductor cross-sectional area	2 single-core cables, or 1 two-core cable, single-phase a.c. or d.c.	3 single-core cables in trefoil, or 1 three-core cable, three phase a.c.	1 four-core cable, three cores loaded three-phase a.c.	1 four-core cable, all cores loaded	1 seven-core cable, all cores loaded	1 twelve-core cable, all cores loaded	1 nineteen-core cable, all cores loaded	3 single-core cables, three-phase a.c.		
								Vertical spaced	Horizontal spaced	Touching
1	22	23	24	25	26	27	28	29	30	31
(mm²)	(A)	(A)	(A)	(A)	(A)	(A)	(A)	(A)	(A)	(A)
Light duty 500 V										
1	19.5	16.5	16	14	11	-	-	20	23	18
1.5	25	21	21	18	14	-	-	26	29	23
2.5	33	28	28	24	19	-	-	34	39	31
4	44	37	-	-	-	-	-	45	51	41
Heavy duty 750 V										
1	21	17.5	18	16	12	10	9	22	25	20
1.5	26	22	23	20	15.5	13	11	28	32	26
2.5	36	30	30	27	21	17	-	37	43	34
4	47	40	40	35	28	-	-	49	56	45
6	60	51	51	44	-	-	-	62	71	57
10	82	69	68	59	-	-	-	84	95	77
16	109	92	89	78	-	-	-	110	125	102
25	142	120	116	101	-	-	-	142	162	132
35	174	147	-	-	-	-	-	173	197	161
50	215	182	-	-	-	-	-	213	242	198
70	264	223	-	-	-	-	-	259	294	241
95	317	267	-	-	-	-	-	309	351	289
120	364	308	-	-	-	-	-	353	402	331
150	416	352	-	-	-	-	-	400	454	377
185	472	399	-	-	-	-	-	446	507	426
240	552	466	-	-	-	-	-	497	565	496

NOTES:

1. For single-core cables, the sheaths of the circuit are assumed to be connected together at both ends.
2. For bare cables exposed to touch, the tabulated values should be multiplied by 0.9.

COPYRIGHT

TABLE 4J1B

Mineral insulated cables bare and exposed to touch or having an overall covering of pvc (COPPER CONDUCTORS AND SHEATH)

VOLTAGE DROP (per ampere per metre) for single-phase a.c. or d.c.: Sheath operating temperature: 70°C

Conductor cross-sectional area	Two single-core cables, touching			One two-core or multicore* cable		
1	2			3		
(mm²)	(mV/A/m)			(mV/A/m)		
1	42			42		
1.5	28			28		
2.5	17			17		
4	10			10		
6	7			7		
10	4.2			4.2		
16	2.6			2.6		
	r	x	z	r	x	z
25	1.65	0.200	1.65	1.65	0.145	1.65
35	1.20	0.195	1.20	-	-	-
50	0.89	0.185	0.91	-	-	-
70	0.62	0.180	0.64	-	-	-
95	0.46	0.175	0.49	-	-	-
120	0.37	0.170	0.41	-	-	-
150	0.30	0.170	0.34	-	-	-
185	0.25	0.165	0.29	-	-	-
240	0.190	0.160	0.25	-	-	-

NOTE: * Multiple single-phase a.c. or d.c. circuits in a multicore cable

COPYRIGHT

TABLE 4J1B (continued)

Mineral insulated cables bare and exposed to touch or having an overall covering of pvc (COPPER CONDUCTORS AND SHEATH)

VOLTAGE DROP (per ampere per metre) for three-phase operation: Sheath operating temperature: 70°C

Conductor cross-sectional area	Three single-core cables			One three-core or four-core or multicore* cable		
	Trefoil touching	Flat formation				
		Touching	Spaced 1 cable diameter apart			
1	2	3	4	5		
(mm²)	(mV/A/m)	(mV/A/m)	(mV/A/m)	(mV/A/m)		
1	36	36	36	36		
1.5	24	24	24	24		
2.5	14	14	14	14		
4	9.1	9.1	9.1	9.1		
6	6.0	6.0	6.0	6.0		
10	3.6	3.6	3.6	3.6		
16	2.3	2.3	2.3	2.3		
	r x z	r x z	r x z	r x z		
25	1.45 0.170 1.45	1.45 0.25 1.45	1.45 0.32 1.50	1.45 0.125 1.45		
35	1.05 0.165 1.05	1.05 0.24 1.10	1.05 0.31 1.10	- - -		
50	0.78 0.160 0.80	0.79 0.24 0.83	0.82 0.31 0.87	- - -		
70	0.54 0.155 0.56	0.55 0.23 0.60	0.58 0.30 0.65	- - -		
95	0.40 0.150 0.43	0.41 0.22 0.47	0.44 0.29 0.53	- - -		
120	0.32 0.150 0.36	0.33 0.22 0.40	0.36 0.28 0.46	- - -		
150	0.26 0.145 0.30	0.29 0.21 0.36	0.32 0.27 0.42	- - -		
185	0.21 0.140 0.26	0.25 0.21 0.32	0.28 0.26 0.39	- - -		
240	0.165 0.140 0.22	0.21 0.20 0.29	0.26 0.25 0.36	- - -		

NOTE: * Multiple three-phase circuits in a multicore cable

COPYRIGHT

COPPER CONDUCTORS

TABLE 4J2A

Mineral insulated cables bare and neither exposed to touch nor in contact with combustible materials (COPPER CONDUCTORS AND SHEATH)

CURRENT-CARRYING CAPACITY (amperes):

Ambient temperature: 30°C
Sheath operating temperature: 105°C

Conductor cross-sectional area	REFERENCE METHOD 1 (CLIPPED DIRECT)							
	2 single-core cables, or 1 two-core cable, single-phase a.c. or d.c.	3 single-core cables in trefoil, or 1 three-core cable, three-phase a.c.	3 single-core cables in flat formation, three-phase a.c.	1 four-core cable, three cores loaded three-phase a.c.	1 four-core cable, all cores loaded	1 seven-core cable, all cores loaded	1 twelve-core cable, all cores loaded	1 nineteen-core cable, all cores loaded
1	2	3	4	5	6	7	8	9
(mm²)	(A)	(A)	(A)	(A)	(A)	(A)	(A)	(A)
Light duty 500 V								
1	22	19	21	18.5	16.5	13	-	-
1.5	28	24	27	24	21	16.5	-	-
2.5	38	33	36	33	28	22	-	-
4	51	44	47	-	-	-	-	-
Heavy duty 750 V								
1	24	20	24	20	17.5	14	12	10.5
1.5	31	26	30	26	22	17.5	15.5	13
2.5	42	35	41	35	30	24	20	-
4	55	47	53	46	40	32	-	-
6	70	59	67	58	50	-	-	-
10	96	81	91	78	68	-	-	-
16	127	107	119	103	90	-	-	-
25	166	140	154	134	117	-	-	-
35	203	171	187	-	-	-	-	-
50	251	212	230	-	-	-	-	-
70	307	260	280	-	-	-	-	-
95	369	312	334	-	-	-	-	-
120	424	359	383	-	-	-	-	-
150	485	410	435	-	-	-	-	-
185	550	465	492	-	-	-	-	-
240	643	544	572	-	-	-	-	-

NOTES:

1. For single-core cables, the sheaths of the circuit are assumed to be connected together at both ends.
2. No correction factor for grouping need be applied.
3. Where a conductor operates at a temperature exceeding 70°C it shall be ascertained that the equipment connected to the conductor is suitable for the conductor operating temperature.

COPYRIGHT

COPPER CONDUCTORS

TABLE 4J2A (continued)

Mineral insulated cables bare and neither exposed to touch nor in contact with combustible materials (COPPER CONDUCTORS AND SHEATH)

CURRENT-CARRYING CAPACITY (amperes):

Ambient temperature: 30°C
Sheath operating temperature: 105°C

REFERENCE METHODS 12 and 13 (FREE AIR)										
								3 single-core cables, three-phase a.c.		
Conductor cross-sectional area	2 single-core cables, or 1 two-core cable, single-phase a.c. or d.c.	3 single-core cables in trefoil, or 1 three-core cable, three-phase a.c.	1 four-core cable, three cores loaded three-phase a.c.	1 four-core cable, all cores loaded	1 seven-core cable, all cores loaded	1 twelve-core cable, all cores loaded	1 nineteen-core cable, all cores loaded	Vertical spaced	Horizontal spaced	Touching
1	10	11	12	13	14	15	16	17	18	19
(mm²)	(A)	(A)	(A)	(A)	(A)	(A)	(A)	(A)	(A)	(A)
Light duty 500 V										
1	24	21	20	18	14	-	-	26	29	23
1.5	31	26	26	22	18	-	-	33	37	29
2.5	41	35	35	30	24	-	-	43	49	39
4	54	46	-	-	-	-	-	56	64	51
Heavy duty 750 V										
1	26	22	22	19	15	13	11	28	32	25
1.5	33	28	28	24	19	16.5	14	35	40	32
2.5	45	38	37	32	26	22	-	47	54	43
4	60	50	49	43	34	-	-	61	70	56
6	76	64	63	54	-	-	-	78	89	71
10	104	87	85	73	-	-	-	105	120	96
16	137	115	112	97	-	-	-	137	157	127
25	179	150	146	126	-	-	-	178	204	164
35	220	184	-	-	-	-	-	216	248	200
50	272	228	-	-	-	-	-	266	304	247
70	333	279	-	-	-	-	-	323	370	300
95	400	335	-	-	-	-	-	385	441	359
120	460	385	-	-	-	-	-	441	505	411
150	526	441	-	-	-	-	-	498	565	469
185	596	500	-	-	-	-	-	557	629	530
240	697	584	-	-	-	-	-	624	704	617

NOTES:

1. For single-core cables, the sheaths of the circuit are assumed to be connected together at both ends.
2. No correction factor for grouping need be applied.
3. Where a conductor operates at a temperature exceeding 70°C it shall be ascertained that the equipment connected to the conductor is suitable for the conductor operating temperature.

COPYRIGHT

COPPER CONDUCTORS

TABLE 4J2B

Mineral insulated cables bare and neither exposed to touch nor in contact with combustible materials (COPPER CONDUCTORS AND SHEATH)

VOLTAGE DROP (per ampere per metre) for single-phase a.c. or d.c.: Sheath operating temperature: 105°C.

Conductor cross-sectional area	Two single-core cables touching			One two-core or multicore* cable		
1	2			3		
(mm^2)	(mV/A/m)			(mV/A/m)		
1	47			47		
1.5	31			31		
2.5	19			19		
4	12			12		
6	7.8			7.8		
10	4.7			4.7		
16	3.0			3.0		
	r	x	z	r	x	z
25	1.85	0.180	1.85	1.85	0.145	1.85
35	1.35	0.175	1.35	-	-	-
50	1.00	0.170	1.00	-	-	-
70	0.69	0.165	0.71	-	-	-
95	0.51	0.160	0.54	-	-	-
120	0.41	0.160	0.44	-	-	-
150	0.33	0.155	0.36	-	-	-
185	0.27	0.150	0.31	-	-	-
240	0.21	0.150	0.26	-	-	-

NOTE: * Multiple single-phase a.c. or d.c. circuits in a multicore cable

COPYRIGHT

TABLE 4J2B (continued)

Mineral insulated cables bare and neither exposed to touch nor in contact with combustible materials (COPPER CONDUCTORS AND SHEATH)

VOLTAGE DROP (per ampere per metre) for three-phase operation: Sheath operating temperature: 105°C

Conductor cross-sectional area	Three single-core cables			One three-core or four-core or multicore* cable
	Trefoil touching	Flat formation		
		Touching	Spaced 1 cable diameter apart	
1	2	3	4	5
(mm^2)	(mV/A/m)	(mV/A/m)	(mV/A/m)	(mV/A/m)
1	40	40	40	40
1.5	27	27	27	27
2.5	16	16	16	16
4	10	10	10	10
6	6.8	6.8	6.8	6.8
10	4.1	4.1	4.1	4.1
16	2.6	2.6	2.6	2.6
	r x z	r x z	r x z	r x z
25	1.60 0.160 1.65	1.60 0.23 1.65	1.60 0.31 1.65	1.60 0.125 1.60
35	1.15 0.155 1.20	1.15 0.23 1.20	1.20 0.30 1.25	- - -
50	0.87 0.150 0.88	0.88 0.22 0.91	0.90 0.29 0.95	- - -
70	0.60 0.145 0.62	0.61 0.22 0.65	0.63 0.29 0.70	- - -
95	0.45 0.140 0.47	0.46 0.21 0.50	0.48 0.28 0.56	- - -
120	0.36 0.135 0.38	0.37 0.21 0.42	0.39 0.28 0.48	- - -
150	0.29 0.135 0.32	0.31 0.20 0.37	0.34 0.27 0.43	- - -
185	0.23 0.130 0.27	0.26 0.20 0.33	0.29 0.26 0.39	- - -
240	0.180 0.130 0.22	0.22 0.195 0.29	0.26 0.25 0.36	- - -

NOTE: * Multiple three-phase circuits in a multicore cable

COPYRIGHT

ALUMINIUM CONDUCTORS

TABLE 4K1A

Single-core pvc-insulated cables, non-armoured, with or without sheath (ALUMINIUM CONDUCTORS)

CURRENT-CARRYING CAPACITY (amperes):

Ambient temperature: 30°C
Conductor operating temperature: 70°C

	Reference Method 4 (enclosed in conduit in thermally insulating wall etc.)		Reference Method 3 (enclosed in conduit on a wall or in trunking etc.)		Reference Method 1 (clipped direct)		Reference Method 11 (on a perforated cable tray horizontal or vertical)		Reference Method 12 (free air)		
									Horizontal flat spaced	Vertical flat spaced	Trefoil
Conductor cross-sectional area	2 cables, single-phase a.c. or d.c.	3 or 4 cables, three-phase a.c.	2 cables, single-phase a.c. or d.c.	3 or 4 cables, three-phase a.c.	2 cables, single-phase a.c. or d.c. flat and touching	3 or 4 cables, three-phase a.c. flat and touching or trefoil	2 cables, single-phase a.c. or d.c. flat and touching	3 or 4 cables, three-phase a.c. flat and touching or trefoil	2 cables, single-phase a.c. or d.c. or 3 cables three-phase a.c.	2 cables, single-phase a.c. or d.c. or 3 cables three-phase a.c.	3 cables trefoil, three-phase a.c.
1	2	3	4	5	6	7	8	9	10	11	12
(mm²)	(A)	(A)	(A)	(A)	(A)	(A)	(A)	(A)	(A)	(A)	(A)
50	93	84	118	104	134	123	144	132	163	148	128
70	118	107	150	133	172	159	185	169	210	191	165
95	142	129	181	161	210	194	225	206	256	234	203
120	164	149	210	186	245	226	261	240	298	273	237
150	189	170	234	204	283	261	301	277	344	317	274
185	215	194	266	230	324	299	344	317	394	364	316
240	252	227	312	269	384	354	407	375	466	432	375
300	289	261	358	306	444	410	469	433	538	501	435
380	-	-	413	352	511	472	543	502	625	584	507
480	-	-	477	405	591	546	629	582	726	680	590
600	-	-	545	462	679	626	722	669	837	787	680
740	-	-	-	-	771	709	820	761	956	902	776
960	-	-	-	-	900	823	953	886	1125	1066	907
1200	-	-	-	-	1022	926	1073	999	1293	1229	1026

NOTE:
Where the conductor is to be protected by a semi-enclosed fuse to BS 3036, see item 6.2 of the preface to this appendix.

COPYRIGHT

TABLE 4K1B

VOLTAGE DROP (per ampere per metre):

Conductor operating temperature: 70°C

Conductor cross-sectional area	2 cables, d.c.	2 cables, single-phase a.c.									3 or 4 cables, three-phase a.c.											
		Reference Methods 3 & 4 (enclosed in conduit etc. in or on a wall)			Reference Methods 1 & 11 (clipped direct or on trays, touching)			Reference Method 12 (spaced*)			Reference Methods 3 & 4 (enclosed in conduit etc. in or on a wall)			Reference Methods 1, 11 & 12 (in trefoil touching)			Reference Methods 1 & 11 (flat touching)			Reference Method 12 (flat spaced*)		
1	2	3			4			5			6			7			8			9		
(mm²)	(mV/A/m)	(mV/A/m)			(mV/A/m)			(mV/A/m)			(mV/A/m)			(mV/A/m)			(mV/A/m)			(mV/A/m)		
		r	x	z	r	x	z	r	x	z	r	x	z	r	x	z	r	x	z	r	x	z
50	1.55	1.60	0.30	1.60	1.55	0.190	1.55	1.55	0.28	1.55	1.35	0.26	1.40	1.35	0.165	1.35	1.35	0.24	1.35	1.35	0.32	1.40
70	1.05	1.10	0.30	1.15	1.05	0.185	1.05	1.05	0.27	1.10	0.94	0.26	0.97	0.91	0.160	0.92	0.91	0.24	0.94	0.91	0.31	0.96
95	0.77	0.81	0.29	0.86	0.77	0.185	0.79	0.77	0.27	0.82	0.70	0.25	0.74	0.67	0.160	0.69	0.67	0.23	0.71	0.67	0.31	0.74
120	0.61	0.64	0.29	0.70	0.61	0.180	0.64	0.61	0.27	0.67	0.55	0.25	0.61	0.53	0.155	0.55	0.53	0.23	0.58	0.53	0.31	0.61
150	0.49	0.51	0.28	0.59	0.49	0.175	0.52	0.49	0.26	0.55	0.45	0.24	0.51	0.42	0.155	0.45	0.42	0.23	0.48	0.42	0.30	0.52
185	0.39	0.42	0.28	0.50	0.40	0.175	0.43	0.39	0.26	0.47	0.36	0.24	0.44	0.34	0.150	0.37	0.34	0.23	0.41	0.34	0.30	0.46
240	0.30	0.32	0.27	0.42	0.30	0.170	0.35	0.30	0.26	0.40	0.28	0.24	0.37	0.26	0.150	0.30	0.26	0.22	0.35	0.26	0.30	0.40
300	0.24	0.26	0.27	0.37	0.24	0.170	0.30	0.24	0.26	0.35	0.23	0.23	0.32	0.21	0.145	0.26	0.21	0.22	0.31	0.21	0.30	0.36
380	0.190	0.22	0.27	0.35	0.195	0.165	0.26	0.195	0.25	0.32	0.190	0.23	0.30	0.170	0.145	0.22	0.170	0.22	0.28	0.170	0.29	0.34
480	0.150	0.180	0.26	0.32	0.155	0.165	0.23	0.155	0.25	0.29	0.155	0.23	0.27	0.140	0.140	0.195	0.140	0.22	0.26	0.135	0.29	0.32
600	0.120	0.150	0.26	0.30	0.130	0.160	0.21	0.125	0.25	0.28	0.125	0.22	0.26	0.110	0.140	0.180	0.110	0.22	0.24	0.110	0.29	0.31
740	0.099	-	-	-	0.105	0.160	0.190	0.100	0.25	0.27	-	-	-	0.094	0.135	0.165	0.094	0.21	0.23	0.089	0.29	0.30
960	0.075	-	-	-	0.086	0.155	0.180	0.082	0.24	0.26	-	-	-	0.077	0.135	0.155	0.077	0.21	0.22	0.071	0.29	0.29
1200	0.060	-	-	-	0.074	0.155	0.170	0.068	0.24	0.25	-	-	-	0.066	0.135	0.150	0.066	0.21	0.22	0.059	0.28	0.29

NOTE: * Spacings larger than those specified in Method 12 (see table 4A) will result in a larger voltage drop.

COPYRIGHT

ALUMINIUM CONDUCTORS

TABLE 4K2A

Multicore pvc-insulated cables, non-armoured
(ALUMINIUM CONDUCTORS)

CURRENT-CARRYING CAPACITY (amperes):

Ambient temperature: 30°C
Conductor operating temperature: 70°C

Conductor cross-sectional area	Reference Method 4 (enclosed in an insulating wall etc.)		Reference Method 3 (enclosed in conduit on a wall or ceiling, or in trunking)		Reference Method 1 (clipped direct)		Reference Method 11 (on a perforated cable tray) or Reference Method 13 (free air)	
	1 two-core cable, single-phase a.c. or d.c.	1 three- or four-core cable, three-phase a.c.	1 two-core cable, single-phase a.c. or d.c.	1 three- or four-core cable, three-phase a.c.	1 two-core cable, single-phase a.c. or d.c.	1 three- or four-core cable, three-phase a.c.	1 two-core cable, single-phase a.c. or d.c.	1 three- or four-core cable, three-phase a.c.
1	2	3	4	5	6	7	8	9
(mm²)	(A)	(A)	(A)	(A)	(A)	(A)	(A)	(A)
16	44	41	54	48	66	59	73	61
25	58	53	71	62	83	73	89	78
35	71	65	86	77	103	90	111	96
50	86	78	104	92	125	110	135	117
70	108	98	131	116	160	140	173	150
95	130	118	157	139	195	170	210	183
120	-	135	-	160	-	197	-	212
150	-	155	-	184	-	227	-	245
185	-	176	-	210	-	259	-	280
240	-	207	-	248	-	305	-	330
300	-	237	-	285	-	351	-	381

NOTE:
Where the conductor is to be protected by a semi-enclosed fuse to BS 3036, see item 6.2 of the preface to this appendix.

COPYRIGHT

TABLE 4K2B

VOLTAGE DROP (per ampere per metre): Conductor operating temperature: 70°C

Conductor cross-sectional area	Two-core cable, d.c.	Two-core cable, single-phase a.c.			Three- or four-core cable, three-phase a.c.		
1	2	3			4		
(mm²)	(mV/A/m)	(mV/A/m)			(mV/A/m)		
16	4.5	4.5			3.9		
		r	x	z	r	x	z
25	2.9	2.9	0.175	2.9	2.5	0.150	2.5
35	2.1	2.1	0.170	2.1	1.80	0.150	1.80
50	1.55	1.55	0.170	1.55	1.35	0.145	1.35
70	1.05	1.05	0.165	1.05	0.90	0.140	0.92
95	0.77	0.77	0.160	0.79	0.67	0.140	0.68
120	-	-	-	-	0.53	0.135	0.55
150	-	-	-	-	0.42	0.135	0.44
185	-	-	-	-	0.34	0.135	0.37
240	-	-	-	-	0.26	0.130	0.30
300	-	-	-	-	0.21	0.130	0.25

COPYRIGHT

ALUMINIUM CONDUCTORS

TABLE 4K3A

Single-core armoured pvc-insulated cables (non-magnetic armour)
(ALUMINIUM CONDUCTORS)

CURRENT-CARRYING CAPACITY (amperes):

Ambient temperature: 30°C
Conductor operating temperature: 70°C

	Reference Method 1 (clipped direct)		Reference Method 11 (on a perforated cable tray)		Reference Method 12 (free air)						
					2 cables, single-phase a.c.		2 cables, d.c. spaced		3 or 4 cables, three-phase a.c.		
Conductor cross-sectional area	2 cables, single-phase a.c. or d.c. flat and touching	3 or 4 cables, three-phase a.c. flat and touching	2 cables, single-phase a.c. or d.c. flat and touching	3 or 4 cables, three-phase a.c. flat and touching	Horizontal flat spaced	Vertical flat spaced	Horizontal	Vertical	Horizontal flat spaced	Vertical flat spaced	3 cables trefoil
1	2	3	4	5	6	7	8	9	10	11	12
(mm^2)	(A)	(A)	(A)	(A)	(A)	(A)	(A)	(A)	(A)	(A)	(A)
50	143	133	152	141	168	159	167	157	169	155	131
70	183	168	194	178	212	200	214	202	213	196	168
95	221	202	234	214	259	245	261	247	255	236	205
120	255	233	270	246	299	285	303	288	293	272	238
150	294	267	310	282	340	323	349	333	335	312	275
185	334	303	352	319	389	371	400	382	379	354	315
240	393	354	413	374	457	437	472	452	443	415	372
300	452	405	474	427	520	498	545	523	505	475	430
380	518	452	543	479	583	559	638	613	551	518	497
480	586	501	616	534	655	629	742	715	604	568	568
600	658	550	692	589	724	696	859	828	656	618	642
740	728	596	769	642	802	770	986	952	707	666	715
960	819	651	868	706	866	832	1171	1133	770	726	808
1200	893	692	952	756	938	902	1360	1317	822	774	880

NOTE:
Where the conductor is to be protected by a semi-enclosed fuse to BS 3036, see item 6.2 of the preface to this appendix.

COPYRIGHT

TABLE 4K3B

VOLTAGE DROP (per ampere per metre):

Conductor operating temperature: 70°C

Conductor cross-sectional area	2 cables, d.c.	2 cables, single-phase a.c.						3 or 4 cables, three-phase a.c.								
		Reference Methods 1 & 11 (touching)			Reference Method 12 (spaced*)			Reference Methods 1, 11 and 12 (in trefoil touching)			Reference Methods 1 & 11 (flat and touching)			Reference Method 12 (flat spaced*)		
1	2	3			4			5			6			7		
(mm²)	(mV/A/m)	(mV/A/m)			(mV/A/m)			(mV/A/m)			(mV/A/m)			(mV/A/m)		
		r	x	z	r	x	z	r	x	z	r	x	z	r	x	z
50	1.55	1.55	0.23	1.55	1.55	0.31	1.55	1.35	0.195	1.35	1.35	0.27	1.35	1.30	0.34	1.35
70	1.05	1.05	0.22	1.10	1.05	0.30	1.10	0.92	0.190	0.93	0.93	0.26	0.96	0.95	0.33	1.00
95	0.77	0.78	0.21	0.81	0.81	0.29	0.86	0.68	0.185	0.70	0.70	0.25	0.75	0.73	0.32	0.80
120	0.61	0.62	0.21	0.66	0.65	0.29	0.71	0.54	0.180	0.57	0.57	0.25	0.62	0.60	0.32	0.68
150	0.49	0.50	0.20	0.54	0.53	0.28	0.60	0.44	0.175	0.47	0.46	0.24	0.52	0.50	0.31	0.58
185	0.39	0.41	0.195	0.45	0.44	0.28	0.52	0.35	0.170	0.39	0.38	0.24	0.45	0.42	0.30	0.51
240	0.30	0.32	0.190	0.37	0.34	0.27	0.44	0.28	0.165	0.32	0.30	0.23	0.38	0.33	0.29	0.44
300	0.24	0.26	0.185	0.32	0.28	0.26	0.39	0.22	0.160	0.27	0.24	0.23	0.34	0.28	0.29	0.40
380	0.190	0.22	0.185	0.28	0.26	0.25	0.36	0.185	0.155	0.24	0.22	0.22	0.32	0.27	0.26	0.38
480	0.150	0.180	0.180	0.25	0.22	0.25	0.33	0.155	0.155	0.22	0.195	0.22	0.29	0.24	0.25	0.35
600	0.120	0.150	0.175	0.23	0.195	0.24	0.31	0.130	0.150	0.200	0.170	0.21	0.27	0.21	0.24	0.32
740	0.097	0.135	0.170	0.22	0.180	0.23	0.29	0.115	0.145	0.185	0.160	0.20	0.26	0.200	0.22	0.30
960	0.075	0.115	0.160	0.200	0.165	0.21	0.27	0.100	0.140	0.175	0.150	0.185	0.24	0.190	0.195	0.27
1200	0.060	0.110	0.155	0.190	0.160	0.180	0.24	0.094	0.140	0.170	0.145	0.160	0.22	0.185	0.165	0.25

NOTE: * Spacings larger than those specified in Method 12 (see table 4A) will result in larger voltage drop.

COPYRIGHT

ALUMINIUM CONDUCTORS

TABLE 4K4A

Multicore armoured pvc-insulated cables
(ALUMINIUM CONDUCTORS)

CURRENT-CARRYING CAPACITY (amperes):

Ambient temperature: 30°C
Conductor operating temperature: 70°C

Conductor cross-sectional area	Reference Method 1 (clipped direct)		Reference Method 11 (on a perforated cable tray) or Reference Method 13 (free air)	
	1 two-core cable, single-phase a.c. or d.c.	1 three- or four-core cable, three-phase a.c.	1 two-core cable, single-phase a.c. or d.c.	1 three- or four-core cable, three-phase a.c.
1	2	3	4	5
(mm^2)	(A)	(A)	(A)	(A)
16	68	58	71	61
25	89	76	94	80
35	109	94	115	99
50	131	113	139	119
70	165	143	175	151
95	199	174	211	186
120	-	202	-	216
150	-	232	-	250
185	-	265	-	287
240	-	312	-	342
300	-	360	-	399

NOTE:
Where the conductor is to be protected by a semi-enclosed fuse to BS 3036, see item 6.2 of the preface to this appendix.

COPYRIGHT

TABLE 4K4B

VOLTAGE DROP (per ampere per metre): Conductor operating temperature: 70°C

Conductor cross-sectional area	Two-core cable, d.c.	Two-core cable, single-phase a.c.			Three- or four-core cable, three-phase a.c.		
1	2	3			4		
(mm²)	(mV/A/m)	(mV/A/m)			(mV/A/m)		
16	4.5	4.5			3.9		
		r	x	z	r	x	z
25	2.9	2.9	0.175	2.9	2.5	0.150	2.5
35	2.1	2.1	0.170	2.1	1.80	0.150	1.80
50	1.55	1.55	0.170	1.55	1.35	0.145	1.35
70	1.05	1.05	0.165	1.05	0.90	0.140	0.92
95	0.77	0.77	0.160	0.79	0.67	0.140	0.68
120	-	-	-	-	0.53	0.135	0.55
150	-	-	-	-	0.42	0.135	0.44
185	-	-	-	-	0.34	0.135	0.37
240	-	-	-	-	0.26	0.130	0.30
300	-	-	-	-	0.21	0.130	0.25

COPYRIGHT

ALUMINIUM CONDUCTORS

TABLE 4L1A

Single-core cables having thermosetting insulation, non-armoured, with or without sheath (ALUMINIUM CONDUCTORS)

CURRENT-CARRYING CAPACITY (amperes):

Ambient temperature: 30°C
Conductor operating temperature: 90°C

Conductor cross-sectional area	Reference Method 4 (enclosed in conduit in thermally insulating wall etc.)		Reference Method 3 (enclosed in conduit on a wall or in trunking etc.)		Reference Method 1 (clipped direct)		Reference Method 11 (on a perforated cable tray horizontal or vertical)		Reference Method 12 (free air)		
									Horizontal flat spaced	Vertical flat spaced	Trefoil
	2 cables, single-phase a.c. or d.c.	3 or 4 cables, three-phase a.c.	2 cables, single-phase a.c. or d.c.	3 or 4 cables, three-phase a.c.	2 cables, single-phase a.c. or d.c. flat and touching	3 or 4 cables, three-phase a.c. flat and touching or trefoil	2 cables, single-phase a.c. or d.c. flat and touching	3 or 4 cables, three-phase a.c. flat and touching or trefoil	2 cables, single-phase a.c. or d.c. or 3 cables, three-phase a.c.	2 cables, single-phase a.c. or d.c. or 3 cables, three-phase a.c.	3 cables trefoil, three-phase a.c.
1	2	3	4	5	6	7	8	9	10	11	12
(mm^2)	(A)	(A)	(A)	(A)	(A)	(A)	(A)	(A)	(A)	(A)	(A)
50	125	113	157	140	169	149	180	165	210	188	159
70	158	142	200	179	215	189	231	211	271	244	206
95	191	171	242	217	265	234	281	258	332	300	253
120	220	197	281	251	308	273	326	300	387	351	296
150	253	226	-	-	353	314	376	346	448	408	343
185	288	256	-	-	410	366	430	396	515	470	395
240	338	300	-	-	489	438	509	469	611	561	471
300	387	344	-	-	564	507	586	541	708	652	544
380	-	-	-	-	658	594	679	628	798	742	638
480	-	-	-	-	765	692	786	728	927	865	743
600	-	-	-	-	871	791	903	836	1058	990	849
740	-	-	-	-	1001	911	1025	951	1218	1143	979
960	-	-	-	-	1176	1072	1191	1108	1440	1355	1151
1200	-	-	-	-	1333	1217	1341	1249	1643	1550	1307

NOTES:

1. **Where the conductor is to be protected by a semi-enclosed fuse to BS 3036, see item 6.2 of the preface to this appendix.**
2. Where a conductor operates at a temperature exceeding 70°C it shall be ascertained that the equipment connected to the conductor is suitable for the conductor operating temperature.
3. Where cables in this table are connected to equipment or accessories designed to operate at a temperature not exceeding 70°C, the current ratings given in the equivalent table for 70°C pvc insulated cables (BS 6004, BS 6346) shall be used.

COPYRIGHT

TABLE 4L1B

VOLTAGE DROP (per ampere per metre): Conductor operating temperature: 90°C

Conductor cross-sectional area	2 cables, d.c.	2 cables, single-phase a.c.									3 or 4 cables, three-phase a.c.									
		Reference Methods 3 & 4 (enclosed in conduit etc. in or on a wall)			Reference Methods 1 & 11 (clipped direct or on trays, touching)			Reference Method 12 (spaced*)			Reference Methods 3 & 4 (enclosed in conduit etc. in or on a wall)			Reference Methods 1, 11 & 12 (in trefoil)			Reference Methods 1 & 11 (flat and touching)			Reference Method 12 (flat spaced*)		
1	2	3			4			5			6			7			8			9		
(mm²)	(mV/A/m)	(mV/A/m)			(mV/A/m)			(mV/A/m)			(mV/A/m)			(mV/A/m)			(mV/A/m)			(mV/A/m)		
		r	x	z	r	x	z	r	x	z	r	x	z	r	x	z	r	x	z	r	x	z
50	1.65	1.70	0.30	1.72	1.65	0.190	1.66	1.65	0.28	1.68	1.44	0.26	1.46	1.44	0.165	1.45	1.44	0.24	1.46	1.44	0.32	1.48
70	1.13	1.17	0.30	1.21	1.12	0.185	1.14	1.12	0.27	1.15	1.00	0.26	1.04	0.97	0.160	0.98	0.97	0.24	1.00	0.97	0.31	1.02
95	0.82	0.86	0.29	0.91	0.82	0.185	0.84	0.82	0.27	0.94	0.75	0.25	0.79	0.71	0.160	0.73	0.71	0.23	0.75	0.71	0.31	0.78
120	0.65	0.68	0.29	0.74	0.65	0.180	0.67	0.65	0.27	0.70	0.59	0.25	0.64	0.57	0.155	0.59	0.57	0.23	0.61	0.57	0.31	0.64
150	0.53	0.54	0.28	0.61	0.52	0.175	0.55	0.52	0.26	0.58	0.48	0.24	0.54	0.45	0.155	0.47	0.45	0.23	0.50	0.45	0.30	0.54
185	0.42	0.45	0.28	0.53	0.43	0.175	0.46	0.42	0.26	0.49	0.38	0.24	0.45	0.36	0.150	0.39	0.36	0.23	0.43	0.36	0.30	0.47
240	0.32	0.34	0.27	0.43	0.32	0.170	0.36	0.32	0.26	0.41	0.30	0.24	0.38	0.28	0.150	0.32	0.28	0.22	0.35	0.28	0.30	0.41
300	0.26	0.28	0.27	0.38	0.26	0.170	0.31	0.26	0.26	0.36	0.25	0.23	0.34	0.22	0.145	0.27	0.22	0.22	0.31	0.22	0.30	0.37
380	0.20	-	-	-	0.21	0.165	0.27	0.21	0.25	0.33	0.20	0.23	0.31	0.180	0.145	0.23	0.180	0.22	0.28	0.180	0.29	0.34
480	0.160	-	-	-	0.170	0.165	0.23	0.165	0.25	0.30	0.165	0.23	0.28	0.150	0.140	0.20	0.150	0.22	0.27	0.145	0.29	0.32
600	0.130	-	-	-	0.140	0.160	0.21	0.135	0.25	0.28	0.135	0.22	0.26	0.120	0.140	0.185	0.120	0.22	0.25	0.120	0.29	0.31
740	0.105	-	-	-	0.115	0.160	0.19	0.110	0.25	0.27	-	-	-	0.100	0.135	0.170	0.100	0.21	0.23	0.095	0.29	0.30
960	0.080	-	-	-	0.092	0.155	0.18	0.087	0.24	0.26	-	-	-	0.082	0.135	0.160	0.082	0.21	0.23	0.076	0.29	0.30
1200	0.064	-	-	-	0.079	0.155	0.17	0.073	0.24	0.25	-	-	-	0.070	0.135	0.150	0.070	0.21	0.22	0.063	0.28	0.29

NOTE: * Spacings larger than those specified in Method 12 (see table 4A) will result in larger voltage drop.

COPYRIGHT

ALUMINIUM CONDUCTORS

TABLE 4L2A

Multicore cables having thermosetting insulation, non-armoured (ALUMINIUM CONDUCTORS)

CURRENT-CARRYING CAPACITY (amperes):

Ambient temperature: 30°C
Conductor operating temperature: 90°C

Conductor cross-sectional area	Reference Method 4 (enclosed in an insulated wall etc.)		Reference Method 3 (enclosed in conduit on a wall or ceiling, or in trunking)		Reference Method 1 (clipped direct)		Reference Method 11 (on a perforated cable tray) or Reference Method 13 (free air)	
	1 two-core cable, single-phase a.c. or d.c.	1 three- or four-core cable, three-phase a.c.	1 two-core cable, single-phase a.c. or d.c.	1 three- or four-core cable, three-phase a.c.	1 two-core cable, single-phase a.c. or d.c.	1 three- or four-core cable, three-phase a.c.	1 two-core cable, single-phase a.c. or d.c.	1 three- or four-core cable, three-phase a.c.
I	2	3	4	5	6	7	8	9
(mm^2)	(A)	(A)	(A)	(A)	(A)	(A)	(A)	(A)
16	60	55	72	64	84	76	91	77
25	78	71	94	84	101	90	108	97
35	96	87	115	103	126	112	135	120
50	115	104	138	124	154	136	164	146
70	145	131	175	156	198	174	211	187
95	175	157	210	188	241	211	257	227
120	-	180	-	216	-	245	-	263
150	-	206	-	240	-	283	-	304
185	-	233	-	272	-	323	-	347
240	-	273	-	318	-	382	-	409
300	-	313	-	364	-	440	-	471

NOTES:

1. **Where the conductor is to be protected by a semi-enclosed fuse to BS 3036, see item 6.2 of the preface to this appendix.**
2. Where a conductor operates at a temperature exceeding 70°C it shall be ascertained that the equipment connected to the conductor is suitable for the conductor operating temperature.
3. Where cables in this table are connected to equipment or accessories designed to operate at a temperature not exceeding 70°C, the current ratings given in the equivalent table for 70°C pvc insulated cables (BS 6004, BS 6346) shall be used.

COPYRIGHT

TABLE 4L2B

VOLTAGE DROP (per ampere per metre): Conductor operating temperature: 90°C

Conductor cross-sectional area	Two-core cable, d.c.	Two-core cable, single-phase a.c.			Three- or four-core cable, three-phase a.c.		
1	2	3			4		
(mm²)	(mVA/m)	(mV/A/m)			(mV/A/m)		
16	4.8	4.8			4.2		
		r	x	z	r	x	z
25	3.1	3.1	0.165	3.1	2.7	0.140	2.7
35	2.2	2.2	0.160	2.2	1.90	0.140	1.95
50	1.60	1.65	0.160	1.65	1.40	0.135	1.45
70	1.10	1.10	0.155	1.15	0.96	0.135	0.97
95	0.82	0.82	0.150	0.84	0.71	0.130	0.72
120	-	-	-	-	0.56	0.130	0.58
150	-	-	-	-	0.45	0.130	0.47
185	-	-	-	-	0.37	0.130	0.39
240	-	-	-	-	0.28	0.125	0.31
300	-	-	-	-	0.23	0.125	0.26

COPYRIGHT

ALUMINIUM CONDUCTORS

TABLE 4L3A

Single-core cables having thermosetting insulation (non-magnetic armour)
(ALUMINIUM CONDUCTORS)

CURRENT-CARRYING CAPACITY (amperes):

Ambient temperature: 30°C
Conductor operating temperature: 90°C

	Reference Method 1 (clipped direct)		Reference Method 11 (on a perforated cable tray)		Reference Method 12 (free air)						
					2 cables, single-phase a.c.		2 cables, d.c.		3 or 4 cables, three-phase a.c.		
Conductor cross-sectional area	2 cables, single-phase a.c. or d.c., flat and touching	3 or 4 cables, three-phase a.c., flat and touching	2 cables, single-phase a.c. or d.c., flat and touching	3 or 4 cables, three-phase a.c., flat and touching	Horizontal flat spaced	Vertical flat spaced	Horizontal spaced	Vertical spaced	Horizontal flat spaced	Vertical flat spaced	3 cables trefoil
1	2	3	4	5	6	7	8	9	10	11	12
(mm^2)	(A)	(A)	(A)	(A)	(A)	(A)	(A)	(A)	(A)	(A)	(A)
50	179	165	192	176	212	199	216	197	215	192	162
70	228	209	244	222	269	254	275	253	270	244	207
95	276	252	294	267	328	310	332	307	324	296	252
120	320	291	340	308	378	358	384	357	372	343	292
150	368	333	390	352	429	409	441	411	424	394	337
185	419	378	444	400	490	467	511	480	477	447	391
240	494	443	521	468	576	549	605	572	554	523	465
300	568	508	597	536	654	624	701	666	626	595	540
380	655	573	688	608	735	704	812	780	639	649	625
480	747	642	786	685	825	790	942	906	765	717	714
600	836	706	880	757	909	872	1076	1036	832	780	801
740	934	764	988	824	989	950	1250	1205	890	835	897
960	1056	838	1121	911	1094	1052	1488	1435	970	911	1014
1200	1163	903	1236	990	1187	1141	1715	1658	1043	980	1118

NOTES:

1. **Where the conductor is to be protected by a semi-enclosed fuse to BS 3036, see item 6.2 of the preface to this appendix.**
2. Where a conductor operates at a temperature exceeding 70°C it shall be ascertained that the equipment connected to the conductor is suitable for the conductor operating temperature .
3. Where cables in this table are connected to equipment or accessories designed to operate at a temperature not exceeding 70°C, the current ratings given in the equivalent table for 70°C pvc insulated cables (BS 6004, BS 6346) shall be used .

COPYRIGHT

TABLE 4L3B

VOLTAGE DROP (per ampere per metre): Conductor operating temperature: 90°C

Conductor cross-sectional area	2 cables, d.c.	2 cables, single-phase a.c.						3 or 4 cables, three-phase a.c.								
		Reference Methods 1 & 11 (touching)			Reference Method 12 (spaced*)			Reference Methods 1, 11 & 12 (in trefoil touching)			Reference Methods 1 & 11 (flat and touching)			Reference Method 12 (flat spaced*)		
1	2	3			4			5			6			7		
(mm²)	(mV/A/m)	(mV/A/m)			(mV/A/m)			(mV/A/m)			(mV/A/m)			(mV/A/m)		
		r	x	z	r	x	z	r	x	z	r	x	z	r	x	z
50	1.60	1.60	0.22	1.60	1.60	0.30	1.60	1.40	0.185	1.40	1.40	0.26	1.40	1.35	0.34	1.40
70	1.10	1.10	0.21	1.15	1.10	0.29	1.15	0.96	0.180	0.98	0.97	0.25	1.00	0.99	0.33	1.05
95	0.82	0.83	0.20	0.85	0.85	0.29	0.90	0.71	0.175	0.74	0.74	0.25	0.78	0.76	0.32	0.83
120	0.66	0.66	0.20	0.69	0.69	0.28	0.74	0.57	0.170	0.60	0.60	0.24	0.64	0.63	0.31	0.70
150	0.52	0.53	0.195	0.57	0.56	0.28	0.62	0.46	0.170	0.49	0.49	0.24	0.54	0.52	0.30	0.60
185	0.42	0.43	0.190	0.47	0.46	0.27	0.54	0.38	0.165	0.41	0.40	0.24	0.47	0.44	0.30	0.53
240	0.32	0.34	0.185	0.39	0.37	0.27	0.45	0.29	0.160	0.34	0.32	0.23	0.39	0.35	0.29	0.46
300	0.26	0.27	0.185	0.33	0.30	0.26	0.40	0.24	0.160	0.29	0.26	0.23	0.34	0.29	0.29	0.41
380	0.21	0.23	0.180	0.29	0.26	0.25	0.36	0.195	0.155	0.25	0.23	0.22	0.32	0.27	0.27	0.38
480	0.160	0.185	0.175	0.25	0.23	0.25	0.34	0.160	0.155	0.22	0.20	0.21	0.29	0.24	0.26	0.35
600	0.130	0.160	0.175	0.24	0.20	0.24	0.31	0.135	0.150	0.20	0.175	0.21	0.27	0.22	0.25	0.33
740	0.105	0.140	0.170	0.22	0.190	0.22	0.29	0.120	0.145	0.190	0.165	0.195	0.26	0.21	0.22	0.30
960	0.080	0.120	0.160	0.20	0.170	0.21	0.27	0.105	0.140	0.175	0.150	0.180	0.24	0.195	0.195	0.28
1200	0.064	0.105	0.160	0.190	0.155	0.20	0.25	0.093	0.135	0.165	0.140	0.175	0.22	0.180	0.185	0.26

NOTE: * Spacings larger than those specified in Method 12 (see table 4A) will result in larger voltage drop.

COPYRIGHT

ALUMINIUM CONDUCTORS

TABLE 4L4A

Multicore armoured cables having thermosetting insulation (ALUMINIUM CONDUCTORS)

CURRENT-CARRYING CAPACITY (amperes): Ambient temperature: 30°C
Conductor operating temperature: 90°C

Conductor cross-sectional area	Reference Method 1 (clipped direct)		Reference Method 11 (on a perforated cable tray) or Reference Method 13 (free air)	
	1 two-core cable, single-phase a.c. or d.c.	1 three- or four-core cable, three-phase a.c.	1 two-core cable, single-phase a.c. or d.c.	1 three- or four-core cable, three-phase a.c.
1	2	3	4	5
(mm^2)	(A)	(A)	(A)	(A)
16	82	71	85	74
25	108	92	112	98
35	132	113	138	120
50	159	137	166	145
70	201	174	211	185
95	242	214	254	224
120	-	249	-	264
150	-	284	-	305
185	-	328	-	350
240	-	386	-	418
300	-	441	-	488

NOTES:

1. **Where the conductor is to be protected by a semi-enclosed fuse to BS 3036, see item 6.2 of the preface to this appendix.**
2. Where a conductor operates at a temperature exceeding 70°C it shall be ascertained that the equipment connected to the conductor is suitable for the conductor operating temperature.
3. Where cables in this table are connected to equipment or accessories designed to operate at a temperature not exceeding 70°C, the current ratings given in the equivalent table for 70°C pvc insulated cables (BS 6004, BS 6346) shall be used.

COPYRIGHT

TABLE 4L4B

VOLTAGE DROP (per ampere per metre): Conductor operating temperature: 90°C

Conductor cross-sectional area	Two-core cable, d.c.	Two-core cable, single-phase a.c.			Three- or four-core cable, three-phase a.c.		
1	2	3			4		
(mm^2)	(mV/A/m)	(mV/A/m)			(mV/A/m)		
16	4.8	4.8			4.2		
		r	x	z	r	x	z
25	3.1	3.1	0.165	3.1	2.7	0.140	2.7
35	2.2	2.2	0.160	2.2	1.90	0.140	1.95
50	1.60	1.65	0.160	1.65	1.40	0.135	1.45
70	1.10	1.10	0.155	1.15	0.96	0.135	0.97
95	0.82	0.82	0.150	0.84	0.71	0.130	0.72
120	-	-	-	-	0.56	0.130	0.58
150	-	-	-	-	0.45	0.130	0.47
185	-	-	-	-	0.37	0.130	0.39
240	-	-	-	-	0.28	0.125	0.31
300	-	-	-	-	0.23	0.125	0.26

COPYRIGHT

Appendix 5(L)
(informative)

Classification of external influences

This Appendix gives the classification and codification of external influences.

NOTE 1 – The Appendix is an extract from IEC 60364-5-51 (Electrical installations of buildings - Part 5-51: Selection and erection of electrical equipment - Common rules).

Each condition of external influence is designated by a code comprising a group of two capital letters and a number, as follows:

The first letter relates to the general category of external influence:

A Environment
B Utilisation
C Construction of buildings

The second letter relates to the nature of the external influence:

... A
... B
... C

The number relates to the class within each external influence:

... ... 1
... ... 2
... ... 3

For example, the code AA4 signifies:

A = Environment
AA = Environment - Ambient temperature
AA4 = Environment - Ambient temperature in the range of -5 °C to +40 °C.

NOTE 2 – The codification given in this Appendix is not intended to be used for marking equipment.

COPYRIGHT

Concise list of external influences

ENVIRONMENT

A	**AA**	**Ambient (°C)**		**AF**	**Corrosion**	AM8	Radiated magnetic fields
	AA1	-60 °C	+5 °C	AF1	Negligible	AM9	Electric fields
	AA2	-40 °C	+5 °C	AF2	Atmospheric	AM21	High-frequency etc...
	AA3	-25 °C	+5 °C	AF3	Intermittent	AM22	Conducted...nano...
	AA4	-5 °C	+40 °C	AF4	Continuous	AM23	Conducted...micro...
	AA5	+5 °C	+40 °C			AM24	Conducted oscillatory...
	AA6	+5 °C	+60 °C	**AG**	**Impact**	AM25	Radiated HF
	AA7	-25 °C	+55 °C	AG1	Low	AM31	Electrostatic discharges
	AA8	-50 °C	+40 °C	AG2	Medium	AM41	Ionisation
				AG3	High		
	AB	**Temperature and Humidity**				**AN**	**Solar**
				AH	**Vibration**	AN1	Low
	AC	**Altitude (metres)**		AH1	Low	AN2	Medium
	AC1	< 2000 metres		AH2	Medium	AN3	High
	AC2	> 2000 metres		AH3	High		
						AP	**Seismic**
	AD	**Water**		**AJ**	**Other mechanical stresses**	AP1	Negligible
	AD1	Negligible				AP2	Low
	AD2	Drops		**AK**	**Flora**	AP3	Medium
	AD3	Sprays		AK1	No hazard	AP4	High
	AD4	Splashes		AK2	Hazard		
	AD5	Jets				**AQ**	**Lightning**
	AD6	Waves		**AL**	**Fauna**	AQ1	Negligible
	AD7	Immersion		AL1	No hazard	AQ2	Indirect
	AD8	Submersion		AL2	Hazard	AQ3	Direct
	AE	**Foreign bolides**		**AM**	**Electromagnetic**	**AR**	**Movement of air**
	AE1	Negligible		AM1	Level	AR1	Low
	AE2	Small		AM2	Signalling voltages	AR2	Medium
	AE3	Very small		AM3	Voltage amplitude variations	AR3	High
	AE4	Light dust		AM4	Voltage unbalance		
	AE5	Moderate dust		AM5	Power frequency variations	**AS**	**Wind**
	AE6	Heavy dust		AM6	Induced low-frequency voltage	AS1	Low
				AM7	DC current in AC network	AS2	Medium
						AS3	High

UTILISATION

B	**BA**	**Capability**	**BC**	**Contact with Earth**	**BE**	**Materials**
	BA1	Ordinary	BC1	None	BE1	No risk
	BA2	Children	BC2	Low	BE2	Fire risk
	BA3	Handicapped	BC3	Frequent	BE3	Explosion risk
	BA4	Instructed	BC4	Continuous	BE4	Contamination risk
	BA5	Skilled				
			BD	**Evacuation**		
	BB	**Resistance**	BD1	Normal		
			BD2	Difficult		
			BD3	Crowded		
			BD4	Difficult and crowded		

BUILDING

C	**CA**	**Materials**	**CB**	**Structure**
	CA1	Non-combustible	CB1	Negligible
	CA2	Combustible	CB2	Fire propagation
			CB3	Structural movement
			CB4	Flexible

COPYRIGHT

A ENVIRONMENT:

Code	External influences	Characteristics required for selection and erection of equipment	Reference for information only
A	**Environmental conditions**		
AA	Ambient temperature The ambient temperature is that of the ambient air where the equipment is to be installed. It is assumed that the ambient temperature includes the effects of other equipment installed in the same location. The ambient temperature to be considered for the equipment is the temperature at the place where the equipment is to be installed resulting from the influence of all other equipment in the same location, when operating, not taking into account the thermal contribution of the equipment to be installed. Lower and upper limits of ranges of ambient temperature:		
AA1	–60 °C +5 °C		Includes temperature range of IEC 60721-3-3, class 3K8, with high air temperature restricted to +5 °C. Part of temperature range of IEC 60721-3-4, class 4K4, with low air temperature restricted to –60 °C and high air temperature restricted to +5 °C
AA2	–40 °C +5 °C	Specially designed equipment or appropriate arrangements[a]	Part of temperature range of IEC 60721-3-3, class 3K7, with high air temperature restricted to +5 °C. Includes part of temperature range of IEC 60721-3-4, class 4K3, with high air temperature restricted to +5 °C
AA3	–25 °C +5 °C		Part of temperature range of IEC 60721-3-3, class 3K6, with high air temperature restricted to +5 °C. Includes temperature range of IEC 60721-3-4, class 4K1, with high air temperature restricted to +5 °C
AA4	–5 °C +40 °C	Normal (in certain cases special precautions may be necessary)	Part of temperature range of IEC 60721-3-3, class 3K5, with high air temperature restricted to +40 °C
AA5	+5 °C +40 °C	Normal[b]	Identical to temperature range of IEC 60721-3-3, class 3K3
a	May necessitate certain supplementary precautions (e.g. special lubrication).		
b	This means that ordinary equipment will operate safely under the described external influences.		
c	This means that special arrangements should be made, for example, between the designer of the installation and the equipment manufacturer, e.g. for specially designed equipment.		

COPYRIGHT

A ENVIRONMENT (cont'd)

<table>
<tr><th>Code</th><th>External influences</th><th>Characteristics required for selection and erection of equipment</th><th>Reference for information only</th></tr>
<tr><td>AA6</td><td>+5 °C + 60 °C</td><td>Specially designed equipment or appropriate arrangements[a]</td><td>Part of temperature range of IEC 60721-3-3, class 3K7, with low air temperature restricted to +5 °C and high air temperature restricted to +60 °C. Includes temperature range of IEC 60721-3-4, class 4K4 with low air temperature restricted to +5 °C.</td></tr>
<tr><td>AA7</td><td>–25 °C + 55 °C</td><td rowspan="2">Specially designed equipment or appropriate arrangements[a]</td><td>– Identical to temperature range of IEC 60721-3-3, class 3K6.</td></tr>
<tr><td>AA8</td><td>–50 °C + 40 °C

Ambient temperature classes are applicable only where humidity has no influence.

The average temperature over a 24 h period must not exceed 5 °C below the upper limits.

Combination of two ranges to define some environments may be necessary.
Installations subject to temperatures outside the ranges require special consideration.</td><td>– Identical to temperature range of IEC 60721-3-4, class 4K3.</td></tr>
<tr><td>AB</td><td colspan="2">Atmospheric humidity</td><td colspan="2"></td><td colspan="2"></td><td></td><td></td></tr>
<tr><td></td><td>Air temperature
°C
a) low
b) high</td><td colspan="2">Relative humidity
%
c) low
d) high</td><td colspan="2">Absolute humidity
g/m³
e) low
f) high</td><td></td><td></td></tr>
<tr><td>AB1</td><td>–60</td><td>+5</td><td>3</td><td>100</td><td>0.003</td><td>7</td><td>Indoor and outdoor locations with extremely low ambient temperatures.

Appropriate arrangements should be made[c]</td><td>Includes temperature range of IEC 60721-3-3, class 3K8, with high air temperature restricted to +5 °C. Part of temperature range of IEC 60721-3-4, class 4K4, with low air temperature restricted to – 60 °C and high air temperature restricted to +5 °C.</td></tr>
<tr><td>AB2</td><td>–40</td><td>+5</td><td>10</td><td>100</td><td>0.1</td><td>7</td><td>Indoor and outdoor locations with low ambient temperatures.

Appropriate arrangements should be made[c]</td><td>Part of temperature range of IEC 60721-3-3, class 3K7, with high temperature restricted to +5 °C. Part of temperature range of IEC 60721-3-4, class 4K4, with low air temperature restricted to – 40°C and high air temperature restricted to +5 °C.</td></tr>
<tr><td>a</td><td colspan="8">May necessitate certain supplementary precautions (e.g. special lubrication).</td></tr>
<tr><td>b</td><td colspan="8">This means that ordinary equipment will operate safely under the described external influences.</td></tr>
<tr><td>c</td><td colspan="8">This means that special arrangements should be made, for example, between the designer of the installation and the equipment manufacturer, e.g. for specially designed equipment.</td></tr>
</table>

COPYRIGHT

A ENVIRONMENT (cont'd)

Code	External influences						Characteristics required for selection and erection of equipment	Reference for information only
	Air temperature °C a) low b) high		Relative humidity % c) low d) high		Absolute humidity g/m^3 e) low f) high			
AB3	–25	+5	10	100	0.5	7	Indoor and outdoor locations with low ambient temperatures. Appropriate arrangements should be made[c]	Part of temperature range of IEC 60721-3-3, class 3K6, with high air temperature restricted to +5 °C. Includes temperature range of IEC 60721-3-4, class 4K1, with high air temperature range restricted to +5 °C.
AB4	–5	+40	5	95	1	29	Weather protected locations having neither temperature nor humidity control. Heating may be used to raise low ambient temperatures. Normal[b]	Identical with temperature range of IEC 60721-3-3, class 3K5. The high air temperature restricted to +40 °C.
AB5	+5	+40	5	85	1	25	Weather protected locations with temperature control. Normal[b]	Identical with temperature range of IEC 60721-3-3, class 3K3.
AB6	+5	+60	10	100	1	35	Indoor and outdoor locations with extremely high ambient temperatures, influence of cold ambient temperatures is prevented. Occurrence of solar and heat radiation. Appropriate arrangements should be made[c]	Part of temperature range of IEC 60721-3-3, class 3K7, with low air temperature restricted to +5 °C and high air temperature restricted to +60 °C. Includes temperature range of IEC 60721-3-4, class 4K4, with low air temperature restricted to +5 °C.
AB7	–25	+55	10	100	0.5	29	Indoor weather protected locations having neither temperature nor humidity control, the locations may have openings directly to the open air and be subjected to solar radiation. Appropriate arrangements must be made[c]	Identical to temperature range of IEC 60721-3-3, class 3K6.
AB8	–50	+40	15	100	0.04	36	Outdoor and non-weather protected locations, with low and high temperatures. Appropriate arrangements should be made[c]	Identical to temperature range of IEC 60721-3-4, class 4K3.
a	May necessitate certain supplementary precautions (e.g. special lubrication).							
b	This means that ordinary equipment will operate safely under the described external influences.							
c	This means that special arrangements should be made, for example, between the designer of the installation and the equipment manufacturer, e.g. for specially designed equipment.							

COPYRIGHT

A ENVIRONMENT (cont'd)

Code	External influences	Characteristics required for selection and erection of equipment	Reference for information only
AC	**Altitude**		
AC1	≤2 000 m	Normal[b]	
AC2	>2 000 m	May necessitate special precautions such as the application of derating factors. **NOTE:** For some equipment special arrangements may be necessary at altitudes of 1,000 m and above	
AD	**Presence of water**		
AD1	Negligible	IPX0 Outdoor and non-weather protected locations, with low and high temperatures.	IEC 60721-3-4, class 4Z6
AD2	Free-falling drops	IPX1 or IPX2 Location in which water vapour occasionally condenses as drops or where steam may occasionally be present.	IEC 60721-3-3, class 3Z7
AD3	Sprays	IPX3 Locations in which sprayed water forms a continuous film on floors and/or walls.	IEC 60721-3-3, class 3Z8 IEC 60721-3-4, class 4Z7
AD4	Splashes	IPX4 Locations where equipment may be subjected to splashed water; this applies, for example, to certain external luminaires, construction site equipment.	IEC 60721-3-3, class 3Z9 IEC 60721-3-4, class 4Z7
AD5	Jets	IPX5 Locations where hose water is used regularly (yards, carwashing bays).	IEC 60721-3-3, class 3Z10 IEC 60721-3-4, class 4Z8
AD6	Waves	IPX6 Seashore locations such as piers, beaches, quays, etc.	IEC 60721-3-4, class 4Z9
AD7	Immersion	IPX7 Locations which may be flooded and/or where water may be at maximum 150 mm above the highest point of equipment, the lowest part of equipment being not more than 1 m below the water surface.	
AD8	Submersion	IPX8 Locations such as swimming pools where electrical equipment is permanently and totally covered with water under a pressure greater than 0.1 bar.	
a	May necessitate certain supplementary precautions (e.g. special lubrication).		
b	This means that ordinary equipment will operate safely under the described external influences.		
c	This means that special arrangements should be made, for example, between the designer of the installation and the equipment manufacturer, e.g. for specially designed equipment.		

COPYRIGHT

A ENVIRONMENT (cont'd)

Code	External influences	Characteristics required for selection and erection of equipment	Reference for information only
AE	**Presence of foreign solid bodies**	IPXX see also Section 416	
AE1	Negligible	IP0X	IEC 60721-3-3, class 3S1 IEC 60721-3-4, class 4S1
AE2	Small objects (2.5 mm)	IP3X Tools and small objects are examples of foreign solid bodies of which the smallest dimension is at least 2.5 mm.	IEC 60721-3-3, class 3S2 IEC 60721-3-4, class 4S2
AE3	Very small objects (1 mm)	IP4X Wires are examples of foreign solid bodies of which the smallest dimension is not less than 1 mm.	IEC 60721-3-3, class 3S3 IEC 60721-3-4, class 4S3
AE4	Light dust	IP5X if dust penetration is not harmful to the functioning of the equipment. IP6X if dust should not penetrate equipment.	IEC 60721-3-3, class 3S2 IEC 60721-3-4, class 4S2 IEC 60721-3-3, class 3S3 IEC 60721-3-4, class 4S3
AE5	Moderate dust		
AE6	Heavy dust	IP6X	IEC 60721-3-3, class 3S4 IEC 60721-3-4, class 4S4
AF	**Presence of corrosive and polluting substances**		
AF1	Negligible	Normal[b]	IEC 60721-3-3, class 3C1 IEC 60721-3-4, class 4C1
AF2	Atmospheric	According to the nature of substances (for example, satisfaction of salt mist test according to IEC 60068-2-11). Installations situated by the sea or near industrial zones producing serious atmospheric pollution, such as chemical works, cement works; this type of pollution arises especially in the production of abrasive, insulating or conductive dusts.	IEC 60721-3-3, class 3C2 IEC 60721-3-4, class 4C2
AF3	Intermittent or accidental	Protection against corrosion according to equipment specification. Locations where some chemical products are handled in small quantities and where these products may come only accidentally into contact with electrical equipment; such conditions are found in factory laboratories, other laboratories or in locations where hydrocarbons are used (boiler-rooms, garages, etc.).	IEC 60721-3-3, class 3C3 IEC 60721-3-4, class 4C3
AF4	Continuous	Equipment specially designed according to the nature of substances. For example, chemical works.	IEC 60721-3-3, class 3C4 IEC 60721-3-4, class 4C4
AG	**Mechanical stress impact**		

COPYRIGHT

Code	External influences	Characteristics required for selection and erection of equipment	Reference for information only
AG1	Low severity	Normal, e.g. household and similar equipment.	IEC 60721-3-3, classes 3M1/3M2/3M3 IEC 60721-3-4, classes 4M1/4M2/4M3
AG2	Medium severity	Standard industrial equipment, where applicable, or reinforced protection	IEC 60721-3-3, classes 3M4/3M5/3M6 IEC 60721-3-4, classes 4M4/4M5/4M6
AG3	High severity	Reinforced protection	IEC 60721-3-3, classes 3M7/3M8 IEC 60721-3-4, classes 4M7/4M8
a	May necessitate certain supplementary precautions (e.g. special lubrication).		
b	This means that ordinary equipment will operate safely under the described external influences.		
c	This means that special arrangements should be made, for example, between the designer of the installation and the equipment manufacturer, e.g. for specially designed equipment.		

COPYRIGHT

A ENVIRONMENT (cont'd)

Code	External influences	Characteristics required for selection and erection of equipment	Reference for information only
AH	**Vibration**		
AH1	Low severity	Normal[b]	IEC 60721-3-3, classes 3M1/3M/3M3 IEC 60721-3-4, classes 4M1/4M2/4M3
AH2	Medium severity	Usual industrial conditions Specially designed equipment or special arrangements	IEC 60721-3-3, classes 3M4/3M5/3M6 IEC 60721-3-4, classes 4M4/4M5/4M6
AH3	High severity	Industrial installations subject to severe conditions	IEC 60721-3-3, classes 3M7/3M8 IEC 60721-3-4, classes 4M7/4M8
AJ	**Other mechanical stresses**	Under consideration	
AK	**Presence of flora and/or mould growth**		
AK1	No hazard	Normal[b]	IEC 60721-3-3, class 3B1 IEC 60721-3-4, class 4B1
AK2	Hazard	The hazard depends on local conditions and the nature of flora. Distinction should be made between harmful growth of vegetation or conditions for promotion of mould growth. Special protection, such as: – increased degree of protection (see AE) – special materials or protective coating of enclosures – arrangements to exclude flora from location.	IEC 60721-3-3, class 3B2 IEC 60721-3-4, class 4B2
AL	**Presence of fauna**		
AL1	No hazard	Normal[b]	IEC 60721-3-3, class 3B1 IEC 60721-3-4, class 4B1
AL2	Hazard	The hazard depends on the nature of the fauna. Distinction should be made between: – presence of insects in harmful quantity or of an aggressive nature – presence of small animals or birds in harmful quantity or of an aggressive nature. Protection may include: – an appropriate degree of protection against penetration of foreign solid bodies (see AE) – sufficient mechanical resistance (see AG) – precautions to exclude fauna from the location (such as cleanliness, use of pesticides) – special equipment or protective coating of enclosures.	IEC 60721-3-3, class 3B2 IEC 60721-3-4, class 4B2

a	May necessitate certain supplementary precautions (e.g. special lubrication).
b	This means that ordinary equipment will operate safely under the described external influences.
c	This means that special arrangements should be made, for example, between the designer of the installation and the equipment manufacturer, e.g. for specially designed equipment.

COPYRIGHT

A ENVIRONMENT (cont'd)

Code	External influences	Characteristics required for selection and erection of equipment	Reference for information only
AM	**Electromagnetic, electrostatic, or ionizing influences** **Low-frequency electromagnetic phenomena (conducted or radiated)** **Harmonics, interharmonics**		IEC 61000-2 series and IEC 61000-4 series
AM-1-1	Controlled level	Care should be taken that the controlled situation is not impaired.	Lower than Table 1 of IEC 61000-2-2
AM-1-2	Normal level	Special measures in the design of the installation, e.g. filters.	Complying with Table 1 of IEC 61000-2-2
AM-1-3	High level		Locally higher than Table 1 of IEC 61000-2-2
	Signalling voltages		
AM-2-1	Controlled level	Possibly: blocking circuits.	Lower than specified below
AM-2-2	Medium level	No additional requirement.	IEC 61000-2-1 and IEC 61000-2-2
AM-2-3	High level	Appropriate measures.	
	Voltage amplitude variations		
AM-3-1	Controlled level		
AM-3-2	Normal level	Compliance with *SS 555.*	
AM-4	**Voltage unbalance**		Compliance with IEC 61000-2-2
AM-5	**Power frequency variations**		±1 Hz according to IEC 61000-2-2
	Induced low-frequency voltages		
AM-6	No classification	Refer to *SS 555* High withstand of signal and control systems of switchgear and controlgear.	ITU-T
	Direct current in a.c. networks		
AM-7	No classification	Measures to limit their presence in level and time in the current-using equipment or their vicinity.	
	Radiated magnetic fields		
AM-8-1	Medium level	Normal[b]	Level 2 of IEC 61000-4-8
AM-8-2	High level	Protection by appropriate measures e.g. screening and/or separation.	Level 4 of IEC 61000-4-8
a	May necessitate certain supplementary precautions (e.g. special lubrication).		
b	This means that ordinary equipment will operate safely under the described external influences.		
c	This means that special arrangements should be made, for example, between the designer of the installation and the equipment manufacturer, e.g. for specially designed equipment.		

COPYRIGHT

A ENVIRONMENT (cont'd)

Code	External influences	Characteristics required for selection and erection of equipment	Reference for information only
	Electric fields		
AM-9-1	Negligible level	Normal[b]	
AM-9-2	Medium level	Refer to IEC 61000-2-5.	IEC 61000-2-5
AM-9-3	High level	Refer to IEC 61000-2-5.	
AM-9-4	Very high level	Refer to IEC 61000-2-5.	
	High-frequency electromagnetic phenomena conducted, induced or radiated (continuous or transient)		
	Induced oscillatory voltages or currents		
AM-21	No classification	Normal[b]	IEC 61000-4-6
	Conducted unidirectional transients of the nanosecond time scale		IEC 61000-4-4
AM-22-1	Negligible level	Protective measures are necessary.	Level 1
AM-22-2	Medium level	Protective measures are necessary.	Level 2
AM-22-3	High level	Normal equipment.	Level 3
AM-22-4	Very high level	High immunity equipment.	Level 4
	Conducted unidirectional transients of microsecond to millisecond time scale		
AM-23-1 AM-23-2 AM-23-3	Controlled level Medium level High level	Impulse withstand of equipment and overvoltage protective means chosen taking into account the nominal supply voltage and the impulse withstand category according to SS 555.	SS 555 SS 555
	Conducted oscillatory transients		
AM-24-1	Medium level	Refer to IEC 61000-4-12.	IEC 61000-4-12
AM-24-2	High level	Refer to IEC 60255-22-1.	IEC 60255-22-1
	Radiated high-frequency phenomena		IEC 61000-4-3
AM-25-1	Negligible level		Level 1
AM-25-2	Medium level	Normal[b]	Level 2
AM-25-3	High level	Reinforced level.	Level 3
	Electrostatic discharges		IEC 61000-4-2
AM-31-1	Small level	Normal[b]	Level 1
AM-31-2	Medium level	Normal[b]	Level 2
AM-31-3	High level	Normal[b]	Level 3
AM-31-4	Very high level	Reinforced.	Level 4
AM-41-1	Ionisation No classification	Special protection such as: – Spacings from source – Interposition of screens, enclosure by special materials.	
a	May necessitate certain supplementary precautions (e.g. special lubrication).		
b	This means that ordinary equipment will operate safely under the described external influences.		
c	This means that special arrangements should be made, for example, between the designer of the installation and the equipment manufacturer, e.g. for specially designed equipment.		

COPYRIGHT

A ENVIRONMENT (cont'd)

Code	External influences	Characteristics required for selection and erection of equipment	Reference for information only
AN	**Solar radiation**		
AN1	Low	Normal[b]	IEC 60721-3-3
AN2	Medium	Appropriate arrangements must be made[c]	IEC 60721-3-3
AN3	High	Appropriate arrangements must be made[c] Such arrangements could be: – material resistant to ultraviolet radiation – special colour coating – interposition of screens.	IEC 60721-3-4
AP	**Seismic effects**		
AP1	Negligible	Normal[b]	
AP2	Low severity	Under consideration.	
AP3	Medium severity		
AP4	High severity	Vibration which may cause the destruction of the building is outside the classification. Frequency is not taken into account in the classification; however, if the seismic wave resonates with the building, seismic effects must be specially considered. In general, the frequency of seismic acceleration is between 0 Hz and 10 Hz.	
AQ	**Lightning**		
AQ1	Negligible	Normal[b]	
AQ2	Indirect exposure	Installations supplied by overhead lines.	
AQ3	Direct exposure	If lightning protection is necessary, it should be arranged according to IEC 62305-1. Parts of installations located outside buildings. The risks AQ2 and AQ3 relate to regions with a particularly high level of thunderstorm activity.	
AR	**Movement of air**		
AR1	Low	Normal[b]	
AR2	Medium	Appropriate arrangements should be made[c]	
AR3	High	Appropriate arrangements should be made[c]	
AS	Wind		
AS1	Low	Normal[b]	
AS2	Medium	Appropriate arrangements should be made[c]	
AS3	High	Appropriate arrangements should be made[c]	
a	May necessitate certain supplementary precautions (e.g. special lubrication).		
b	This means that ordinary equipment will operate safely under the described external influences.		
c	This means that special arrangements should be made, for example, between the designer of the installation and the equipment manufacturer, e.g. for specially designed equipment.		

COPYRIGHT

B UTILISATION

Code	External influences	Characteristics required for selection and erection of equipment				Reference for information only
BA	**Capability of persons**					
BA1	Ordinary	Normal[b]				Inaccessibility of electrical equipment. Limitation of temperature of accessible surfaces.
BA2	Children	Equipment of degrees of protection higher than IP2X. Inaccessibility of equipment with external surface temperature exceeding 80 °C (60 °C for nurseries and the like).				
BA3	Handicapped	According to the nature of the handicap.				
BA4 BA5	Instructed Skilled	Equipment not protected against direct contact admitted solely in locations which are accessible only to duly authorised persons.				
BB	**Electrical resistance of the human body. Under consideration.**					
BC	**Contact of persons with Earth potential**					
		Class of equipment according to IEC 61140				
		0-01	I	II	III	
BC1	None	A	Y	A	A	
BC2	Low	A	A	A	A	
BC3	Frequent	X	A	A	A	413.3 of IEC 60364-4-41
BC4	Continuous	Under consideration A = equipment permitted X = equipment permitted Y = permitted if used as Class 0				
BD	**Conditions of evacuation in an emergency**					
BD1	Low density / easy exit	Normal[b]				
BD2	Low density / difficult exit	Equipment made of material retarding the spread of flame evolution of smoke and toxic gases. Detailed requirements are under consideration.				
BD3	High density / easy exit					
BD4	High density / difficult exit					
BE	**Nature of processed or stored materials**					
BE1	No significant risk	Normal[b]				
BE2	Fire risks	Equipment made of material retarding the spread of flame. Arrangements such that a significant temperature rise or a spark within electrical equipment cannot initiate an external fire.				IEC 60364-4-42 IEC 60364-5-51
BE3	Explosion risks	Barns, woodworking shops, paper factories. Requirements for electrical apparatus for explosive atmospheres (see IEC 60079).				
BE4	Contamination risks	Oil refineries, hydrocarbon stores. Appropriate arrangements, such as protection against falling debris from broken lamps and other fragile objects. Screens against harmful radiation such as infrared or ultraviolet. Foodstuff industries, kitchens certain precautions may be necessary, in the event of fault, to prevent processed materials being contaminated by electrical equipment, e.g. by broken lamps.				

a	May necessitate certain supplementary precautions (e.g. special lubrication).
b	This means that ordinary equipment will operate safely under the described external influences.
c	This means that special arrangements should be made, for example, between the designer of the installation and the equipment manufacturer, e.g. for specially designed equipment.

COPYRIGHT

C CONSTRUCTION

Code	External influences	Characteristics required for selection and erection of equipment	Reference for information only
CA	**Construction materials**		
CA1	Non-combustible	Normal[b]	
CA2	Combustible	Under construction Wooden buildings	IEC 60364-4-42
CB	**Building design**		
CB1	Negligible risks	Normal[b]	
CB2	Propagation of fire	Equipment made of material retarding the propagation of fire including fires not originating from the electrical installation. Fire barriers. **NOTE:** Fire detectors may be provided. High-rise buildings. Forced ventilation systems.	IEC 60364-4-42 IEC 60364-5-52
CB3	Movement	Contraction or expansion joints in electrical wiring. Buildings of considerable length or erected on unstable ground.	Contraction or expansion joints IEC 60364-5-52
CB4	Flexible or unstable	Under consideration. Tents, air-support structures, false ceilings, removable partitions. Installations to be structurally self-supporting.	Flexible wiring IEC 60364-5-52
a	May necessitate certain supplementary precautions (e.g. special lubrication).		
b	This means that ordinary equipment will operate safely under the described external influences.		
c	This means that special arrangements should be made, for example, between the designer of the installation and the equipment manufacturer, e.g. for specially designed equipment.		

COPYRIGHT

Appendix 6(L)
(informative)

Standard methods of testing

1. General

The methods described in this Appendix are suitable for the corresponding testing prescribed in Section 612. They are given as examples, and the use of other methods giving no less effective results is not precluded.

2. Continuity of ring final circuit conductors

Method 1

The continuity of each conductor of the ring circuit, including the protective conductor, is measured between the two ends of the conductor before completion of the ring. The resistance values are noted.

After connection of the two ends of each conductor to complete the ring, the resistance is measured between the corresponding distribution board terminal and the appropriate terminal or contact at the outlet nearest to the midpoint of the ring, using a suitable test lead. The resistance value is noted and the resistance value of the test lead is deducted from this. The resulting value should be approximately one quarter of the corresponding value obtained before completion of the ring.

Method 2

The continuity of each conductor of the ring circuit, including the protective conductor, is measured between the two ends of the conductor before completion of the ring. The resistance values are noted. After completion of the ring, the various conductors of the circuit are all bridged together at the point nearest to the midpoint of the ring The resistance is then measured between the phase and neutral terminals at the origin of the circuit in the distribution board, when the value obtained should be approximately one half of the value obtained for either the phase or the neutral conductor before completion of the ring.

Where the protective conductor is in the form of a ring, the resistance is then measured between the phase and earth terminals at the origin of the circuit The value obtained should be the sum of one quarter of the value originally obtained for the phase conductor and one quarter of the value originally obtained for the protective conductor.

3. Continuity of protective conductors and equipotential bonding

The initial tests to the applied to protective conductors are intended to verify that the conductors are electrically sound and correctly connected, before the installation is energised and before any other tests involving these conductors are made. The test is made with a voltage not exceeding 50 V a.c. or d.c. and at a current approaching 1.5 times the design current of the circuit under test, except that the current need not exceed 25 A.

For a.c., the current shall be at the frequency of the supply. If a d.c. Test is used, it is to be verified by inspection throughout the length of the protective conductor that no inductor is incorporated Where the protective conductor is not steel conduit or other steel enclosure the requirement concerning the test current does not apply and a d.c. ohmmeter may be used.

COPYRIGHT

It is often more convenient if a hand generator or other portable device is used rather than a transformer fed from the supply, as in this event the live conductors of the various circuits, whilst disconnected from the supply, may be connected for purpose of test to the consumer's earthing terminal and the test can then be made between the phase conductor and the protective conductor at each individual point, such as a socket-outlet.

4. Earth electrode resistance

An alternating current of a steady value is passed between the earth electrode T and an auxiliary earth electrode T_1 placed at such a distance from T that the resistance areas of the two electrodes do not overlap. A second auxiliary earth electrode T_2, which may be a metal spike driven into the ground, is then inserted half-way between T and T_1 and the voltage drop between T and T_2 is measured. The resistance of the earth electrodes is then the voltage between T and T_2, divided by the current flowing between T and T_1 provided that there is no overlap of the resistance areas. See Figure 6A.

To check that the resistance of the earth electrodes is a true value, two further readings are taken with the second auxiliary electrode T_2 moved 6 m further from and 6 m nearer to T respectively. If the three results are substantially in agreement, the mean of the three readings is taken as the resistance of the earth electrode T. If there is no such agreement the tests are repeated with the distance between T and T_1 increased.

The test is made either with current at power frequency, in which case the resistance of the voltmeter used must be high (of the order of 200 ohms per volt), or with alternating current from an earth tester comprising a hand-driven generator, a rectifier (where necessary), and a direct-reading ohmmeter.

If the tests are made at power frequency the source of the current used for the test is isolated from the mains supply (e.g. by a double-wound transformer), and in any event the earth electrode T under test is disconnected from all sources of supply other than that used for testing.

Figure 6A – Measurement of earth electrode resistance

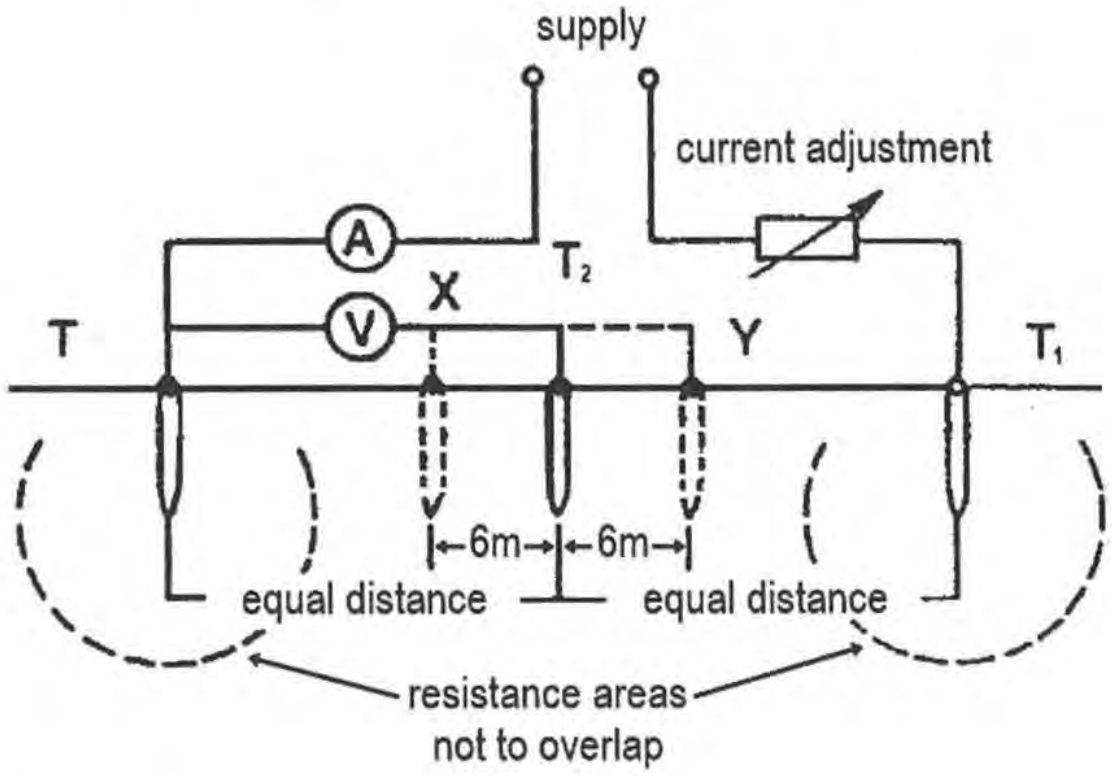

T - earth electrode under test disconnected from all other sources of supply
T_1 - auxiliary earth electrode
T_2 - second auxiliary earth electrode
X - alternative position of T2 for check measurement
Y - further alternative position of T2 for check measurement.

COPYRIGHT

5. Earth fault loop impedance

The earth fault current loop (phase to earth loop) comprises the following parts, starting at the point of fault:

- the circuit protective conductor, and
- the consumer's earthing terminal and earthing conductor, and
- for TN-S systems, the metallic return path, or
- for TT systems, the earth return path, and
- the path through the earthed neutral point of the transformer and the transformer winding, and
- the phase conductor from the transformer to the point of fault.

The impedance of the earth fault loop is denoted by Z_s.

These tests may be made using an instrument which measures the current flowing when a known resistance is connected between the phase conductor and consumer's earthing terminal. In using such an instrument care should be taken that no ill effects can arise if the earthing circuit is defective.

Where a measurement on an a.c. system is made with less than 10 amperes a.c., or with rapidly reversed d.c., and the protective conductor is wholly or mainly of steel conduit or pipe, the effective value is taken as twice the measured value, less the value measured at the consumer's earthing terminal (Z_e). The value Z_e is that part of the earth fault loop external to the installation. In all other cases the effective value is the measured value. Measurement in systems fed from small transformers may need compensation to include an allowance for the impedance of transformers, balancers and the like.

(i) The measurement of Z_e is made with the main equipotential bonding conductors temporarily disconnected, having verified that the method of test is such that no danger can occur.

(ii) The measurement of Z_s, i.e. at a point distant from the origin of the installation, is made with the main equipotential bonding conductors in place. Alternately, for an installation having cables of cross-sectional area not exceeding 35 mm^2, Z_s may be obtained by summating arithmetically the measured value of Z_e, the measured value of the resistance of the phase conductor from the origin of the installation or circuit to the most distant socket-outlet or other point of utilisation (R_1), and the measured value of the resistance of the circuit protective conductor from the origin of the installation or circuit to that socket-outlet or point of utilisation (R_2). The tests of the resistances of the circuit phase and protective conductors may be made using one of the methods described in Sections 2 and 3 of this Appendix. Any instrument used should be suitably calibrated and the test current should be 1.5 times the design current of the circuit under test except that the current need not exceed 25 A.

6. Operation of residual current device

Residual current operated circuit breakers to SS 97

The test is made on the load side of the circuit breaker, between the phase conductor of the circuit protected and the associated circuit protective conductor, so that a suitable residual current flows. All loads normally supplied through the circuit breaker are disconnected during the test.

The rated tripping current shall cause the circuit breaker to open within 0.1 s.

NOTE – Where the circuit breaker has a rated tripping current not exceeding 30 mA and has been installed to reduce the risk associated with direct contact as indicated in 415.1, a residual current of 150 mA should cause the circuit breaker to open within 40 ms.

In no event should the test current be applied for a period exceeding one second.

COPYRIGHT

The effectiveness of the test button or other test facility integral with the circuit breaker is also to be tested, preferably after application of the externally applied tests described above.

Figure 6B – Method of test for compliance with requirements in Section 415 for a residual current operated circuit breaker to SS 97

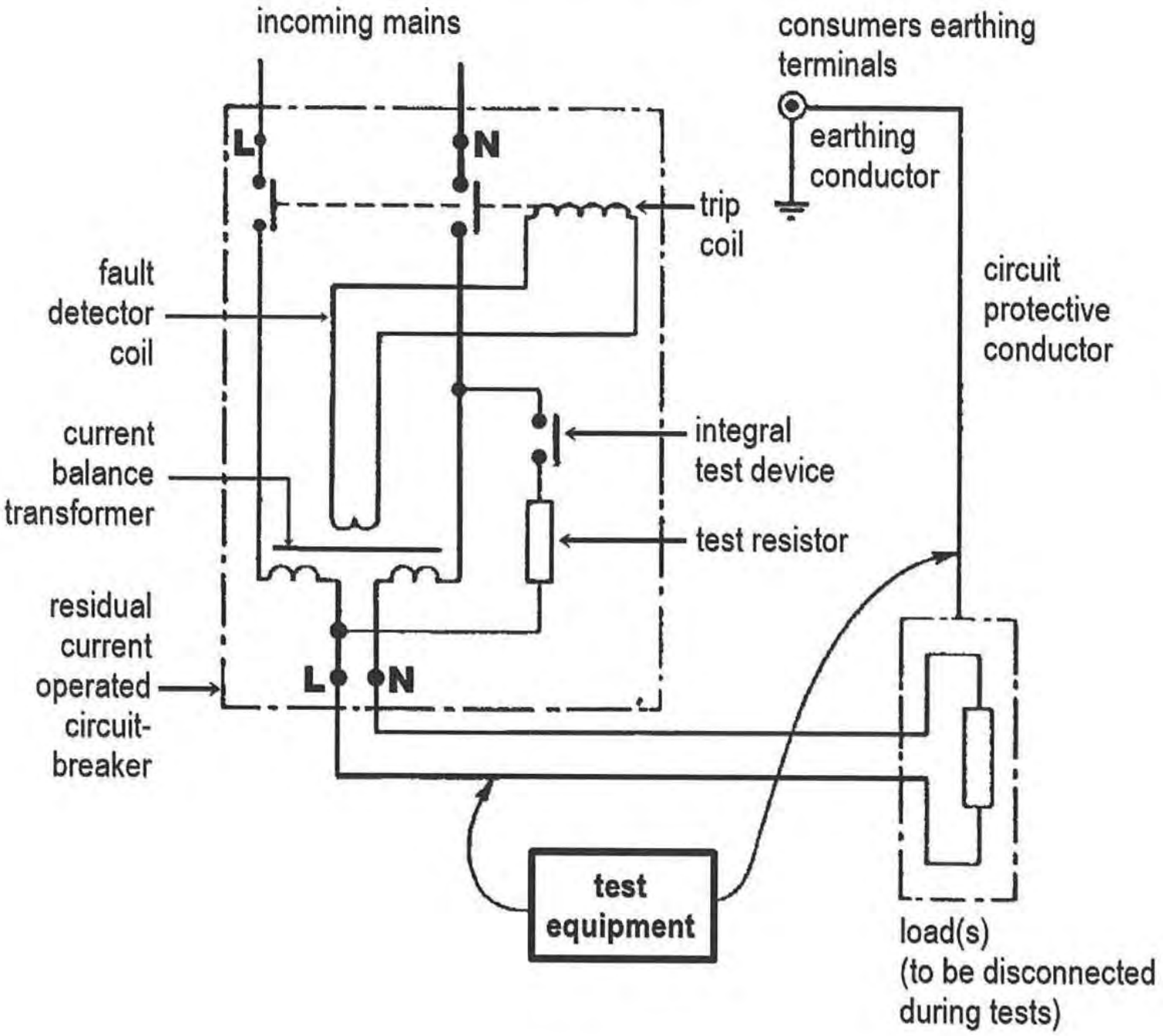

COPYRIGHT

Appendix 7(L)
(normative)

New cable core colours

(Appendix 7(L) should be read in conjunction with Annex B(L)
on revised cable colour code)

A7.1 Introduction

1. The requirements of the new cable core colours for fixed wiring in this Code have been revised to be aligned to the technical intent of BS 7671: 2008 + A3: 2015.

This Appendix provides guidance on the new colour code for identification of conductors and precaution to be taken in dealing with old and new wiring in existing installations. It allows marking connections by colours (tapes, sleeves or discs), or by alphanumerics (letters and/or numbers). Methods may be mixed within an installation.

It also provides guidance on marking at the interface between old and the revised colours, and general guidance on the colours to be used for conductors.

2. Addition or alteration to an existing installation

2.1 Single-phase

An addition or an alteration made to a single-phase installation shall be marked at the interface with the exception where:

(i) the old cables are correctly identified by the colour red or yellow for line and black for neutral, and

(ii) the new cables are correctly identified by the colour brown for line and blue for neutral.

2.2 Two- or three-phase installation

Where an addition or an alteration is made to a two- or a three-phase installation wired in the old core colours with cable to the new core colours, unambiguous identification is required at the interface. Cores shall be marked as follows:

Neutral conductors	
Old and new conductors:	N
Line conductors	
Old and new conductors:	L1, L2, L3

NOTE – Where the existing installation has circuits marked as L1, L2 and L3, additional identifications shall be provided to distinguish between the circuit and core colour markings.

COPYRIGHT

Table 7A – Conductor marking at the interface for additions and Alterations to an a.c. installation identified with the old cable colours

Function	Old conductor		New conductor	
	Colour	Marking	Marking	Colour
Line 1 of a.c.	Red	L1	L1	Brown(1)
Line 2 of a.c.	Yellow	L2	L2	Black(1)
Line 3 of a.c.	Blue	L3	L3	Grey(1)
Neutral of a.c.	Black	N	N	Blue
Protective conductor	Green-and-Yellow			Green-and-Yellow

(1) Three single-core cables with insulation of the same colour may be used if identified at the terminations.

3. Switch wires in a new installation or an addition or alteration to an existing installation

Where a two-core cable with cores coloured brown and blue is used as a switch wire, both conductors being line conductors, the blue conductors shall be marked brown or L at its terminations.

4. Intermediate and two-way switch wires in a new installation or an alteration or addition to an existing installation

Where a three-core cable with cores coloured brown, black and grey is used as a switch wire, all three conductors being line conductors, the black and grey conductors shall be marked brown or L at their terminations.

5. Line conductors in a new installation or an addition or alteration to an existing installation

Power circuit line conductors should be coloured as in Table 51. Other line conductors may be brown, black, red, orange, yellow, violet, grey, white, pink or turquoise.

In a two- or three-phase power circuit the line conductors may all be of one of the permitted colours, either identified L1, L2, L3 or marked brown, black, grey at their terminations to show the phases.

6. Changes to cable core colour identification

Table 7B – Reserved for future use

Table 7C – Standard 600/1000V armoured cable

Cable type	Old core colours	New core colours
Single-core	Red or Black	Brown or Blue
Two-core	Red, Black	Brown, Blue
Three-core	Red, Yellow, Blue	Brown, Black, Grey
Four-core	Red, Yellow, Blue, Black	Brown, Black, Grey, Blue
Five-core	Red, Yellow, Blue, Black, Green-and-Yellow	Brown, Black, Grey, Blue, Green-and-Yellow

NOTE – Where one of the colour conductors is used as circuit protective conductor, it shall be marked as green-and-yellow according to Table 51

COPYRIGHT

Table 7D – Flexible cable

Cable type	Old core colours	New core colours
Two-core	Brown, Blue	No change
Three-core	Brown, Blue, Green-and-Yellow	No change
Four-core	Black, Blue, Brown, Green-and-Yellow	Brown, Black, Grey, Green-and-Yellow
Five-core	Black, Blue, Brown, Black, Green-and-Yellow	Brown, Black, Grey, Blue, Green-and-Yellow

7. Alteration or addition to a d.c. installation

When an alteration or an addition is made to a d.c. installation wired in the old core colours with cable to the new core colours, unambiguous identification is required at the interface. Cores shall be marked as follows:

Neutral and mid-point conductors
Old and new conductors: M

Line conductors
Old and new conductors: Brown or Grey, or
L, L+ or L-

Table 7E – Conductor marking at the interface for additions and alterations to a d.c. installation identified with the old cable colours

Function	Old conductor		New conductor	
	Colour	Marking	Marking	Colour
Two-wire unearthed d.c. power circuit				
Positive of two-wire circuit	Red	L+	L+	Brown
Negative of two-wire circuit	Black	L-	L-	Grey
Two-wire earthed d.c. power circuit				
Positive (of negative earthed) circuit	Red	L+	L+	Brown
Negative (of negative earthed) circuit	Black	M	M	Blue
Positive (of positive earthed) circuit	Black	M	M	Blue
Negative (of positive earthed) circuit	Blue	L-	L-	Grey
Three-wire d.c. power circuit				
Outer positive of two-wire circuit derived from three-wire system	Red	L+	L+	Brown
Outer negative of two-wire circuit derived from three-wire system	Red	L-	L-	Grey
Positive of three-wire circuit	Red	L+	L+	Brown
Mid-wire of three-wire circuit	Black	M	M	Blue
Negative of three-wire circuit	Blue	L-	L-	Grey

COPYRIGHT

A7.2L Revised cable colour code

Refer to Annex B(L).

COPYRIGHT

Appendix 8(L)
(informative)

Current-carrying capacity and voltage drop for busbar trunking systems

1L. Basis of current-carrying capacity

The current-carrying capacity (I_n) of a busbar trunking system relates to continuous loading and is declared by the manufacturer based on tests to IEC 61439-6 (busbar trunking). The current-carrying capacity is designed to provide for satisfactory life of the system, subject to the thermal effects of carrying current for sustained periods in normal service.

Considerations affecting the choice of size of a busbar trunking system include the requirements for protection against electric shock (see Chapter 41), protection against thermal effects (see Chapter 42), protection against fire (see Section 421) overcurrent protection (see Chapter 43 and Section 4 below), Common Rules (see Chapter 51) and voltage drop (see Section 5 below).

2L. Rating factors for current-carrying capacity for busbar trunking systems

The current-carrying capacity of a busbar trunking system (I_n) can be affected by the ambient temperature and the mounting conditions (for example the orientation of the conductors).

Installation ambient temperature

If the ambient temperature exceeds 35 °C the rating factor k_α to be applied is obtained from the manufacturer of the busbar trunking system (k_α = 1 for 35 °C).

The effective current-carrying capacity (I_z) at the new temperature is $k_\alpha \times I_n$.

Mounting attitude

The mounting factor k_β to be applied is obtained from the manufacturer of the busbar trunking system.

The effective current-carrying capacity (I_z) under the new mounting conditions is $k_\beta \times I_n$.

In a typical installation, both factors may have to be taken into account and the effective current-carrying capacity (I_z) then becomes $k_\alpha \times k_\beta \times I_n$.

NOTE – Factors k_α and k_β are the same as k_1 and k_2 respectively taken from IEC 61439-2. The symbols k_α and k_β have been used to avoid confusion with the symbols k_1 and k_2 in Table 54.7.

3. Effective current-carrying capacity

I_z must be not less than I_b, such that: $I_z \geq I_b$

where:

I_z is the effective current-carrying capacity of the busbar trunking system for continuous service under the particular installation conditions and
I_b is the design current of the circuit.

COPYRIGHT

4. Protection against overload current

The minimum operating current of the protective device should not exceed 1.45 I_z. Where the protective device is a fuse to IEC 60269 series or a circuit-breaker to either IEC 60947-2 or IEC 60898-1, this requirement is satisfied by selecting a value of I_z not less than I_n, where I_n is the rated current or current setting of the device protecting the circuit against overcurrent.

5. Voltage drop

The voltage drop (V_d) for the busbar trunking system is obtained from the manufacturer. It is usually expressed as mV/ampere/metre based on the line voltage of a 3-phase system, tabulated according to the value of the load-circuit power factor. The voltage drop given is calculated on the basis of a single load at the end of the run and, in this case, the total voltage drop = $V_d \times I_b \times L / 1000$ volts, where L is the length of run in metres.

In the case of an evenly distributed load (tapped off at intervals along the busbar system) then the voltage drop at the farthest tap-off point may be based on 0.5 V_d, and is calculated by the above method.

In the case of an unevenly distributed load it will be necessary to calculate the voltage drop for each section between tap-off points and add them together to find the voltage drop at the furthest tap-off point.

6L. Inspection and testing

Every busbar trunking system shall, before put into service be inspected and tested (see Chapter 62). In addition, the alignments of the joints and required tightening torque shall be checked to verify that the recommendations of the manufacturer have been met.

COPYRIGHT

Appendix 9(L)

Reserved for future use

COPYRIGHT

Appendix 10(L)
(informative)

Protection of conductors in parallel against overcurrent

1. Introduction

Overcurrent protection provided for conductors connected in parallel should provide adequate protection for all of the parallel conductors. For two conductors of the same cross-sectional area, conductor material, length and disposition arranged to carry substantially equal currents the requirements for overcurrent protection are straightforward. For more complex conductor arrangements, detailed consideration should be given to unequal current sharing between conductors and multiple fault current paths. This Appendix gives guidance on the necessary considerations.

NOTE – A more detailed method for calculating the current between parallel conductors is given in relevant part of the IEC 60287 series.

2. Overload protection of conductors in parallel

When an overload occurs in a circuit containing parallel conductors of multicore cables, the current in each conductor will increase by the same proportion. Provided that the current is shared equally between the parallel conductors, a single protective device can be used to protect all the conductors. The current-carrying capacity (I_z) of the parallel conductors is the sum of the current-carrying capacity of each conductor, with the appropriate grouping and other factors applied.

The current sharing between parallel cables is a function of the impedance of the cables. For large single-core cables the reactive component of the impedance is greater than the resistive component and will have a significant effect on the current sharing. The reactive component is influenced by the relative physical position of each cable. If, for example, a circuit consists of two large cables per phase, having the same length, construction and cross-sectional area and arranged in parallel with unfavourable relative position (i.e. cables of the same phase bunched together) the current sharing may be more like 70/30 rather than 50/50.

Where the difference in impedance between parallel conductors causes unequal current sharing, for example greater than 10% difference, the design current and requirements for overload protection for each conductor should be considered individually.

The design current for each conductor can be calculated from the total load and the impedance of each conductor.

For a total of m conductors in parallel, the design current Ibk for conductor k is given by:

$$I_{bk} = \frac{I_b}{\left(\frac{Z_k}{Z_1} + \frac{Z_k}{Z_2} + ... + \frac{Z_k}{Z_k - 1} + \frac{Z_k}{Z_k} + \frac{Z_k}{Z_{k+1}} + ... + \frac{Z_k}{Z_m} \right)}$$

where:

- I_b is the current for which the circuit is designed
- I_{bk} is the design current for conductor k
- Z_k is the impedance of conductor k

Z_1, Z_2 and Z_m are the impedances of conductors 1, 2 and m respectively.

COPYRIGHT

For parallel conductors up to and including 120 mm² cross-sectional area (csa) the design current I_{bk} for conductor k is given by:

$$1_{bk} = 1_b \frac{S_k}{S_1 + S_2 + ... + S_m}$$

where

$S_1, \ldots S_m$ is the csa of the conductors and

S_k is the csa of conductor k.

In the case of single-core cables, the impedance is a function of the relative positions of the cables as well as the design of the cable, for example, armoured or unarmoured. Methods for calculating the impedance are given in relevant part of the IEC 60287 series. It is recommended that current sharing between parallel cables is verified by measurement.

The design current I_{bk} replaces I_b in 433.1.1 as follows:

$$I_{bk} \leq I_n \leq I_{zk}$$

The value used for I_z in 433.1.1 is either:

(i) the continuous current-carrying capacity of each conductor, I_{zk}, if an overload protective device is provided for each conductor (see Figure 10A), hence:

$$I_{bk} \leq I_{nk} \leq I_{zk}$$

or

(ii) the sum of the current-carrying capacities of all the conductors, ΣI_{zk}, if a single overload protective device is provided for the conductors in parallel (see Figure 10B), hence:

$$I_b \leq I_n \leq \Sigma I_{zk}$$

where

I_{nk} is the rated current of the protective device for conductor k

I_{zk} is the continuous current-carrying capacity of conductor k

I_n is the rated current of the protective device

ΣI_{zk} is the sum of the continuous current-carrying capacities of the m conductors in parallel.

NOTE – For busbar systems, information should be obtained either from the manufacturer or from IEC 61439-6.

COPYRIGHT

Figure 10A – Circuit in which an overload protective device is provided for each of the m conductors in parallel

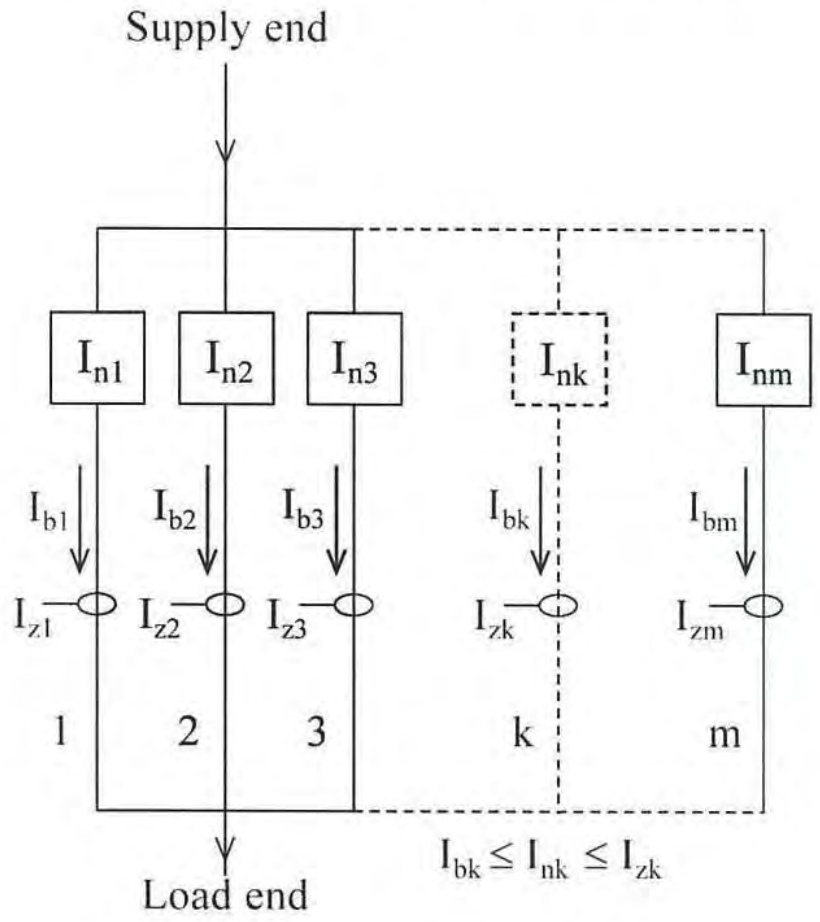

Figure 10B – Circuit in which a single overload protective device is provided for the m conductors in parallel

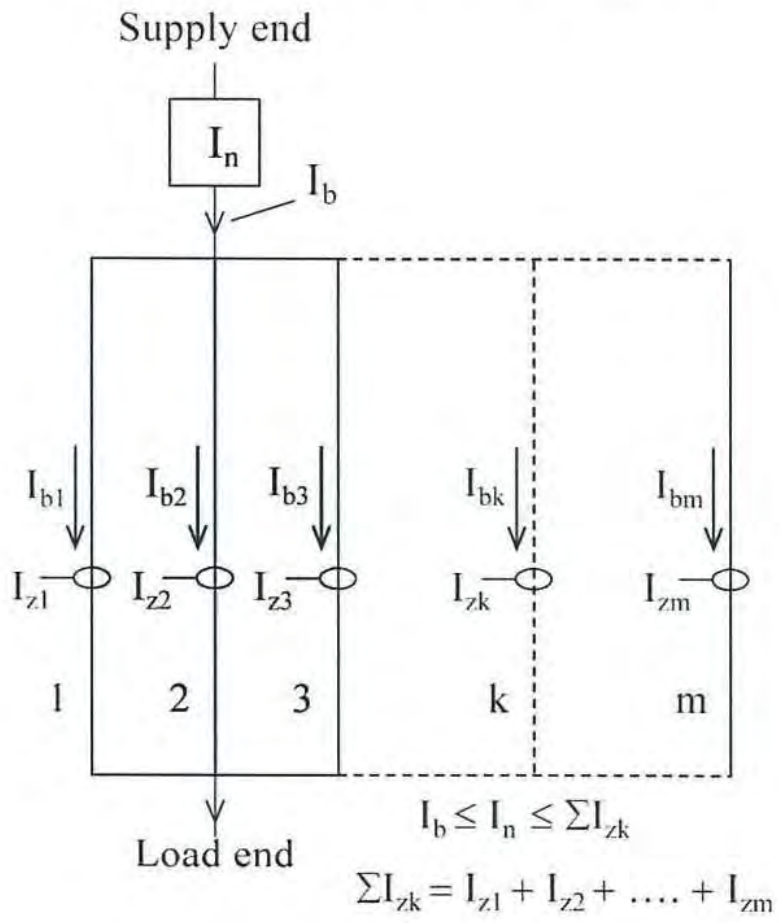

COPYRIGHT

3. Short-circuit protection of conductors in parallel

Where conductors are connected in parallel, the possibility of a short-circuit within the parallel section should be considered.

If two conductors are connected in parallel and the operation of a single protective device may not be effective, then each conductor should have individual protection.

Where three or more conductors are connected in parallel then multiple fault current paths can occur and it may be necessary to provide short-circuit protection at both the supply and load ends of each parallel conductor. This situation is illustrated in Figures 10C and 10D.

Figure 10C – Current flow at the beginning of the fault

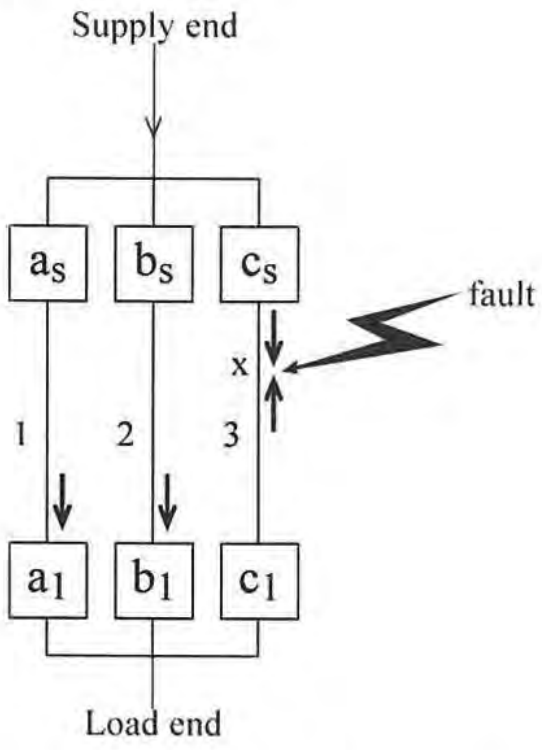

Figure 10D – Current flow after operation of the protective device c_s

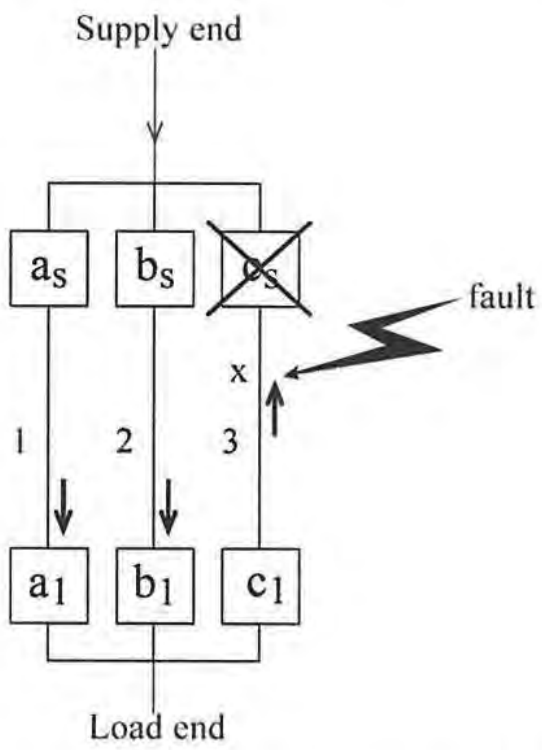

Figure 10C shows that, if a fault occurs in parallel conductor c at point x, the fault current will flow in conductors 1, 2 and 3. The magnitude of the fault current and the proportion of the fault current which flows through protective devices c_s and c_l will depend on the location of the fault. In this example it has been assumed that the highest proportion of the fault current will flow through protective device c_s.

Figure 10D shows that, once c_s has operated, current will still flow to the fault at x via conductors 1 and 2. Because conductors 1 and 2 are in parallel, the current through protective devices a_s and b_s may not be sufficient for them to operate in the required time. If this is the case, the protective device c_l is necessary. It should be noted that the current flowing through c_l will be less than the current which caused c_s to operate. If the fault was close enough to c_l then c_l would operate first. The same situation would exist if a fault occurred in conductors 1 or 2, hence the protective devices a_l and b_l will be required.

The method of providing protective devices at both ends has two disadvantages. Firstly, if a fault at x is cleared by the operation of c_s and c_l then the circuit will continue to operate with the load being carried by conductors 1 and 2. Hence the fault and subsequent overloading of 1 and 2 may not be detected. Secondly, the fault at x may burn open- circuit at the c_l side leaving one side of the fault live and undetected.

An alternative method to providing protective devices at both ends would be to provide linked protective devices at the supply end (Figure 10E). This would prevent the continued operation of the circuit under fault conditions.

COPYRIGHT

Figure 10E – Linked protective devices installed at the supply end of the parallel conductors

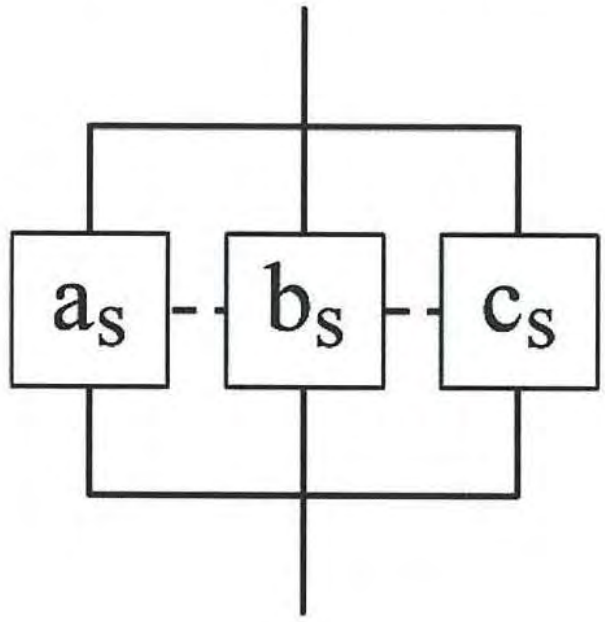

COPYRIGHT

Appendix 11(L)
(informative)

Effect of harmonic currents on balanced three-phase systems

See Appendix 4(L), Sections 6.5 and 6.6.

COPYRIGHT

Appendix 12(L)
(normative)

Voltage drop in consumers' installations

See Sections 525.

COPYRIGHT

Appendix 13
(informative)

Methods for measuring the insulation resistance/impedance of floors and walls to earth or to the protective conductor system

1. General

Measurement of impedance or resistance of insulating floors and walls should be carried out with the system voltage to Earth and nominal frequency, or with a lower voltage of the same nominal frequency combined with a measurement of insulation resistance. This may be done, for example, in accordance with the following methods of measurement:

(i) a.c. system

- by measurement with the nominal a.c. voltage, or
- by measurement with lower a.c. voltages (minimum 25 V) and, additionally, by an insulation resistance test using a minimum test voltage of 500 V d.c. for nominal system voltages not exceeding 500 V and a minimum test voltage of 1000 V d.c. for nominal system voltages above 500 V.

The following optional voltage sources may be used:

a) The earthed system voltage (voltage to Earth) that exists at the measuring point

b) The secondary voltage of a double-wound transformer

c) An independent voltage source at the nominal frequency of the system.

In options b) and c), the measuring voltage source is to be earthed for the measurement.

For safety reasons, when measuring voltages above 50 V, the maximum output current should be limited to 3.5 mA.

(ii) d.c. system

- nsulation resistance test by using a minimum test voltage of 500 V d.c. for nominal system voltages not exceeding 500 V
- insulation resistance test by using a minimum test voltage of 1000 V d.c. for nominal system voltages above 500 V.

The insulation resistance test should be made using measuring equipment in accordance with IEC 61557-2.

2. Test method for measuring the impedance of floors and walls with a.c. voltage

Current, I, is fed through an ammeter to the test electrode from the output of the voltage source or from the line conductor L (see Figure 13B for reference). The voltage (U_x) at the electrode to Earth or to the protective conductor is measured by means of a voltmeter with an internal resistance of at least 1 MΩ.

COPYRIGHT

The impedance of the floor insulation will then be: $Z_x = U_x/I$

The measurement for ascertaining the impedance is to be carried out at as many points as deemed necessary, selected at random, with a minimum of three. The test electrodes may be either of the following types. In case of dispute, the use of test electrode 1 is the reference method.

3. Test electrode 1

The electrode comprises a metallic tripod of which the parts resting on the floor form the points of an equilateral triangle. Each supporting point is provided with a flexible base ensuring, when loaded, close contact with the surface being tested over an area of approximately 900 mm^2 and presenting a resistance of less than 5000 Ω.

Before measurements are made, the surface being tested is cleaned with a cleaning fluid. While measurements are being made, a force of approximately 750 N for floors or 250 N for walls is applied to the tripod.

Figure 13A – Test electrode 1

4. Test electrode 2

The electrode comprises a square metallic plate with sides that measure 250 mm, and a square of damped, water- absorbent paper, or cloth, from which surplus water has been removed, with sides that measure approximately 270 mm. The paper is placed between the metal plate and the surface being tested.

COPYRIGHT

During measurement a force of approximately 750 N for floors or 250 N for walls is applied on the plate.

Fig 13B – Test electrode 2

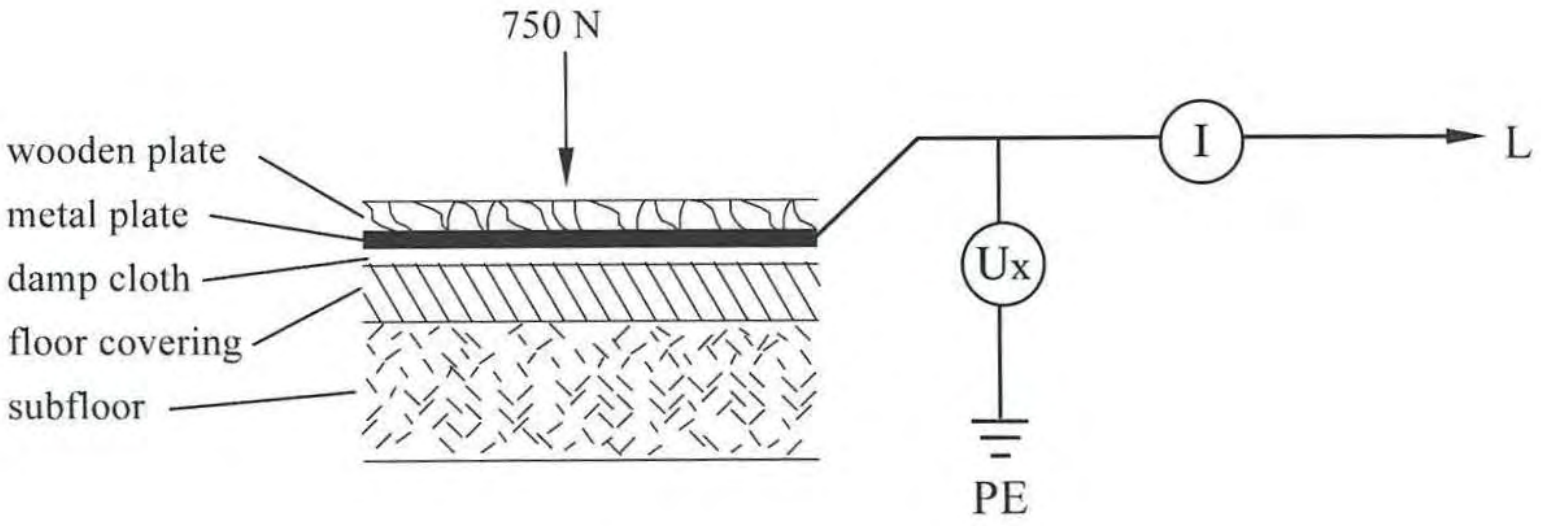

COPYRIGHT

Appendix 14(L)
(informative)

Measurement of earth fault loop impedance: Consideration of the increase of the resistance of conductors with increase of temperature

When impedance measurements are made at ambient temperature the procedure hereinafter described may be followed to take into account the increase of resistance of the conductors with the increase of temperature due to load current, to verify, for TN and TT systems in which protection by automatic disconnection is provided by overcurrent devices, compliance of the measured values of earth fault loop impedance with the appropriate requirements of 411.4L or 411.5.

The requirements of 411.4.5L or 411.5.4, as appropriate, are considered to be met when the measured value of earth fault loop impedance satisfies the following equation:

$Z_{s(m)} \leq 0.86 \times U_0/I_a$

where:

$Z_{s(m)}$ is the measured impedance of the earth fault current loop up to the most distant point of the relevant circuit from the origin of the installation (Ω)

U_0 is the nominal a.c. rms line voltage to earth (V)

I_a is the current in amperes (A) causing operation of the protective device within the time stated in Table 41.1 or within 5 s according to the conditions stated in 411.3.2.3L.

NOTE – The above factor of 0.86 is based on a local ambient temperature of 30 ^{0}C.

Where the measured value of the earth fault loop impedance exceeds the value obtained using the equation above, a more precise assessment of compliance with 411.4.5L or 411.5.4, as appropriate, may be made, evaluating the value of the earth fault loop impedance according to the following procedure:

(i) The line conductor to protective conductor loop impedance of the supply is first measured at the origin of the installation

(ii) The resistances of the line conductor and protective conductor of the distribution circuit(s) are then measured

(iii) The resistances of the line conductor and protective conductor of the final circuit are then measured

(iv) The values of resistance measured in accordance with (ii) and (iii) are increased on the basis of the increase of conductor temperature, taking into consideration the design current, (Ib)

(v) The values of resistance increased in accordance with (iv) are finally added to the value measured at (i) to obtain a realistic value of Z_s under earth fault conditions.

NOTE – Other methods are not precluded.

COPYRIGHT

Appendix 15(L)
(informative)

Ring and radial final circuit arrangements (see 433.1)

This Appendix sets out options for the design of ring and radial final circuits for household and similar premises in accordance with 433.1, using socket-outlets and fused connection units. It does not cover other aspects of the design of a circuit such as:

– Protection against electric shock, Chapter 41

– Protection against thermal effects, Chapter 42

– Protection against overcurrent, Chapter 43

– Selection and erection of equipment, Part 5.

The load current in any part of the circuit should be unlikely to exceed for long periods the current-carrying capacity of the cable (see 433.1.204L). This can generally be achieved by:

(i) locating socket-outlets to provide reasonable sharing of the load around the ring

(ii) not supplying immersion heaters, comprehensive electric space heating or loads of a similar profile from the ring circuit

(iii) connecting cookers, ovens and hobs with a rated power exceeding 2 kW on their own dedicated radial circuit

(iv) taking account of the total floor area being served. (Historically, a limit of 100 m^2 has been adopted).

COPYRIGHT

Figure 15A – Ring final circuit arrangements (see 433.1.204L)

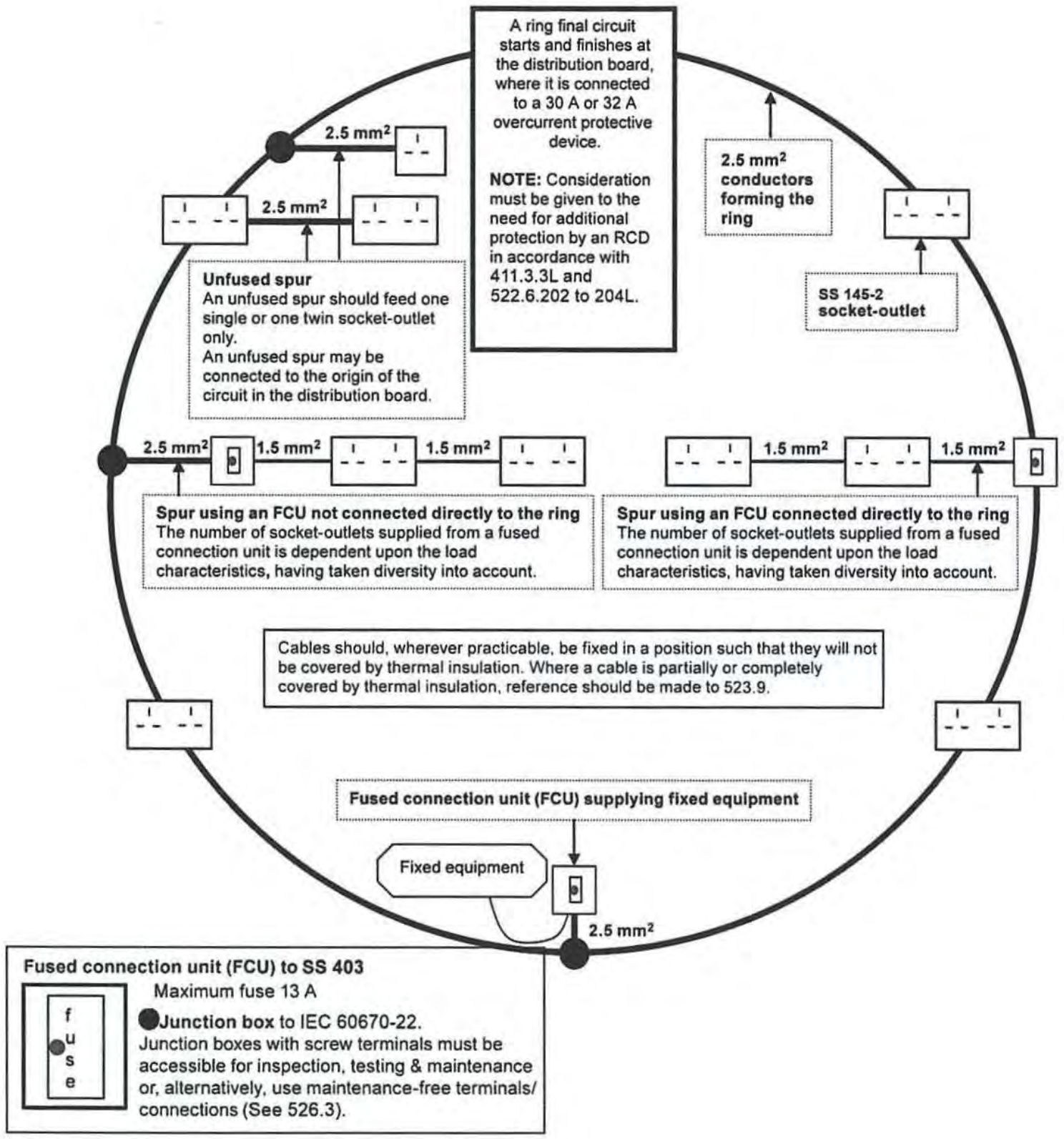

COPYRIGHT

Figure 15B – Radial final circuit arrangements (see 433.1)

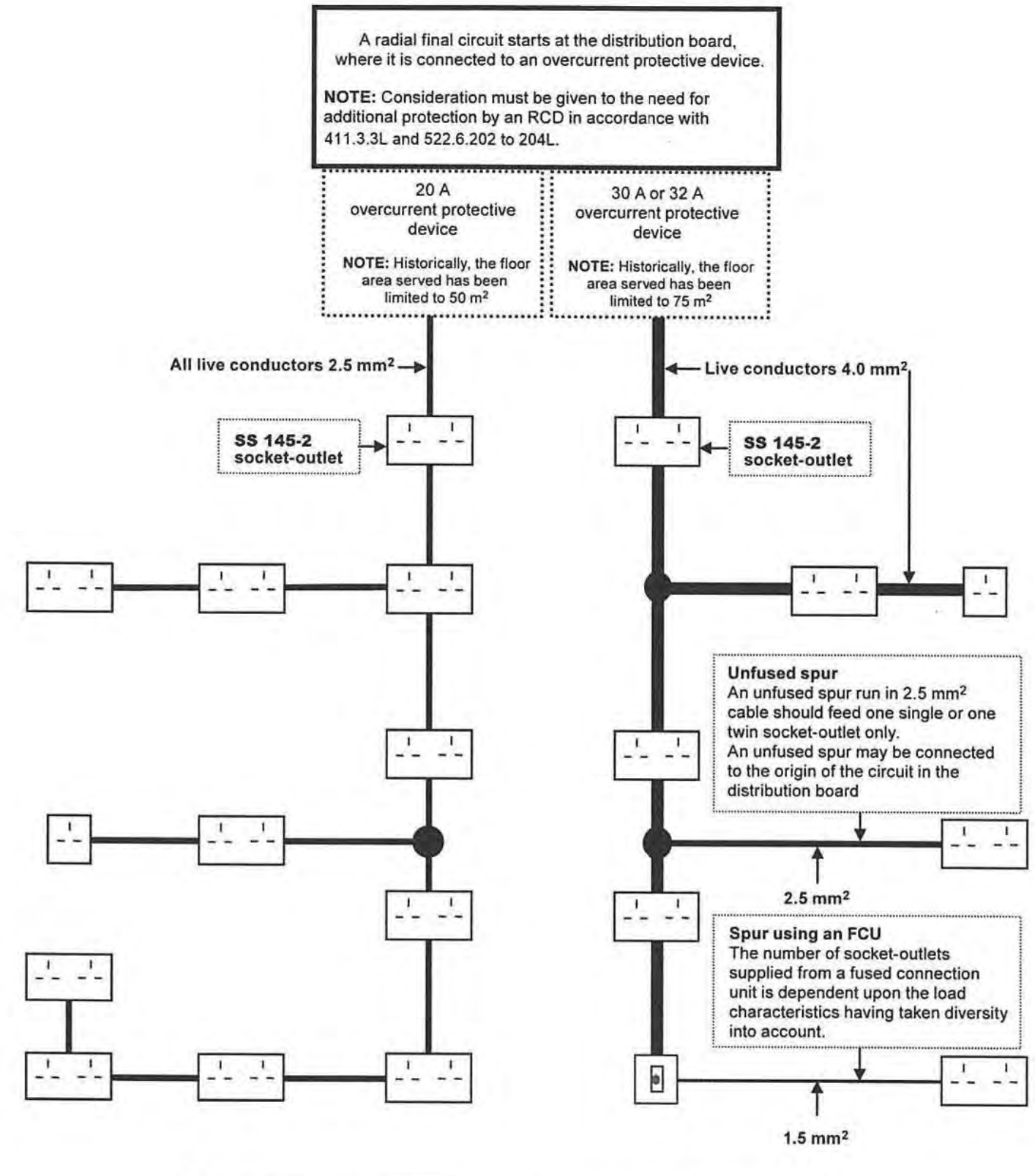

Cables should, wherever practicable, be fixed in a position such that they will not be covered by thermal insulation. Where a cable is partially or completely covered by thermal insulation, reference should be made to 523.9.

Fused connection unit (FCU) to SS 403

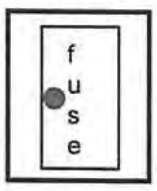

Maximum fuse 13 A

● **Junction box** to IEC 60670-22
Junction boxes with screw terminals must be accessible for inspection, testing & maintenance or, alternatively, use maintenance-free terminals/ connections (See 526.3).

COPYRIGHT

Appendix 16
(informative)

Devices for protection against overvoltage

Typical installation of a surge protective device (SPD) in a power distribution board for a TN-S system.

Figure 16A1 – SPD connected to the first overcurrent protective device (OCPD) to the incoming supply

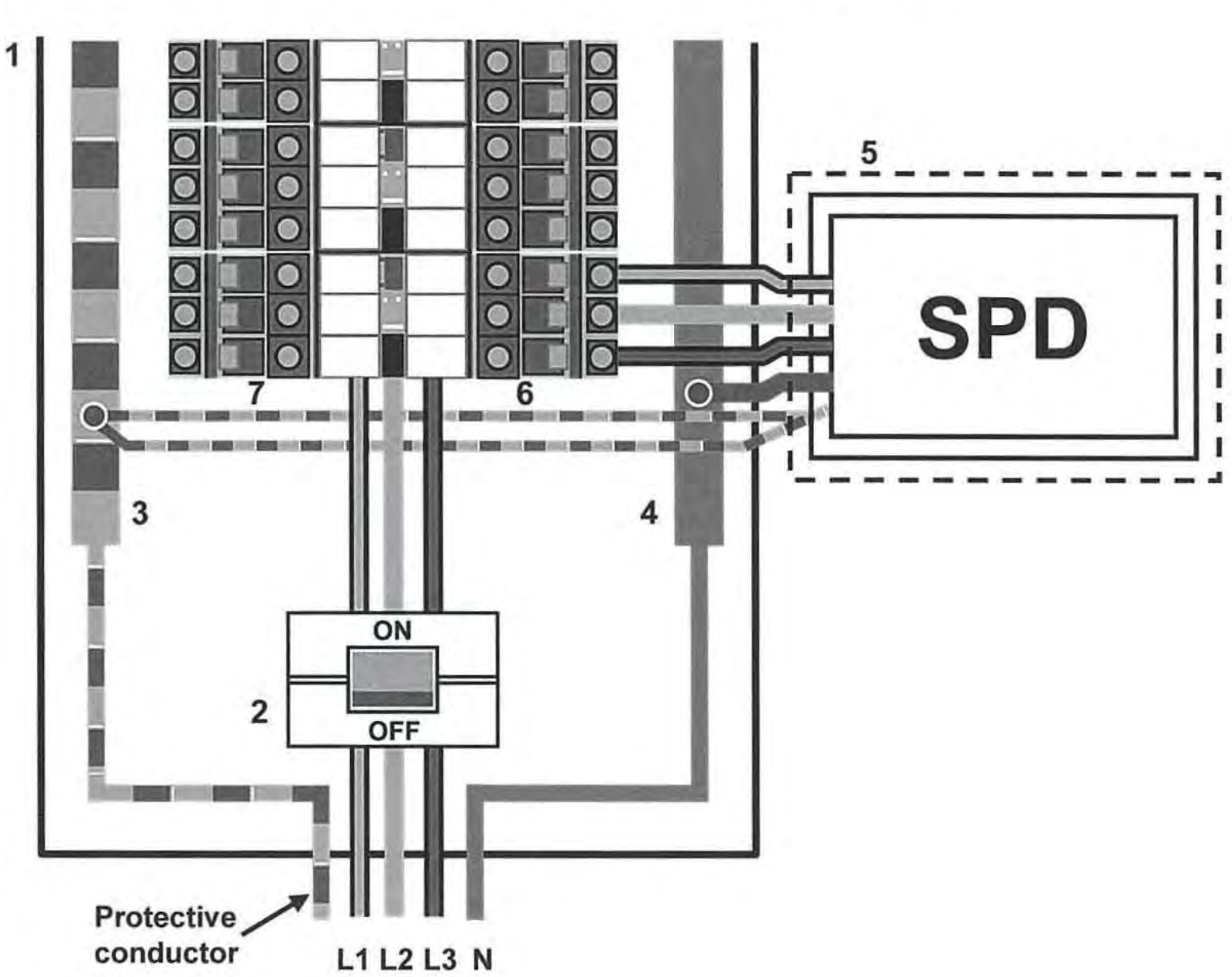

Key:
1. Distribution board
2. Main switch
3. Earthing bar
4. Neutral bar
5. Enclosure for SPD
6. First OCPD
7. Alternative first OCPD

NOTE – The OCPD provides a convenient means to protect the SPD and a means of isolation. As there is insufficient room within the distribution board the SPD is mounted in a separate enclosure for electrical safety. This enclosure is mounted directly alongside the distribution board to ensure the connecting leads are kept short. An additional local bonding connection is made to further minimise voltage drop on the connecting leads.

COPYRIGHT

Installation of surge protective devices in TT systems, Connection Type 1 (CT 1)

Figure 16A2 – SPDs on the load side of an RCD [according to 534.2.5(i)]

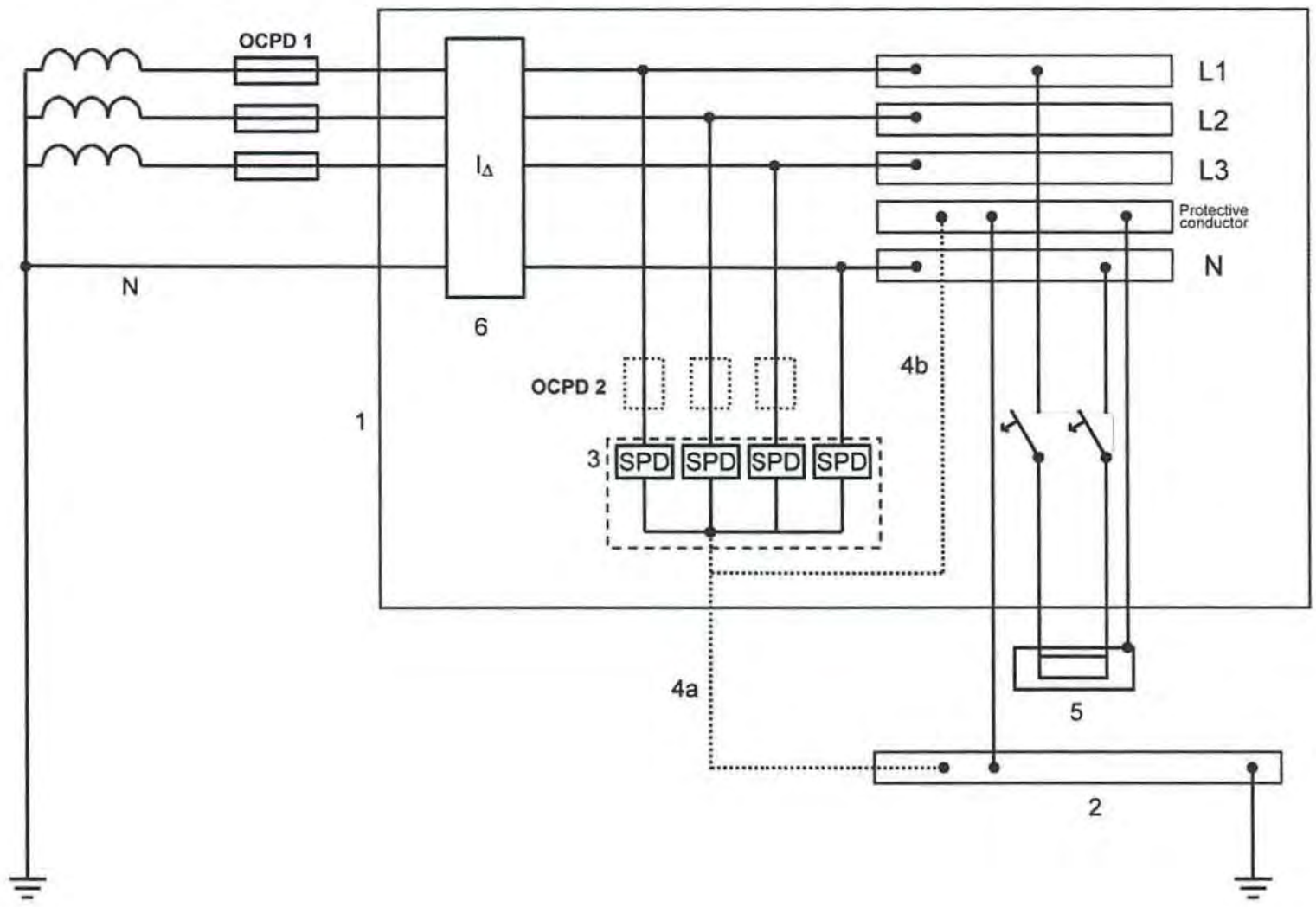

key

1 Distribution board

2 Main earthing terminal or bar

3 Surge protective device ensuring a protection level in accordance with overvoltage Category II

4 Earthing connection of surge protective devices, either 4a or 4b, whichever is the shorter route

5 Current-using equipment

6 Residual current protective device (RCD)

OCPD 1 Overcurrent protective device at the origin of the installation

OCPD 2 Overcurrent protective device

COPYRIGHT

Installation of surge protective devices in TT systems, Connection Type 2 (CT 2)

Figure 16A3 – SPDs on the supply side of an RCD [according to 534.2.5(ii)]

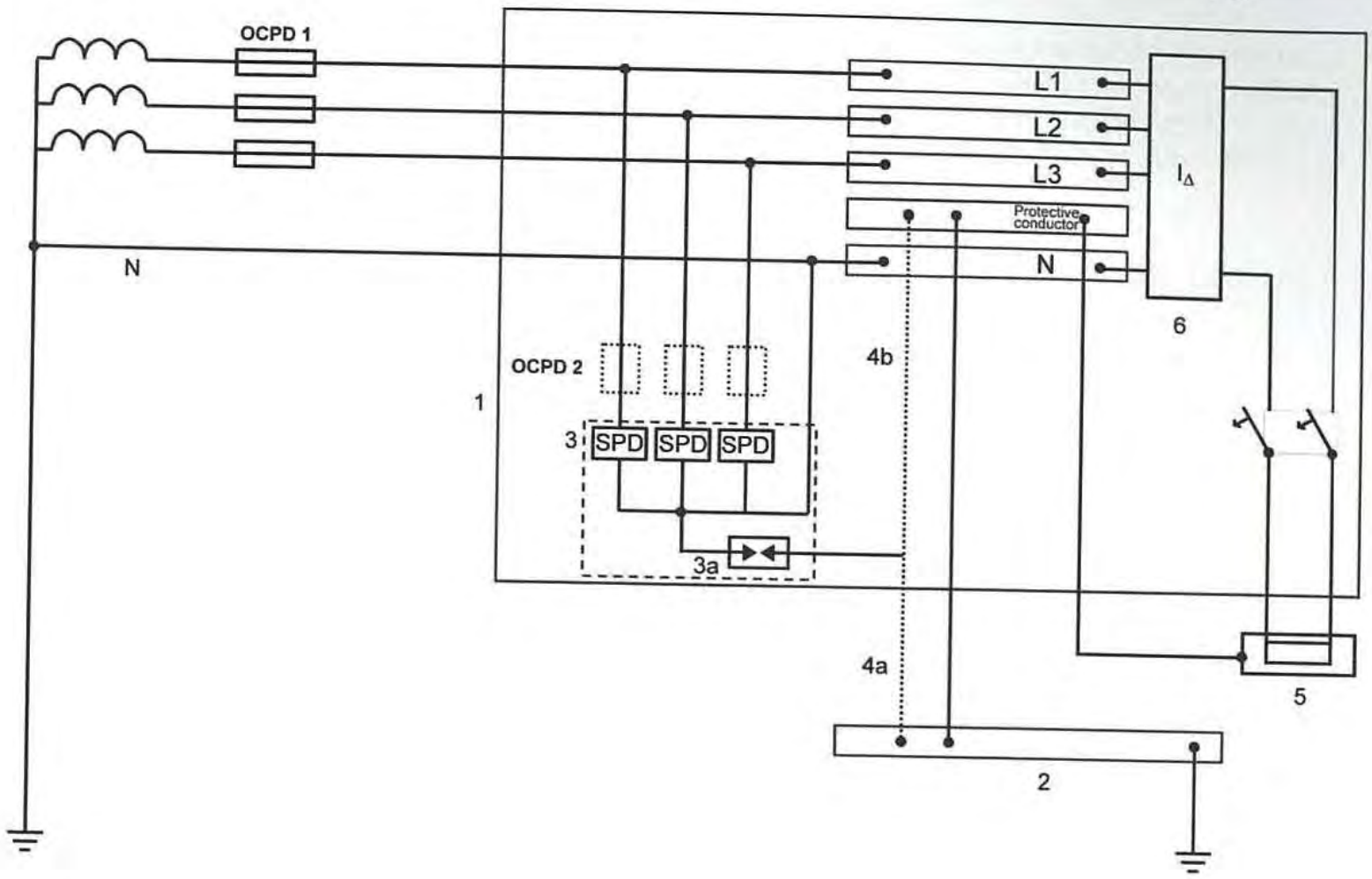

key

1 Distribution board

2 Main earthing terminal or bar

3 Surge protective devices

3a Surge protective device
(SPDs 3 and 3a in series ensuring a protection level in accordance with overvoltage Category II)

4 Earthing connection of surge protective devices, either 4a or 4b, whichever is the shorter route

5 Current-using equipment

6 Residual current protective device (RCD) installed downstream of the surge protective devices

OCPD 1 Overcurrent protective device at the origin of the installation

OCPD 2 Overcurrent protective device

COPYRIGHT

Typically, Type 1 SPDs are used at the origin of the installation, Type 2 SPDs are used at distribution boards and Type 3 SPDs are used near terminal equipment. Combined Type SPDs are classified with more than one Type, e.g. Type 1+2, Type 2+3. Type 1 SPDs are only used where there is a risk of direct lightning current.

The most important aspect in selecting an SPD is its limiting voltage performance (protection level U_p) during the expected surge event, and not the energy withstand (e.g. I_{imp}) which it can handle. An SPD with a low protection level will ensure adequate protection of the equipment, while an SPD with a high energy withstand may only result in a longer operating life.

Table 16A – Information on SPD classification

SPD According to IEC 62305-4	SPD According to IEC 61643-11
SPD tested with I_{imp}	Type 1
SPD tested with I_n	Type 2
SPD tested with a combination wave	Type 3

SPD tested with I_{imp} (IEC 62305-4)

SPDs which withstand the partial lightning current (with a typical waveform 10/350 μs) require a corresponding impulse test current I_{imp}.

NOTE 1 – For power lines, a suitable test current Iimp is defined in the Class I test procedure of IEC 61643-11.

SPD tested with I_n (IEC 62305-4)

SPDs which withstand induced surge currents with a typical waveform 8/20 μs require a corresponding impulse test current I_{nspd}.

NOTE 2 – For power lines, a suitable test current I_{nspd} is defined in the Class II test procedure of IEC 61643-11.

SPD tested with a combination wave (IEC 62305-4)

SPDs that withstand induced surge currents with a typical waveform 8/20 μs and require a corresponding impulse test current I_{sc}.

NOTE 3 – For power lines a suitable combination wave test is defined in the Class III test procedure of IEC 61643-11 defining the open-circuit voltage U_{oc} 1.2/50 μs and the short-circuit current I_{sc} 8/20 μs of a 2 Ω combination wave generator.

COPYRIGHT

INDEX

A

Abrasion, damage to wiring systems due to	522.6.1
Abbreviations used in the Standard	Part 2 Abbreviations
AC, types of cable not suitable for	521.5.2
Accessibility	
- Connections and joints	526.3L
- Emergency switching	537.4.2.2
- Equipment	132.12, 712.513.1, 513.1
- Protective conductor connections	543.3.2L, 543.3.201L
Accessible conductive parts, fundamental rule	Section 410L
Accessories	
- Concealed cables to	522.6.202L to 204L
- Selection and erection of	Sections 533 & 534
Accessory, definition	Part 2
Additional protection	
- As addition to basic and/or fault protection	415.1.1
- Bathrooms RCDs for all circuits	701.411.3.3
- Bathrooms supplementary equipotential bonding, and omission of	701.415.2
- Characteristics of RCDs for	415.1.1L
- Exception for certain socket-outlets	411.3.3L
- RCD, protection by	
o Bathrooms, all circuits	701.411.3.3
o Operating characteristics	415.1.2
o Saunas	703.411.3.3
o Socket-outlets, mobile equipment outdoors	411.3.3L
o Swimming pools	702.410.3.4(iii)
o Supplementary equipotential bonding	415.2
o Use of RCDs	411.3.3L
o Temporary installations at trade-fairs, etc	740L
o Where specified as part of protective measure	701.411.3.3
Additional protection (mechanical)	
- Equipment in general	612.10
- Protective measures	410.3.2
Additions to installations	132.16, 610.4
Adverse conditions, precautions in	512.2, Section 522, Part 7
Aerial cables	520.5L
Agricultural premises	
- Accessibility by livestock	705.513.2
- Automatic disconnection	705.411
- Buried cables	705.522
- Cattle sheds	705.512.2
- Dairies	705.512.2
- Dwellings	705.1
- Emergency switching, sitting of devices for	705.537.2
- Equipment protection	705.512.2
- Heating appliance, fixing of	705.422.6
- Isolation, devices for	705.537.2
- Life support of livestock, systems for	705.560.6
- Metallic grids in floors, bonding of	705.415.2.1L, Figure 705
- Overhead lines and cables	705.522
- Protection against fire	705.422
- Protection by SELV or PELV	705.414.4
- Residual current devices in	705.411.1, 705.422.7

COPYRIGHT

- Socket-outlet circuits to be protected by RCD — 705.411.1(i) & (ii)
- Socket-outlets, selection — 705.553.1
- Statutory regulations — Appendix 2(L) Item 1(v)
- Supplementary bonding conductors, protection of — 705.544.2
- Supplementary bonding for protection of livestock — 705.415.2.1

Alarm
- Fire see *Fire alarm*
- Installations see *Voltage Band I, definition*

Alterations to installations — 132.16L, 610.4
Alternative supplies, warning notice — 514.15.1
Aluminum conductors
- Minimum cross-sectional area — 524.1

Ambient temperature
- Cables and conductors — 522.1
- Cables, rating factors — Appendix 4(L) Sec 2.1
- Definition — Part 2

Amusement device, definition — Part 2
Appliance, definition — Part 2
Appliances, Electrical equipment
- Fire hazard from — Section 421, 705.422.6
- Flexible cables for — 521.9, 553.1.6L
- In bathrooms — 701.55
- Mobile, connection of — 553.1.7
- Producing hot water or steam — 424.2
- Switching for — 537.5.1.3

Arcades, discharge lighting in — 537.6.1
Arcing
- Injury from — 131.1(vii)
- Of switchgear — 421.1.3

Arc-resistant material, use of — 421.1.3
Arm's reach
- Application — 417.3L
- Definition — Part 2, Figure 417

Armoured single-core cables — 521.5.2, 523.201
Assemblies of equipment, to comply with appropriate standards — 113.1
Assessment of general characteristics — Part 3
Authorised persons
- Access to switchgear, limited to — 422.2.2
- Installation methods — Table 4A2

Automatic disconnection of supply — Section 411
- Application of — 410.3.3
- Basic protection, requirements for — 411.2
- Circuit protective conductor to each point — 411.3.1.1
- Class II equipment allowed — 411.1
- Description of protective measure — 411.1
- Disconnection times — 411.2.3, Table 41.1
- Distribution circuits — 411.3.2.3 & 4
- Exemption from — 411.3.2.5
- Final circuits exceeding 32A — 411.3.2.3 & 4
- Final circuits not exceeding 32A — 411.3.2.2, Table 41.1, 411.3.3L
- Highway power supplies — 714.411.202
- Reduced low voltage systems — 411.8.3L
- Where cannot be achieved, supplementary bonding to be provided — 411.3.2.6L
- Exposed-conductive-parts, earthing of — 411.3.1.1L
- Extraneous-conductive-parts, main bonding to — 411.3.1.2L
- Fault protection, requirements for — 411.7.3

COPYRIGHT

- In case of fault 411.3.2
- In FELV systems 411.7
- Inspection of measures of protection 611.3(viii)c
- Mobile equipment outdoors, RCD protection required 411.3.3(ii)
- Most commonly used measure 410.3.3L Note
- Protective earthing 411.3.1.1L
- Protective equipotential bonding 411.3.1.2L
- Reduced low voltage systems 411.8
- Socket-outlets, additional protection by RCD
  - Exceptions permitted 411.8.3L
  - Not exceeding 32A and for general use 411.3.3L(i)
- Special locations, particular requirements for 415, Part 7
- Street furniture 714.411.201
- Testing Section 612

Automatic sources, safety services supplies 560.4.1
Auto-reclosing devices 530.3.5L
Autotransformers
- FELV source, not for 411.7.4L
- Use of 555.1

Auxiliary circuit, definition Part 2
Auxiliary circuits
- Conductor cross-sectional area for 557.4.1, Table 55
- Control 557.3.201
- For measurement 557.5
- Functional considerations 557.6
- General 557.3.1
- Requirements for 557.3
- Scope 557.1

Auxiliary supply for residual current device 531.2.6

B

Back-up protection
- Definition Part 2
- Requirements for 536.1, 536.4

Band I circuits see also *Voltage definition* Part 2
- Segregation of, from other circuits 528.1

Band II circuits see also *Voltage definition* Part 2
- Segregation of, from other circuits 528.1

Bare conductors
- As overhead lines, Suspended systems 715.521.106, 417.3L
- Cables connected to 526.4
- Electromechanical stresses 521.5.201
- Identification 514.4.2, 514.4.6

Bare live parts
- PELV circuits 414.4.5, 715.414
- Placing out of reach 417.3.1
- SELV circuits 414.4.5

Barrier, definition
Barriers Part 2
- Fire
- Protection by 527.2
  - Application of 416.2
  - Degrees of protection 416.2.2, 416.2.3

COPYRIGHT

o Intermediate, in enclosures	416.2.4(iii)
o Openings in	416.2.1(iii), 412.2.2.3
o Provided during erection, testing	714.411.2.201
o Removal or opening of	416.2.1, 612.4.5
o Securing of	416.2.4, 714.411.2.201
	416.2.3
Basic installation, definition	Part 2
Basic protection	Section 411
- And automatic disconnection of supply	Section 412
- And double or reinforced insulation	Section 413, 418.3.1
- And electrical separation	413.1.1(i)
- And SELV or PELV	Section 414
- Barriers or enclosures	
o Requirements for	416.2
o Testing of, where provided during erection	612.4.5
- Basic insulation	
o Of live parts	416.1
o Paint, varnish or lacquer, not suitable as	416.1
- Definition	Part 2
- Fundamental principle	131.2.1
- General requirements	410.1
- In FELV systems	411.7.2L
- In reduced low voltage systems	416.1
- Live parts, basic insulation of	611.3(viii)
- Methods of, checking	418.1.3
- Non-conducting location	417.1L & 2
- Obstacles for, only where controlled or supervised	417.3L
- Live parts shall only be accessible with a key or a tool	714.411.2.201
Basic protection and fault protection	
- Cables, wiring systems providing	412.2.4.1
- Enhanced protective provision providing	410.3.3L
- Protective measures providing both, for general application	Section 701L
Bathrooms, installations in	
- Additional protection	
o By RCDs for all low-voltage circuits	701.411.3.3
o Supplementary bonding	701.415.2
- Controls	701.512.3
- Current-using equipment	701.55
- Electrical separation	701.413
- Heating appliances, water	701.55(vii)
- IP requirements	701.512.2
- Luminaires	701.55.1L
- Pull cord switches	701.512.3
- SELV or PELV used in	701.414
- SELV socket-outlets	701.512.3
- Shaver supply unit	701.512.2, 701.512.3
- Socket-outlets	701.512.3
- Supplementary bonding	701.415.2
- Switches	701.512.3
- Towel rails	701.55(ix)
- Zones	701.32.1, Figures 701.1 &

COPYRIGHT

	701.2
Batteries	
- For safety services	560.6.10, 560.6.11
- Stationary, installations incorporating	551.8
Bell circuits see *Voltage Band I, definition*	Part 2
Bends in wiring systems	522.8.3
Body resistance, reduced	
- Swimming pools	702.11
Bonding see also *Equipotential bonding*	
- Additional protection	415.2
- Agricultural premises	705.415.2.1, 705.544.2
- Bathrooms	701.415.2
- Conductor, definition	Part 2
- Conductors	
o Main	411.3.1.2, 544.1
o Protective	Section 544
o Selection and erection of	Section 544
o Supplementary, sizing	544.2
- Connections, warning notice at	514.13.1(ii)
- Earth-free local	418.2
- Equipment in electrically separated circuits	418.3.4
- Water heaters	554.3
- Lightning protection systems	411.3.1.2, 542.4.1(iv)
- Local supplementary	411.3.2.6
- Main, to extraneous-conductive-parts	411.3.1.2
- Network, definition	Part 2
- Outdoor lighting installations, metallic structures need not be bonded	714.411.3.1.2
- Armoured single-core cables	523.201
- Supplementary see *Additional protection; Supplementary equipotential bonding*	
- Swimming pools	702.415.2, 702.55.1
- Telecommunication cable, metallic sheath	411.3.1.2
Boxes	
- For connection of luminaires	559.5.1
- For use in hollow walls	422.5 Note 3
- Junction	521.8.3
Breaking capacity	
- Overload protective devices	432.2, 536.1
- Fault current protective devices	432.3, 432.3, 536.1
British Standards	
- Additional requirements of other	110.1.3
- Compliance with	Section 511
- Exclusions from Scope	110.2L
- Reference in this Standard, list	Appendix 1(L)
Building materials, fire hazard from equipment	Sections 420, 421 & 422
Building, penetration of, load bearing integrity to be assumed	522.8.14
Building site see *Construction site*	
Bunched, definition	Part 2
Buried cables see *Cables, buried; Underground cables*	
Burns, protection against	Section 423

COPYRIGHT

Busbars and busbar connections	
- Cables connected to busbars	526.4
- Colours identification of protective conductor	514.4.2
- Selection of	521.4
Busbar trunking system, definition	Part 2
Busbar trunking systems	
- Current carrying capacity	Appendix 8(L)
- Enclosure as protective conductor	543.2.2
- Rating under fault conditions	434.5.3
- Standard for	521.4
- Voltage drop	Appendix 8(L)
Bypass bonding conductor, definition	Part 2

C

Cable	
- Channel, definition	Part 2
- Cleat, definition	Part 2
- Coupler, definition	Part 2
- Couplers	553.2
o FELV system	411.7.5
o Reduced low voltage circuits	411.8.5
o Selection	553.2
- Covers	522.8.10
- Ducting	
o Bends	522.8.3
o Definition	Part 2
o Protective conductors formed by	543.2.7
o Sealing at fire barriers	527.2
o Selection of	521.6
- Ducts	
o Bends	522.8.3
o Ingress of water	522.3.1
o Underground	522.8.10
- Enclosures	
o A.C. circuits in steel	521.5.2
o Erection	522.8
- Flexible, definition	Part 2
- Ladder, definition	Part 2
- Supports	522.8.4 & 5
- Tray, definition	Part 2
- Trunking see *Trunking systems*	
- Tunnel, definition	Part 2
Cables	
- A.C types for	521.5
- Agricultural installations	705.522
- Ambient temperature	522.1, Appendix 4(L) Sec 2.1
- Armoured single-core cables	523.201
- Attack by fauna	522.10
- Bends	522.8.3
- Buried	433.1.203, 522.8.10, 523.3
- Colour identification	514.4
- Concealed in walls or partitions	522.8.2
- Conductors, cross-sectional area of	132.6, Section 524
- Connected to bare conductors or busbars	526.4

COPYRIGHT

- Connections — 134.1.4, Section 526
- Core identification — 514.3
- Corrosive or polluting substances in contact with — 522.5
- Current-carrying capacity — Section 523, Appendix 4(L)
- Damage by
  - Fauna — 522.10
  - Flora — 522.9
  - Impact — 522.6
  - Mechanical stresses — 522.8
  - Solar radiation — 522.11
  - Vibration — 522.7
- Electromagnetic effects — 521.5.1
- Electromechanical stresses — 521.5.201
- Emergency lighting — 528.1 Note 2
- Enclosures, in onerous dust conditions — 522.4
- External influences — Section 522
- Extra-low voltage systems — 411.7, 414.4
- Fire alarms — 528.1 Note 2
- Fire barriers — 527.1
- Fixings *see Supports*
- Flame propagation requirements — 527.1.3
- Flexible
  - Appliances, for — 521.9, 522.2.201, 553.1.7
  - Ceiling roses — 559.5.1.201 & 2, 416.2.4L
  - Current-carrying capacity — Appendix 4(L), Tables 4F1A to 4F3A, Section 526
  - Equipment, connections to — 521.9.2
  - Identification of conductors — 514.3
  - Luminaires — 522.7.2, 559.5.2
  - Mass supportable by pendant — Table 4F3A
  - Segregation of circuits in — 528.1
  - Selection of — 521.9, Appendix 4(L)
  - Separated circuits — 413.3.4, 418.3.6
  - Use of — 521.9.1
- Grouping — 523.5L, Appendix 4(L) Sec 2.3
- Identification of cores — Section 514
- In conduit and trunking — 522.8.2
- Information technology, minimum separation distances — 132.3
- In ground see also *Underground cables*
- In saunas — 433.1.203, 522.8.10, 523.3
- Installed under floors or above ceilings — 703.52
- In walls or partitions — 522.6.201
- Joints — 522.6.202L to 204L
- Lift shafts — 560.7.8L
- Low temperatures in — 528.3.5
- Rating factors — 522.1
- Segregation from other electrical and non-electrical services — 527.1
- Selection and erection — Chapter 52, Appendix 4(L)
- Single-core — 523.201
- Supports, general — 522.8.4 & 5
- Telecommunication, see *Telecommunication circuits*
- Temperatures for see *Temperature*
- Terminations
- Thermal insulation, in — Section 526; 523.9L, Table 4A2 (Nos.100-103)
- Underground, see *Underground cables*
- Vibration — 522.7

COPYRIGHT

- Voltage drop — Section 525 & Appendix 4(L) Sec 6
- Water or moisture in contact with — 522.3

Capacitive electrical energy, discharge of — 537.2.1.4 to 559.7
Capacitors, compensation, luminaires — 559.7
Capacitor, warning label required — 416.2.5
Cartridge fuse link, definition — Part 2
Catenary wires — Table 4A2 (No. 35)
Cathodic protection systems, the Code not applicable to d.c side — 110.2L(xiii)
Ceiling roses
- Application of — 559.5.1
- Exemption from requirements for enclosures — 416.2.4L Note
- Multiple pendants — 559.5.1.202
- Pendant luminaires, suitability for mass of — 559.5.2
- Voltage limitation — 559.5.1.201

Ceilings, cables above, mechanical damage — 522.6.201
Ceilings, thermally insulated, cables above — 523.9L
Central heating — 411.3.1.2L
Certification and reporting — Chapter 63
Changeover time see *Safety services*
Characteristics, general, of installation — Part 3
Characteristics, time/current, overcurrent devices — 432.4L, Appendix 3
Charging system - electric vehicle — Section 722L
Charts see *Diagrams*
Circuit, definition — Part 2
Circuit arrangements
- Division of installation — Section 314
- Household and similar premises — Appendix 15(L)

Circuit breaker
- Definition — Part 2
- Linked
  - Definition — Part 2
  - In earthed neutral — 132.14.2

Circuit-breakers
- As fault protection — 411.4.7, 411.8.3
- Breaking capacity — Section 432, 434.5.1 and 435.1
- Coordination of series devices — Section 536
- Electrode water heaters and boilers, for — 554.1.2, 554.1.7
- Emergency switching — 537.4.2.3
- Fault current protection by — 432.1, 432.3, 434.5 & Section 435
- Overcurrent settings
  - Coordination — Section 435, 536.1
  - Precautions to be taken, where ordinary person may operate device — 533.1.2
  - Overload protection by — 432.1 & 2
  - Rated current to be indicated — 533.1

Circuit disconnection times see *Disconnection times*
Circuit impedances, for automatic disconnection — 411.4.5, 411.5.3
Circuit protective conductor, definition — Part 2
Circuit protective conductor, of ring circuit — 543.2.9, 543.7.2.201
Circuits
- Arrangements, household and similar premises — Appendix 15(L)
- Auxiliary — Section 557
- Bands I and II see *Bands I circuits; Band II circuits*
- Class II, protective conductors in — 412.2.2.4, 412.2.3.2
- Control see *Control circuits*

COPYRIGHT

- Division of installation into — 314.1
- Electrically separated, arrangement of — 413.3, 418.3
- Final see *Final circuits*
- Isolation — 537.2.1
- Number and type of — 132.3, Section 314
- Ring see *Final circuit, ring*
- Safety services — 560.7
- Segregation between — 515.2, 528.1
- SELV and PELV, arrangement of — 414.4
- Separation of — Section 314, 414.4, 560.7.7
- Switching of — 537.5.1.1

Classification
- External influences — Chapter 32, Appendix 5(L)
- Safety services sources — 560.4.1

Class I equipment, definition — Part 2
Class II equipment, definition — Part 2
Class II equipment or equivalent insulation see *Double or reinforced insulation*
Class III equipment
- Definition — Part 2

Clinics see *Medical locations*
Clocks, plugs and socket-outlets for — 553.1.5L(i)
Code of Practice
- Approved — 114.1L
- British Standard — Appendix 1(L)

Colour
- Emergency switching devices — 537.4.2.4
- Firefighter's switch — 537.6.4(i)
- Identification of cables and conductors — Section 514, Appendix 7(L)
- Identification of flexible cables — Section 514, Table 7D

Combined protective and functional purposes
- Earthing arrangements for — 542.1.1, 543.5.1

Combustible duct, presence of, applicability of the Code — 110.1.3(iv)
Compatibility, electromagnetic — Section 332
Compatibility of equipment — 331.1L, 512.1.5
Compliance with
- Standards — Section 511

Concealed cables in walls or partitions — 522.6.202L to 204L
Concise list of external influences — Appendix 5(L)
Concrete, steel reinforcement see *Steel*
Condensation in wiring systems — 522.3.1, 522.3.2
Conducting location with restricted movement, definition — Part 2
Conducting locations with restricted movement
- Automatic disconnection of supply — 706.411
- Electrical separation, source to be outside location — 706.413
- Fixed equipment, supply to — 706.410.3.10(iii)
- Functional earthing of equipment, bonding to be provided — 706.411.1.2
- Hand-held tools, supply to — 706.410.3.10(i)
- Hand lamps, supply to — 706.410.3.10(ii)
- Protection against electric shock — 706.41
- Protective measures permitted — 706.411.1.1
- Scope — 706.1
- SELV and PELV
  - Requirements for circuits — 706.414.4L
  - Sources for, to be outside location — 706.414.3

Conductive parts see *Exposed-conductive parts; Extraneous-conductive parts*
Conductive parts in Class II enclosures — 412.2.2.4

COPYRIGHT

Conductors
- Aluminium see *Aluminium conductors*
- Ambient temperature 522.1
- Bare, cables connected to a bare conductor 526.4
- Bends 522.8.3
- Bonding connections see *Bonding conductors*
- Colour identification Appendix 7(L) No.6
- Corrosive or polluting substances 522.5
- Current-carrying capacity Section 523, Appendix 4(L)
- Electromechanical stresses 521.5.201
- External influences 512.2
- Joints Section 526
- Mechanical stresses 522.6 to 8
- Neutral, cross-sectional area 523.6, Section 524
- Overhead see *Overhead lines*
- Parallel 433.4, 434.4, 523.7
- Protective see *Protective conductors*
- Selection and erection Chapter 52
- Soldered 526.2
- Support, general 522.8.4 & 5

Conduit and conduit systems
- Bends 522.8.3
- Cables in 522.8
- Definition Part 2
- Drainage of 522.3.2
- Erection to be completed before drawing in 527.1.5
- Fixing see *Supports*
- Joints 543.3.6
- Materials, British Standards 521.6
- Metallic, accessories in 543.2.7
- More than one circuit in 521.6
- Non-metallic 521.6, 522.1.2
- Passing through floors and walls 527.2
- Protective conductor formed by 543.2 & 3
- Sealing 527.2
- Underground 522.8.10
- Water in 522.3.2

Connections, electrical
- Heating units, cold tails 134.1.4, Section 526
- Where particular risk of fire 422.3.5(ii)

Connector, definition Part 2
Connectors, clock 553.1.5(i)
Consequences of overvoltage, risk assessment 534
Construction of equipment, applicability of the Code to 113.1
Consumer unit
- Definition Part 2
- For domestic premises, enclosure requirement 421.1.6

Contractors, emergency switching by 537.4.2.3
Continuity of service Chapter 36
Continuity tests 612.2
Continuous monitoring 622.2
Control, motor 537.5.4
Control, overvoltage 534
Control circuit see *Voltage Band I, definition* Part 2
Control circuits see also *Auxiliary circuits*
- Conductors, minimum cross-sectional area of Table 55.2
- Design, arrangement and protection of 557.3.201
- Emergency switching by means of 537.4.2.2 Note 1

COPYRIGHT

- Identification of — Table 51
- Motor, designed to prevent danger — 537.5.4.1
- Switching off for mechanical maintenance by interruption of — 537.3.2.1

Controlgear see *Switchgear*
Controls in bathrooms — 701.512.3
Coordination
- Back-up protection — 536.4
- Between conductor and overload protective device — 433.1
- Of overload and fault current protection — Section 435
- Of switching and overcurrent protective devices — 536.5.1
- Motor starter with fault current protective device — 435.2, 536.5.2
- Selectivity
  - Between overcurrent protective devices in series — 536.2
  - Between RCDs — 536.3

Convertors, static see *Static convertors*
Cord operated switches in bathrooms — 701.512.3
Correction factors see *Rating factors*
Corrosion
- Cables, general — 522.5
- Earth electrodes — 542.2.3
- Earthing conductors — 542.3
- Wiring systems — 522.5

Coupler, cable see *Cable coupler*
Coupler see *Luminaire supporting coupler*
Criteria, relevant — 610.3, 612.1
Cross-sectional area of conductors and cables — 132.6, Section 524
Current
- Circulating, precautions to limit — 551.5.2
- Maximum demand — Section 311
- Nature of — 313.1(ii)
- Protective conductor, high — 543.7
- Rated, of fixes and circuit-breakers — Section 533
- Suitability of equipment for — 512.1.2

Current-carrying capacity
- Buried cables — 433.1.203, Appendix 4(L)
- Busbar trunking systems — Appendix 8(L)
- Cables and conductors — Section 523, Appendix 4(L)
- Definition — Part 2
- Effective — Appendix 4(L) Section 5.4
- Neutral of polyphaser circuit — 524.2.3L(i)
- Parallel conductors — 433.4, 434.4, 523.7 & Appendix 10(L)
- Variation along route — 523.8

Current-carrying conductors, arrangements of — 312.1
Currents
- Harmonic see *Harmonic currents*
- Starting — 331.1L(v), 552.1.1

Current transformers, omission of overload protection — 433.3.3(iii)
Current-using equipment
- Definition — Part 2
- Power demand — 133.2.4, 512.1.4
- Selection and erection of — Section 554
- Cyclic loads, overload protection for — 533.2.1

COPYRIGHT

D

Danger, definition	Part 2
Danger notices see *Warning notices*	
Danger of fire, particular risks	Section 422
D.C systems, types	528.2 Note 1
Defects	621.2L
Definitions	Part 2
Degree of protection (IP)	
- Agricultural, horticultural premises	705.414.4.5(ii), 705.512.2
- Barriers and enclosures	
o General	416.2.1, 416.2.2
o Provided during erection, testing of	612.4.5
- Bathrooms, showers	701.414.4.5(ii), 701.512.2
- Floor and ceiling heating systems	Appendix 1(L)
- Insulating enclosure, barrier in	412.2.2.3
- Intermediate barrier in enclosure	416.2.4(ii) & (iii)
- Location with risk of fire	
o ELV circuit, live parts of	422.3.11(i)
o Luminaires	422.3.8(ii)
o Switchgear	422.3.3(ii)
- Non-sheathed cables, trunking containing	521.10.1
- Obstacle, arm's reach from	417.3.2
- Special locations, other	Part 7
- Swimming pools, fountains	702.414.4.5(ii), 702.512.2
- Wiring system	521.10.1, 522.3.1, 522.4.1 & 527.2.3
Demand, maximum, assessment of	Section 311
Demand, maximum, suitability of supply for	313.1(v)
Departures from the Code	120.3, 133.5
Design, economic and reliable	311.1
Design current, definition	Part 2
Deterioration	543.3.1, 559.5.6
Device for connecting a luminaire (DCL), definition	Part 2
Devices for connecting luminaires	
- Fixed lighting point, use at	559.5.1
- In FELV system	411.7.5
- In reduced low voltage system	411.8.5
- Not in circuit relying on double insulation	412.1.3
Devices for protection against overvoltage	Section 534, Appendix 16
Diagrams, provision of	514.9.1
- For safety services	560.7.9
- Medical locations	A.514.9.1
Diagrams, availability for inspection and testing	610.2L
Dielectric, flammable liquid	421.1.5, 422.2.3
Direct contact, protection against see *Basic protection*	
Discharge lighting	
- Firefighter's switch	537.6.1
- Isolation	537.2.1.6
- Requirements not applicable to	559.1
Discharge of energy, for isolation	537.2.1.4
Disconnection times	
- Distribution circuits and final circuits over 32 A	411.3.2.3, 411.3.2.4
- Fault current clearance	434.5.2L
- Final circuits exceeding 32 A	411.3.2.2L
- Highway supplies and equipment	714.411.202
- Reduced low voltage systems	411.8.3L
Disconnector	

COPYRIGHT

- Definition — Part 2
- Functional switching, not for — 537.5.2.3

Discrimination see also *Coordination*
- Agricultural, ventilation circuits for livestock rearing — 705.560.6
- Definition — Part 2
- Overcurrent protective devices — 536.2
- Residual current devices — 531.2.9

Distribution board, definition — Part 2

Distribution circuit
- Definition — Part 2
- Disconnection time for
  - TN system — 411.3.2.3
  - TT system — 411.3.2.4

Distributors
- Cut-out, for isolation of highway power supply — 714.537.2.1.202
- Equipment, suitability for additions to installation — 132.16L
- Fault current device, protection by — 434.3(iv)
- Overload device, protection by — 433.3.1(iii)
- To be consulted — 312.1L

Distributor's network
- Isolation and switching — 132.15
- The Code not applicable to — 110.2L(i)

Diversity, may take account of — 311.1

Division of installation — Section 314

Documentation to be provided for every installation — 132.13

Doors
- In class II enclosures — 412.2.2.3
- In street furniture — 714.411.201

Double insulation
- Definition — Part 2
- Of equipment — 412.2.1

Double or reinforced insulation
- Application of — 412.1.1
- Conductive parts, connection to protective conductor prohibited — 412.2.2.4
- Conductive parts not to traverse enclosure — 412.2.2.2(i)
- Degree of protection
  - Barriers within enclosures — 412.2.2.3
  - Enclosures — 412.2.2.1
- Description of protective measure — 412.1
- Enclosures of equipment — 412.2.2
- Equipment to be Class II or equivalent — 412.2.1.1
- Exposed-conductive-parts not to be connected to protective conductor — 412.2.2.4
- Identification of Class II equipment — 412.2.1.1 Note
- Inspection — 611.3(viii)(a)
- Lids or doors in enclosures — 412.2.2.3
- Not applicable where circuit includes a socket-outlet or similar device — 412.1.3
- Protective conductors in relation to — 412.2.2.4
- Reinforced insulation during erection — 412.2.1.3
- Removable screws or fixings not permitted — 412.2.2.2(ii)
- Solar photovoltaic power supplies, Class II preferred on D.C side — 712.412, 412.2.1.2
- Supplementary insulation during erection — 412.2.4
- Wiring systems — 522.3.2

Drainage of conduit systems — 560.7.10

Drawings for safety installations — 560.7.10

COPYRIGHT

Duct, definition — Part 2
Duct see *Cable ducts*
Ducting see *Cable ducting*
Dust, presence of — 522.4.2

E

Earth
- Connections to — Section 542
  - Necessity for additional — 331.1L(xi)
- Currents, high — 543.7
- Definition — Part 2

Earth electrode
- Definition — Part 2
- Network, definition — Part 2
- Resistance
  - Allowance for corrosion — 542.2.1
  - Allowance for soil drying and freezing — 542.2.4
  - Area, definition — Part 2
  - Definition — Part 2
  - TT and IT systems in general — 411.5, 411.6
  - Test of electrode resistance — 612.7

Earth electrodes, Suitable — 542.2.3L
Earth fault current
- Adequacy of earthing arrangements for — 542.1.3.1 to 3
- Definition — Part 2

Earth fault loop impedance
- Definition — Part 2
- External to installation, to be determined — 313.1(iv)
- For automatic disconnection for fault protection, general — 411.1L
- Measurement — Appendix 14(L)
- Reduced low voltage systems — 411.8
- Testing — 612.9L

Earth-free local equipotential bonding, protection by — 418.2
Earth-free location see *Non-conducting location*
Earth leakage current see *Protective conductor current: Leakage current*
Earth loop impedance see *Earth fault loop impedance*
Earth monitoring — 543.7.1.202L, 543.3.4
Earthed equipotential bonding and automatic disconnection see *Automatic disconnection of supply* — 411.8.3L, 418.2
Earthing
- Arrangements — Section 542
- Combined protective and functional purposes — 543.5
- Conductor, Types of — 543.2
- Conductors, electrode boilers — 554.1
- Conductors, selection and erection — 543
- Connections, warning notice at — 514.13
- Definition — Part 2
- Exposed-conductive-parts
  - FELV systems — 412.2.2.4, 543.3.5L
  - General requirements — 411.3.1.1L
  - IT systems — 418.2.3
  - Reduced low voltage system — Section 542
  - TN-S systems — 411.4.2, 312.2.1.1L
  - TT systems — 411.5
- High protective conductor currents — 543.7

COPYRIGHT

- Impedance
    - Measuring of — 542.1.1, 543.5 Appendices 13(L) & 14(L)
- Neutral point or midpoint of reduced low voltage source — 411.8.4.1L
- Neutral supply of — 554.1.5 to 7
- Prohibited, in earth-free local bonded location — 418.2.3
- Prohibited, in non-conducting location — 418.1.3
- Resistance
    - Provision for measurement of — 542.4.2
    - Variations in — 542.2.1, 542.2.4
- System
    - Global — 422.2.1L
    - Types of — 312.2
- Terminal, main
    - Connection to Earth — 542.1.201
    - Definition — Part 2
    - Provision of — 542.4

Economic design of installation — 311.1
Electric braking, with emergency stopping — 537.4.2.2 Note 2
Electric shock
- Current see *Shock current, definition*
- Definition — Part 2
- Emergency switching where risk of — 537.4.1.2
- In case of fault see *Fault protection*
- In normal service see *Basic protection*
- Protection against — Chapter 41
- Safety services — 560.6.8.1, 560.7.6

Electric surface heating systems — 110.1.3L(vii)
Electrical connections see *Connections, electrical*
Electrical equipment see *Equipment*
Electrical installation, definition — Part 2
Electrical Installation Certificate
- Departures from the Code to be noted — 120.3, 133.5
- Form of — Appendix 6(L)

Electrical Installation Condition Report
- Form of — Appendix 6(L)
- Inspection schedule — Appendix 6(L)

Electrical interference — 528.2 Note 1
Electrical separation, protection by
- Application of — Section 413, 418.3
- Basic protection — 413.1
- Bonding of equipment — 413.2
- Disconnection where two faults occur — 418.3.4
- Exposed metalwork of circuit — 418.3.7
- Flexible cables for — 413.3.6, 418.3.4
- For several items of equipment — 413.1.2
- Protective conductors for — 413.1.3, 418.3
- Separation of circuit — 418.3.6
- Socket-outlets for — 413.3.2, 413.3.3
- Supplies for — 418.3.5
- Testing of — 413.3.2
- Voltage limitation — 612.4.3
- Wiring systems for — Section 413
- Applicable to places of work activity — Section 511
- Compliance of installations with — Section 511
- Further guidance on — Section 511
- Failure of consumer's installations to comply with — Section 511
- Definition — Part 2
- Selection and erection of — 554.1

COPYRIGHT

- Electrodynamic effects see *Electromechanical: Electromagnetic*
- Electrodynamic effects on protective conductors 543.3.1

Electrolysis, precautions against
- Earthing arrangements 542.1.3.2
- Wiring system metalwork 522.5.2

Electromagnetic compatibility
- Equipment Section 332
- Immunity levels of equipment 332.1, 515.2
- Installations 332.2

Electromagnetic disturbances, measures against 131.6L
Electromagnetic effects in cables 521.5
Electromagnetic interference, measures to reduce 521.5
Electromechanical stresses
- Conductors and cables 521.5.201
- Earthing arrangements 542.1.3.1L

Electronic devices see also *Semiconductor devices*
- As safety source for SELV or PELV systems 414.3(iv)
- Testing of circuit including 612.3.3

Emergency control, fundamental principle 132.9
Emergency lighting
- Segregation from other circuits 528.1 Note 2
- Standard for 560.9
- Supplies for Chapters 35 & 56

Emergency stopping
- Definition Part 2
- Including electric braking 537.4.2.2 Note 2

Emergency switching
- Definition Part 2
- Machines 537.4.1
- Plug and socket-outlet not to be selected for 537.4.2.8
- Provision of 537.4
- Selection of devices for 537.4.2

Enclosure, definition Part 2
Enclosures
- Accessibility to equipment within 513.1
- For joints and terminations 526.5
- Protective conductors formed by 543.2.2
- Provided during erection, testing of 612.4.5

Enclosures, protection by
- Arc-resistant, for fixed equipment 421.1.3(i)
- Class II or equivalent 412.2.1.1
- Degrees of protection 416.2.1 & 2
- Fire-resistant, for fixed equipment 421.1.2(i)
- Lids or doors in 412.2.2.3, 714.411.201
- Openings in 416.2.1
- Provided during erection, testing of 612.4.5
- Removal or opening of 416.2.3

412.2.2.3, 416.2.4L, 132.12

Energy, discharge of stored electrical 537.2.1.4
Environmental conditions, fundamental principle see also *External influences*
Equipment
- Accessibility 712.513, 132.12, Section 513
- Agricultural and horticultural premises Section 705
- Class II, Definition Part 2
- Compatibility of Chapter 33
- Construction 421.1.6, 422.1.2

COPYRIGHT

- Containing flammable liquid — 421.1.5, 542.2.6
- Current-using, definition — Part 2
- Current-using, requirements — 701.55.L
- Definition — Part 2
- Electromagnetic compatibility of — Section 332
- Environmental conditions, exposed to — 132.5
- Erection of — 421.1.2
- Fixed
    - Accessibility for maintenance — 513.1
    - Definition — Part 2
    - Disconnection times for — 411.3.2
    - Earth fault loop impedance — 612.9L, Tables 41.2 to 4
    - Functional testing of — 612.13
    - Fundamental, protective equipment — 132.8
    - Guarding, against burns — 423.1
    - Having bare live parts — 417.3.1
    - Heat dissipation — 421.1.2(iii)
    - Incorporating motors — 552.1.2
    - Inspection of — 611.2
    - Isolation and switching of — Section 537
    - Mechanical maintenance, switching off for — 537.3
    - Sources for safety services — 560.6.2
- Impulse category of — 534.2.3.1.2
- Insulation of live parts — 416.1
- Mobile
    - Definition — Part 2
    - In non-conducting location — 418.1.6
    - Outdoors, protection by RCD — 411.3.3(ii)
- Oil-filled — 421.1.5
- Operational conditions — 512.1
- Portable see *Mobile*
- Selection of — Section 511
- Stationary, definition — Part 2
- Suitability for maximum power demand — 553.1.7 133.2.4, 512.1.4
- Surface temperature of — 421.1.2
- Swimming pools — Section 702
- Testing of — Part 6
- Type-tested — 412.2.1.1

Equipotential bonding see also *Bonding: Supplementary equipotential bonding*

- Additional protection — 415.2
- Agricultural premises — 705.415.2.1L
- Bathrooms — 415.2
- Conductors
    - Main — 411.3.1.2
    - Selection and erection of — Section 705
    - Supplementary — 544.2
    - Supplementary, sizing of — 705.544.2
- Definition — Part 2
- Earth-free local — 418.2
- Local supplementary, general — 411.3.2.6
- Main — 411.3.1.2
- Outdoor lighting installations, metallic structures need not be bonded — 714.411.3.1.2
- Protective — 411.3.1.2L
- Safety separated circuits, in — 418.3.4
- Swimming pools — 702.415.2, 702.55.1
- Testing of — 612.2.1

COPYRIGHT

Erection of equipment	Part 5
Escape route (Emergency)	
- Definition	Part 2
- Switchgear and control gear located in	422.2.2, 422.2.3
- Wiring systems	422.2.1L
Explosive atmospheres see *Potentially explosive atmospheres*	
Exposed-conductive-part, definition	Part 2
Exposed-conductive-parts	
- Additional protection	410L, 410.3.2L
- Agricultural and horticultural premises	410.1, 705.415.2.1
- Automatic disconnection in case of fault	411.3.2
- Conducting locations with restricted movement	410.3.5
- Connection, for earthing and automatic disconnection	
o IT system	411.6.2, 411.6.4
o Protective earthing	411.3.1L
o Reduced low voltage systems	411.8.3
o TN systems	411.4.2
o TT system	411.5.1
- Earth-free local bonded location	418.2
- Electrical separation	413.3.6, 418.3
- Exemptions from fault protection	410.3.9(iii)
- Functional extra-low voltage systems	411.7.3
- High protective conductor current equipment	543.7
- Local bonding of	415.2
- Non-conducting location	418.1.2, 418.1.4
- Of equipment, not as protective conductor	543.3.5
- Placing out of reach	417.3.1
- Protective conductors	411.3.1.1L
- SELV or PELV circuits	414.4.1, 414.4.4
- Static convertors	551.4.3.3
- Swimming pools	702.415.2
Extensions to installations	610.4
External influence, definition	Part 2
External influences	
- Classification of	Appendix 5(L)
- Earthing arrangements to be suitable for	542.1.3.1(iii)
- Equipment to be suitable for	714.512.2, 512.2
- Outdoor lighting, street furniture	701.32, 714.512.2
- Selection and erection of equipment in relation to	Section 522
Extra-low voltage see also *Voltage, extra-low; Functional extra-low, Protective extra-low, Separated extra-low voltage*	
- Application	411.7.1, 414.1
- Definition	Part 2
- Provided by SELV or PELV	Section 414
Extra-low voltage lighting installations: Lighting installations – extra low voltage	411.7.4L
Extraneous-conductive-part, definition	Part 2
Extraneous-conductive-parts	
- Additional protection	415.2.2
- Agricultural premises	705.415.2.1
- Automatic disconnection of supply	Section 411
- Bathrooms	701.415.2
- Bonding of	411.3.1.2, 415.2
- Conducting locations with restricted movement, PELV circuits in	706.410.3.10
- Earth-free local bonded location	418.2
- Electrical separation	418.1.4(i)
- In non-conducting locations	418.1.2(ii)

COPYRIGHT

- Outdoor lighting, metallic structures need not be bonded 714.411.3.1.2
- Placing out of reach 417.3.1
- Propagating potential outside non-conducting location 418.1.7
- Swimming pools 702.415.2

F

Fault, definition Part 2
Fault current see also *Short-circuit current*
- Definition Part 2
- Prospective see also *Prospective fault current; Prospective short-circuit current* Sections 430 & 434
- Protection against
  - Conductors in parallel 434.4
  - Devices for 432.1, 432.3, Section 435
  - Omission of devices for 434.3
  - Position of devices for 434.2

Fault protection see also Automatic disconnection of supply
- Additional protection 411.3.3, Section 415
- Automatic disconnection in case of fault 411.1(ii), 411.3.2
- Definition Part 2
- Double or reinforced insulation 412.1.1(ii) 412.2
- Electrical separation 413.3.1L
- Functional extra-low voltage systems 411.7.3
- Fundamental principle 131.2.2
- Generating sets, where installation includes 551.4
- Inspection and testing Chapter 62
- Omission of certain items of equipment 410.3.9
- Reduced low voltage systems 411.8.3L
- Scope of requirements 430.1, 410.1
- SELV or PELV systems 414.2L
- Single fault conditions, provided for Section 410L
- Special locations Part 7
- Special measures Section 418L

Fauna, hazard to wiring system 522.10.1
Feedback, d.c 331.1L(ix)
FELV see *Functional extra-low voltage*
Ferromagnetic enclosures 521.5.1
Filters, presence of 551.4.3.3.2
Final circuit, definition Part 2
Final circuits
- Arrangement of, general Section 314
- Connection to separate ways 314.4
- Control of 314.2
- Disconnection times, for earthing and automatic disconnections 411.3.2.2L
- Earth fault loop impedances 612.9L
- Number of points supplied 314.3
- Number required 314.3
- Radial
  - Arrangements for household and similar premises Appendix 15(L)
  - To supply equipment producing high protective conductor current 543.7.2.201(ii)
- Ring
  - Arrangements for household and similar premises Appendix 15(L)
  - Continuity test 612.2.2, Appendix 6(L) Sec 2
  - Definition Part 2

COPYRIGHT

○ Overload protection of	433.1.204L
○ Protective conductor of	543.2.9
○ To supply equipment producing high protective conductor current	543.7.2.201(i)
- Separate control of	314.2
- Separation of	314.4
Fire alarm systems	
- Segregation from other circuits	528.1 Note 2
- Standard for	110.1.3(v)
- Supplies for	611.3 (vii)
Fire authority, local, sitting of firefighter's switch	537.6.3
Fire barriers	527.1, 611.3(vii)
Fire conditions, safety services for	Chapters 35 & 56
Fire extinguishing devices, omission of overload protection in circuits supplying	433.3.3(iv)
Fire, protection against	
- Agricultural installations	705.422, 422.3
- Applicability of the Code to	131.1(ii)
- Circuits for safety services	560.7.2
- Consumer units, domestic	421.1.201
- Devices for	Section 532
- Equipment containing flammable liquid	421.1.5
- Equipment enclosure constructed during erection	421.1.5
- Equipment, fixed	421.1.2 to 4
- Flame propagation requirements of wiring systems	422.3.4L
- Heat dissipation of equipment	422.4.204L, 712.512.2.1
- Surface temperature of equipment	421.1.2
- Thermal radiation	131.3.2, 420.1(i)
- Where particular risks	Section 422
Firefighter's switch	
- Provision of	537.6
- Selection of	537.6.4
Fire-resistant	
- Screens or enclosures for equipment	421.1.2, 421.1.3, 421.1.6
- Structural elements, cables passing through	560.8.1L(ii) & (iii)
Fixed equipment see also *Equipment, fixed*	
- Definition	Part 2
- Heat dissipation	422.4.202L
Fixing of luminaires	559.5.2
Flammable dielectric liquid, in equipment	421.1.5
Flexible cable, definition	Part 2
Flexible cable see *Cables, flexible*	
Flexible cord see *Flexible cable*	
Floor and ceiling heating systems	526.3L(iii)
Floors	
- Cables passing through	522.6.201
- Cables under	418.2.4
- Conductive, in earth-free bonded location	418.1.5
- Insulating, resistance of	522.8.7
- Wiring system buried in	522.8.10, 523.3
Flora, hazard to wiring system	522.9.1
Fluctuating loads see *Cyclic loads*	
Forced air heating systems	424.1
Foreign Standards	511.1
Foundations used for earthing	542.2.3(iv)
Fountains see also *Swimming pools*	
- Equipment, mechanical protection of	702.55.2

COPYRIGHT

- Luminaires in zones — 702.55.3
- Protective measures — 702.410.3.4.2
- Scope of requirements relating to — 702.522.23
- Special requirements — 702.55.4
- Zones — 702.32, Figures 702.3 & 702.4
- Zone 2 not applicable — 702.32(iii)

Frequency
- Effect on current-carrying capacity of conductors — Appendix 4(L) Sec 6.6
- High, oscillations — 534.2.3.1.1L, 331.1L
- Of periodic inspection and testing — 331.1L(x)
- Suitability of equipment for — 622.1
- Supply, assessment of — 133.2.3, 512.1.3

Functional bonding conductor, definition — Part 2

Functional earthing
- Definition — Part 2
- Equipment with high protective conductor currents — 543.7
- Protective earthing in relation to — 542.1.1, 543.5.1

Functional extra-low voltage FELV, definition — Part 2

Functional extra-low voltage systems
- Application of — 411.7.1
- Basic protection for — 411.7.2L
- Exposed-conductive-parts of — 411.7.3
- General — 411.7.1L
- Plugs, socket-outlets, etc of — 411.7.5
- Primary circuit of — 411.7.3, 411.7.4
- Sources for — 411.7.4L

Functional switching
- Definition — Part 2
- Provision of — 537.5
- Selection of devices for — 537.5.2, Table 53.4L

Fundamental principles — Chapter 13

Fuse, definition — Part 2

Fuse carrier, definition — Part 2

Fuse element, definition — Part 2

Fuse elements, for semi-enclosed fuses — Appendix 3

Fuse link, definition — Part 2

Fuse links
- Marking of intended type — 533.1.1.2L(i)
- Non-interchangeability of — 533.1.1.2L(ii)
- Removable whilst energised — 533.1.1.2L
- Replaceable by ordinary person — 533.1.1.2L

Fuse plugs — 553.1

Fuses see also *Overcurrent protective devices*
- Accessible to ordinary persons — 531.1.1.2L
- Fault protection by — 533.1.1.3
- Functional switching, not to be used for — 537.5.2.3
- In plugs — Appendix 1(L) *SS 167 : 1977(2012)*
- Marking of — Appendix 3
- Non-interchangeability of links — 533.1.1.2L(ii)
- Overload and fault protection by — 432.1
- Overload protection by — Appendix 4 (L) Sec 5
- Prohibited in earthed neutral — 132.14.2
- Rated current to be indicated — 411.8.3L
- Selection of — Table 55.1L
- Semi-enclosed
  - Elements for — Appendix 4(L) Secs 5 & 6, Appendix 3 Figures 3A2(a) &

COPYRIGHT

	3A2(b) and Appendix 1(L) *BS 3036 : 1958(2012)*
○ Overload protection by	Appendix 4(L) Sec 5
- Shock protection by	411.4.6, 411.4.8
- Single pole	132.14.1
Fusing factor	533.1.1.2L(ii)
G	
Gangways see *Operating and maintenance gangways*	
Gas installation pipe, definition	Part 2
Gas meters	544.1.2
Gas pipes	
- Main bonding of service	544.1.2
- Prohibited as earth electrodes	542.2.6
General characteristics of installation, assessment of	Part 3
Generating sets see also *Standby supplies*	
- Alternative to distributor's network, additional requirements	551.4.3.3
- Disconnection to prevent danger or damage	551.4.3
- Earthing arrangements for	Section 542
- Extra-low voltage	
○ Self-contained equipment, section not applicable to	551.1
○ Systems	551.3
- Fault protection	551.4
- General requirements	551.2
- Harmonic currents, circulating, effects to be limited	551.5.2
- Overcurrent protection	551.5
- Parallel operation	
○ Precautions to prevent	560.6.9L Note 2
○ With distributor's network	560.6.9L Note 2
○ Two or more generating sets	551.5.2L
- Power sources for	551.1.1
- Safety services, supplies of	551.3.2 Note
- Scope	551.1
- Static convertors, installations incorporating	551.4.3.3
- Stationary batteries, installations incorporating	551.8
Global earthing system	422.2.1
Glossary see *Definitions*	Part 2
Good worksmanship, fundamental principle	134.1.1
Guarding of equipment, against burns	423.1
H	
Harmonic currents	
- Compatibility of equipment	Chapter 33(vi)
- Due to generating set	551.5.2
- Effect of, in balanced three-phase systems	Appendix 11(L)
- Overload devices, selection to take account of	533.2.2
- Precautions to limit	560.6.9L Note 2
- Triplen	524.2.2L
Harmonic distortion	313.1L(i), 523.6.1-3, 712.55.1L and Appendix 4(L) Sec 6.5.1 & 2
Harmonic current	431.2.3
Harmonised cable core colours	Appendix 7(L)

COPYRIGHT

Harmonised Standard, definition	Part 2
Hazardous-live-part, definition	Part 2
Hazardous-live-parts not to be accessible, fundamental rule	Section 410L
Healthcare centres see *Medical locations*	
Heat dissipation of equipment	421.1.2(iii)
Heaters for water, etc	554.1 to 3
Heating appliances	
- Agricultural premises	705.422.6
- Bathrooms, for water	701.55(vii)
- Shall be fixed	422.3.202
High protective conductor currents	
- Earthing requirements	543.7
- Information to be provided	543.7.1.205
High frequency oscillations	331.1L(x)
High voltage see *Voltage, nominal definition*	Part 2
High voltage discharge lighting, firefighter's switch	110.1.2(ii), 537.6.1
High voltage electrode water heaters and boilers	554.1
High voltage luminous tube signs, licensing conditions	559.1(ii)
Highway, definition	Part 2
Highway distribution board, definition	Part 2
Highway power supply, definition	Part 2
Highway power supplies see also *Street furniture*	
- Application of section	714.1L
- Disconnection time	714.411.202
- Isolation and switching	714.537
- Isolation by distributor's cut-out, approval needed	714.537.2.1.202
- Notices, exemption from	714.1L
- Protection against electric shock	714.514.12.201
- Temporary supplies	740L
Hoist shaft, no cables shall run in a lift or	528.3.5
Horticultural premises see *Agricultural premises*	
Hospitals see *Medical locations*	
Household or similar installations	
- Circuit arrangements	Appendix 15(L)
- Main switch for	537.1.4
- Socket-outlets	553.1

I

Identification Notices	
- Colour see *Colour*	537.4.2.4
- Protective devices	514.8
IEC see *International Electrotechnical Commission*	
Immersion heaters see *Water Heaters*	
Impact, damage arising from	522.6L
Impedance	
- Circuit, for automatic disconnection	Section 411
- Earth fault loop see *Earth fault loop impedance*	
- Earthing see *Earthing impedance*	
Impulse voltage, withstand	512.1.6L
Indicators	
- Circuit-breaker overload current	Section 435, 536.1
- Firefighter's switch	537.6.4(ii)
- Fuse link, type of	533.1.1.2L(i)
- Isolation devices, operation of	514.11.1, 537.2.2.2
- Mechanical maintenance switching	537.3.2.2
- Restricted areas, warning notices	418.2.5, 418.3

COPYRIGHT

- Switchgear, operation of remote 514.1.1

Indirect contact, protection against see *Fault protection*
Inductance, effect on cable voltage drop Appendix 4(L)
Inductive electrical energy, discharge of 537.2.1.4
Industrial plugs and socket-outlets 553.1.3
Influence, mutual detrimental 132.11, Section 515
Informational technology, circuits for 132.3
Ingress protection see *Degree of protection*
Inspection see also *Verification, initial*

- Accessibility for 132.12, Section 513
- Definition Part 2
- Initial, checklist 611.3
- Initial, requirement for 134.2.1, 610.1
- Periodic
  - Alternative arrangements Chapter 62
  - Assessment for maintainability 622.2
  - Frequency of 622.1
  - Inspection schedule for domestic etc premises Appendix 6(L)
  - Notice on 514.12.1
  - Recommendations for, fundamental principle 135.1
  - Requirement for 621.1
  - Skilled person, by 621.5

Inspection and testing Chapter 62
Installation

- Circuit arrangements 132.3, Section 314
- Earthing arrangements 542.1.3
- Electrical, definition Part 2
- Erection, good workmanship 134.1.1

Instantaneous water heaters see *Water heaters*
Instructed person (electrically), definition Part 2
Instructed persons

- Fuses for operation by 533.1.1.2L
- Good workmanship by 134.1.1
- Measures permissible where supervised by 417.1L, 531.2.6, 729.513.2.2, Section 418L
- Safety services 560.6.3, 560.7.5

Insulation

- Applied during erection 412.2.1.2, 412.2.1.3
- Basic, definition Part 2
- Basic protection 416.1
- Cable, at connection to bare conductor or busbar 526.4
- Co-ordination, definition Part 2
- Definition Part 2
- Double, definition Part 2
- Double, protective measure Section 412
- Equivalent to Class Ii see Class II equipment 411.7.2
- Functional extra-low voltage circuits 134.1.4
- Joints, fundamental principle 422.2.2.2
- Live parts 416.1
- Non-conducting locations 560.5.3
- Protection by insulation of live parts 416.1
- Protective conductors Section 418L, 543.3.201, 412.2.2.4
- Reinforced 412.2.1.3
  - Applied during erection Part 2
  - Definition Section 412
  - Protective measure 612.3, 612.5, Appendix 13
- Resistance, testing 414.4

COPYRIGHT

- SELV and PELV circuits 412.2.1.2
- Supplementary, applied during erection Part 2
- Supplementary, definition 523.9L
- Thermal, cables in 528.2

Interference, electrical

Interlocking
- Enclosure openings 416.2.4(ii)
- Isolation, where equipment supplied by more than one circuit 537.2.1.3
- Main switches, where more than one source 537.1.6

IP codes see *Degree of protection*

Isolation
- Agricultural premises 705.537.2
- At origin of installation 705.537.2
- Definition Part 2
- Devices for, contact position 537.2.2.2
- Devices for, selection and erection 537.2.2, Table 53.4L
- Discharge lighting 537.2.1.6
- Discharge of stored energy 537.2.1.4
- Distributor's device 537.1.3
- Fundamental principle 132.15.201
- General requirements for 537.1, 537.2.1
- Group of circuits 537.2.1.1
- Identification of devices for 537.2.2.6
- Indication of 537.2.2.2
- Main, at origin of installation 537.1.4
- Multipole devices 537.2.2.5
- Neutral conductor 537.1.2, 537.2.1.1
- Off-load, securing against inadvertent opening 537.2.2.4
- Plugs and socket-outlets for 537.1.2, 543.4.7
- Prevention of unintentional closure Table 53.4L
- Remote devices for 537.2.2.3
- Semiconductor devices not to be used for 537.2.1.5
- Single-pole devices for 537.2.2.1
- Static convertors 537.2.2.5
- Where more than one supply, warning notice required 551.4.3.3.3, 514.11.1, 537.2.1.3

Isolator
- Contact position 537.2.2.2
- Definition Part 2
- Distributor's cut-out used as 714.537.2.1.202
- Identification of purpose 537.2.2.6
- Off-load, securing against inadvertent opening 537.2.2.4
- Selection of device as Table 53.4L
- Semiconductor devices not to be used as 537.2.2.1

IT system
- Autotransformer, step-up 555.1
- Connection of installation to Earth 542.1.2.3
- Definition Part 2
- Earthing conductor 415.2.1
- Earthing impedance Table 41.6L, 542.1.3
- Insulation of equipment in 512.1.1
- Insulation monitoring devices for A.61 & A.62, 531.6, 411.6.3.3
- Neutral distribution in 411.6.3.1
- Overload protection Appendix 4(L) Sec 5, 433.4
- Shock protective devices in 132.14

COPYRIGHT

J

Joints
- Cable, accessibility of — 526.3L
- Cable and conductor — 134.1.4, Section 526
- Conduit system — 543.3.6
- Earthing arrangements — 542.4.2
- Enclosure of — 526.5
- Protective conductor — 543.3.201, 543.3.3, 543.3.6, 543.3.201
- Where particular risk of fire — 422.3.4

Joists, cables passing through — 522.6.201

Junction boxes
- Circuits terminated in — 521.8.3
- Not permitted in zones 0 or 1 of swimming pool or fountain, except for SELV in zone 1 — 702.522.24

K

K values
- In relation to live conductors — Table 43.1
- In relation to protective conductors — Tables 54.2 to 6

Keys Tool, for
- Insulating enclosures — 714.411.2.201, 412.2.2.3
- Opening enclosures by — 416.2.4L(i)
- Swimming pools, equipment in zone 1 of — 702.55.4(ii)

L

Labels see also *Marking; Warning notices*
- At earth electrode — 514.13.1(i)
- Bonding conductor connections — 514.13.1(ii)
- Capacitor retaining charge — 416.2.5
- Main earth terminal (where separate) — 514.13.1(iii)
- PV junction boxes — 712.537.2.2.5.1
- Switchgear and controlgear — 514.1.1

Lacquer, generally not as insulation — 416.1

Lampholders
- Batten, application — 559.5.1(iii)
- Bayonet — 559.5.1.205
- Centre contact bayonet type — 559.5.1.206
- Edison screw — 559.5.1.206
- Exemption from requirements for enclosures — 416.2.4 Note
- Overcurrent protection of
- Pendant, suitability for mass suspended — 559.5.1.204
- Temperature rating — 559.5.2
- Voltage limit — 559.5.1.205, 559.5.1.201

Leakage current see also *Protective conductor current*
- Assessment of — 331.1L(vii)
- Definition — Part 2

Leakage (protective conductor) currents and residual current devices — 415.1

COPYRIGHT

Licensing, premises subject to	115.1
Lids in insulating enclosures	412.2.2.3
Life of installation, assessment of maintenance during	341.1
Lift shafts, cables in	
Lifting magnets, omission of overload protection	528.3.5L, 560.7.8 433.3.3(ii)
Lighting installations see also *Luminaires*	
- Applications, scope of	559.1
- Control of	559.5.1.207
- Extra-low voltage	
o Bare conductors permitted where stated requirements are met	Section 715
o Conductor cross-sectional area, minimum	715.521.106
o FELV prohibited	
o Fire risk, precautions	715.524
o Protective devices, location of	715.411.7.201
o SELV sources, installation of	715.422.107
o Suspended systems	715.530.3.104
o Transformers, standard for	715.521.107
o Voltage drop, limited to 5%	715.414
o Wiring systems	715.525
- Fixed lighting point, connection to wiring system	715.52
- General requirements	559.3
- High voltage signs outside scope	559.1(ii)
- Outdoor	Section 714
o Accessibility of live parts	714.411.2.201
Lightning protection system	
- Bonding of	411.3.1.2L
- Reference to standard	541.3L
Lightning protection zone, definition	Part 2
Lightning strikes, direct	421.1.1L Note 2L, 534.2.3.4.2
Lights see Luminaires	
Limitation of overcurrent, protection by source	Section 436
Limitations, periodic inspection and testing, recording of	135.1
Line conductor, definition	Part 2
Line conductors	
- Cross-sectional area of	524.1
- Identification	514.3, Table 51
- Number of loaded conductors	523.6
- Overcurrent detection in	543.1.4, Table 54.7
- Protective conductor sized in relation to	431.1
- Single pole devices	132.14.1
Line, loss of	431.1.1
Links, not to be used for functional switching	537.5.2.3
Live conductors, determination of number and type	411.6.1
Live conductors, earthing of, prohibited in IT system	312.2
Live part, definition	Part 2
Live-part, Hazardous, definition	Part 2
Live parts	
- Bare, in PELV circuits	414.4.5(iv)
- Bare, in SELV circuits	414.4.5(iii)
- Bare, placing out of reach	417.3.1
- Basic insulation	416.1
- Of SELV or PELV circuits, separation of	414.4.1, 414.4.2
Livestock	
- Equipment in locations for	705.522
- Protective measures in situations for	Section 705

COPYRIGHT

- Wiring systems in locations for 705.52

Loads
- Fluctuating see *Cyclic loads*
- Rapidly fluctuating 331.1L(iv)
- Unbalanced 331.1L(iii)

Local supplementary bonding see *Bonding: Equipotential bonding*
Locations exposed to fire risk, safety services in 560.7.2
Locations, special Part 7
Low voltage see also *Voltage, low*
- Range covered by the Code 110.1.2(i)
- Reduced 411.8.4.1L

Luminaire, definition Part 2
Luminaire supporting coupler (LSC), definition Part 2
Luminaire supporting couplers
- At fixed lighting points 559.5.1(ii)
- In FELV system 411.7.5
- In reduced low voltage system 411.8.5
- In SELV or PELV system 414.4.3
- Not in circuit relying on double insulation 412.1.3
- Purpose of 559.5.1.203

Luminaire track system see *definition of Socket-outlet* Part 2
Luminaires
- Bathrooms Section 559
- Ceiling rose for 701.55(viii)
- Compensation capacitors 559.5.1 to 3
- Extra-low voltage 559.7
- Fixing of 715.414
- Fountains 559.5.2
- General requirements 702.55.3
- Ground-recessed 559.3
- Groups having common neutral for polyphaser installations 714.512.3
- In location of increased fire risk 559.5.5
  422.3.1, 422.3.2, 422.3.8
- Mass suspended 422.4.2
- Parts of wiring system within 559.5.2
- Portable, connection of 522.2.201
- Stroboscopic effect, avoidance of 553.1.7
- Supported by flexible cables, maximum mass of 559.9
- Suspended cable connection 559.5.2
- Swimming pools 522.7.2
- Switching for 702.55.2, 702.55.4
- Symbols 559.5.1.207
- Temperature of flexible cable 559.3 Note, Table 55.3
- Thermal effects, protection against 522.2.201
- Through wiring in 559.4.1
- Track system for 559.5.3.1
- Wiring to

LV switchgear and controlgear assembly Part 2
- Definition 543.2.2
- Enclosure used as protective conductor 612.13
- Functional testing 412.2.1.1(ii)
- Having total insulation

M

Machines see also *Motors*
- Emergency stopping for 537.4.2.2 Note 2

COPYRIGHT

- Emergency switching of — 537.4, 537.4.2.1
- The Code not applicable to — 110.2L(xi)
- Rotating, exciter circuits of, omission of overload — 433.3.3(i)
- Rotating, selection and erection of — Section 552

Magnetic
- Circuit of residual current device — 531.2.2
- Fields, effect on residual current devices — 531.2.7

Magnets, lifting, omission of overload protection — 433.3.3(ii)

Main earthing terminal
- Connection to earth — 542.1.201
- Definition — Part 2
- Selection and erection of — 542.4

Main protective bonding
- Conductors, selection and erection — 544.1
- Provision of — 411.3.1.2

Main switch for installation — 537.1.4

Maintainability, assessment of — 341.1

Maintenance, definition — Part 2

Maintenance of equipment
- Accessibility for — 132.12, Section 513

Markets, covered, discharge lighting in — 537.6.1

Marking see also *Labels; Warning notices*
- Buried cables — 522.8.10
- Emergency switching devices — 537.4.2.7
- Fuses — 553.1.1.2(i)
- Isolating devices — 537.2.2.6
- Luminaires — Table 55.3
- Mechanical maintenance switching devices — 537.3.2.4

Mass, maximum supportable by flexible cables — 559.5.2, Appendix 4(L), Table 4F3A

Materials
- New, use of — 133.5
- Proper, use of — 134.1.1

Maximum demand, assessment of — 311.1

Maximum demand, suitability of supply for — 313.1(v)

Measure of protection for general application — 410.3.3

Mechanical damage see *Mechanical stresses*

Mechanical maintenance, definition — Part 2

Mechanical maintenance on switching
- Devices for — 537.3.2
- Plug and socket-outlet for — 537.3.2.6
- Requirements — 537.3

Mechanical protection
- Cables buried in ground — 522.8.7, 705.522(i) & (ii)
- Earthing arrangements — 542.1.3.1L
- Earthing conductors — 542.3
- Protective conductors — 543.2.2 to 6
- Wiring systems — 522.6.1

Mechanical stresses
- Cables and conductors — 522.8.5
- Earthing arrangements — 542.1.3.1L
- Earthing conductors — 522.8.13
- Fault current — 132.8
- Protective conductors — 543.3.1
- Wiring systems — 522.8.14

Medical locations — Annex A(L)

Metals, prevention of electrolytic action — 522.5.2

COPYRIGHT

Metalwork see also *Exposed-conductive-parts: Extraneous conductive parts*
- Bonding of 542.1.3.2
- Of other services, prohibited as earth electrode 543.2.3
- Wiring system, as protective conductor 522.5.1
- Wiring system, protection against corrosion 542.2.5

Mines, installations for
- Exclusion 110.2L(vii)
- Open-cast 110.1.3(viii)

Miniature circuit-breakers see *Circuit-breaker and Circuit-breakers*
Monitoring, definition Part 2
Monitoring devices, insulation, IT systems 411.6.3, 531.6
Monitoring, in lieu of periodic inspection and testing 622.2
Monitoring systems, earth 543.3.4
Motor control 537.5.4
Motor vehicles, the Code not applicable to 110.2L(iii)
Motors
- Automatic restarting 537.5.4.1, 552.1.3
- Control circuits 552.1.2
- Direction of rotation 552.1.1
- Reverse-current braking 537.5.4.2
- Stalled, capability of emergency switching for 537.4.2.1
- Starters, co-ordination of overload and fault protection 435.2, 536.5.2
- Starting currents 557.3.5.1, 560.7.11, 525.203

Moulded case circuit-breakers see *Circuit-breaker: Circuit breakers*
Multiple sources, d.c systems 557.3.5.4
Mutual detrimental influence
- Materials, between 132.11
- Segregation of different currents and voltages, where grouped 515.2
- Wiring systems and non-electrical services 515.1

N

Neutral
- Conductor
  - Common, for groups of luminaires on polyphase 559.5.5
  - Cross-sectional area of 132.6
  - Current-carrying capacity in polyphase circuit 524.2.3L(i)
  - Definition Part 2
  - Disconnection, provision for 537.2.1.7
  - Electrode water heaters and boilers 554.1
  - Emergency switching 537.4.
  - Fuse prohibited in 132.14.2
  - Harmonic currents 523.6.1 to 3
  - Identification of 514.4.1
  - Isolation, Devices for 537.2.2
  - Overcurrent detection in Appendix 4(L) Sec 6.5.2, 431.2
  - Single-phase two-wire circuit 524.2.1(i)
  - Single-pole devices prohibited in 132.14.2
  - Switching of 537.1.2
  - Distribution of, in IT systems 431.2.2
  - Link 537.2.2.4

COPYRIGHT

New materials and inventions, use of 133.5
Nominal voltage
- Definition Part 2
- Of supply 313.1(i)
- Reduced low voltage circuits 411.8.1.2
- SELV or PELV circuits 414.4.5

Non-conducting location, protection by
- Application of 418.1
- Basic requirements 418.1.1 to 7
- Exposed-conductive-parts 418.12
- Mobile equipment in 418.1.6
- Protective conductors prohibited 418.1.3
- Resistance of floors and walls 418.1.5

Non-flame propagating, definition Part 2
Non-sheathed cables, to be enclosed 521.10.1
Notices
- Firefighter's switch 537.6.4(i)
- High protective conductor current 514.16, 543.7.1.205
- Periodic inspection and testing 714.514.12.201
- RCD, periodic testing 514.12.2
- Warning
  - Alternative supplies 514.15.1
  - Earth-free locations 514.13
  - Earthing and bonding connections isolation of equipment 514.13
  - Non-standard colours 514.14, 514.11.1L
  - Protection by electrical separation 514.14.1, 418.3

O

Object and effects Chapter 12
Obstacle, definition Part 2
Obstacles, protection by
- Application of 410.3.5, 417.1
- Basic requirements 417.2

Off-shore installations, the Code not applicable to 110.2L(v)
Oil 421.1.5
- Filled equipment (Flammable) 411.3.1.2, 544.1.2
- Pipe / Pipework 701.415.2

Operating and maintenance gangway, definition Part 2
Operating and maintenance gangways
- Accessibility
  - Protection by barriers or enclosures 729.513.2.1
  - Protection by obstacles 729.513.2.2
- Closed restricted access areas Annex A729
- Scope and assessment 729.1, 729.3

Operating instructions, safety equipment and services 560.7.12
Operational conditions, equipment 512.1
Ordinary person
- Circuit-breakers, precautions 533.1.2
- Definition Part 2
- Fuses accessible to, type of 533.1.1.2L
- Main switch 537.1.4

COPYRIGHT

Origin of an installation	
- Definition	Part 2
- Isolation	537.2
Oscillations, high-frequency	331.1L(x)
Other services, bonding of	411.3.1.2
Outdoor lighting installations see *Lighting installations – outdoor*	
Overcurrent, definition	Part 2
Overcurrent detection	
- Definition	Part 2
- Line conductors	431.1
- Neutral conductor, TN or TT systems	431.2.1
Overcurrent, limitation by supply characteristics	Section 436
Overcurrent, protection against	Chapter 43
Overcurrent protective devices	
- At origin, assessment of	313.1(vi)
- At origin, use of distributor's device	433.3.1(iii)
- Co-ordination of characteristics, for overload and fault current protection	Section 435
- Discrimination	536.2
- Omission of	560.7.3
- Overload and fault current protection	432.1
- Overload protection only	432.2
- Selection and erection of	Section 533
- Shock protection, as	411.6.3(iv), 531.1
- Short-circuit protection only	Appendix 4(L) Sec 4, 432.3
Overcurrent settings of circuit-breakers	533.1.2
Overhead lines	
- Overvoltage protection	Appendix 16, 132.8
- Placing out of reach	417.3L
Overheating, protection against	Section 424
Overload	
- Current, definition	Part 2
- Protection against	
o Application of	433.2
o Co-ordination with fault current protection	Section 435
o Motors	552.1.2L
o Omission of	433.3
o Omitted, protection against overload may be	560.7.3
o Parallel conductors	433.4
o Position of devices for	433.2
- Protective devices	
o Requirements for	Sections 432 & 433
o Selection of	533.1 & 2
Overvoltage, protection against	
- Arrangements for control	Appendix 16, 132.8
- Atmospheric origin or due to switching	534.1L
- Devices (SPDs)	
o Connection of	534.1L, Appendix 16
o In conjuction with RCDs	534.2.2
o Overcurrent protection of	534.2.6
o Selection criteria	534.2.4
- Equipment categorisation	534.2.3
- Risk assessment	131.6.2
- Temporary, due to fault in HV or LV system	443.2.4
Overvoltages	
- Consequences, assessment of	443.2.4
- Transient	331.1L(i), 443.1.1

COPYRIGHT

P

Paint, generally not as insulation	416.1
Parallel cables, selection and erection requirements	523.7L
Parallel conductors, overload protection	433.4
Parallel conductors, fault current protection	Appendix 10L
Parallel operation of generating set	
- Prevention of with distributor's network, precautions	551.5.2L
Parallel operation, safety services, sources for	560.6.9
PELV see *Protective extra-low voltage, definition*	Part 2
Pendant luminaire	
- Flexible cable for, maximum mass supportable by	559.5.1.203
- Mass suspended	559.5.2
Penetration of building, load bearing integrity to be assured	522.7.2
Periodic inspection and testing see also *Inspection, periodic*	
- Assessment	341.1(i)
- By skilled person	622.2
- Frequency of	622.1
- Monitoring	622.2
- Notice on	514.12.1
- Recommendation for	135.1
- Requirements	621.1
Periodic Inspection Report see *Electrical Installation Condition Report*	
Persons see *Authorised, Skilled, Instructed, Ordinary persons*	
Phase conductor see *Line conductor*	
Phase, loss of see *Line, loss of*	
Phase sequence, verification	612.12
Photovoltaic see *Solar photovoltaic*	
Pipes	
- Earth electrodes formed by	542.2.3L(i), 542.2.6
- Gas see *Gas pipes*	
- Oil see *Oil pipes*	
- Water see *Water pipes*	
Placing out of reach, protection by	
- Application of	417.1L
- Arm's reach	417.3L
- Bare live parts	417.3.1
- Overhead lines	417.3L
- With obstacles	417.3.2
Plugs, definition	Part 2
Plugs	
- Clock	553.1.5(i)
- Emergency switching by, prohibited	537.4.2.8
- Functional extra-low voltage systems	411.7.5
- Functional switching by	Table 53.4L
- Fused, selection of	553.1.3
- High protective conductor current equipment	543.7.1.201L
- Instantaneous water heaters not to be supplied by	554.3
- Isolators/tion	Table 53.4L
- Mechanical maintenance, for switching off for	537.3.2.6
- Reduced low voltage circuits	411.8
- Selection and erection of	553.1
- SELV or PELV circuits	414.4.3, Table 55.1L
- Shavers	553.1.5(ii)
- Special circuits	553.1.5(iii)
PMEs see *Protective multiple earthing*	

COPYRIGHT

Point (in wiring), definition	Part 2
Polarity, test of	612.6L
Poles, concrete, exemption from fault protection	410.3.9(ii)
Polluting substances, wiring systems exposed to	522.5.1
Potentially explosive atmospheres, installations in	
- Equipment/Apparatus	110.1.3L, 612.1, 131.1
Potentiometer, not as FELV source	411.7.4L
Power demand, suitability of equipment for	133.2.4, 512.1.4
Power factor	331.1L(xii)
Prefabricated wiring system	
- Definition	Part 2
- In fixed installation	521.201
Prospective fault current	
- Definition	Part 2
- Determination of	434.1, 612.11
- For residual current devices	531.2.8, Table 41.1
- Measurement of	612.11
- Suitability of protective devices	434.5.1,133.2.2, 432.1 to 3
Protection against electric shock	
- Protective measures	Chapter 41
Protection against fire	Sections 421, 422, 527 & 532
Protection against overcurrent	131.4
Protection against over voltages	Section 433
Protection against thermal effects	131.3
Protection against undervoltage	Section 535
Protection for safety	Part 4
Protective bonding conductor, definition	Part 2
Protective bonding conductors	Section 544
Protective conductor, definition	Part 2
Protective conductor current	
- Assessment of effects of	331.1L(viii)
- Definition	Part 2
- Equipment with high	543.7
- High, information to be provided	543.7.1.205
- HV electrode water heaters and boilers	554.1.4
- Requirements for equipment producing	543.7
- Residual current devices and	531.2.4
- Suitability of earthing arrangements for	542.1.3.1(ii)
Protective conductors	
- Accessibility of connections	543.3.2
- Agricultural premises	705.54
- Between separate installations	542.1.3.3
- Bonding, selection and errection of	Section 544
- Colour identification of	514.5.2
- Continuity of	543.2.7, 543.2.9
- Cross-sectional areas	554.1.1L
- Electrically separated circuits	413.3.2 & 3
- Exposed-conductive-parts used as	543.3.5
- Generating sets, portable	551.4.4.1
- High currents in	543.7
- Inspection of	611.3
- Insulation of	543.3.201
- Non-conducting location, prohibited in	418.1.3
- Preservation of continuity	543.3
- PV power supply systems	712.54
- Residual current device, to be outside magnetic circuit of	531.2.2

COPYRIGHT

- Ring final circuit — 543.2.9
- Selection and erection of — Section 544
- Separate — 543.2.7
- Street electrical fixture — 714.411.203
- Swimming pools — 702.410.3.4.1
- Switching prohibited in — 543.2.4
- 10 mm^2 or less to be copper — 612.2.1 & 2
- Testing of — 543.2
- Types of, description — 132.14

Protective devices and switches, position of — 559.5.01.208
Protective devices and switches, identification of — 514.3
Protective earthing see *Earthing,* definition — Part 2
Protective equipotential bonding see *Equipotential bonding,* definition — Part 2
Protective extra-low voltage (PELV), definition — Part 2
Protective measures, shock
- Earth-free local equipotential bonding — 410.3.6(ii)
- Electrical separation for supply to more than one item of current-using equipment — 410.3.6(iii), 418.3
- For general application — 410.3.3
- Non-conducting location — 410.3.6(i), 418.1
- Obstacles — 410.3.5, 417.2
- Placing out of reach — 410.3.5, 417.3L

Protective multiple earthing (PME)
- Definition — Part 2
- Main bonding connections for — 544.1.1

Protective separation, definition — Part 2
Public premises — 110.2L(i)
PV and generic terms and definitions — Part 2
PV solar photovoltaic see *Solar photovoltaic (PV) power supply systems* — Section 712L

Q

Quarry installations — 110.1.3(viii)

R

Radial final circuits, arrangements for household and similar premises — Appendix 15(L)
Radiation, solar, etc, wiring systems to be suitable or shielded — 522.11.1
Rating factors for cables — Appendix 4(L) Sec 6.5.1
Reduced low voltage system
- Application — 411.8
- Definition — Part 2

Reinforced insulation, definition — Part 2
Reinforced insulation, of equipment — 412.2.1
Reliability of equipment for intended life — 341.1(iii)
Reliable design — 311.1
Remote devices for isolation — 537.2.1.5
Remote switching for mechanical maintenance — 537.3.1.2
Reporting, Certification and — Chapter 63
Reporting, definition — Part 2
Residual current, definition — Part 2
Residual current device, definition — Part 2
Residual current devices (RCDs)

COPYRIGHT

- Additional protection by 411.3.3
- Agricultural premises 705.415.2.1L
- Auto-reclosing 530.3.5L
- Auxiliary supply for 531.2.6
- Bathroom 701.411.3.3
- Cables in walls or partitions protection by 522.6.202
- Conducting locations 706.410.3.10L(iii)(b)
- Conductors to be disconnected by 531.2.1
- Discrimination between 531.2.9
- Earth fault loop impedance for 411.5.3
- Fault current withstand capability of 531.2.8
- Fire risk, protection against Section 532
- Fountains, zones of 702.410.3.4.2
- HV electrode water heaters and boilers 554.1.4
- High protective conductor current circuits 531.2.4
- Isolation, suitability for Table 53.4L
- Magnetic circuit of 531.2.2
- Magnetic fields of other equipment 531.2.7
- Operating current see *Residual operating current*
- Precautions to be taken, where ordinary person may operate device 531.2.10
- Preferred, for shock protection in TT systems 411.5.2
- Protection by, not recognised as sole means 415.1.2
- Protection against fault current, in series 531.2.9
- Protection against risk of fire Section 532
- Protective conductor still required 531.2.5
- Reduced low voltage circuits with 411.8.3
- Required, for certain socket-outlets 411.3.3(i)
- Required, for mobile equipment outdoors 411.3.3(ii)
- Saunas 703.411.3.3
- Selection and erection of 531.2 to 5
- Selectivity between 536.3
- Shock protection by
    - Earth fault loop impedance Table 41.5
    - In IT system 411.6.3
    - In TN system 411.4.4 & 5
    - In TT system 411.5.2 & 3
- Solar photovoltaic (PV) supply systems 712.411.3.2.1.2
- Special locations Part 7
- Street furniture 702.410.3.4.1
- Testing 314.1L(iv), 531.2.4

Residual operating current
- Additional protection 415.1.1, 701.411.3.3
- Agricultural premises, for protection against fire 705.422.7
- Definition Part 2
- Earth fault loop impedance in relation to 411.4.4 & 5
- Selection of protective device 531.2.3

Resistance area (of an earth electrode), definition Part 2

Resistance
- Of circuit conductors, increase with temperature Appendix 14(L)
- Of insulating floors and walls 418.1.5

Restricted access, obstacles and placing out of reach permitted 417.3L

Residual current monitor (RCM)
- Application 411.1 Note
- Not a protective device Appendix 15(L)

Rewirable fuses see *Fuses, semi-enclosed*

Ring final circuit
- Arrangements for household and similar premises 433.1.203

COPYRIGHT

- Circuit protective conductor of 543.2.9
- Definition Part 2
- For high protective conductor current equipment 543.7.1
- Overload protection of 433.1.204L
- Test of continuity 543.7.2.201

Risk assessment
- Documented, where RCD protection of socket-outlets not provided 433.4
- Unearthed auxiliary circuit 612.2.2

Rotating machines see also *Machines: Motors*
- Emergency switching for 557.3.4.3
- Exciter circuits of 537.4.1
- Selection and erection of 551.2

S

Safety lighting, medical locations A.560.9.1
Safety, object of the Code Chapter 12
Safety service, definition Part 2
Safety services Chapters 35 & 56
- Application, scope of 560.1
- Automatic supply, availability of 560.4.1
- Characteristics of sources of supply 313.2L
- Circuits
  - Determination of 560.7.1
  - Fire-resistance 560.7.2
  - Independence of 560.7.6
  - Lifts 560.7.8
  - Segregation 528.1 Note 2
- Classification of supplies for 560.4.1
- Controlgear, location of 560.7.5
- Drawings of installations 560.7.10
- Equipment, fire protection 560.5.2(ii)
- Examples of 560.1 Note
- Omission of overload protection 560.7.3
- Operating instructions for 560.7.12
- Preferred protective measures for 560.5.3
- Required to operate in fire conditions 560.5.2
- Scope of application 560.1
- Sources
  - Accessible to skilled or instructed persons only 560.6.3
  - As fixed equipment 560.6.2
  - Batteries 560.6.10
  - Central power supply 560.6.10
  - Characteristics 313.2
  - Classification of 560.4
  - Generating set see also *Generating sets* 560.6.13

Safety signs see *Notices – Warning*
Safety sources for SELV and PELV 414.3
Sauna, definition Part 2
- Additional protection by RCDs 703.411.3.3
- Equipment, selection and erection 703.51
- Heating appliances 703.55
- Lighting controls 703.53
- Scope of application 703.1
- SELV or PELV 703.414.4.5
- Shock protection in 703.41

COPYRIGHT

- Switchgear, location of 703.537.5
- Wiring systems for 703.52
- Zones 703.52

Schedule see *Diagrams*
Schedule of test results 514.9.1L
Scope of the Code Chapter 11
Screen materials, for fixed equipment 421.1.2(ii), 421.1.3(ii)
Screws, insulating, in Class II enclosures 412.2.2.2(ii)
Seals, suitable presence of 611.3(vii)
Segregation see also *Mutual detrimental influence*
- Circuits 528.1 Note 2
- Different currents and voltages 515.2
- Non-electrical services 528.3

Selection and erection of equipment Part 5
Selectivity see *Co-ordination*
SELV see *Separated extra-low voltage definition*
Semiconductor devices
- Isolation, not to be used for 537.2.2.1
- Not as FELV source 411.7.4

Semi-enclosed fuses see *Fuses*
Separated extra-low voltage (SELV), definition Part 2
Separated extra-low voltage systems
- Agricultural premises 705.414.4.5
- Basic protection 410.3.3(iv), 414.1
- Bathrooms 701.414.4.5, 701.5
- Circuits, requirements for 414.4
- Conducting locations with restricted movement 706.410.3.10
- Equipment, protective separation of 414.4.1 Note 1
- Exposed-conductive-parts of 414.4.4
- Lighting installations, extra-low voltage 715.414
- Live parts of 414.4.1
- Mobile sources for 414.3
- Nominal voltage 414.2(i), 414.4.5
- Plugs and socket-outlets for 414.4.3, 553.1.1 & 2
- Protection by use of 414.2
- Saunas 703.414.4.5
- Separation from other circuits 414.4.2
- Sources for 414.3
- Swimming pools 702.410.3.4
- Separation, electrical, as protection against shock see *Electrical separation* 413.1.1
- Separation, simple see *Simple separation*
- Service, continuity of

Services, Safety see *Safety services*
Shaver supply units in bathrooms 553.1.5L(ii)
Shavers, plugs and socket-outlets for 553.1.5L(ii)
Ships, electrical equipment on board, the Code not applicable to 110.2L
Shock current, definition Part 2
Shock, electric, definition Part 2
Shock, electric, protection against see *Basic protection; Fault protection; Protection against electric shock*
Short-circuit current see also *Fault current,* definition Part 2
Short-circuit current, prospective, determination at origin of installation 313.2L, 132.3L(iii)
Shower rooms see *Bathrooms*
Signalling circuits see *Voltage Band I,* definition Part 2
Signs, electric see *Discharge lighting*
Signs, warning see *Notices – Warning*

COPYRIGHT

Simple separation
- Conducting locations, in — 706.413.1.2
- Definition — Part 2
- Electrical separation, protection by — 413.3.2
- FELV, source for — 411.7.4L
- PV power systems — 712.312, 712.411.3.2.1.2L

Simultaneously accessible parts
- Additional protection by bonding — 415.2.1 & 2
- Definition — Part 2
- Earth-free local bonding locations — 418.2.2
- In IT system, precautions — 411.6.1
- Live, warning of voltage between — 514.10.1
- Non-conducting locations — 418.1.4
- Placing out of reach — 417.3.1
- Supplementary bonding between, protection by — 415.2.1 & 2
- With automatic disconnection — 411.3.1.1

Single fault in IT system see *IT system, first fault in*
Single insulated cables see *Non-sheathed cables*
Single-phase circuit, cross-sectional area of neutral in — 524.2.1(i)
Skilled person (electrically), definition — Part 2
Skilled persons
- And safety services sources — 560.6.3
- Control of safety services by — 560.7.5
- Good workmanship by — 134.1.1
- Obstacles permissible where access restricted to — 410.3.5
- Placing out of reach permissible where access restricted to — 410.3.5
- Stationary batteries, access to — 551.8.1

Socket-outlet, definition — Part 2
Socket-outlets
- Additional protection for — 411.3.3L
- Agricultural and horticultural premises — 705.553.1
- Bonding to boxes, etc — 543.7.1.204L
- Circuits for
  - Disconnection times — 411.4.5L, 411.5.3L
  - Earth fault loop impedances for — 553.1.3L
- Clocks, for — 553.1.5L
- Emergency switching by, prohibited — 553.1.5L
- Functional extra-low voltage systems — 411.7.5
- Functional switching, for — 537.5.2.4L
- Height of — 553.1.6L
- High protective conductor current equipment — 543.7.1.201L
- Household installations, selection — 543.7.2.201
- Isolation, for — 553.1.201L
- Lighting points, at fixed — 559.5.1
- Mechanical maintenance, switching off for — 559.5.1(v)
- Outdoor equipment, for — 537.3.2.6
- PELV systems — 411.3.3(ii)
- Prohibited — 414.4.3
  - 'Class II' circuits or installations — 412.2.3.2L
  - Emergency switching — 537.4.2.8
  - Instantaneous water heaters — 554.3.1L
  - Sauna heater location — 703.537.5
- Provision of — 553.1.7L
- Reduced low voltage circuits — 411.8.5
- Selection and erection of — 553.1L
- SELV systems — 553.1.1L & 2L
- Separated circuits — 418.3.5

COPYRIGHT

- Shavers, for 553.1.5L(ii)
- Swimming pools 702.410.3.4.1
- Voltage drop at 525.202

Soil thermal resistivity 523.3
Solar gain see *Solar radiation*
Solar photovoltaic (PV) power supply systems
- Accessibility for work on equipment 712.513.1
- Definitions associated with Part 2
- Earthing of d.c. live conductor 712.54
- External influences, expected 712.512
- Isolation 712.53
- Lightning induced voltages, minimisation of 712.444.4.4
- Maintenance, access for 712.513.1
- Protective bonding 712.54
- Requirements, scope of 712.1
- Safety, protection for 712.511
- Selection and erection
  - Equipment 522.11, 712.4
  - Wiring systems 712.5
- Warning label, live parts 712.522

Solar radiation
- PV power supplies 712.537.2.2.5.1
- Rating factors, cable, don't take account of Appendix 4(L) Sec 6.5.1
- Wiring system to be suitable for or protected against 522.11.1

Soldered connections 526.2L, 526.9
Space heating appliances 703.55, 522.2.1
Special locations 410.3.2L, 415.2, 559.1
Specifications see *Standards*
Spotlight 422.3.1, 422.4.2, 556.4.1(iii)
Spur, definition Part 2
Standby supplies 313.2L
Standby systems, use of safety service supply for 560.6.7
Starters, motor see *Motors*
Starting currents
- Assessment of effects of 331.1L(v)
- Suitability of equipment for 557.3.5.1

Static convertors 551.4.3.3
Stationary equipment, definition Part 2
Steel
- Reinforced concrete poles, exemption from fault protection 410.3.9(ii)
- Reinforcement of concrete, use as earth electrode 542.2.3L(v)
- Structural metalwork, bonding of 542.2.3L(iv)

Storage batteries; safety services 351.1(i)
Street furniture Highway power supplies
- Definition Part 2
- All live parts of electrical equipment shall be protected by insulation or by barriers or enclosures 714.411.2.201
- Extraneous-conductive-parts 411.3.1.2L
- Isolation and switching, devices for 714.537

Stroboscopic effect, may be avoided by 559.9
Structural metalwork, bonding of 542.2.3L
Sunlight see *Solar radiation*
Supplementary bonding conductors, selection and erection of 705.544.2, 705.51

Supplementary equipotential bonding
- Additional protection by 415.2
- Agricultural and horticultural premises 705.415.2.1L
- Bathrooms and shower rooms 701.415.2

COPYRIGHT

- Conducting locations, restricted movement — Section 706
- Conductors, continuity of, testing — 612.2.1
- Conductors, selection and sizing — 701.415.2
- Disconnection time, cannot be achieved — 411.3.2.6L
- Extraneous-conductive-part used as conductor for — 418.2.2, 702.415.2
- Inspection — 611.3(c)(i)
- Livestock, locations for — 705.415.2.1L
- Swimming pools — 702.415.2
- Where static convertor installed — 551.4.3.3.1

Supplementary insulation, applied during erection — 412.2.1.2
Supplementary insulation, definition — Part 2
Supplier see *Distributor*
Supplies
- Alternative supplies, warning notice — 514.15
- Conducting locations, restricted movement — Section 706
- Electrically separated — 413.3.2L(iv)
- Functional extra-low voltage systems — 411.8.4.1L
- Highway power — 313.2L
- Reduced low voltage systems — 411.8
- Safety services — 313.2L
- SELV and PELV — 414.4
- Standby, assessment — 313.2L

Supply, installation earthing arrangements — 542.1.3L
Supply, nature of, assessments — 313.1L(ii)
Supply systems, public
- Effect of installation equipment on — 422.6L
- Switching arrangements for safety supplies — 712.55.2L

Supports for cables for fixed wiring — 522.8.4 & 5
Surge current, definition — Part 2
Surge protection, overvoltage — 534.2
Surge protective device (SPD), definition — Part 2
Swimming pools
- Equipment enclosures, protection afforded by — 702.512.2
- Equipment, current-using — 702.55.1
- Fixed equipment in zone 1 — 702.55.4
- Lighting in zone 1 — 702.55.4
- Protective measures, application of — 702.410.3.4
- Scope — 702.11
- SELV circuits — 702.414.4.5
- SELV supplies — 702.410.3.4
- Socket-outlets
  - Location of — 702.53
  - Type preferred if in zone 1 — 702.53
- Supplementary equipotential bonding required — 702.415.2
- Switchgear and controlgear, location of — 702.53L
- Underwater luminaires — 702.55.2
- Wiring systems — 702.52
- Zones — 702.32

Switch, definition — Part 2
Switch, linked
- Definition — Part 2
- Inserted in an earthed neutral conductor — 132.14.2
- Main — 537.1.4
- More than one source — 537.1.5
- Selection of type; multiphase circuits — 530.3.1
- Step-up transformers — 555.1.3

Switch, main, for installation — 537.1.4
Switchboard, definition — Part 2

COPYRIGHT

Switchboards
- Conductors or between conductors — 526.4
- Segregation within — 515.2

Switches
- Bathrooms; erection of switchgear — 701.512.3
- Firefighter's — 537.6
- Linked see *Switch, linked* — 537.1.4
- Main switch for installation — 537.1.5 & 6
- More than one source — 537.1.5
- Position of, fundamental principle — 132.14
- Prohibited in protective conductors — 543.3.3
- Single-pole, prohibited in neutral — 132.14.2, 530.3.2L
- Step-up transformers, for — 555.1.3

Switchgear
- Assemblies, functional test — 612.13.2
- Definition — Part 2
- Diagram for — 514.9.1(iii)
- Different voltages, warning — 514.10.1
- For isolation and switching — Section 537
- For safety services — 560.7.5
- Labelling of — 514.1.1
- Marking of — 537.3.2.4
- Selection and erection of — Chapter 53
- Single-pole, prohibited in neutral — 132.14.1

Switching
- Current-using equipment — 537.5.1.3
- Devices, co-ordination with overcurrent protection — 536.5
- Devices, selection and erection of — 537.1
- Electrode water heaters and boilers — 554.1.2
- Emergency — 537.4
- Functional — 537.5
- Fundamental principles for — 132.14
- Highway power supplies; outdoor lightings — 714.537.2.1.201
- Main switch for installation — 537.1.4 to 6
- Mechanical maintenance, for — 537.3
- Of circuits — 537.5.1.1
- Overvoltage due to, protection against — 543.3.3
- Remote, for mechanical maintenance — 537.3.1.2
- Single-pole, prohibited in neutral — 132.14.1, 530.3.2L
- Step-up transformers — 555.1.3

Symbols
- For diagrams — 514.9.1
- Luminaires — Table 55.3

System
- Definition — Part 2
- Types of, earthing — 312.2L

T

Telecommunication cables, bonding of metallic sheath of — 411.3.1.2L

Telecommunication circuits definition of Voltage Band I — Part 2
- Applicability of the Code to — 110.1.3(vi)
- Interference, prevention of electrical segregation from other circuits — 528.2 Note 1
- Segregation from other circuits — 528.2 Note 2

COPYRIGHT

Temperature
- Ambient
  - Buried cables — 433.1.203
  - Busbar trunking systems — Appendix 8(L) Sec 2
  - Cables and conductors — 522.1
  - Definition — Part 2
- Limiting devices, heaters for liquids — 554.2.1
- Limits
  - Conductor operating — 523.1
  - Connections between conductors and equipment; Current — 512.1.2
  - Current-carrying capacity — Section 523
  - Enclosures constructed during erection — 421.1.6
  - Fault current protection — 434.5.2L
  - Floor-heating; Electrical connections — 526.3L(iii)
  - Overcurrent protection — 430.3
  - Precautions, where particular risk of fire — Section 422
  - Protection against burns — Section 423
  - Protective conductors — 543.1.3
  - Wiring systems — 522.1
- Marking, luminaires — 559.5.3.2
- Rating of lampholders — 553.3L, 559.5.1.205
- Rise in circuit conductors, effect on resistance — Appendix 14(L)
- Saunas — 703.512.2
- Surface, of equipment — 421.1.2, 422.1.2

Temporary
- Festoon lighting, excluded — 714.1(ii) & (iv)
- Overvoltages, protection of low voltage installations against — Section 740L
- Sealing arrangements, fire barriers — 527.2.1.1
- Structure, definition — Part 2
- Supply unit
  - Definition — Part 2
  - Labels — 416.2.5

Temporary electrical installation, definition — Part 2
Temporary electrical installations — 714.514.12.201
Temporary overvoltage, definition — Part 2
Termination of cables, conductors, etc. — Section 526
Terms, earthing and protective conductor, illustration of — Figure 2.1
Testing
- Accessibility of equipment for — 132.12(ii)
- Additions and alterations to installations — 610.4
- Assemblies — 612.13.2
- Automatic disconnection of supply — 612.8.1
- Barriers provided during erection — 612.4.5
- Competency — 134.2.1, 610.5, 621.5 & 631.4
- Continuity of protective conductors — 612.2.1
- Continuity of ring final circuit conductors — 612.2.2
- Definition — Part 2
- Earth electrode resistance — 612.7
- Earth fault loop impedance — 612.9L
- Electrical separation — 612.4.3
- Enclosures provided during erection — 612.4.5
- FELV — 612.4.4
- Functional — 612.13, Appendix 13
- Insulation
  - Non-conducting locations — 612.3, 612.5, Appendix 13
  - Resistance — 418.1, 612.4

COPYRIGHT

- SELV and PELV — Chapter 62

- Periodic
  - Alternative arrangements — 622.2
  - Assessment for maintainability — Section 341
  - Competent person, by — 621.5
  - Frequency of — 622.1
  - Notices on — 514.12.1L
  - Recommendation for, fundamental principle — 135.1
  - Requirement for — 621.1
- Polarity — 612.6L
- Prospective fault current — 612.11
- Protective conductors, continuity — 612.2.1
- Repeat, after rectification of fault — 612.1
- Residual current devices — 612.8.1, 612.10, 612.13.1
- Ring final circuit continuity — 612.2.2
- Test certificates — Chapter 63

Thermal effects of fault current — 434.5.2L

Thermal effects, protection against
- Burns — 131.3.1, Section 423
- Fire caused by equipment — Section 421
- Fire, where particular risks of
  - Equipment requirements — 422.1
  - Escape routes — 422.2
  - Evacuation in emergency — 422.2
- Location
  - Constructed of combustible materials — 422.4
  - Of public significance — 422.6
  - With fire risks due to processed or stored materials — 422.3

Thermal insulation, cables in — 523.9L

Thermal resistance of soil — 523.3

Thermal stresses on earthing arrangements — 542.1.3.1(ii)

Time/current characteristics, overcurrent devices — 432.4L

Time delay
- Electrode water heater or boiler protection — 554.1.4
- For safety services and supplies — 313.2L, 560.4
- For undervoltage protective devices — 535

Times, disconnection see *Disconnection times*

TN-S system
- Connection of installation to earth — 312.2.1L, 542.1.2.1
- Definition — Part 2
- Explanatory notes on — Figure 3.8
- Isolation and switching of neutral — 537.1.2

Tool or Key
- Adjustment of overcurrent settings — 533.1.2
- Adjustment of RCDs — 531.2.10
- Disconnection of main earthing conductor — 542.4.2
- Fountains, mechanical protection, removal of — 702.55.3
- Insulating barrier, removal of — 412.2.2.3
- Intermediate barrier, removal of — 416.2.4(iii)
- Opening enclosures — 416.2.4(i)
- Outdoor luminaires — 714.411.2.201
- Street furniture, access to live parts in — 714.411.2.201
- Total insulation of equipment — 412.2.1.1(ii)

Transformers
- Auto, not for FELV — 411.7.4
- Current, omission of overload protection — 433.3.3(iii)
- For electrical separation — 413.1.1(ii)
- For FELV system — 411.7.4

COPYRIGHT

- Of residual current devices — 531.2.2
- Reduced low voltage circuits — 411.8.4
- Safety isolating, for SELV and PELV systems — 414.3(i)
- Selection and erection of — Section 555

Transient overvoltages — 331.1L(i), 443.1.1
Triplen harmonics, definition see also *Harmonic currents*
Trunking (for cables), definition — Part 2
Trunking systems

- Cables and conductors in — Section 521
- Fixed installation — 522.6.2
- Exposed to water or high humidity — 522.3
- Fire barrier in — 527.2.2 & 3
- Flame propagation requirements — 527.1.5
- Fire sealing at floors, etc — 527.2.1
- Partitions in — 528.1
- Protective conductors formed by — 543.2
- Selection of — 521.6

Types of system earthing — 312.2
Type-tested equipment, Class II — 412.2.1.1

U

Ultraviolet radiation, wiring systems and — 522.11
Underground cables *see also Buried*

- Current carrying capacity — 433.1.203, 523.3 & Appendix 4(L)
- Depth, agricultural, livestock installations — 705.522
- Depth, general — 522.8.10
- Installation methods — Appendix 4(L)
- Marking of — 522.8.10
- Rating factors for — Appendix 4(L)
- Soil thermal resistivity — Apprndix 4(L) Sec 2.2
- Type, protection and identification — 522.8.10

Undervoltage, assessment of — 331.1L(ii)
Undervoltage, protection against — Section 535, 132.8
Underwater luminaires, swimming pools — 702.55.2
Uninterruptible power supplies (UPS) — 560.6.12
Unwanted tripping of RCDs — 314.1(iv), 531.2.4

V

Values of k — Table 43.1, Tables 54.2 to 6
Variation of installation conditions along route — 523.8
Varnish, generally not as insulation — 416.1
Ventilation

- Livestock, life support — 705.560.6
- System, forced — 422.5

Verification, definition — Part 2
Verification, initial — 134.2

- Examples of items requiring inspection, lists of — Sections 134, 610 & 631
- Schedule for domestic and similar — Sections 135 & 631

Vermin or rodents wiring system exposed to — 705.522.10
Vibration

COPYRIGHT

- Wiring systems subject to Voltage — 522.7
- Bands, definitions — Part 2
- Drop
  - Busbar trunking systems — Appendix 8(L)
  - Extra-low voltage lighting — 715.525
  - Limits — Section 525
  - Powertrack systems — Appendix 8(L)
  - Tabulated values, for cables — Appendix 4(L)
- Exceeding low voltage, applicability of the Code to — 110.1.2(ii)
- Extra-low definition — Part 2
- For testing — Section 612
- High see *High voltage*
- Limit
  - Separated circuits — 413.3.2
- Low
  - Definition — Part 2
  - Reduced — 411.8
- Nominal
  - Assessment of — 313.1(i)
  - Definition — Part 2
  - Exceeding 230 V to earth, warning of — 514.10.1
  - Ranges covered by the Code — 110.1.2(i) & (ii)
  - Reduced low voltage circuits — 411.8.1.2
  - SELV and PELV — 414.2L(i), 414.4.5
  - Suitability of equipment for — 512.1.1
- Reduced, definition — Part 2
- Segregation of different voltages within assemblies — 515.2
- Tolerances see *Definition of Voltage, nominal, note* — Part 2

W

Walls
- Cables concealed in — 522.6.202 to 204
- Fire-resistant, cables passing through — 422.4.1
- Insulating, resistance of — 418.1.5
- Socket-outlets on, mounting height — 553.1.6
- Thermally insulating, cables in — 523.9L

Warning notices see *Notices – Warning*
Water
- Appliances producing hot — 424.1
- Heaters
  - And boilers, electrode type — 554.1
  - Having immersed heating elements — 554.1.2
  - Shower — 701.55L(x)
- Pipes
  - Bonded metal, for instantaneous water heaters — 554.3
  - Main bonding of installation — 411.3.1.2L, 544.1.2
  - Public, prohibited as earth electrodes — 542.2.6
  - Wiring system in proximity to — 528.3
- Service, main bonding to — 544.1.2
- Wiring systems exposed to — 522.3

Weight see *Mass*
Wiring materials, selection and erection of — Section 521
Wiring system, definition — Part 2
Wiring systems
- Agricultural premises — 705.52

COPYRIGHT

- Ambient temperature 522.1
- Buried in floor 522.8.7
- Condensation in 522.3.2
- Corrosive or polluting substances, exposed to 522.5
- Damage by fauna 522.10
- Damage by flora or mould 522.9
- Erection of 522.8.1
- Escape routes in buildings 422.2.1
- Fountains, additional requirements 702.522.23
- Installation methods 521.1 to 3
- Maintainability Section 529
- Mechanical stresses 522.6 to 8, 522.15
- Metalwork of, as protective conductor 543.2.1L(v)
- Penetration of load-bearing element 522.8.14
- Presence of dust 522.4.2
- Safety services 560.8
- Saunas 703.52
- Sealing of penetrations 527.2
- Selection and erection Chapter 52
- Solar, etc: radiation, precautions against 522.11
- Swimming pools 702.52
- Vibration 522.7
- Water in 522.3

X

X-ray units, RCD protection in Group 2 medical locations A.411.3.2.5, A.411.4, A.531.2

Y

No entries

Z

Zones

- Bathrooms, showers 701.32.1, Figures 701.1 & 701.2
- Cables in walls and partitions 522.6.202
- Fountains 702.32, Figure 702.4
- Saunas 703.32, Figure 703

Swimming pools 702.32, Figures 702.1 to 3

COPYRIGHT

ABOUT ENTERPRISE SINGAPORE

Enterprise Singapore grows stronger enterprises by transforming industries, building new capabilities, and providing Singapore companies access to global opportunities.

We also establish Singapore as a leading global trading hub, and strengthen quality and trust in Singapore's enterprises, products and services.

Through this, we aim to create good jobs for our people and sustainable growth for our economy.

For more information, please visit ESG Website: http://www.enterprisesg.gov.sg.

ABOUT THE SINGAPORE STANDARDISATION PROGRAMME

Enterprise Singapore is the national standards body in Singapore and we administer the Singapore Standardisation Programme. We are vested with the authority to appoint an industry-led Singapore Standards Council to approve the establishment, review and withdrawal of Singapore Standards (SSs) and Technical References (TRs). The Standards Council also advises Enterprise Singapore on the policies, strategies, initiatives and procedures for standards development and promotion.

Enterprise Singapore and the Standards Council collaborate with key stakeholders from industry and government agencies to identify and develop new standards as well as review existing standards to enhance the competitiveness of enterprises and support social, safety, health and environment initiatives in Singapore.

SSs and TRs are in the form of specifications for materials, products, services and systems, codes of practice, requirements for interoperability, methods of test, management systems, guidelines, nomenclatures, etc.

TRs are pre-SSs developed to address urgent industry demand and are issued for industry trials for a period of time. Comments received during this trial period are considered when a TR is reviewed. TRs can become SS after the trial period, continue as TRs for further industry trials or be withdrawn.

To ensure adequate viewpoints are considered in the development and review of SSs and TRs, committees and working groups set up by the Standards Council consist of representatives from various key stakeholders which include industry associations, professional bodies, academia, government agencies and companies. SSs are also put up for public comment before publication.

In the international and regional fora, Enterprise Singapore represents Singapore in the International Organization for Standardization (ISO), the Asia-Pacific Economic Co-operation (APEC) Sub-committee for Standards and Conformance (SCSC), the Pacific Area Standards Congress (PASC) and in the ASEAN Consultative Committee on Standards and Quality (ACCSQ). The Singapore National Committee of the International Electrotechnical Commission (IEC), which is supported by Enterprise Singapore, represents Singapore in the IEC.

COPYRIGHT

Toppan S$ 157.72

SS 638 : 2018
(incl 7% GST)

The Singapore Standardisation Programme
is managed by Enterprise Singapore

www.enterprisesg.gov.sg

