

ABB transformers
Meeting energy demand while lowering environmental impact

Power and productivity
for a better world™

Power and productivity for a better world

As one of the world's leading engineering companies, we help our customers to use electrical power more effectively, to increase their industrial productivity, to cut their energy consumption and achieve sustained reductions in their environmental impact.



ABB is a leader in power and automation technologies. With about 120,000 employees worldwide, we are close to customers in around 100 countries. We strive on solutions that improve our customers' operating performance and productivity; whilst saving energy and lowering environmental impact.

We are one of the world's leading manufacturer of power and distribution transformers. We offer a full range of transformers for ANSI, IEC and other local standards, designed to enhance the reliability, durability and efficiency required in utility, industrial and commercial applications.

With focus factories around the world, ABB serves the world market demand according to specific customer needs. In Singapore, we manufacture liquid filled distribution transformers up to 10 megavolt amperes (MVA) with system voltage up to 36 kilovolts (KV). Our design ranges from mineral or silicone liquid filled transformers, nitrogen cushion transformers, radiator transformers, transformers with conservator and ACS 1000 converter system.



Technology, innovation and unsurpassed quality

ABB built one of its first power transformers in 1893 and has since continuously invested in research & development (R&D), to be in the forefront of innovation and technology.

In 2008, ABB achieved a breakthrough in the development of ultra-low-noise power transformers to meet the noise regulations of New York City.

Impeccable service

We believe that the customer is always the first priority. Through the analysis of individual customer requirements, we assure that the customer will receive the optimum transformer with the highest quality promptly.

Innovative solutions

Being part of a wider network, we have access to resources, technical experience and expertise within the ABB Group. We believe in continual R&D which provides us with a unique opportunity to present our customers with innovative solutions to meet tomorrow's challenges.

Unsurpassed quality

Our transformers undergo stringent checks and controls to ensure quality. A system of excellence - from when design work commences to manufacturing and delivery - is in place to ensure that all transformers meet the customers' requirements and are of top-notch quality.



Design features

ABB believes that every step of the production process is instrumental in manufacturing the optimum transformer to fit the individual needs of our customers. We practise just-in-time manufacturing and are constantly striving to improve the lead time of our transformers.

Core

Core design plays a crucial part in the efficiency of a transformer. The geometric core arrangement and the materials chosen determine the losses and the noise levels. Grain oriented transformer sheet steel is cut by the most modern machinery and assembled into limbs and yoke sets to form the core. The joints between the leg and yoke are mitered at 45° and interleaved.





Windings

The windings of the transformers are made of high grade electrolytic copper or aluminium. The high voltage (HV) windings are wound with either round double enamel insulated or rectangular paper insulated wire. The low voltage (LV) windings are wound with rectangular paper insulated wire, enamelled wire or foil. They are designed to meet the customer's insulation level requirements and withstand the short circuit forces as outlined in IEC 60076-5. The neutral points of the LV windings are brought to the tank cover.

Off-circuit tap changer

The tapping of the HV winding are connected to the off-circuit tap changer located horizontally between the yoke and the tank cover. The handle is located on the cover and should only be operated when the transformer is de-energised. The design prevents setting the off-circuit tap changer to intermediate position.

Tank and cover

The tank walls are made of corrugated cooling surfaces and the cover is welded to the tank frame. Transformers up to 5 MVA are usually supplied with corrugated cooling fins. Alternatively, the transformer tank may also be rigid type provided with radiator.

Painting and surface treatment

All the metal parts are carefully sand-blasted. The initial protective coating is made of a single coat of one pack epoxy paint. The final paint is powder-coated to at least 100 µm. All units are painted in RAL 7033 but other colours are available on request.

Technical specifications

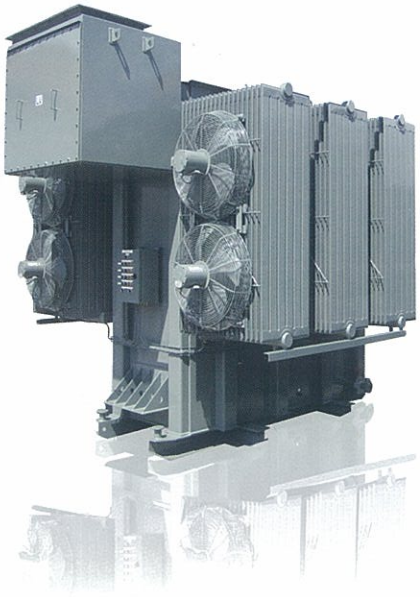





Capacity (KVA)	Rated Voltage (KV)	Z (%)	Approx Dimension (mm)			Approx Mass (Kg)		Liquid Type	Temp Rise
			L	W	H	Oil (l)	Total		
1000	22/0.433	5	2075	2450	2000	850	3700	Mineral	50/55
	22/0.433	5	2080	2450	2100	900	3800	Silicone	50/55
1500	22/0.433	6	2100	2450	2300	1100	5000	Mineral	50/55
	22/0.433	6	2200	2500	2300	1200	5100	Silicone	50/55
2000	22/0.433	6	2200	2500	2400	1200	5500	Mineral	50/55
	22/0.433	6	2300	2550	2400	1500	6400	Silicone	50/55
2500	22/0.433	6	2350	2700	2400	1500	7000	Mineral	50/55
	22/0.433	6	2400	2700	2700	2200	7800	Silicone	50/55
3000	22/0.433	6	2400	2800	2500	1600	8000	Mineral	50/55
	22/0.433	6	2400	2800	2500	2250	8400	Silicone	50/55
4000	22/0.433	6.5	3000	3100	2600	2600	9900	Mineral	50/55
	22/0.433	6.5	3000	3000	2650	2900	10600	Silicone	50/55
5000	22/6.6	8	3000	2800	2800	3500	13500	Silicone	55/60
	22/6.6	8	3000	2700	2700	3300	1200	Mineral	55/60

Above data are only examples to give an overview of possible standard transformers and are subjected to changes without prior notice.

Technical features

Unit ratings : 0.63MVA ~ 10MVA
System voltage : Up to 36kV
Available fluids : Mineral oil, silicone
Design standard : IEC, ANSI, BS, DES & Others

Outline drawing

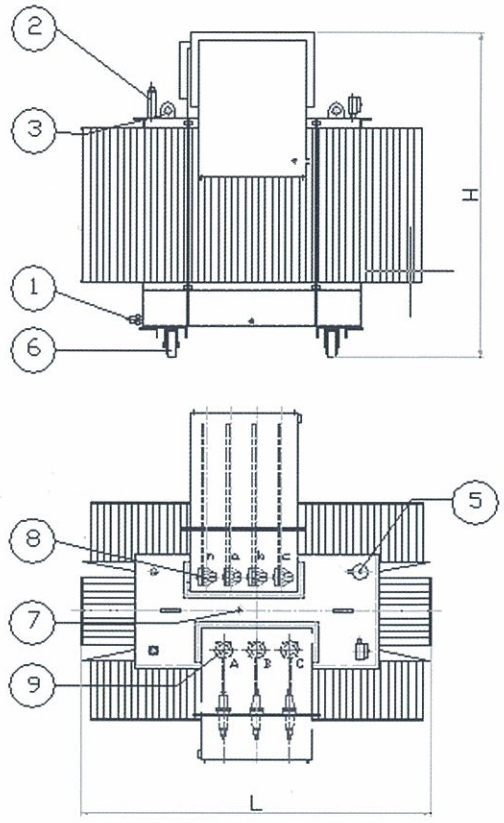

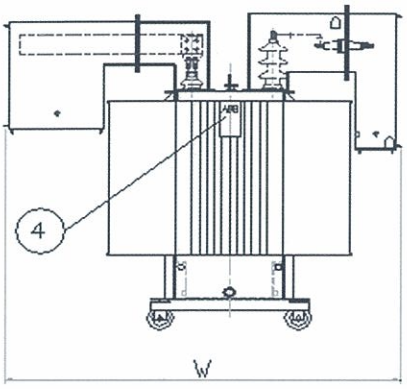

Note:

1) Transformer is hermetically sealed and fully liquid filled.

2) Dimension and weights

tol : ±5%

Standard and optional accessories

Standard accessories:

1. Drain filter valve
2. Filling pipe
3. Lifting eye
4. Rating and connection plate
5. Thermometer pocket
6. Underbase with roller
7. Tap operating handle (Padlockable)
8. LV bushings
9. HV bushings

Optional accessories:

- Oil conservator
- Silica-gel breather
- Bucholz relay
- RIS control device
- Pressure relief device with contacts
- Tap changer with more than 5 positions
- Winding temperature indicator with 2 contacts



Enhanced design

Quality has always been ABB's priority. To ensure that our transformers remain the top of the range, ABB conducts regular reviews on our design features and manufacturing process.

Welded tank cover
Welded tank cover seals all openings tightly and avoids any oil leakages associated with bolts and nuts.

Tank
Adding flat bar stiffeners to the corrugated fin wall tank prevent isotropic vibrations which is the primary cause of oil leakages on the tank.

Cable box stand
Cable box stand acts as a support for the cable box to prevent it from sagging due to massive cables. This reduces the possibilities of oil leakages accompanying heavyweight. Available for cables with more than 20 ways.

Bus bar insulator
Additional insulators are provided to add support to the bus bar. Available for cables with more than 4 ways.

Accessories
Gaskets
Gaskets are used extensively for the LV and HV bushings. Together with a special type of sealant, gaskets provide good mechanical seals to prevent oil leakages while under compression.

Oil level indicator
Enlarged surface area of oil level indicator pipe allows usage of larger dimensioned gaskets, resulting in better protection against oil leakages.

Pressure relief valve (PRV)
Increased height of the PRV to prevent accidental pressure (eg, people stepping on PRV) that leads to oil leakages.

Transport / Delivery
Rubber pads and wooden support are utilised during transportation and delivery to sites to absorb excessive vibrations that may cause wear and tear to the transformer.

Free maintenance
We provide free quarterly visual inspection for 1 year (according to ABB standard for transformers installed in Singapore only).



Medium distribution transformers, MDT

Applications

Medium distribution transformer (MDT) is mainly used to step down or step up voltage for energy distribution in metropolitan areas and for industrial purposes.

Design

ABB's three phase transformers can be manufactured with off-circuit tap changer or on-load tap changer. The core is constructed of grain oriented steel laminations with windings made of paper insulated rectangular copper or aluminium wire in the form of multi-layer disc or helical windings. Depending on the transformer power ratings and maximum forced cooling, the tanks can either come with radiators or corrugated fin walls. Upon request, the transformer may be equipped with an oil conservator.

Radiators are usually used when the transformer power ratings exceed 6 MVA and can achieve a maximum forced cooling of 40 percent of its rating.

Corrugated fin walls are usually used when transformer power ratings is less than 6 MVA and can achieve a maximum forced cooling of 25 percent of its rating.

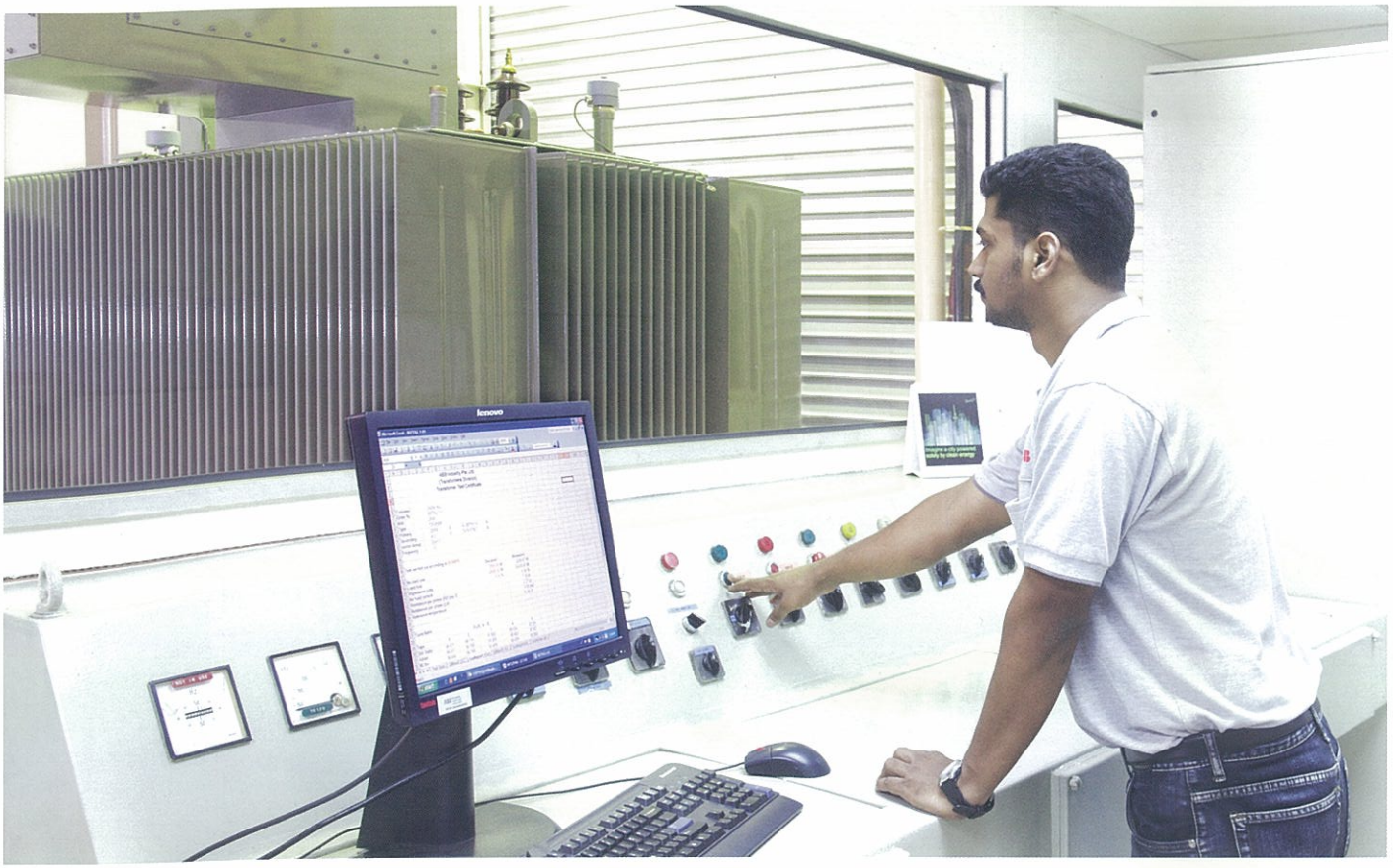

Routine tests

Our transformers are manufactured and tested individually according to IEC 60076 or ANSI C57 standards. The manufacturing process and facilities are certified to ISO 9001 quality management system and ISO 14001 environment management system.

Routine tests

- Measurement of winding resistance
- Measurement of voltage ratio and check of phase displacement
- Measurement of short circuit impedance and load loss
- Measurement of no-load loss and current
- Dielectric tests including separate voltage withstand test and induced over voltage withstand test
- Measurement of insulation resistance

Upon request, witnessed type/special tests can be carried out:

Type tests

- Temperature rise test
- Lightning impulse test
- PD-test
- Chopped wave test
- Measurement of zero-sequence impedance on three phase transformers
- Short-circuit test
- Measurement of sound level
- Measurement of the harmonics of the no-load current
- Test of auxiliary equipment and wiring
- Test on-load tap changer
- Leakage test for transformer tank



Service portfolio

ABB's service portfolio maximises the value of transformer assets by reducing the life cycle cost and ensuring optimum performance.

Engineering and consulting

Through the provision of optimal equipment redesign, analysis, expertise and proposal with the implementation of action plans and training, you can form the foundation for an effective and complete solution. The total experience of ABB's team of worldwide transformer experts is at your disposal when it comes to solving complex problems.

Retrofit and repair

ABB has an effective service network across its range of transformer factories and dedicated service facilities. With our retrofit and repair services, customers can expect improved performance, increased value of existing equipment due to full technical restoration and modernisation. Additionally, we provide complete component checks either on-site or in the workshop. ABB utilises special processes and tools to ensure the highest quality and short lead time when on-site.

Preventive maintenance

Our services guarantee the maximum protection for your transformer. Through the professional management of processes and site activities, ABB supports you in finding the optimal solution, be it condition enhancement, refurbishment, supply of original spare part or oil testing. Following are some of the oil tests that ABB provides:

a. Dielectric oil strength test
b. Dissolved gas analysis
c. Moisture content test
d. Furan analysis
e. Interfacial tension
f. Corrosive sulphur
g. Acidity

Service contract

The service contract covers identification and traceability of equipment, periodic status assessment, condition based maintenance, repair and performance improvement, asset optimisation, erection and commissioning, and user training.

Contact us

ABB [redacted] Pte Ltd
Transformers manufacturing
No. 1 Gul Crescent
Singapore 629517
Phone: +65 6861 2954
Fax: +65 6861 0037

Main office
2 Ayer Rajah Crescent
Singapore 139935
Phone: +65 6776 5711
Fax: +65 6778 0222
www.abb.com/transformers

Note
We reserve the right to make technical changes or modify the contents of this document without prior notice. With regard to purchase orders, the agreed particulars shall prevail. ABB does not accept any responsibility whatsoever for potential errors or possible lack of information in this document.

We reserve all rights in this document and in the subject matter and illustrations contained therein. Any reproduction, disclosure to third parties or utilization of its content - in whole or in parts - is forbidden without ABB's prior written consent.

© Copyright 2009 ABB
All rights reserved

1LAB 000112 | 2009-07-15

Power and productivity
for a better world™