Medium voltage products

UniGear ZS1
Single busbar system
Air insulated switchgear for power application

Each panel consists of a single unit that can be equipped with circuit-breaker, contactors or switch-disconnector, as well as all accessories for the switchgear's conventional units.

Each panel provides a cubicle in the upper part for auxiliary instrumentation.

The units can be coupled directly with UniGear 550, 500R, MCC and double-level units, with optional extension available on both ends of the switchgear.

The switchgear does not require rear access for installation and maintenance procedures.

All service operations are carried out from the front.



Range
- …12-17.5 kV, …4000 A, …50 kA
- …24 kV, …3150 A, ...31.5 kA
- Standard IEC
- Highly customized versions

Safety
- Fitted with safety interlocks
- Internal arc classification IAC AFLR
- Classified LSC-2B, PM
- CB racking with closed door

Flexibility
- Wide range of applications
- Vacuum and SF6 circuit-breaker
- Vacuum contactor
- Traditional CT/VT and sensors
- Wall and free-standing solution

Quality
- ABB quality
- Large installed base
- Installed in multiple countries

Design includes
- Protection and control
- Earthing switch
- IS Limiter
- Load break switch
- Integrated capacitor banks
- Bay computer

Power and productivity
for a better world™

Technical data

Switchgear		UniGear 12 kV	UniGear 17 kV	UniGear 24 kV
Type of construction - Internal Arc Classification		IAC AFLR	IAC AFLR	IAC AFLR
Rated voltage	[kV]	12	17.5	24
Insulation levels / power frequency / lightning impulse	[kV]	12 / 28 / 75	17.5 / 38 / 95	24 / 50 / 125
Rated frequency	[Hz]	50 / 60	50 / 60	50 / 60
Rated main busbar current (40 °C)	[A]	... 4000	... 4000	... 3150
Rated feeder current (40 °C)	[A]	... 4000	... 4000	... 3150
Rated short-time current	[kA x 3 s]	... 50	... 50	... 31.5
Arc proof withstand current (IEC 62271-200)	[kA x 1 s]	... 50	... 50	... 31.5
Tested according to		IEC	IEC	IEC
Overall dimensions of the basic cubicle 	H [mm]	2200 ... 2675 *)	2200 ... 2675 *)	2325 ... 2733 *)
	W [mm]	650 / 800 / 1000 **)	650 / 800 / 1000 **)	800 / 1000 **)
	D [mm]	1340 / 1390	1340 / 1390	1700
Technical catalogue	No.	1VCP000138	1VCP000138	1VCP000138

*) With installed exhaust gas duct
**) Depending rating of nominal current

Single-line diagram of typical units

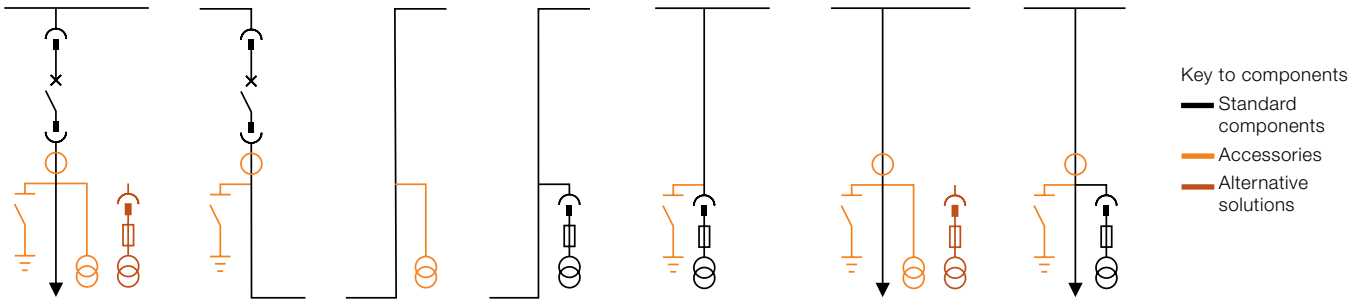

IF
Incoming/ outgoing feeder

BT
Bus-tie

R
Riser

RM
Riser with measurements

M
Measurements

IFD
Diret incoming/ outgoing feeder

IFDM
Diret incoming/outgoing feeder with measurements

Typical feeder unit

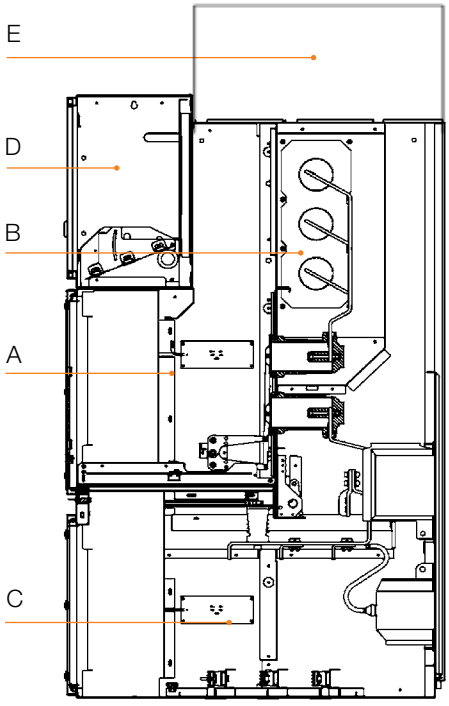

A Circuit-breaker compartment
B Main busbars compartment
C Cable compartment
D Low voltage compartment
E Standard exhaust gas duct

For more information please contact:

Your sales contact: www.abb.com/contacts
More product information: www.abb.com/productguide

The data and illustrations are not binding. We reserve the right to make changes without notice in the course of technical development of the product.

© Copyright 2012 ABB. All rights reserved.

1VCP000071 - Rev. B, en - Leaflet - 2012-09 - (UniGear ZS1) (gs)

Power and productivity for a better world™