DRIVEN BY MOTION

ACTIVEPOWER®

CLEANSOURCE® 625HD UPS

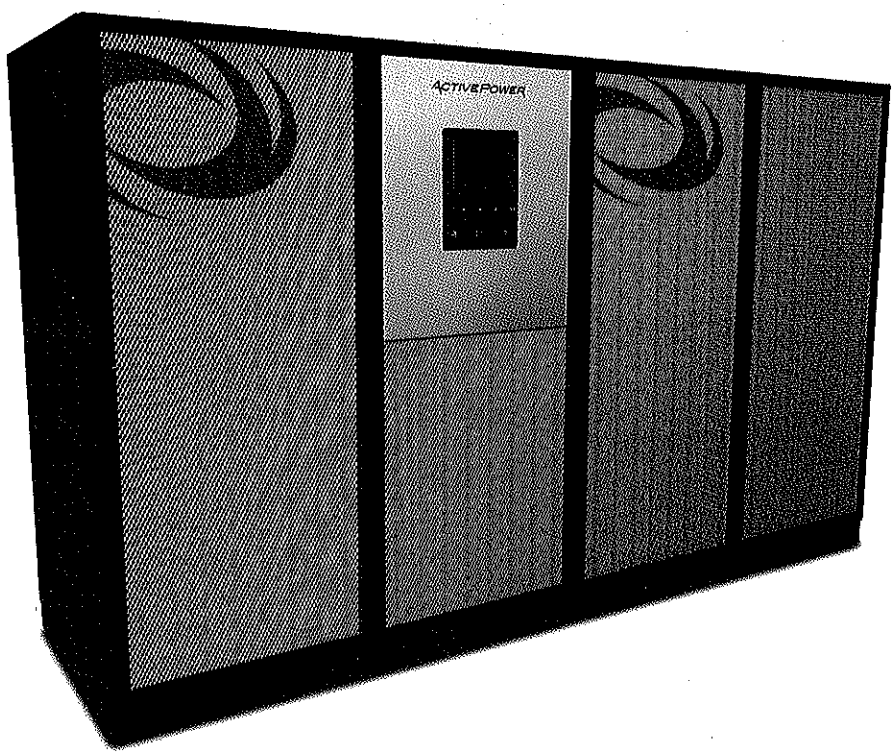

DELIVERING

UNMATCHED

POWER DENSITY, RELIABILITY, AND TCO

CleanSource 625HD UPS

Active Power's CleanSource 625HD delivers unmatched power density, reliability, and total cost of ownership. Based on a field-proven design, our Flywheel UPS is a perfect fit for today's mission critical applications, especially Data Centers. CleanSource 625HD also introduces a new level of reliability and design flexibility with the Extended Runtime option, which can support up to 15 minutes of runtime.

Parallel Online Architecture

The CleanSource 625HD is rated at 625 kVA / 625 kW. Up to 7 UPS systems can be paralleled for redundancy or capacity, supporting over 4.3 MW of backup power in a single paralleled system.

Active Power's Parallel Online Architecture provides excellent isolation between input and output, while delivering a clean sinusoidal waveform to critical loads. CleanSource 625HD UPS is able to protect against all 9 IEEE power disturbances, such as voltage fluctuations, harmonics and complete power outage.

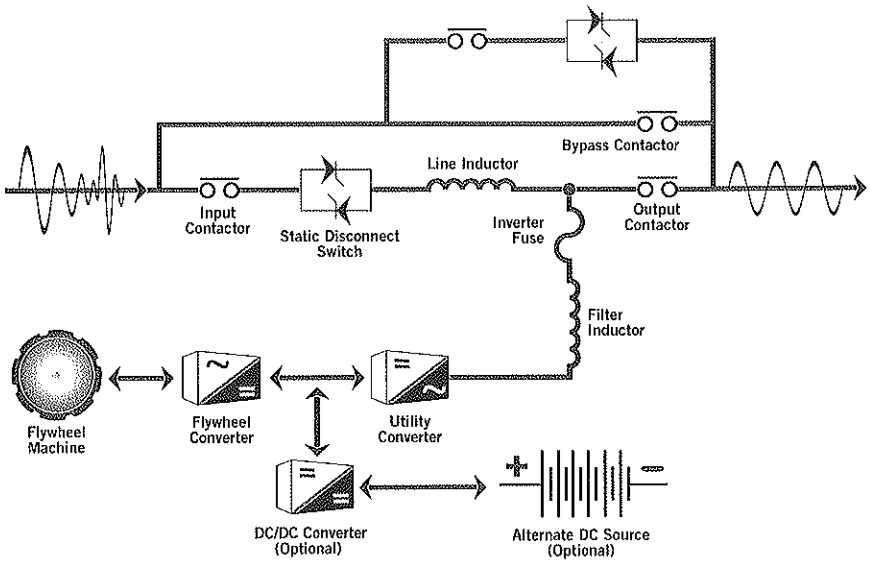

Flywheel Technology

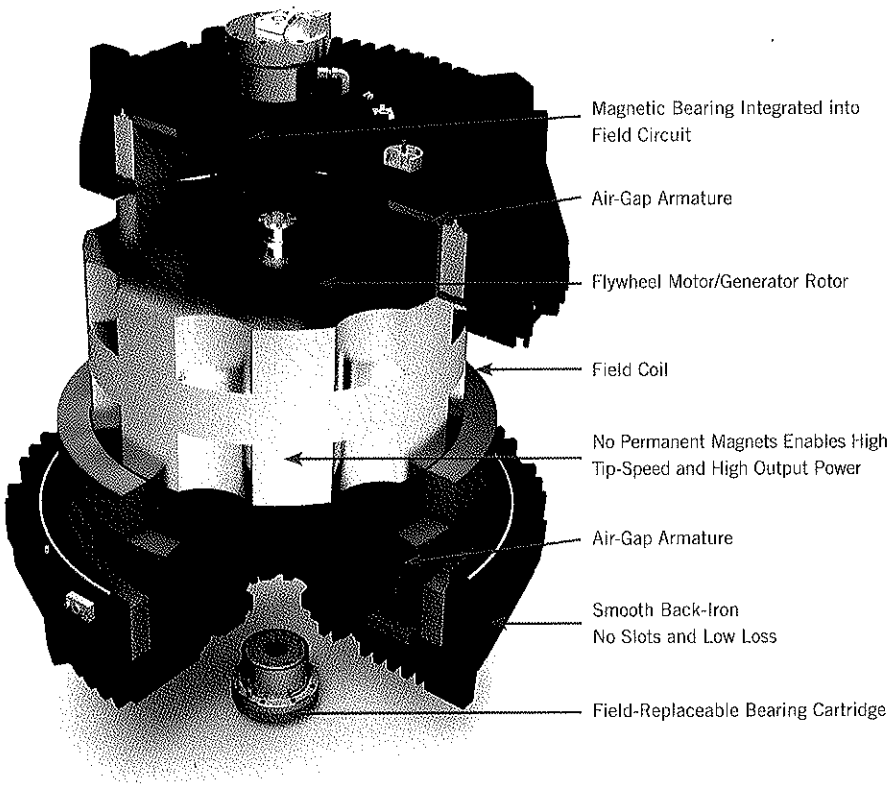

Stores 10.5 MJ of energy • Up to 1 minute of runtime (load dependent)
Wide ambient temperature range – 0°C – 40°C • High density, high efficiency design

Extended Runtime

For applications requiring additional power backup time before switching over to a generator source, CleanSource 625HD can be configured with an Extended Runtime option. This system is composed of Flywheel and standard Valve Regulated Lead Acid (VRLA) Batteries supporting up to 15min of additional runtime, increasing overall system reliability and minimizing footprint. The flywheel is also able to eliminate short duration battery discharges, a primary factor in battery degradation.

Service & Maintenance

Active Power has designed the CleanSource 625HD with ease of maintenance in mind to ensure your critical power infrastructure operates with the utmost reliability. CleanSource 625HD requires only simple and non-invasive annual maintenance and a bearing change every third year. This streamlined maintenance schedule both restores your UPS to factory-like condition and reduces downtime during its operating life, improving the availability of your data center.

AN UNMATCHED COMBINATION

POWER DENSITY

CleanSource 625HD frees up valuable room in your data center, enabling you to install more IT load, put in additional redundancy, or build/lease less floor space.

CleanSource 625HD supports nearly 20 kW per square foot vs. less than 9 kW per square foot for battery-based UPS, more than double the power density of traditional solutions. All told, CleanSource 625HD consumes just 35 square feet of floor space - less than half its leading competitors.

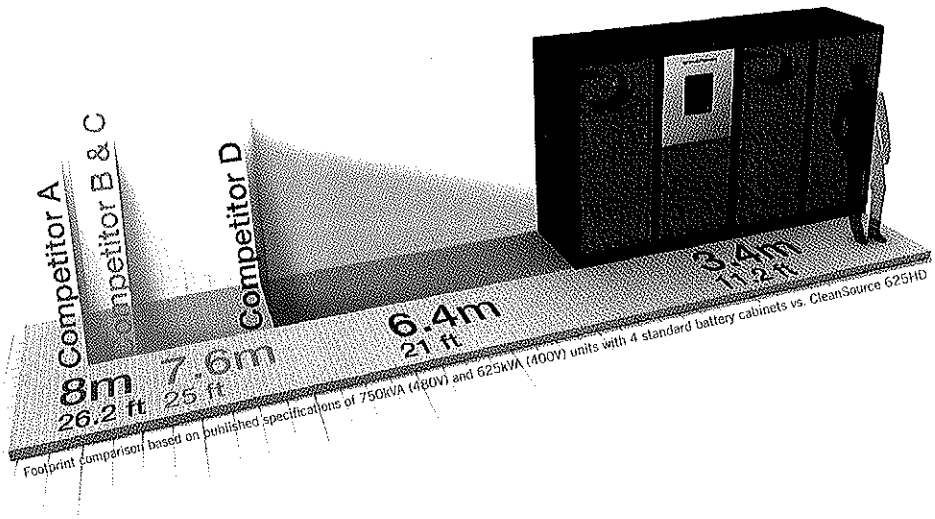

RELIABILITY

The integrated flywheel energy storage at the core of CleanSource 625HD makes it inherently reliable, delivering predictable, consistent backup power. The normal state of CleanSource 625HD is with the flywheel spinning constantly, storing kinetic energy. When called upon during a utility outage, the flywheel is ready to assume the load. By contrast, battery failures are the leading cause of UPS load loss and system downtime.

The Extended Runtime option further increases the reliability and availability of your UPS. By adding a second energy storage source, Extended Runtime makes CleanSource 625HD the most reliable UPS system available.

"With a dynamic electromechanical system like CleanSource 750HD, demand failures are highly unlikely. With the flywheel spinning, any changes affecting system health are detected and repairable prior to an outage occurring. Conversely, a battery based system is an electrochemical process and exhibits non-detectable failures even with monitoring and routine maintenance."

Steve Fairfax | President, MTechnology, Inc.

TOTAL COST OF OWNERSHIP

CleanSource 625HD combines a competitive first cost with lower ongoing operating expenses - up to 30% lower than traditional UPS over 5 years. The result is a dramatic TCO benefit for your data center, with net savings to you on day 1 of operation.

- Superior energy efficiency - over 96% efficient at 40% load
- Reduced cooling needs - no need for dedicated cooling for batteries
- Lower maintenance requirements - routine annual check-up and bearing change every third year
- No battery changes - integrated flywheel with 20-year life

5 YEAR OPERATING EXPENSE

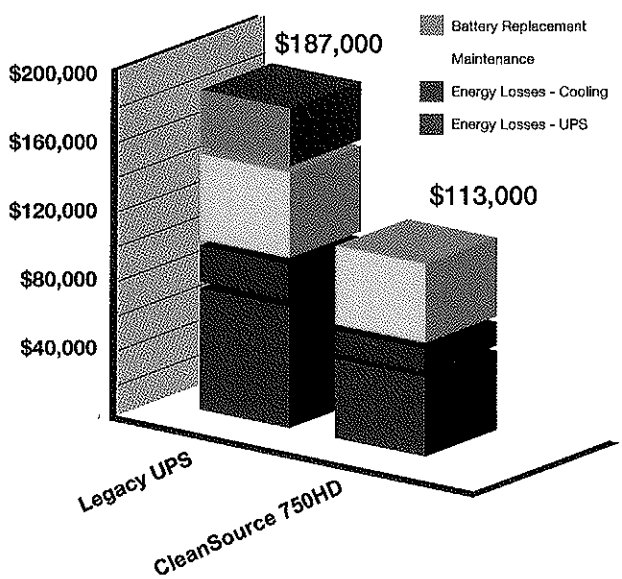

ACTIVE POWER CLEANSOURCE 625HD UPS

RATING	
Maximum kVA	625
Maximum kW	625

INPUT	
Voltage[1]	380/400/415 VAC 3-phase, 4-wire plus ground
Voltage Range[2]	+10% / -15% at 400/415V (programmable)
Frequency	50 Hz +/-10% maximum (programmable) +/- 3% (default)
Power Factor	0.99 at rated load and nominal voltage
Harmonic Current Distortion	
Linear Load	<2% at 100% load
Non-Linear Load[3]	<5% at 100% load
Current - Nominal (380 VAC)	990A
Current - Nominal (400 VAC)	940A
Current - Nominal (415 VAC)	906A
Current - Maximum	1200A
Surge Withstand	Meets IEEE 587/ANSI C62.41
Walk-In	1 to 15 seconds (programmable)
Internal Backfeed Protection	Yes

OUTPUT						
Voltage	380/400/415 VAC 3-phase, 4-wire plus ground					
Voltage regulation						
Steady state	+/-1% for +/-10% input					
Flywheel mode	+/-1% steady state					
Transient	+/-1% within 50 mSec for 100% load step					
Voltage distortion[3]	<1% linear loads and <5% for 100% non-linear loads					
Inverter	PWM with IGBT switching					
Frequency	50Hz (mains synchronized) (normal operation +/- 0.2% free running)					
Load Power Factor Range	0.7 lagging / 0.9 leading without derating					
Slew Rate	Adjustable from 0.2Hz/second to 3.0Hz/second					
Current - Nominal (380 VAC)	951A					
Current - Nominal (400 VAC)	903A					
Current - Nominal (415 VAC)	871A					
Overload Capability-Mains Operation	Cont.	10 min	5 min	1 min	10s	Immediate
	105%	<110%	<125%	<150%	<200%	>200%
UPS Efficiency[4]	96.5% @ 50% load up to 98% @ 100% load					

ENERGY STORAGE				
Type	Integrated Steel Flywheel spinning at 7,700 RPM			
Flywheel Runtime (% Load)	100%	75%	50%	25%
	16s	21s	31s	58s
Flywheel Recharge Time	< 2 min (nominal) at 175kW 3 min (programmable) at 100kW			
Extended Runtime Option	Up to 15 min with VRLA Batteries			

GENERAL	
Parallel Capability	Yes, up to 7 systems
Internal Static Bypass	Included
Control Panel	10-inch Color Touchscreen Graphical Display
Withstand Capability[5]	65kA
Remote Monitoring	Yes (optional)
External Customer Contacts	8 Input and 8 Outputs (programmable)

ENVIRONMENTAL	
Audible Noise	<83 dBA at 1 meter
Temperature	
Operating	0°C to 40°C
Storage	-25°C to 70°C
Humidity	5% to 95% (non-condensing)
Altitude[4]	Up to 1,000m 1.2°C derating for every 300m above 1000m
Emissions and Immunity	EN 62040-2
Heat Rejection- Online	19.78kW / 67,522 BTU/hr

PHYSICAL DATA	
Height	2,032 mm
Width	3,353 mm
Depth	991 mm
Weight	5,375 kg
Cable Entry	Top or Bottom

SAFETY
EN 62040-1-1

WARRANTY
12 months from startup / 18 months from shipment

ADDITIONAL OPTIONS
3-wire Input
Dual Input
Remote SNMP / MODBUS Monitoring
CSView - Real-time Monitoring
GenSTART - Generator Start Power
Remote EPO
Floorstand Kit
Remote Status Panel
Extended Runtime Cabinet

SYSTEM FEATURES
Online and Fault-Tolerant UPS
Predictable Flywheel Energy Storage
20-year Design Life
Wide Operating Temperature Range
Quick Recharge Time
Low Maintenance and Service
Comprehensive Service and Support
Multi-vendor Generator and Switchgear Compatibility
Simple and Cost Effective Installation
No Hazardous Waste Material
Field Proven Reliability

[1] From grounded wye source
[2] +/-10% at 380VAC
[3] EN 62040-3
[4] DC energy storage offline
[5] Design per UL891

DRIVEN BY MOTION
ACTIVE POWER

World Headquarters
2128 W. Braker Lane, BK12 • Austin, Texas 78758-4028
Tel: 512.836.6464 • Fax: 512.836.4511
sales@activepower.com

www.activepower.com

©&™ 2014 Active Power, Inc. All rights reserved. Materials and specifications are subject to change without notice. CSHD-400-UK-1014