DRIVEN BY MOTION

ACTIVEPOWER

Compatible with major UPS brands as a battery-free alternative or supplementing or replacing battery strings in existing UPS installations driving down lifecycle cost while improving reliability.

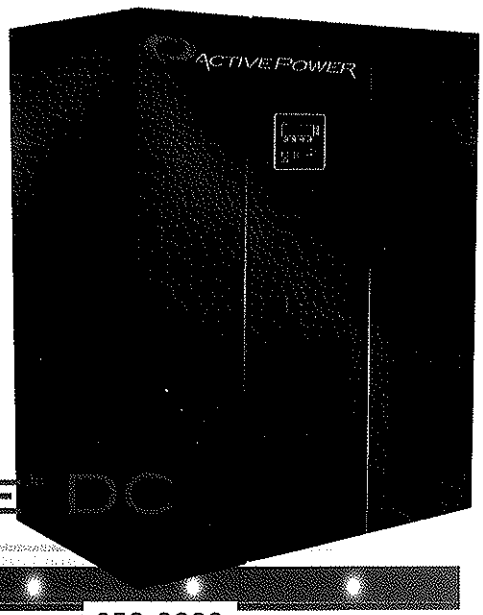

CLEANSOURCE® DC

battery-free energy storage | high reliability | 99% efficiency | 20 year design life | 250-2000 kW

SYSTEM FEATURES

- *Predictable flywheel energy storage*
- *99% efficiency*
- *Multi-vendor UPS and generator compatibility*
- *Handles multi-load characteristics*
- *Cost-effective lifecycle cost*
- *Redundant architecture*
- *Parallel capability up to 2,000kW*
- *20-year design life*
- *Low service and maintenance requirements*
- *Smallest available footprint*
- *Rapid recharge time*
- *Predictive failure analysis*
- *Wide operating temperature range*
- *Remote and local monitoring*
- *Quiet operation*
- *Fault compartmentalization*
- *Simple and cost-effective installation*
- *Field-proven reliability*
- *No hazardous waste material*

Optional Features

- Remote SNMP/MODBUS monitoring capability
- CleanSource View™ - advanced real-time monitoring
- Remote status panel
- Front panel DC disconnect
- Seismic provisions
- Additional flywheels for cpacity or redundancy
- GenSTART™ Generator Start Power

FLYWHEEL TECHNOLOGY

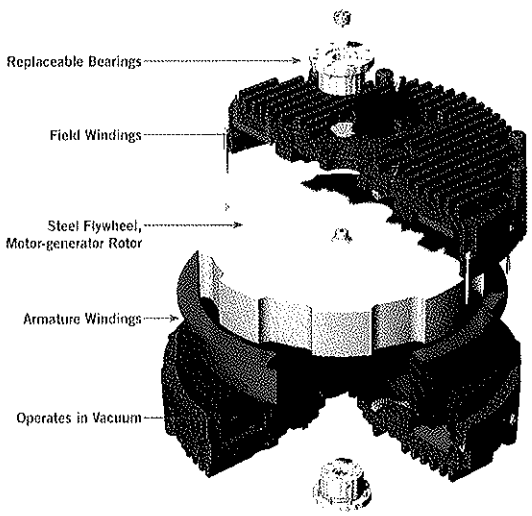

intelligently EFFICIENT | inherently RELIABLE | economically GREEN

ACTIVEPOWER

CLEANSOURCE DC SOLUTIONS PARALLELED FOR RIDE-THROUGH

	kW									
Model	50	100	150	200	250	300	350	400	450	500
CleanSource DC-250	69.0	34.5	23.0	17.3	13.8	Time in Seconds				
CleanSource DC-500	138.0	69.0	46.0	34.5	27.6	23.0	19.7	17.3	15.3	13.8
CleanSource DC-750	207.0	103.5	69.0	51.8	41.4	34.5	29.6	25.9	23.0	20.7
CleanSource DC-1000	276.0	138.0	92.0	69.0	55.2	46.0	39.4	34.5	30.7	27.6
CleanSource DC-1250	345.0	172.5	115.0	86.3	69.0	57.5	49.3	43.1	38.3	34.5
CleanSource DC-1500	414.0	207.0	138.0	103.5	82.8	69.0	59.1	51.8	46.0	41.4
CleanSource DC-1750	483.0	241.5	161.0	120.8	96.6	80.5	69.0	60.4	53.7	48.3
CleanSource DC-2000	552.0	276.0	184.0	138.0	110.4	92.0	78.9	69.0	61.3	55.2

CLEANSOURCE DC SOLUTIONS PARALLELED FOR CAPACITY

	kW									
Model	525	600	675	750	900	1000	1250	1500	1750	2000
CleanSource DC-750	19.7	17.3	15.3	13.8						
CleanSource DC-1000	26.3	23.0	20.4	18.4	15.3	13.8	Time in Seconds			
CleanSource DC-1250	32.9	28.8	25.6	23.0	19.2	17.3	13.8			
CleanSource DC-1500	39.4	34.5	30.7	27.6	23.0	20.7	16.6	13.8		
CleanSource DC-1750	46.0	40.3	35.8	32.2	26.8	24.2	19.3	16.1	13.8	
CleanSource DC-2000	52.6	46.0	40.9	36.8	30.7	27.6	22.1	18.4	15.8	13.8

BATTERY LIFE EXTENSION CONFIGURATION

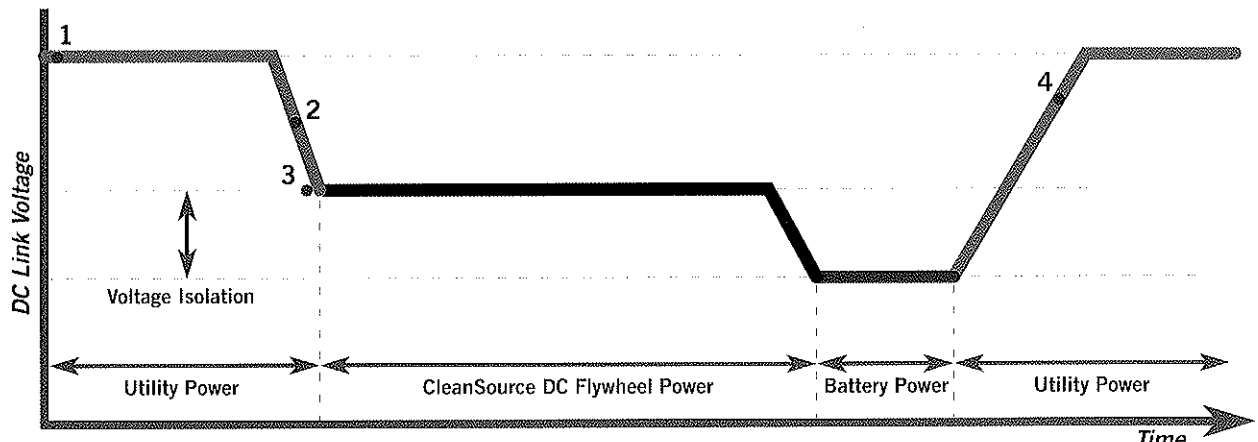

• Programable voltage settings for variable configurations

OPERATIONAL CHARACTERISTICS PARAMETERS

These four programmable parameters determine the operational characteristics of the CleanSource DC. The parameters allow for customized installations to support any DC bus in the range of 360 to 600 VDC.

1. **UPS Float Voltage:** Reference parameter.

2. **Discharge Trigger Voltage:** DC voltage level at which the CleanSource DC reacts to the falling DC link voltage level and goes into a discharge to support the load.

3. **CleanSource DC Discharge Voltage:** DC voltage level that is held constant throughout the CleanSource DC discharge.

4. **CleanSource DC Recharge Threshold Voltage:** DC voltage level at which the CleanSource DC will start to recharge. Ensures the CleanSource DC does not recharge if the UPS is on battery power.

BATTERY LIFE EXTENSION CONFIGURATION

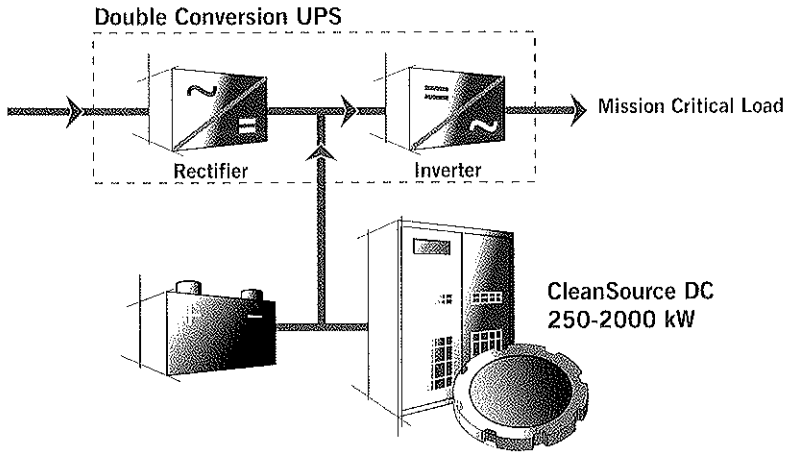

- Extends Life of Batteries
- Battery Isolation & Redundancy
- Increases System Reliability
- Adaptive Voltage Settings
- No Special Connections
- Parallel up to 2000 kW or Extended Runtime (~120 Seconds)
- Small Footprint

GLITCH PROTECTION CONFIGURATION

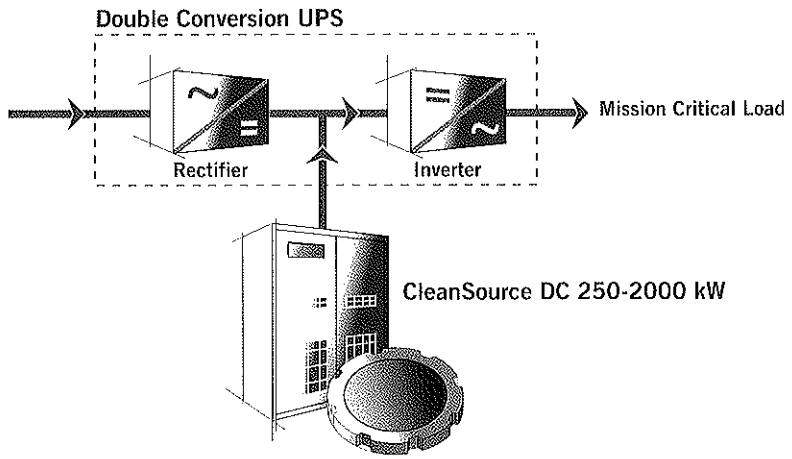

- Battery-Free Operation
- No Generator Expense
- Industrial Process Protection
- Addresses 98% of Power Events
- Operational Range 0° to 40° C
- Parallel up to 2000 kW or Extended Runtime (~120 Seconds)
- Small Footprint

CONTINUOUS POWER CONFIGURATION

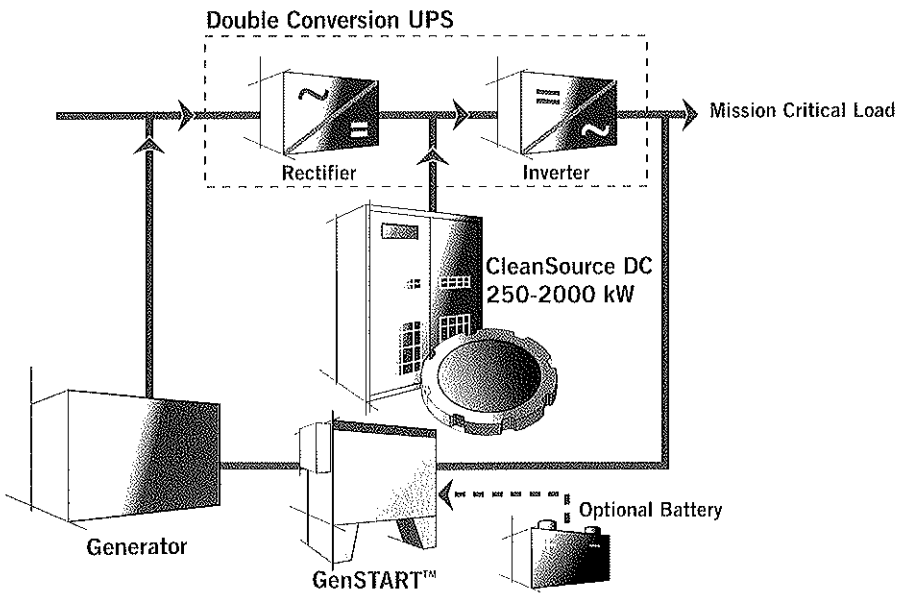

- Battery-Free Operation
- Increases System Reliability
- Programmable Voltage Settings
- Parallel up to 2000 kW or Extended Runtime (~120 Seconds)
- Reliable Bridging to Generator
- Small Footprint

PRODUCT SPECIFICATIONS

Model	CleanSource DC-250	CleanSource DC-500
Rating		
Maximum kW	250	500
Input, DC		
Float Voltage	400 to 600 VDC	
Charging Current	15 to 100 Amps per Flywheel	
Charging Time from Discharge	< 2.5 Minutes per Flywheel at Maximum Recharge Current	
Charging Time at Start-Up	< 7.5 Minutes per Flywheel at Maximum Recharge Current	
Standby Current (average)	2-3 ADC	4-6 ADC
Input, AC		
Auxiliary Voltage	120/240/480 VAC	
Auxiliary Frequency	50 or 60Hz	
Auxiliary Current (120 VAC)	28 Amps	
Auxiliary Current (240 VAC)	14 Amps	
Auxiliary Current (480 VAC)	7 Amps	
Output, DC		
Discharge Voltage	360 to 550 VDC	
Maximum Rated Output Power[1]	480 to 550 VDC	
DC Voltage Regulation	+/- 1% steady state	
DC Ripple	< 2 %	
Environmental		
Audible Noise	<70 dBA at 1 meter	<72 dBA at 1 meter
Temperature		
Operating	0 to 40 degree Celsius	
Storage	-25 to 70 degree Celsius	
Humidity	5% to 95% (non-condensing)	
Altitude[3]	Up to 4,000 ft / 1,219 meter	
Heat Rejection		
kW	2.5	4.1
BTU/Hr	8,554	14,154
Physical Data		
Height	78 in 1,981 mm	
Width	42 in 1,067 mm	59 in 1,499 mm
Depth	34 in 865 mm	
Weight	1,561 kg 3,441 lbs	2,735 kg 6,030 lbs
Cable Entry	Top or bottom entry[2]	
Safety	EN62040-1-1	

[1]Power rating decreases in a linear fashion as discharge voltage setting is reduced from 480 to 360 VDC
[2]CleanSource DC-250 require an optional (17 in / 432 mm) side car for bottom entry
[3]Derate operating temperature for higher elevations

CE

c UL us LISTED

DRIVEN BY MOTION
ACTIVE POWER

World Headquarters
2128 W. Braker Lane, BK12 • Austin, Texas 78758-4028
Tel: 512.836.6464 • Fax: 512.836.4511
sales@activepower.com

www.activepower.com

®™ 2015 Active Power, Inc. All rights reserved. Materials and specifications are subject to change without notice.