DRIVEN BY MOTION
ACTIVE POWER

EXTENDED RUNTIME CABINET (EXRC)

For the CleanSource® 625HD UPS

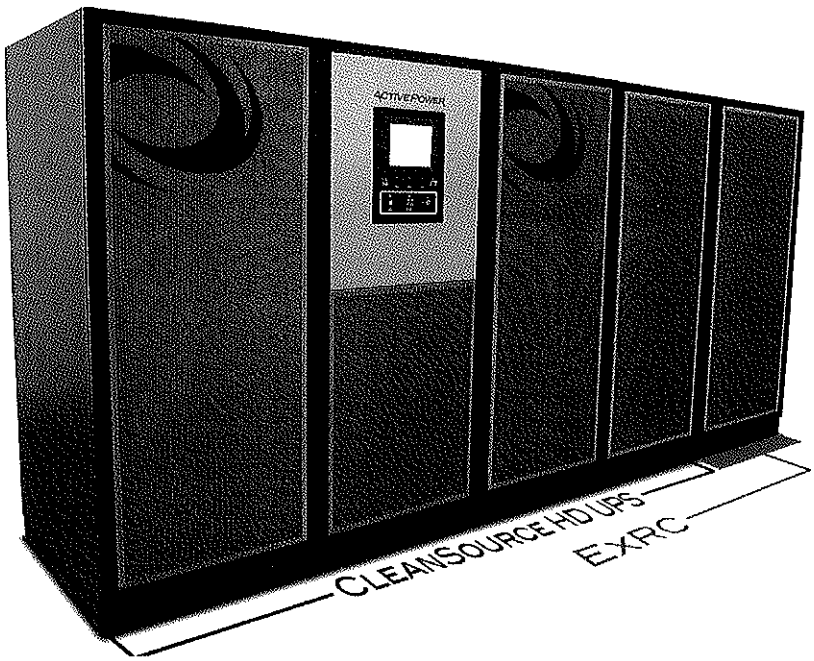

OVERVIEW

Active Power's Extended Runtime Cabinet (ExRC) delivers a more reliable energy backup system, combining flywheel and battery technologies for CleanSource 625HD UPS. For applications requiring longer UPS autonomy, the ExRC is able to offer from 2 to 30 minutes of additional runtime, while still minimizing footprint and associated costs.

APPLICATIONS

- Sequential start of multiple generators
- Automated second start on generator
- Cloud, virtualization or backup data center switchover
- Mission Critical Applications:
  - Data Centers
  - Enterprise
  - Financial
  - Healthcare
  - Colocation

UNMATCHED ENERGY STORAGE

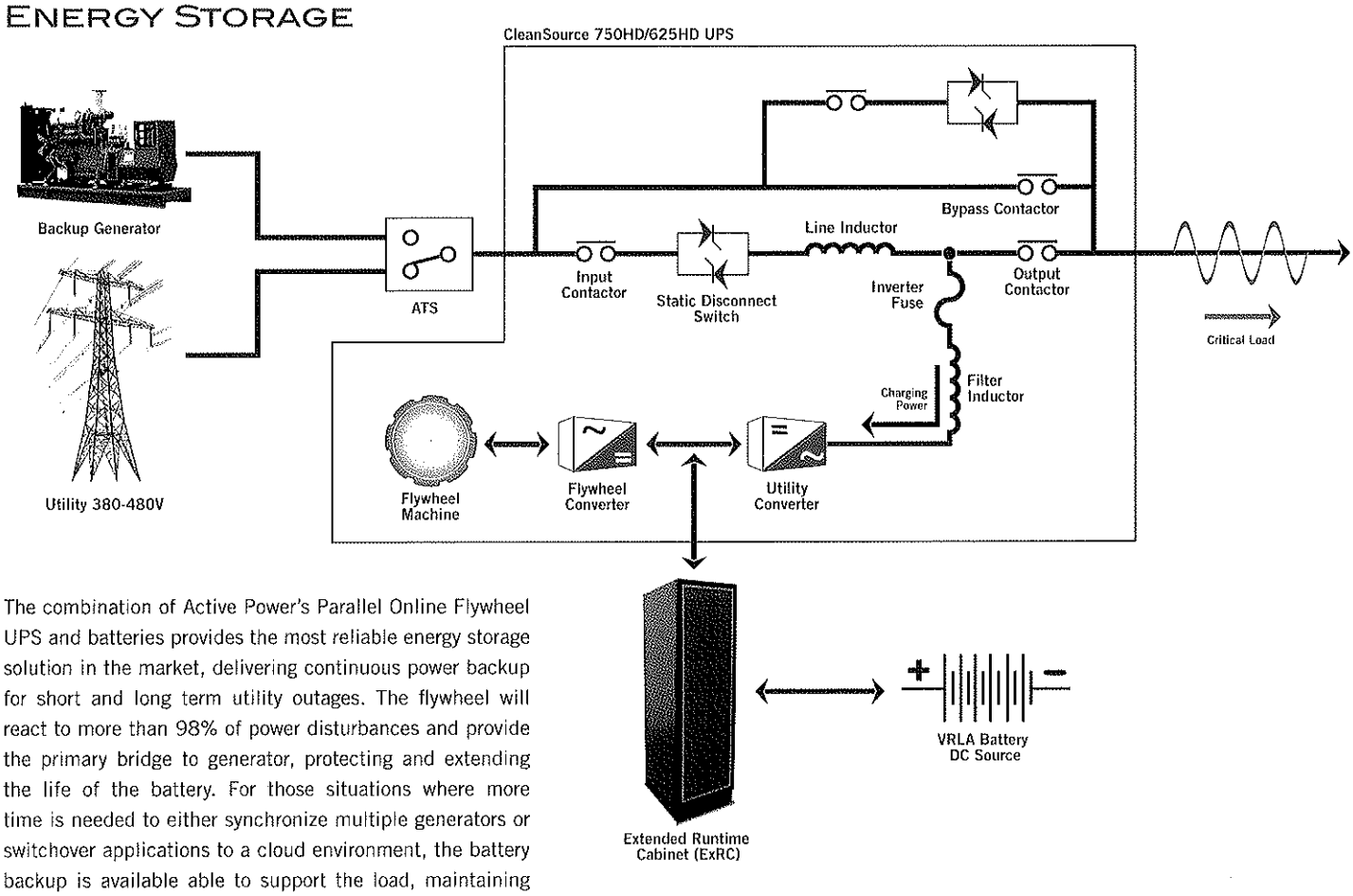

The combination of Active Power's Parallel Online Flywheel UPS and batteries provides the most reliable energy storage solution in the market, delivering continuous power backup for short and long term utility outages. The flywheel will react to more than 98% of power disturbances and provide the primary bridge to generator, protecting and extending the life of the battery. For those situations where more time is needed to either synchronize multiple generators or switchover applications to a cloud environment, the battery backup is available able to support the load, maintaining overall system availability and reliability.

Extended Runtime Cabinet (ExRC)



Power Density

Active Power's minimum battery solution reduces footprint by up to 40% compared to legacy UPS systems

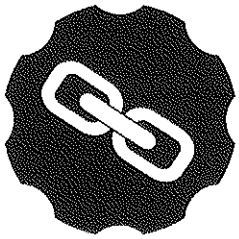

Reliability

Fully integrated UPS with flywheel and battery increase overall system reliability and reduce risk of failure by more than 20% over legacy UPS applications



Total Cost of Ownership

CleanSource HD with ExRC will reduce initial and replacement battery costs and provide higher energy efficiency, adding up to 40% lower TCO over traditional technologies

Key Benefits

- Flywheel and batteries fully integrated into a single system
- Flywheel is primary backup protection
- Flywheel will intelligently transfer "walk-in" load onto batteries, thus:
  - Eliminating severe step-load on battery
  - Mitigating coup de fouet (whiplash) effects on battery
  - Extending the runtime and life of the batteries
  - Increasing overall system reliability

Key Features

- Monitors key battery parameters, such as runtime, voltage, current and ambient temperature
- Alarms and notifications
- Interface, control, charge and self-test battery system
- Four stage battery charging
- Line and match solution with UPS
- Supports up to six standard VRLA cabinets or one centralized battery disconnect
- Top or bottom entry

For use with Active Power CleanSource 625HD UPS only

GENERAL	
Max Recharge Rate (UPS)	1/8th C or 200amps On Utility (adjustable)
	1/16th C or 100amps On Generator (adjustable)
Frequency	50 Hz +/- 10% maximum (programmable) +/- 3% (default)
ExRC Discharge efficiency	Above 97.5%
Nominal Battery Voltage	480Vdc
Max Battery Discharge Current	2000Amps
Float Voltage Range	540Vdc (2.25Vpc) – 560Vdc (2.33Vpc)
End of Discharge Voltage	415Vdc (1.73Vpc) - 400Vdc (1.67Vpc)
Equalize Voltage Range	560Vdc (2.33Vpc) – 600Vdc (2.5Vpc)
4 Stage Battery Charging	1) Bulk Charge (Voltage and Amps Adjustable)
	2) Absorption (Voltage and Amps Adjustable)
	3) Taper to Float (Voltage and Amps Adjustable)
	4) Float (Voltage Adjustable)

ENERGY STORAGE	
Batteries[1]	Valve Regulated Lead Acid (VRLA)
Battery Rating	10-year rated life @ 77°F/25°C
Battery Runtime	2 - 30 minutes
Maximum Number of Battery Cabinets[2]	Up to 6

ENVIRONMENTAL	
Audible Noise	<72 dBA at 1 meter
Temperature	
Operating	32 to 104° F (0 to 40°C)
Storage	-13 to 158° F (-25 to 70°C)
Humidity	5% to 95% (non-condensing)
Altitude	Up to 3,000 feet (914 meter) 1.2°C derating for every 1000ft above 3000ft
Emissions and Immunity	FCC Class A, Subpart J of Part 15/ EN 62040-2

PHYSICAL DATA	
Height	2,032 mm
Width	838 mm
Depth	991 mm
Weight	817 kg
Cable Entry	Top or Bottom

SAFETY
UL 1778 CUL CAN/CSA 22.2 No. 107.7

WARRANTY
1 year

SYSTEM FEATURES
Extended Runtime through VRLA Batteries
20-year Design Life
Low Maintenance and Service
Comprehensive Service and Support
Multi-vendor Generator and Switchgear Compatibility
Field Proven Reliability
Seismic Option Available

[1] Battery cabinets not included, other battery types available
[2] Direct landing or centralized DC disconnect

DRIVEN BY MOTION
ACTIVE POWER

World Headquarters
2128 W. Braker Lane, BK12 • Austin, Texas 78758-4028
Tel: 512.836.6464 • Fax: 512.836.4511
sales@activepower.com
www.activepower.com

©2015 Active Power, Inc. All rights reserved. Materials and specifications are subject to change without notice. CSHD-EXRC-UK-0315