Power Saving LED Flood Light

Features of Aristo's LED Modules

World's Most Efficient LED Chip

Aristo incorporate with world's most efficient LED chip at 140 lumen/watt.

Low Power & Heat Emission

Product is designed by Aristo Engineering by taken into consideration of low power consumption and heat emission.

Floodlight Line Up

AFL-WR7-100





Light Distribution Data (θ = 50 degree) (*1)

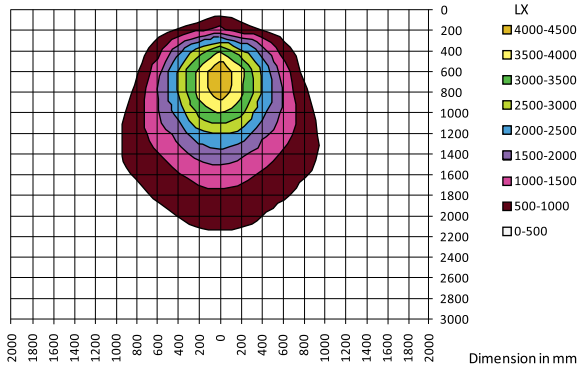

Outline Dimension (mm)

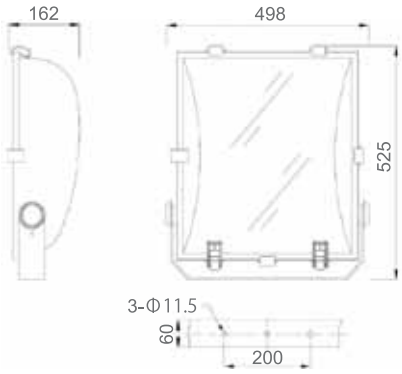

AFL-WR7-60





Light Distribution Data (θ = 50 degree) (*1)

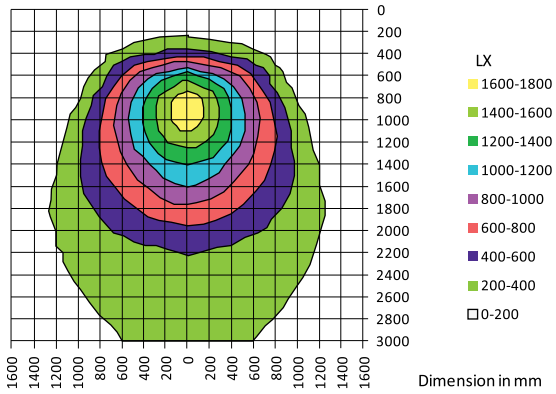

Outline Dimension (mm)

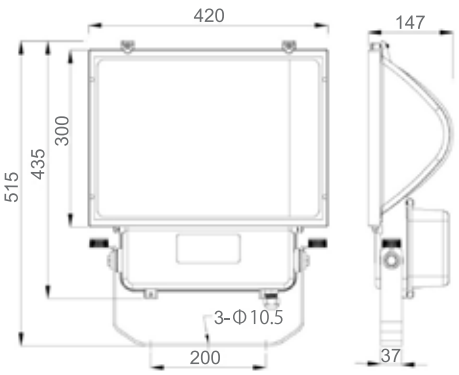

AFL-WR7-20





Light Distribution Data (θ = 50 degree) (*1)

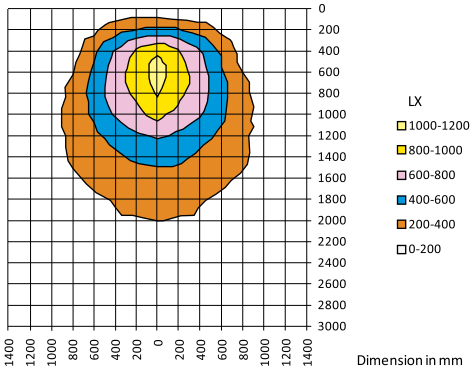

Outline Dimension (mm)

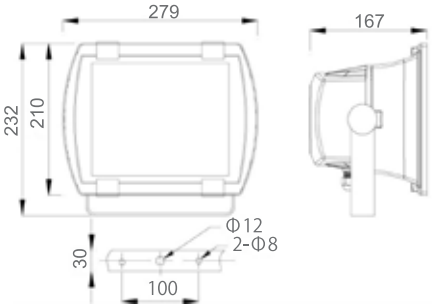

AFL-WR7-10 / AFL-LR7-10





Light Distribution Data (θ = 50 degree) (*1)

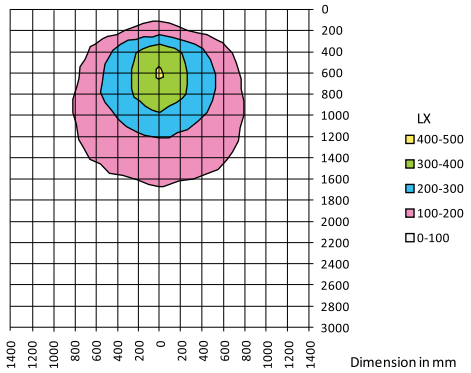

Outline Dimension (mm)

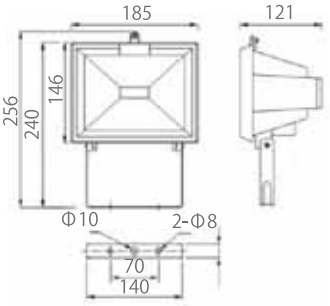

AFL-WR7-06 / AFL-LR7-06





Light Distribution Data (θ = 50 degree) (*1)

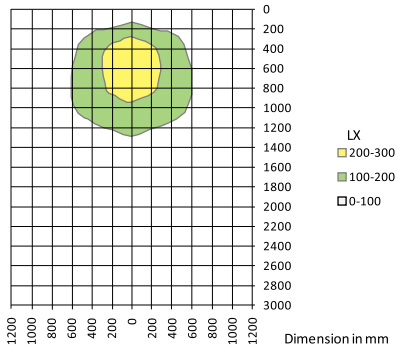

Outline Dimension (mm)

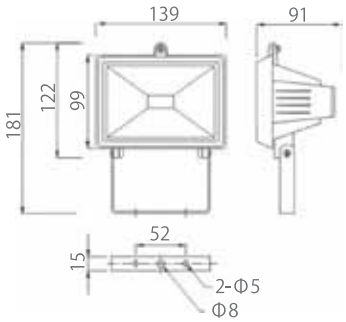

Models

Part Number	Power	LED Color	Brightness	IP Rating	Weight
AFL-WR7-100	120W	Daylight	10,000 lm	IP65	9.4Kg
AFL-WR7-60	65W	Daylight	6,100 lm	IP65	6.8Kg
AFL-WR7-20	26W	Daylight	2,300 lm	IP65	3.5Kg
AFL-WR7-10	13W	Daylight	1,000 lm	IP44	1.8Kg
AFL-LR7-10	13W	Warm White	800 lm	IP44	1.8Kg
AFL-WR7-06	8W	Daylight	570 lm	IP44	0.6Kg
AFL-LR7-06	8W	Warm White	450 lm	IP44	0.6Kg

Flood Light Basic Specification

Input Voltage	AC85V ~ AC265V
Expectancy LED Life Span	30,000 hrs
Housing	High Pressure Aluminium Die-Cast
Housing Surface Finishing	Epoxy Powder
LED Reflector	ABS Trivalent Chrome
Glass Cover	Heat-Resistance Tempered Glass

(*1) All the shown light distribution data is collected with below manner.

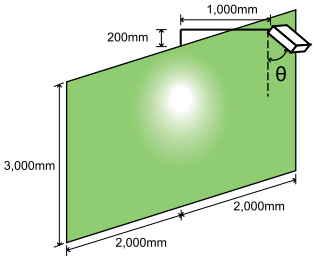

*Please note that product specifications may change without prior notice.
*Due to printing, the color tone of the product may appear different to the actual product.

Contact Us

Uses Nichia Corp. LED elements

ARISTO

(HQ/R&D/
Sales&Marketing)

ARISTO ENGINEERING PTE LTD
Blk 115A Commonwealth Drive
#01-17/20 Tanglin Halt Industrial Estate
Singapore 149596
URL http://www.aristo.com.sg
E-mail enquiries@aristo.com.sg