Hair Dryer

Elite Classic 2000 / Shaver 2000

The Elite range of hair dryer is quick and simple to install and maintenance free. Fast drying and absolutely safe for use. The Elite dryers are reliable, powerful and long lasting, making it ideal for your needs.

Features

- Self extingushing plastic material class VO-5V (UL 94)
- Permanent magnet motor type “Long Life”
- Heating element protected by thermostat and thermofuse
- Voltage – 230 - 240V 50/60 Hz
- 3 power levels – 600 - 850 - 1200W
- Air flow – 66 m^3/hr
- Noise – 68 db(A)
- Weight – Classic - 1.7 kg, Shaver - 2.25 kg
- Registered under Consumer Protection Scheme



Shaver 2000

Model with shaver socket, airflow and temperature regulator.



Classic 2000

Dimensions

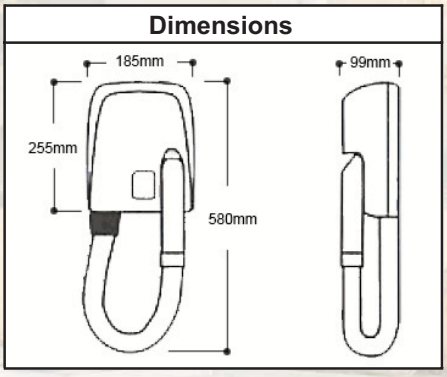

APPROVED IP24

Tamco Specialty Shop
277 Orchard Road
Specialists’ Shopping Centre
#03-43/44 Singapore 238858
Tel (65) 6734 6800
Fax (65) 6734 4257
showroom@tamcosystems.com.sg

Tamco Systems (Singapore) Pte Ltd
No. 5 Penjuru Close
Singapore 608600
Tel (65) 6862 3777
Fax (65) 6862 8628
sales@tamcosystems.com.sg

Tamco Systems (Malaysia) Sdn Bhd
No. 35 Persiaran Industri, Bandar Sri Damansara
52200 Kuala Lumpur, Malaysia
Tel (603) 6276 8732
Fax (603) 6272 1137
sales@tamcosystems.com.my

Tamco Systems (Hong Kong) Ltd
Unit 2, 33rd Floor, Cable TV Tower
9 Hoi Shing Road,
Tsuen Wan, New Territories, Hong Kong
Tel (852) 2833 6966
Fax (852) 2838 0724
sales@tamcosystems.com.hk

Tamco Systems Technology (Shanghai) Co., Ltd
Suite 503 Building B, 135 Futexi 1 Road
Waigaoqiao Free Trade Zone
Shanghai , P.R. China 200131
Tel (86) 21 5868 3858
Fax (86) 21 5868 3859
sales@tamcosystems.com.sg

TAMCO SYSTEMS

www.tamco-systems.com