Content

- Content.....P 1-1
- Foreword.....P 1-2
- Excellence.....P 1-3
- Product Feature.....P 1-4
- Product Certification.....P 1-5
- Electrical Characteristics of Low Voltage Busway.....P 1-8
- Product Specifications.....P 1-9
- Selection of Standard Parts (Low Voltage Series).....P 1-15
- Product Installation.....P 1-18
- Assembly Diagrams of Low Voltage Busway Junction.....P 1-19
- Low Voltage Busway Horizontal Hanger Standard.....P 1-20
- Low Voltage Busway Vertical Hanger Standard.....P 1-21
- Dimensions of Standard Terminal Elements for Low Voltage Busway.....P 1-22
- Dimensions of Standard Terminal Elements Copper Plate for Low Voltage Busway.....P 1-24
- Opening Requirement of Standard Terminal Elements and Switchgear for Low Voltage Busway...P 1-25
- Low Voltage Busway Terminal Element and Switchgear Standard Guidline.....P 1-26
- Low Voltage Busway Terminal Element and Generator Connection Standard.....P 1-27
- Plug-in Unit.....P 1-28
- Product Design Theory.....P 1-29
- Low Voltage Busway Routine Test Items.....P 1-30
- Projects Reference List.....P 1-31





Foreword

TAIAN-ETACOM TECHNOLOGY was formally called TAIAN Electric Co. Ltd. (Teco Group). With the drastic increase in the requirement of safety and stability for power distribution in the domestic hitech industry, commercial building, and public engineering. However the traditional power cable and metal-enclosure busway can no longer fulfill the requirement stated above.

Therefore, the team of Teco Group imported the world leading BUSWAY technology manufacturer, ETACOM betobar-r of Belgium, for the Taiwan market in1988.
The product has the excellent features of electrical characteristics and mechanical strength, fire and water proof, anti-corrosion, smaller size, and maintenance free.
All these features are better than the traditional metal-enclosure busway.
Therefore the cast resin busway are popularly used in the industry field.



Due to the delivery period of import goods are always too long to fulfill the needs of customers. Therefore,TAIAN and ETACOM were jointed as TAIAN-ETACOM in October 1999. Moreover, TAIAN-ETACOM introduced the producing technology of ETACOM betobar-r busway to provide the high quality,short delivery period and completely customer service.

We commit to provide the best completely services to our customers. We hope our customers keep giving us their support and encouragement. Your comment will be highly appreciated.



Excellence

1. Low voltage products meet the standard of IEC 60439-1、IEC 60439-2、IEC 61439、CNS 14286.
2. Compact, easy to install, no emission of toxic gas.
3. The purity of conductor is 99.9% for copper with conductivity above 98% IACS.
4. Voltage drop low、high short-circuit current withstand, carried out overload 20% for 2 hours.
5. Degree of protection tested in accordance with IEC 60529, IP68. Mechanical Impacts IK10.
6. Fire-proof property:
   At 750℃ for 3 hours tested in accordance with IEC 60331-21.
   At 840℃ for 30 minutes tested in accordance with CNS 14286.
7. Fire-proof wall partitions meet S120 in accordance with IEC 60332-3, and meet NBN 713-020 add3.
8. Fire-proof partitions in the piping in accordance with IEC 60332-3.
9. Anti-explosion certification meets EN 50028 no. EEx mⅡ.
10. Mixing excellent material such as non-organic volcanic rock with small amount of resin made of busway. With excellent insulation and heat dissipation properties.
11. Low EMC.
12. Insulation level of class B 130℃.
13. Products have shown excellent results for at least 40 years, and passed aging test with safety operation over 50 years.
14. Maintenance free.
15. CE and UL certified.

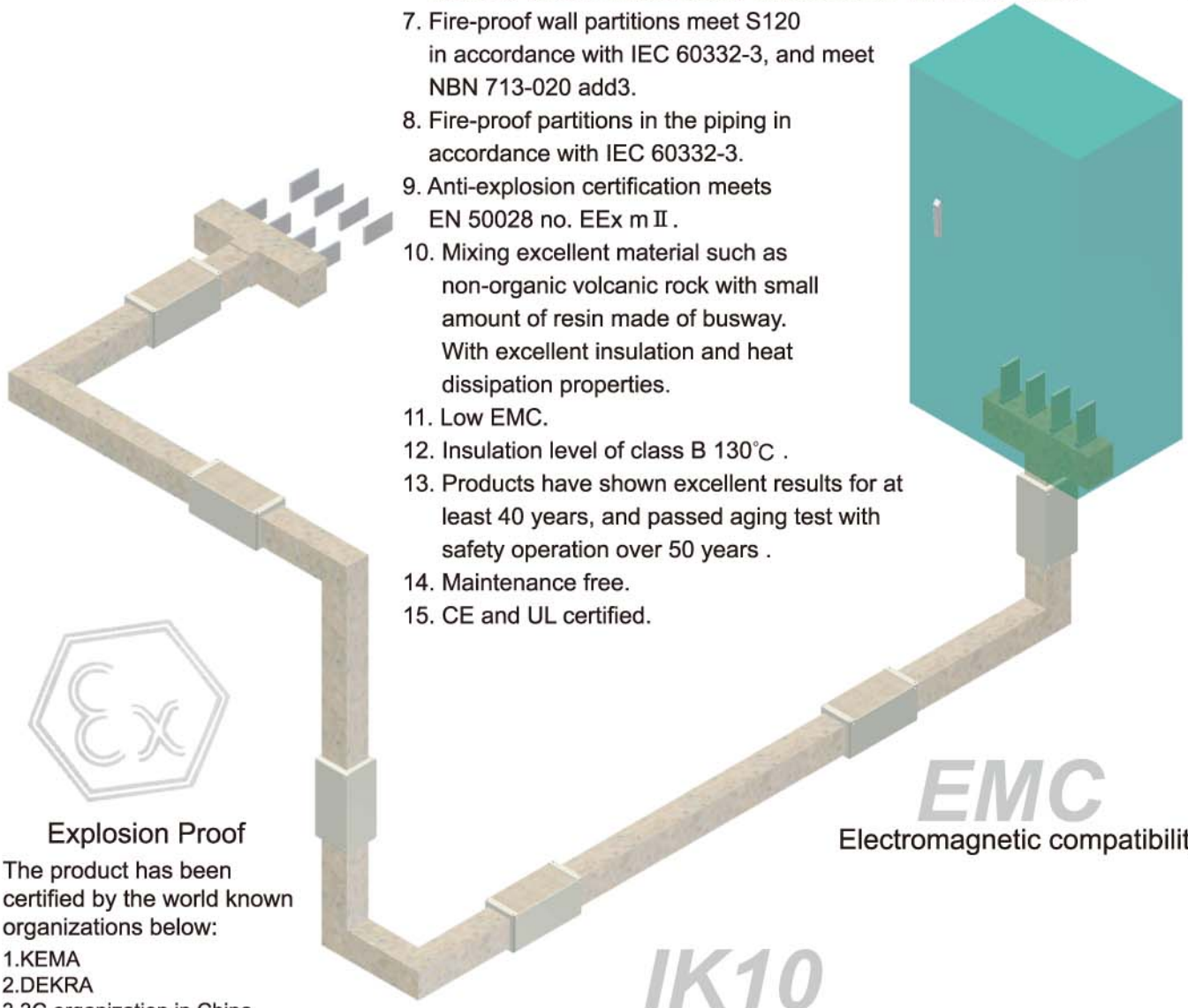

Explosion Proof

The product has been certified by the world known organizations below:

1.KEMA
2.DEKRA
3.3C organization in China.
4.Taiwan Electric Research & Testing Center.
5.Fireproof Lab. of National Cheng Kung University.

EMC
Electromagnetic compatibility

IK10
Mechanical Impacts

E30
Fire Proof

CNS 14286
Withstand Fire Test

IP68
Degree of protection

S120
Fire Partitions



Product Feature

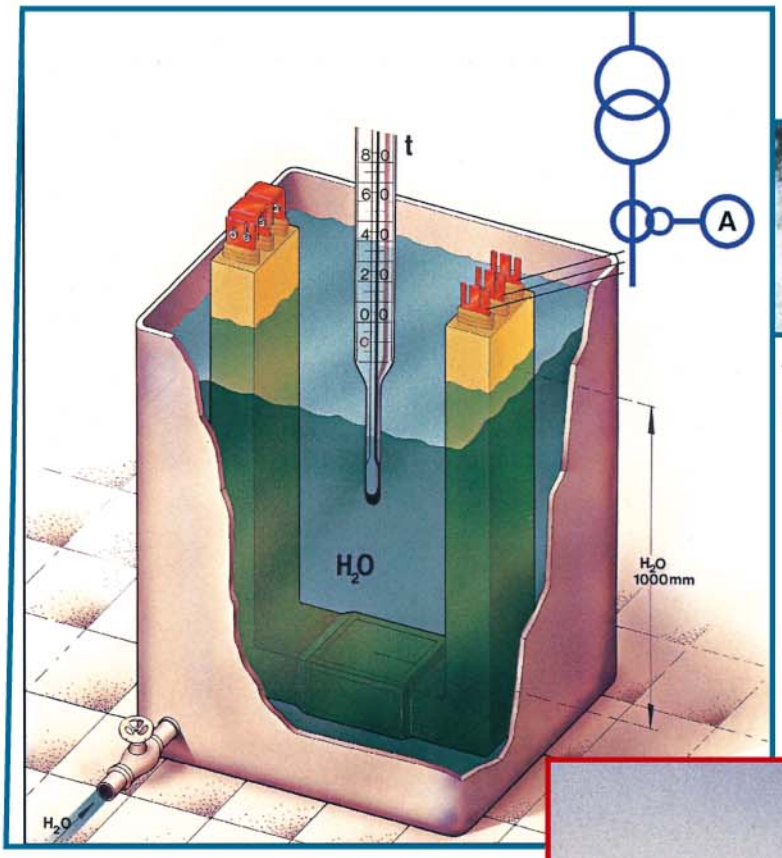



Waterproof

The water-proof tested (junction included) in accordance with IEC 60529 IP68.

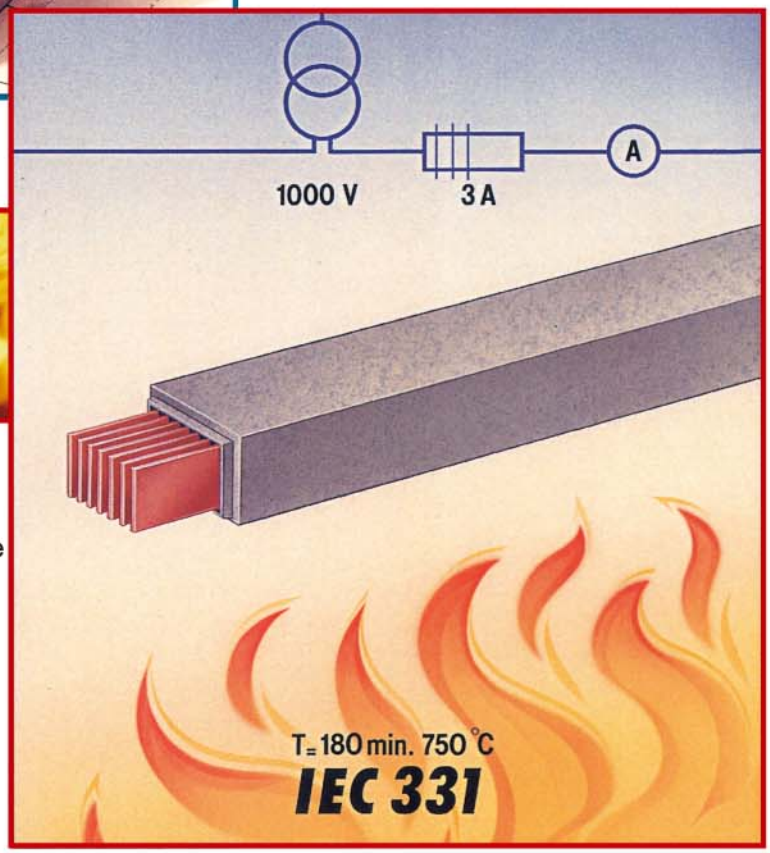



Fireproof

The fire-proof at 750°C for 3 hours tested in accordance with IEC 60331-21.
At 840°C for 30 minutes tested in accordance with CNS 14286 and JIS 8364.
At 950°C for 3 hours tested in accordance with BS 6387.



Product Certification



CERTIFICATE

Number: 61562

The management system of:

Taian-Etacom Technology Co., Ltd.
Taoyuan Hsien, Taiwan R.O.C.

including the implementation meets the requirements of the standard

ISO 9001:2008

Scope:
Design and Manufacture and Sales of TECOBAR (Cast-Resin Insulated Busway Systems)

Certificate expiry date: 1 February 2013
Certified for the first time: 1 February 2001
Certificate effective date: 1 February 2010

DEKRA Certification B.V.

drs. G.J. Zoetbrood
Managing Director

ing. H.J. Bellman
Certification Manager

ISO 9001:2008 certificate



TEST CERTIFICATE

KEMA Quality
TEST CERTIFICATE

Issued to: Taian-Etacom Technology Co. Ltd.
No. 158, Shin Jiang road
Yang-Mei Taoyuan County
Taiwan R.O.C.

For the product: low-voltage busbar trunking system

Trade name: TECOBAR

Type/Model: L818EC

Ratings: Ue 1000 V, Ui 1000 V, In 3269 / 3443 A at 60 Hz, Uimp 12 kV;
Icw 100 kA – 1,0 s 220 kA peak

Manufactured by: Taian-Etacom Technology Co. Ltd.
No. 158, Shin Jiang road
Yang-Mei Taoyuan County
Taiwan R.O.C.

Subject: Type tests

Requirements: IEC 60439-2, ed. 3.1 2000-10; Clauses: 8.2.1, 8.2.2, 8.2.3, 8.2.4, 8.2.5, 8.2.9, 8.2.10, 8.2.12 and 8.2.13

Remarks: Busbar trunking system consists of flange, joint and straight lengths, conductor material copper, cast-resin insulated

This Test Certificate is granted on account of an examination by DEKRA, the results of which are laid down in report no. 2144418.01-HNC, dated 30 October, 2011.

The examination has been carried out on one single specimen of the product, submitted by the manufacturer. The Attestation does not include an assessment of the manufacturer's production. Conformity of his production with the specimen tested by DEKRA is not the responsibility of DEKRA.

Arnhem, 30 October, 2011 Number: 2144418.100

DEKRA Certification B.V.

H.R.M. Barends
Certification Manager

KEMA type test certificate.



内政部消防安全設備審核認可書

内 政 部

Approval of safety appliances by National Fire Agency.



中国国家强制性产品认证证书

中国质量认证中心

Certified by China Quality Certification Center.



Product Certification



Underwriters Laboratories Taiwan Co., Ltd.

Commercial Inspection and Testing Services (CITS)

Testing Report

Client Name:	TAIAN-ETACOM TECHNOLOGY CO LTD	Testing Location:	Underwriters Laboratories Taiwan Co Ltd
Address:	7 FL 156-2 SUNG CHIANG RD.	Address:	1st Fl 260 Da-Yeh Road, Peitou
City, State, Zip	TAIPEI	City, State, Zip	Taipei
Contact:	MR. Shou-Lung Liang	Contact:	Clair Ting
Phone:	886-2-25221663	Phone:	886-2-2896-7750
Fax:	886-3-4783613	Fax:	886-2-2898-7432

Product Description: BIM INSULATION MATERIAL

Number of Samples Submitted: 20 pcs

Test Standard of Requirement: UL94 V

Test Results : As attachment

Comments: N/A

Fire withstand examined in accordance with UL 94V



行政院環境保護署

環境保護產品第二類產品證明書

茲據　安達康科技股份有限公司

申請環境保護產品第二類產品認證，經核相符，特予認證並摘錄認證事項如下：

一、廠商名稱：Taian-Etacon Technology

二、廠商地址：6F., No.156-1, Songjiang Rd., Zhongshan Dist., Taipei City 104, Taiwan (R.O.C.)

三、代表人姓名：Ming-Te, Hu

四、產品名稱：Cast-Resin Insulated Busway Systems Type LS

五、生產廠場：Taian-Etacon Technology, No.158, Yinjiang Rd., Yangmei City, Taoyuan County 320, Taiwan (R.O.C.)

六、產品用途：Distribution

七、環保特性：Saves Energy And Reduces Pollutions Caused By Mishandling Route As Electric Cable

八、有效期限：自中華民國九十九年九月二十八日起至中華民國一〇二年九月二十七日止

行政院環境保護署署長 沈世宏

Environmental Protection Administration, Executive Yuan, R.O.C. (Taiwan)

中華民國九十九年九月二十七日

（本證明僅供機關採購產品標證明用）

Green Mark



TEST REPORT N° 60058075-559042

DELIVERED TO :	TET N°158 SHIN ROAD 326 YANG-MEI TAOYUAN HSIEN TAIWAN ROC
SUBJECT :	Tested Product: POLYMER CONCRETE: Reference BIM-TW-GY253-07 ; On the basis of the LCIE 07 ATEX 0003U certified product

Date of the tests : July 20th, 2007 to December 4th, 2007

This document contains 12 pages

Appendix : C survey report Nr.315 622

Fontenay-aux-Roses, January 07th, 2008

The Technical Manager,
Name: David RAVEAU

Signed:

Test Report of LCIE
1) Light resistance tests.
2) Dielectric rigidity tests.
3) Electrostatic charge tests.



TECHNOLOGY SERVICES

LUL Technology Services
Fresh Fish House
Bolic Lane
Acton, London W3 8RP
Telephone: +44 (0)171 918 6403
Facsimile: +44 (0)171 918 6406

NAMAS TESTING No.0674

Report No. C10399

FIRE SAFETY ASSESSMENT OF BETOBAR-R BUSBAR SUPPLIED BY PIRELLI CONSTRUCTION

Prepared for: Mr. M. Payne
Pirelli Construction
PO Box 6, Leigh Road, Eastleigh, Hampshire, SO50 9YE

Issue Date: 19-Aug-1996

Reference: 6220-DJS-C10399-TSK14750

Prepared by: D.J.Songhurst

Signature:

Certified by: J.I.Uddoh

Signature:

© LUL Technology Services
Opinions and interpretations expressed herein are outside the scope of NAMAS accreditation

Low smoke and non-toxic gas examined by LUL

Product Certification



台灣大電力研究試驗中心

鑄聚匯流排
外殼防塵、防水（IP）保護等級測試報告

委 託 者：安達康科技股份有限公司
委託者地址：桃園縣楊梅鎮新江路 158 號
製 造 者：安達康科技股份有限公司
製造者地址：桃園縣楊梅鎮新江路 158 號
產品名稱：低壓匯流排
型　　號：LB16EC-9-960 (3150A)
外觀尺寸：長 1000 mm × 寬 168 mm × 深 200 mm
依據標準：IEC 60529 (2001-02)
測試程序：疏開自述
收件日期：92 年 09 月 29 日
測試日期：92 年 10 月 21 日
測試人員：鄧金台、陳勝輝
測試結果：低壓匯流排(型號：LB16EC-9-960 (3150A))外殼符合 IP68 等級，測試結果參考第二頁。

大電力研究試驗中心
試驗部經理

IP68 certified in accordance with IEC 60529.

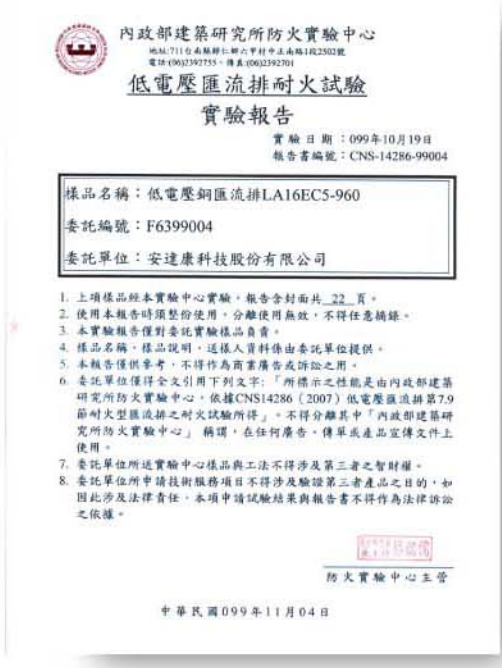

內政部建築研究所防火實驗中心
地址:711台南縣歸仁鄉六甲村中正南路1段2503號
電話:(06)2397755，傳真:(06)2392701

低電壓匯流排耐火試驗
實驗報告

實驗日期：099年10月19日
報告書編號：CNS-14286-99004

樣品名稱：低電壓銅匯流排LA16EC5-960
委託編號：F6399004
委託單位：安達康科技股份有限公司

1. 上項樣品經本實驗中心實驗，報告含封面共 22 頁。
2. 使用本報告時須整份使用，分離使用無效，不得任意摘錄。
3. 本實驗報告僅對委託實驗樣品負責。
4. 樣品名稱、樣品說明，送樣人資料係由委託單位提供。
5. 本報告僅供參考，不得作為商業廣告或訴訟之用。
6. 委託單位僅得全文引用下列文字：「所標示之性能是由內政部建築研究所防火實驗中心，依據CNS14286（2007）低電壓匯流排第7.9節耐火型匯流排之耐火試驗所得」。不得分離其中「內政部建築研究所防火實驗中心」 稱謂，在任何廣告、傳單或產品宣傳文件上使用。
7. 委託單位所送實驗中心樣品與工法不得涉及第三者之智財權。
8. 委託單位所申請技術服務項目不得涉及驗證第三者產品之目的，如因此涉及法律責任，本項申請試驗結果與報告書不得作為法律訴訟之依據。

防火實驗中心主管

中華民國099年11月04日

Fire proof examined in accordance with CNS 14286 840°C for 30 minutes.



財團法人國家實驗研究院
國家地震工程研究中心
National Center for Research on Earthquake Engineering

TAF Testing Laboratory 1451

地震模擬振動台
測試報告

測試報告編號：T07004
測試報告日期：2007 年 4 月 17 日

測試名稱：全模鑄式匯流排 0.8G 三軸向地震模擬試驗
測試件：匯流排 （型號：LA Type /LB Type 序號:N/A)
送測單位：安達康科技股份有限公司
桃園縣楊梅鎮新江路 158 號
03-488-3786

上述設備經本實驗室測試，結果如內文所述。

本報告合計頁共 4 頁，分離使用無效。

國家地震工程研究中心主任

National Center for Research on Earthquake Engineering-0.8g in 3 - axis sesmic simulation test.

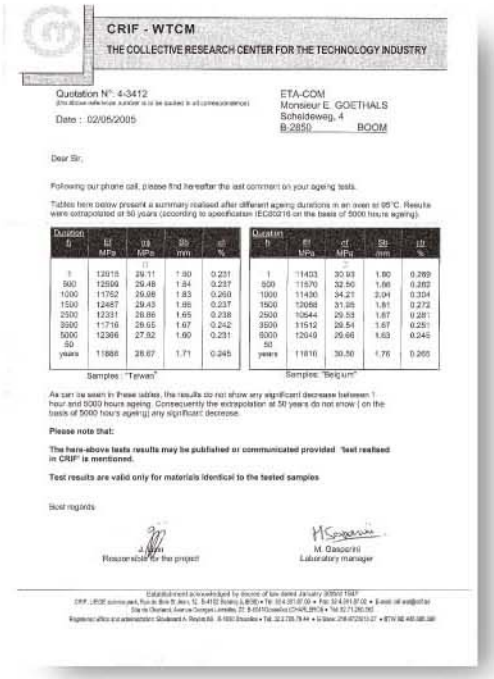

CRIF - WTCM
THE COLLECTIVE RESEARCH CENTER FOR THE TECHNOLOGY INDUSTRY

Quotation N°: 4-3412
Date : 02/05/2005

ETA-COM
Monsieur E. GOETHALS
Scheldeweg, 4
B-2850 BOOM

Dear Sir,

Following our phone call, please find hereafter the last comment on your ageing tests.

Tables here below present a summary realised after different ageing durations in an oven at 95°C. Results were extrapolated at 50 years (according to specification IEC60216 on the basis of 5000 hours ageing).

Duration h	Ea MPa	Ia MPa	Ib mm	Ic %
1	12015	29.11	1.80	0.231
500	12599	29.48	1.84	0.237
1000	11752	29.98	1.83	0.269
1500	12487	29.43	1.86	0.237
2500	12351	28.86	1.65	0.238
3500	11716	28.55	1.67	0.242
5000	12366	27.92	1.60	0.231
50 years	11868	26.67	1.71	0.245

Samples : "Taiwan"

Duration h	Ea MPa	Ia MPa	Ib mm	Ic %
1	11403	30.93	1.80	0.269
500	11570	32.50	1.86	0.262
1000	11430	34.21	2.04	0.304
1500	12068	31.85	1.81	0.272
2500	10544	29.53	1.67	0.281
3500	11512	28.54	1.67	0.251
5000	12049	29.66	1.63	0.246
50 years	11816	30.50	1.76	0.265

Samples: "Belgium"

As can be seen in these tables, the results do not show any significant decrease between 1 hour and 5000 hours ageing. Consequently the extrapolation at 50 years do not know (on the basis of 5000 hours ageing) any significant decrease.

Please note that:

The here-above tests results may be published or communicated provided 'test realised in CRIF' is mentioned.

Test results are valid only for materials identical to the tested samples

Best regards

J. Wynn
Responsible for the project

M. Gasparini
Laboratory manager

Aging test report.



1. Title:TECOBAR Low Voltage Cast-Resin Insulated Busway.

2. Product Description:

TECOBAR Low Voltage Cast-Resin Insulated Busway is developed for electrical systems below 1kV. The product has features of safety and compact. It is designed to use the insulation material to perform cast resin sealing to the copper (aluminium) conductor. The insulation material is cast resin which contains non-organic volcanic rock with the features of excellent insulation characteristics, mechanical strengh, humidity-proof, non-combustible, and self-extinguishing .

3. Applicable Scope:

TECOBAR busway is manufactured in accordance with IEC 60439-1, IEC 60439-2, IEC 61439 and CNS 14286. The elements included as below:

3.1 Straight elements, elbow elements, geometrical shape elements, phase-switch elements, expansion elements, transfer elements, split elements and terminal elements.

3.2 Distribution unit: There are fixed type take-off unit and draw-out type plug-in unit.

＊ Note: The plug-in leads shall be reserved in advance. Therefore, the number of plug-in unit shall be confirmed while purchase.

4.Condition of Use:

TECOBAR busway is composed of the elements listed in item 3.1. The elements are connected through junction units on site before cast molding with insulation mix to complete the low voltage busway.

Conditions for TECOBAR:

4.1 Altitude: below 2000m, indoor and outdoor site.

4.2 Ambient temperature: -45°C~65°C

4.3 Ambient humidity: 0%~100%

5. Technical Specifications:

5.1 Rated Voltage V : AC1000V.

5.2 Rated Current A : 419A~8421A.

5.3 Frequency Hz : 50/60.

5.4 System : 3Φ3w, 3Φ4w, 3Φ3w+1/2G, 3Φ3W+G, 3Φ4W+1/2G, 3Φ4W+G.

5.5 Conductor Material : Copper (E-Cu57) and Aluminum.

Purity : 99.9% Conductivity : Above 98% IACS.

According to standards : JIS H3140 , DIN 1787, DIN 1759, DIN 40500.

5.6 Electrical characteristics of each TECOBAR element (less than 4m)

Insulation capabilities : ◎ AC voltage withstand phase to phase is AC 5kV/1min.

◎ Insulation resistance phase to phase is ≧ 2GΩ/DC 1kV.

Fireproof : ◎ In accordance with CNS 14286 at 840°C for 30 minutes.

◎ In accordance with IEC 60331-21 at 750°C for 3 hours.

◎ In accordance with BS 6387 950°C for 3 hours.

Protection degree : ◎ In accordance with IEC 60529 IP68.

Mechanical impacts : ◎ In accordance with IEC 62262 IK10.

Grounding : ◎ Internal grounding for TECOBAR busway system.



Copper

Type	Single Line								Double Lines		
Model	LA02EC	LA04EC	LA04EC	LA08EC	LA08EC	LA12EC	LA16EC	LA16EC	LA08DC	LA12DC	LA16DC
Conductor Section(mm^2)	80	160	240	320	400	600	800	960	960	1440	1920
Conductor Dimensions (mm)	w20xt4	w40xt4	w40xt6	w80xt4	w80xt5	w120xt5	w160xt5	w160xt6	2-w80xt6	2-w120xt6	2-w160xt6

Conductor Material	purity copper 99.9% , above 98% IACS										
Rated Current A (35/40 ℃)	419	713	874	1127	1263	1622	2008	2221	2624	3442	4202
Rated Voltage V	1000										
Frequency Hz	50/60										

Electrical Characteristics											
R at 20 ℃ μΩ / m	209.0	108.3	72.1	54.1	43.3	28.9	21.7	18.8	18.1	12.1	10.2
R at 90 ℃ μΩ / m	253.9	142.1	94.6	69.3	55.2	39.3	29.5	24.1	24.2	16.6	12.7
X μΩ / m f:60Hz	98.4	89.6	86.6	74.1	73.2	58.9	46.4	45.7	43.9	35.8	28.2
Icw kA / 1Sec	15	28	40	50	50	65	80	80	100	120	120
Ipeak	65	84	84	110	110	143	176	176	220	264	264
P_{loss} W / m	134	217	217	264	264	310	357	357	500	590	683
IP/IK	IP68/IK10										

※Technical specifications may change without any further notice.

Product Dimensions (mm)

Fig.1 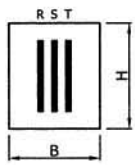

Fig.2 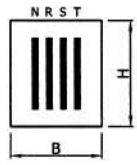

Fig.3 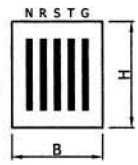

Fig.4 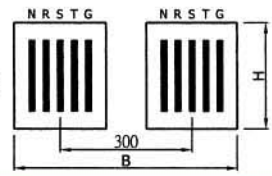

	Width (B) / Height (H)										
3Φ3W (Fig.1)	104/60	104/80	104/80	104/120	104/120	104/160	104/200	104/200	404/120	404/160	404/200
3Φ4W 3Φ3W+G (Fig.2)											
3Φ4W+G (Fig.3,Fig.4)											

	Weight kg / m										
Product Weight	13.8	20.3	23.3	33.5	35.7	50.2	64.4	71.5	78.6	111.0	143.0

※ Conductor : 3Φ3W represents R S T three phases, three wires
3Φ4W represents NRST three phases, four wires.
G represents grounding phase 100% of rated current.

※ Please refer to the temperature correction coefficient of rated current on page 1-29 while ambient temperature exceeds 40℃.



Copper

Type	Single Line				Double Lines			
Model	LB08EC	LB12EC	LB16EC	LB16EC	LB08DC	LB12DC	LB16DC	LB16DC
Conductor Section(mm^2)	800	1200	1600	1920	1600	2400	3200	3840
Conductor Dimensions (mm)	2-w80xt5	2-w120xt5	2-w160xt5	2-w160xt6	4-w80xt5	4-w120xt5	4-w160xt5	4-w160xt6
Conductor Material	purity copper 99.9% , above 98% IACS							
Rated Current A (35/40 ℃)	2096	2724	3291	3443	4012	5222	6309	6569
Rated Voltage V	1000							
Frequency Hz	50/60							
Electrical Characteristics								
R at 20 ℃ μΩ / m	21.7	14.4	10.8	9.0	10.9	7.2	5.4	4.8
R at 90 ℃ μΩ / m	27.0	18.2	14.0	12.8	14.1	9.4	8.4	7.7
X μΩ / m f:60Hz	33.5	27.2	21.2	20.8	25.9	21.0	16.4	16.1
Icw kA / 1Sec	80	100	100	100	120	120	120	120
Ipeak	176	220	220	220	264	264	264	264
P_{loss} W / m	356	405	455	455	681	769	997	997
IP/IK	IP68/IK10							

※Technical specifications may change without any further notice.

Product Dimensions (mm)

Fig.1

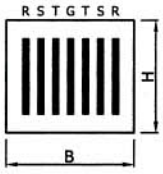

Fig.2

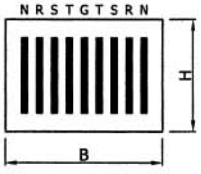

Fig.3

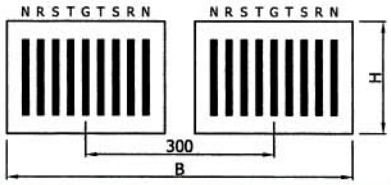

	Width (B) / Height (H)							
3Φ3W+1/2G (Fig.1)								
3Φ4W+1/2G (Fig.2,Fig.3)	168/120	168/160	168/200	168/200	468/120	468/160	468/200	468/200

	Weight kg / m							
Product Weight	55.1	86.5	111.5	122.0	110.2	173.0	223.0	244.0

※ Conductor : 3Φ3W represents R S T three phases, three wires.
3Φ4W represents NRST three phases, four wires.
1/2G represents grounding phase 50% of rated current.

※ Please refer to the temperature correction coefficient of rated current on page 1-29 while ambient temperature exceeds 40℃.



Aluminum

Type	Single Line						Double Lines		
Model	LA04EA	LA04EA	LA08EA	LA08EA	LA12EA	LA16EA	LA08DA	LA12DA	LA16DA
Conductor Section(mm^2)	160	240	320	480	600	960	960	1440	1920
Conductor Dimensions (mm)	w40xt4	w40xt6	w80xt4	w80xt6	w120xt5	w160xt6	2-w80xt6	2-w120xt6	2-w160xt6

Conductor Material	AL:1070								
Rated Current A (35/40 ℃)	560	686	870	1066	1290	1749	2021	2724	3349
Rated Voltage V	1000								
Frequency Hz	50/60								

Electrical Characteristics									
R at 20 ℃ $\mu\Omega$ / m	176.9	117.9	88.4	58.9	47.2	29.5	29.5	19.7	14.7
R at 90 ℃ $\mu\Omega$ / m	230.9	153.8	116.4	77.5	62.1	38.9	40.8	26.5	20.3
X $\mu\Omega$ / m f:60Hz	89.6	86.5	74.1	72.4	58.9	45.7	43.9	35.8	28.2
Icw kA / 1Sec	15	25	30	50	65	80	100	120	120
Ipeak	84	84	110	110	143	176	220	264	264
P_{loss} W / m	217	217	264	264	310	357	500	590	683
IP/IK	IP68/IK10								

※Technical specifications may change without any further notice.

Product Dimensions (mm)

Fig.1

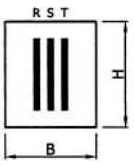

Fig.2

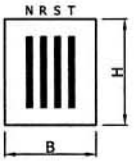

Fig.3

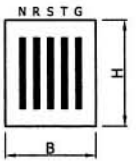

Fig.4

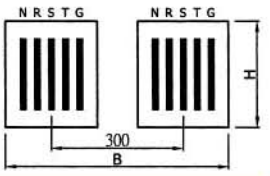

Width (B) / Height (H)								
3Φ3W (Fig.1)	104/80	104/120	104/160	104/200	404/120	404/160	404/200	
3Φ4W (Fig.2)								
3Φ3W+G (Fig.2)								
3Φ4W+G (Fig.3,Fig.4)								

Weight kg / m									
Product Weight	15.3	15.8	23.3	24.4	31.1	41.3	48.8	65.4	82.6

※ Conductor : 3Φ3W represents R S T three phases, three wires.
3Φ4W represents NRST three phases, four wires.
G represents grounding phase 100% of rated current.

※ Please refer to the temperature correction coefficient of rated current on page 1-29 while ambient temperature exceeds 40℃.



Aluminum

Type	Single Line		Double Lines		
Model	LB12EA	LB16EA	LB08DA	LB12DA	LB16DA
Conductor Section(mm^2)	1200	1600	1920	2400	3840
Conductor Dimensions (mm)	2-w120xt5	2-w160xt5	4-w80xt6	4-w120xt5	4-w160xt6
Conductor Material	AL:1070				
Rated Current A (35/40 ℃)	2094	2574	3395	4015	5375
Rated Voltage V	1000				
Frequency Hz	50/60				
Electrical Characteristics					
R at 20 ℃ μΩ / m	23.5	17.7	14.7	11.8	7.4
R at 90 ℃ μΩ / m	30.8	22.9	19.7	15.9	11.5
X μΩ / m f:60Hz	27.2	21.2	25.5	21.0	16.1
Icw kA / 1Sec	100	100	120	120	120
Ipeak	220	220	264	264	264
P_{loss} W / m	405	455	681	769	997
IP/IK	IP68/IK10				

※Technical specifications may change without any further notice.

Product Dimensions (mm)

Fig.1

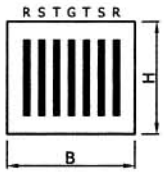

Fig.2

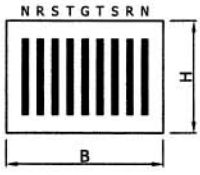

Fig.3

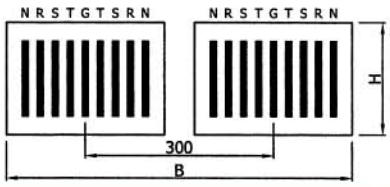

Width (B) / Height (H)					
3Φ3W+1/2G(Fig.1)	168/160	168/200	468/120	468/160	468/200
3Φ4W+1/2G (Fig.2 Fig.3)					

Weight kg / m					
Product Weight	53.5	63.6	79.0	101.1	135.0

※ Conductor : 3Φ3W represents R S T three phases, three wires.
3Φ4W represents NRST three phases, four wires.
1/2G represents grounding phases 50% of rated current.

※ Please refer to the temperature correction coefficient of rated current on page 1-29 while ambient temperature exceeds 40℃.



Copper

Type	Single Line					Double Lines				
Model	NLV16	NLV16	NLV20	NLV20	NLV24	NLV16-D	NLV20-D	NLV24-D	NLV24-D	NLV24-D
Conductor Section(mm^2)	640	800	1000	1200	1440	1600	2000	2400	2880	3120
Conductor Dimensions (mm)	w160xt4	w160xt5	w200xt5	w200xt6	w240xt6	2-w160xt5	2-w200xt5	2-w240xt5	2-w240xt6	2-w240xt6.5

Conductor Material	purity copper 99.9% , above 98% IACS									
Rated Current A (35/40 ℃)	2454	2732	3357	3665	4225	5309	6350	7422	8122	8421
Rated Voltage V	1000									
Frequency Hz	50/60									

Electrical Characteristics										
R at 20 ℃ μΩ / m	27.2	21.7	17.3	14.4	12.0	10.8	8.7	7.2	6.0	5.5
R at 90 ℃ μΩ / m	36.8	29.7	23.6	19.8	16.9	15.4	12.4	10.3	8.6	8.0
X μΩ / m f:60Hz	82.3	81.8	57.8	57.4	30.3	43.1	30.9	16.1	15.9	15.6
Icw kA / 1Sec	100	100	120	120	120	120	120	120	120	120
Ipeak	220	220	264	264	264	264	264	264	264	264
P_{loss} W / m	665	665	798	798	905	1302	1500	1702	1702	1702
IP/IK	IP68/IK10									

※Technical specifications may change without any further notice.

Product Dimensions (mm)

Fig.1

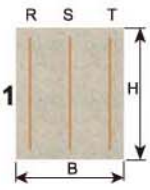

Fig.2



Fig.3



Fig.4

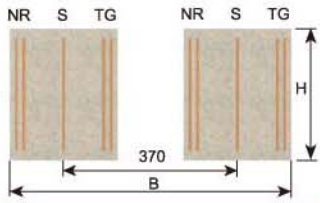

	Width (B) / Height (H)					
3Φ3W(Fig.1)	230/200	230/240	230/280	600/200	600/240	600/280
3Φ4W (Fig.2)						
3Φ4W+G(Fig.3 Fig.4)						

	Weight kg / m									
Product Weight	74.3	91.8	111.6	120.8	162.1	183.6	223.8	302.9	324.2	334.9

※The heat dissipation openings of this series of TECOBAR are unique design patent.
This series have granted the patent certificate by Taiwan and China.

※ Conductor : 3Φ3W represents R S T three phase, three wires.
3Φ4W represents NRST three phases, four wires.
G represents grounding phase 100% of rated current.

※ Please refer to the temperature correction coefficient of rated current on page 1-29 while ambient temperature exceeds 40℃.



Product Specifications NLV

Type	Single Line				Double Lines		
Model	NLV16A	NLV16A	NLV20A	NLV24A	NLV16-DA	NLV20-DA	NLV24-DA
Conductor Section(mm^2)	640	800	1000	1440	1600	2400	2880
Conductor Dimensions (mm)	w160xt4	w160xt5	w200xt5	w240xt6	2-w160xt5	2-w200xt6	2-w240xt6
Conductor Material	AL:1070						
Rated Current A (35/40 ℃)	1847	2065	2515	3205	4003	5245	6090
Rated Voltage V	1000V						
Frequency Hz	50/60						
Electrical Characteristics							
R at 20 ℃ μΩ / m	44.2	35.4	28.3	19.7	17.7	11.8	9.8
R at 90 ℃ μΩ / m	58.6	46.9	37.9	26.5	25.1	16.4	13.8
X μΩ / m f:60Hz	82.3	81.8	57.8	30.3	43.1	30.2	15.9
Icw kA / 1Sec	65	80	120	120	120	120	120
Ipeak	220	220	264	264	264	264	264
P_{loss} W / m	600	600	720	817	1175	1354	1536
IP/IK	IP68/IK10						

※Technical specifications may change without any further notice.

Product Dimensions (mm)

Fig.1



Fig.2



Fig.3

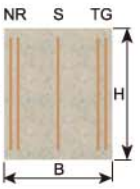

Fig.4

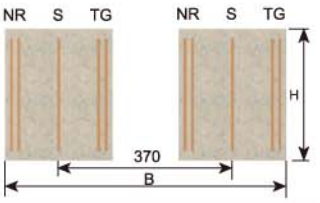

Width (B) / Height (H)						
3Φ3W (Fig.1)	230/200	230/240	230/280	600/200	600/240	600/280
3Φ4W (Fig.2)						
3Φ4W+G(Fig.3 Fig.4)						

Weight kg / m							
Product Weight	54.5	67.1	80.7	117.6	134.2	167.4	235.2

※The heat dissipation openings of this series of TECOBAR are unique design patent.
This series have granted the patent certificate by Taiwan and China.

※ Conductor : 3Φ3W represents R S T three phases, three wires.
3Φ4W represents NRST three phases, four wires.
G represents grounding phases 100% of rated current.

※ Please refer to the temperature correction coefficient of rated current on page 1-29 while ambient temperature exceeds 40℃.



Selection of Standard Parts

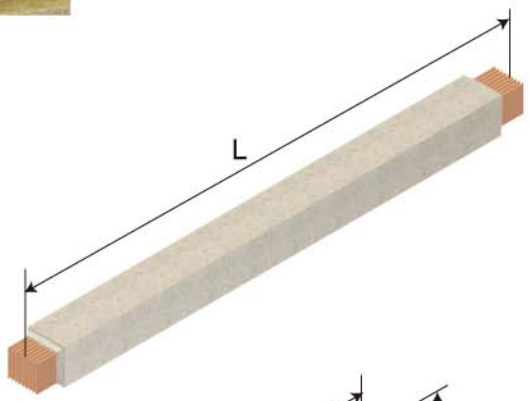

Straight Element

Model	Length
RE	L=1000mm、2000mm 3000mm、4000mm

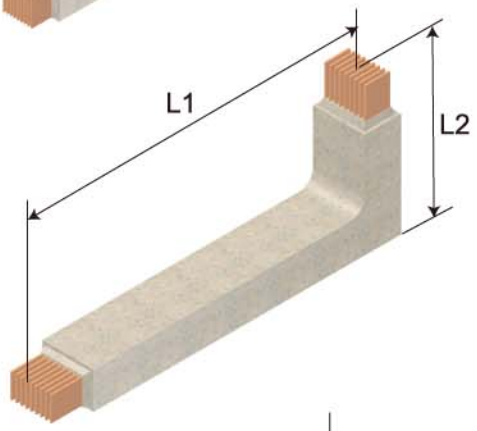

Brazed Elbow Element

Model	Length
HL1	L1+L2=1000mm
HL2	L1+L2=2000mm
HL1	L1=650mm L2=350mm

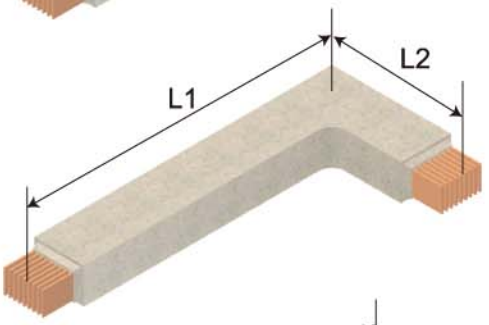

Bent Elbow Element

Model	Length
HB1	L1+L2=1000mm
HB2	L1+L2=2000mm
HB1	L1=650mm L2=350mm

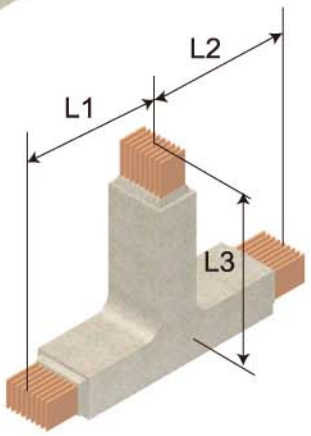

Brazed T- Element

Model	Length
TL2	L1=L2=L3=350mm

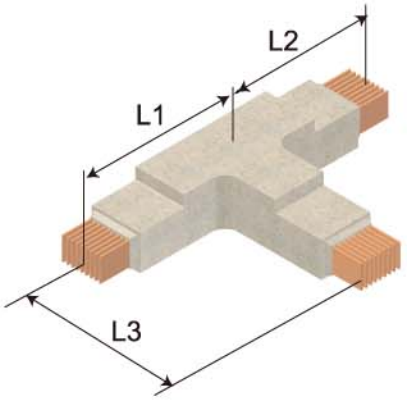

Bent T- Element

Model	Length
TB2	L1=L2=L3=500mm



Selection of Standard Parts

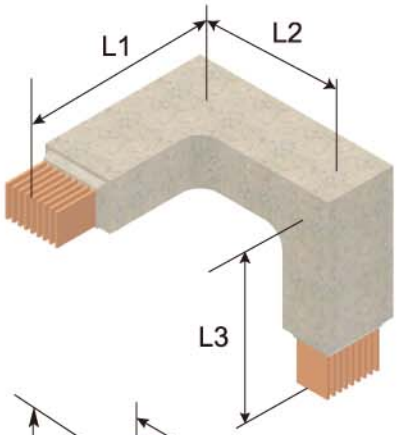

Double Elbow Element Right

Model	Length
XR1	L1+L2+L3=1000mm
XR2	L1+L2+L3=2000mm
	L1=L3=350mm
	L2≧701mm， HB+HL applied

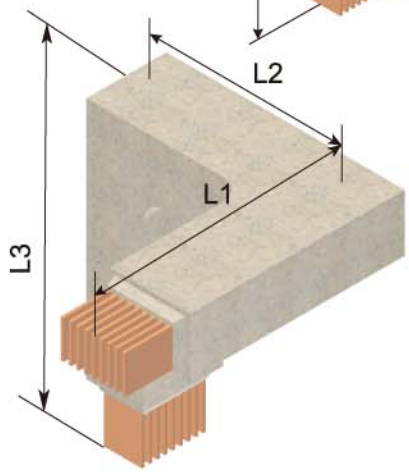

Double Elbow Element Left

Model	Length
XL1	L1+L2+L3=1000mm
XL2	L1+L2+L3=2000mm
	L1=L3=350mm
	L2≧701mm， HB+HL applied

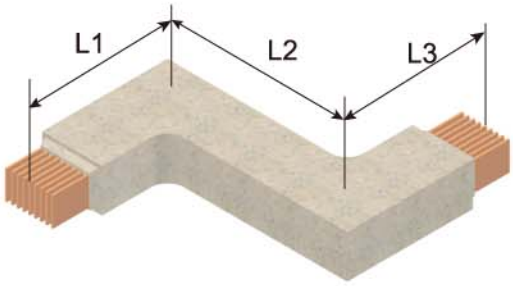

Bent Z- Element

Model	Length
ZB1	L1+L2+L3=1000mm
ZB2	L1+L2+L3=2000mm
	L1=L3=350mm

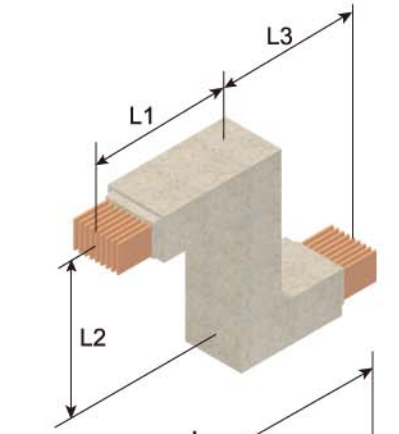

Brazed Z- Element

Model	Length
ZL1	L1+L2+L3=1000mm
ZL2	L1+L2+L3=2000mm
	L1=L3=350mm

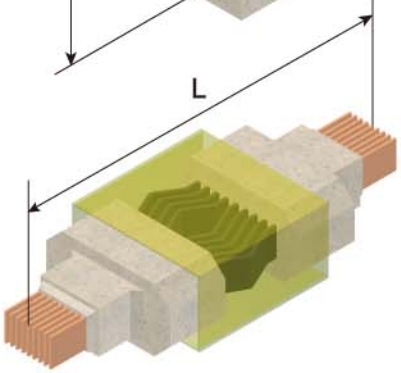

Expansion Element

Model	Length
EX	L=1000mm (fixed size)



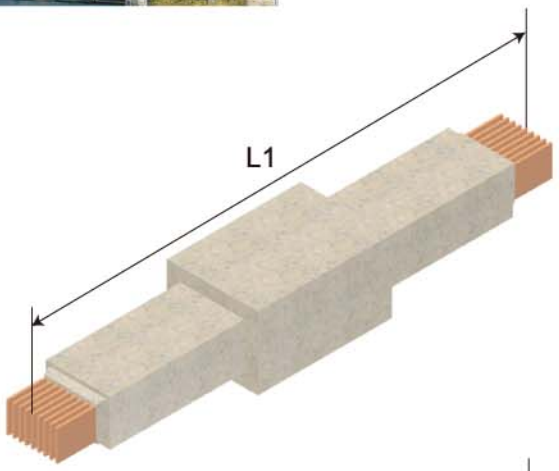

Phase Switch Element

Model	Length
PC1	L1=1200mm

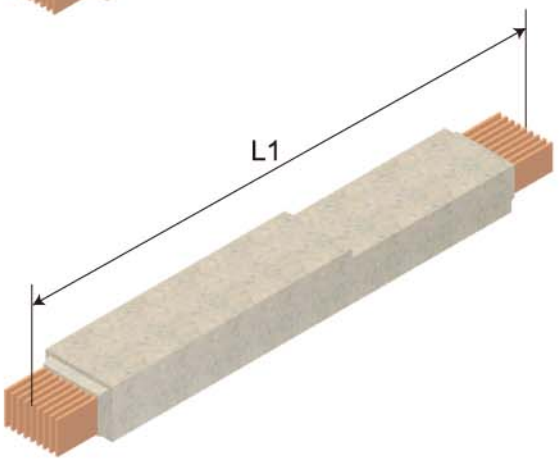

Transfer Element

Model	Length
TF1	L1=1200mm

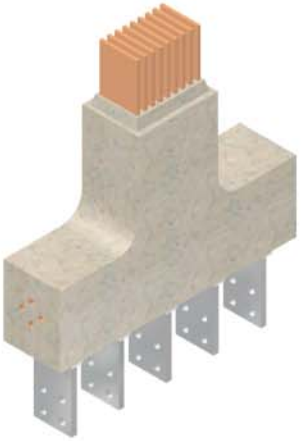

AG Type Terminal Element

Model	Length
AG1	Refer to 1-22

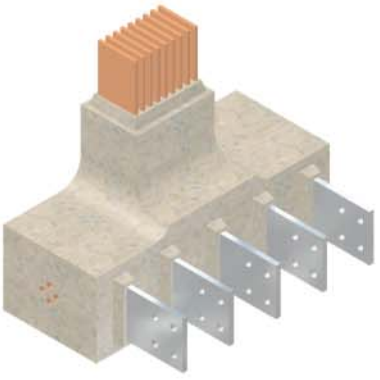

AO Type Terminal Element

Model	Length
AO1	Refer to 1-23



Product Installation

Unit:mm

Type	External Size	Limit of Hanger Installation Pitch A		Minimum pitch between busway	
	B×H	Horizontal Installation	Vertical Installation	Layout of Busway arrangement 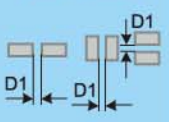	Distance between opening and busway 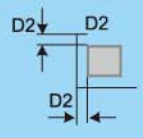
LA02	104×60	2000	4000	140	60
LA04	104×80				
LA08	104×120				
LA12	104×160				
LA16	104×200				
LB04	168×80				
LB08	168×120				
LB12	168×160				
LB16	168×200				
NLV16	230×200				
NLV20	230×240				
NLV24	230×280				

Note:Distance between hangers and busway are allowed to be adjusted on site while required.

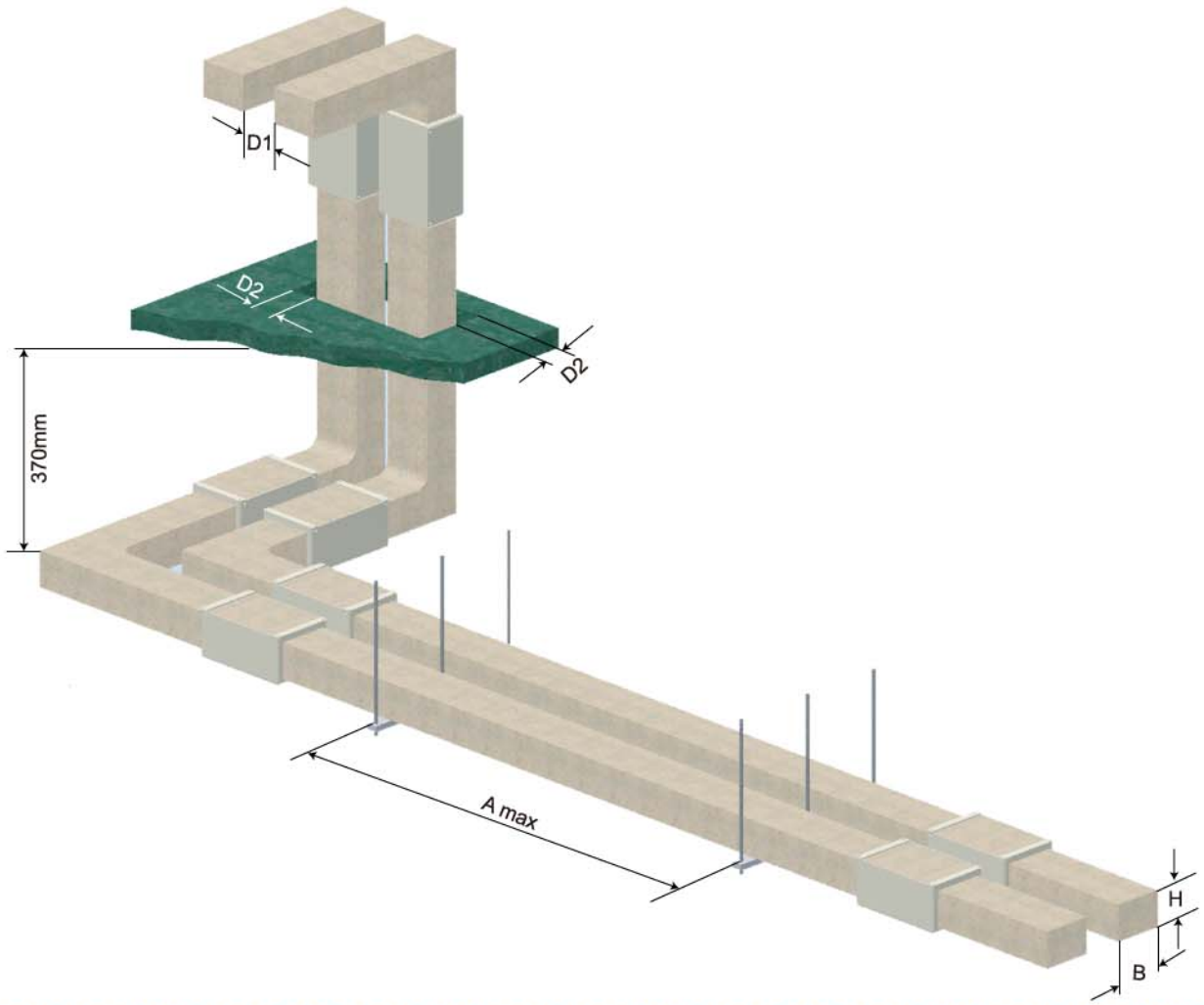





► Distance between two elements are within 20mm (inclusive). The distance can be flexibly adjusted on site by the requirement of construction.



► Illustration of JUNCTION assembly.



► The assembly bolt of Junction must be secured by torque wrench.

Method of cast-resin work on-site.

Refer to installation guide for casting method on site

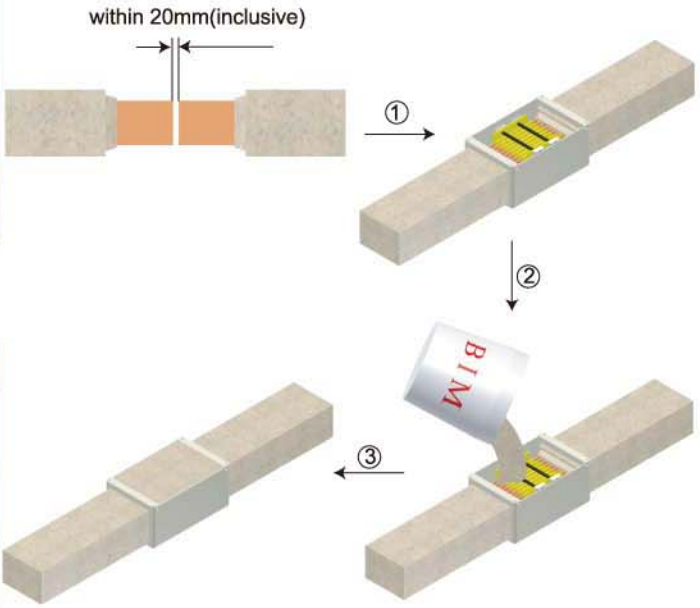

Torque of bolt during work:

Specs	M10	M12
Torque value (N-m) for Cu	43	74
Torque value (N-m) for Al	30	60

Illustration of cast-resin after completion.



Assembly Diagrams of Low Voltage Busway Junction



Low Voltage Busway Horizontal Hanger Standard

Unit:mm

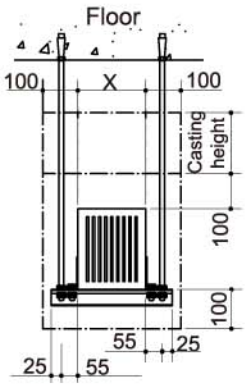

Cross-sectional Diagram of Single-Busway

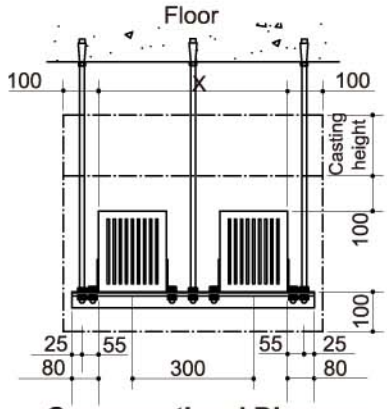

Cross-sectional Diagram of Dual-BusBusway

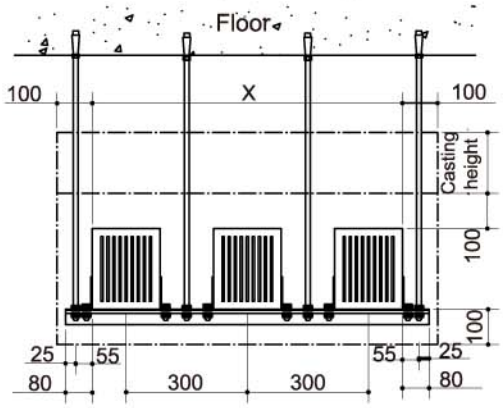

Cross-sectional Diagram of Triple-Busway

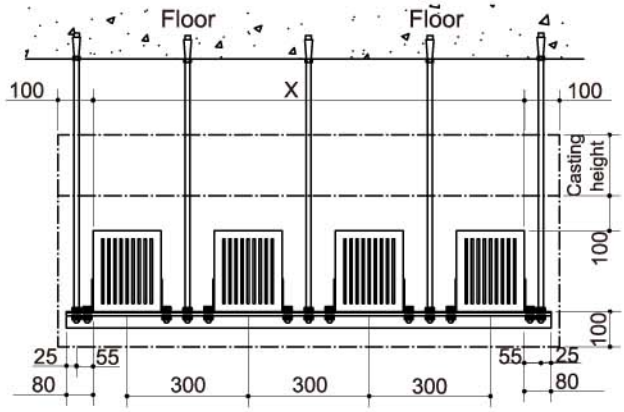

Cross-sectional Diagram of Quadruple-Busway

Side view

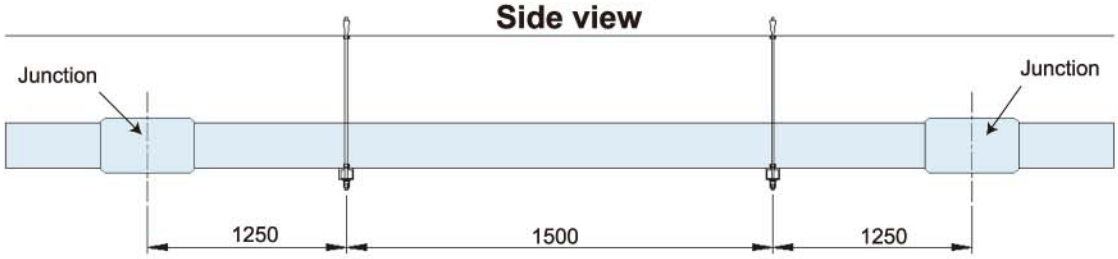

1. The installation pitch between each hanger has to comply with the standard as above. If the work condition can not meet the standard, it may be adjusted according to the condition on site. However, it must meet the requirement described in page 18 of the installation guide: minimum pitch requirement of the busway.
2. The space required for installing busway is shown in the diagram. The safety space above the busway should have 100mm + casting height of 270mm = 370 mm for clearance standard of installation space. In addition, the height of the floor should be within 5m above the ground to allow expansion of bolts, full-thread bolts, and channel, etc. to install at the bottom of the floor.
3. The installation distance of the hanger and corner iron should be in accordance with "x" dimension of busway and dimension listed in the diagram.
4. One set of L-shape stopping plate part.

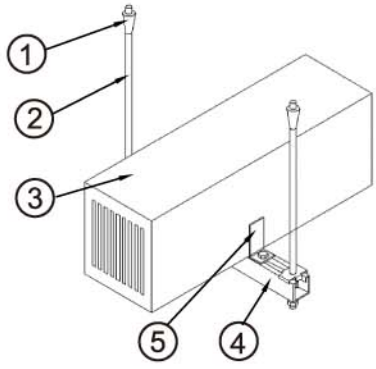

No.	Name of Part	Specs	Remark
①	Inner thread inflated screws	1/2"*2"	Zinc-plated item. (Included in installation work)
②	Full thread bolts	1/2"	Zinc-plated item. (Included in installation work)
③	Busway		TECOBAR
④	Channel	2t*41*41mm	Zinc-plated item. (Included in installation work)
⑤	L-shape stopping plate	2.3t*80*40	Zinc-plated item.



Vertical Hanger Units			
No.	Name of Part	Specs	Remark
①	Spring Box	-	Zinc-plated item.
②	Upper bolts	M12withN，W，SW	Zinc-plated item.
③	Under bolts	M12withN，W，SW	Zinc-plated item.
④	Channel	100x50x5t	Zinc-plated item. (Included in installation work)
⑤	Inflated Screws	1/2"	Zinc-plated item. (Included in installation work)

※The selection of spring box is according to different busway type.

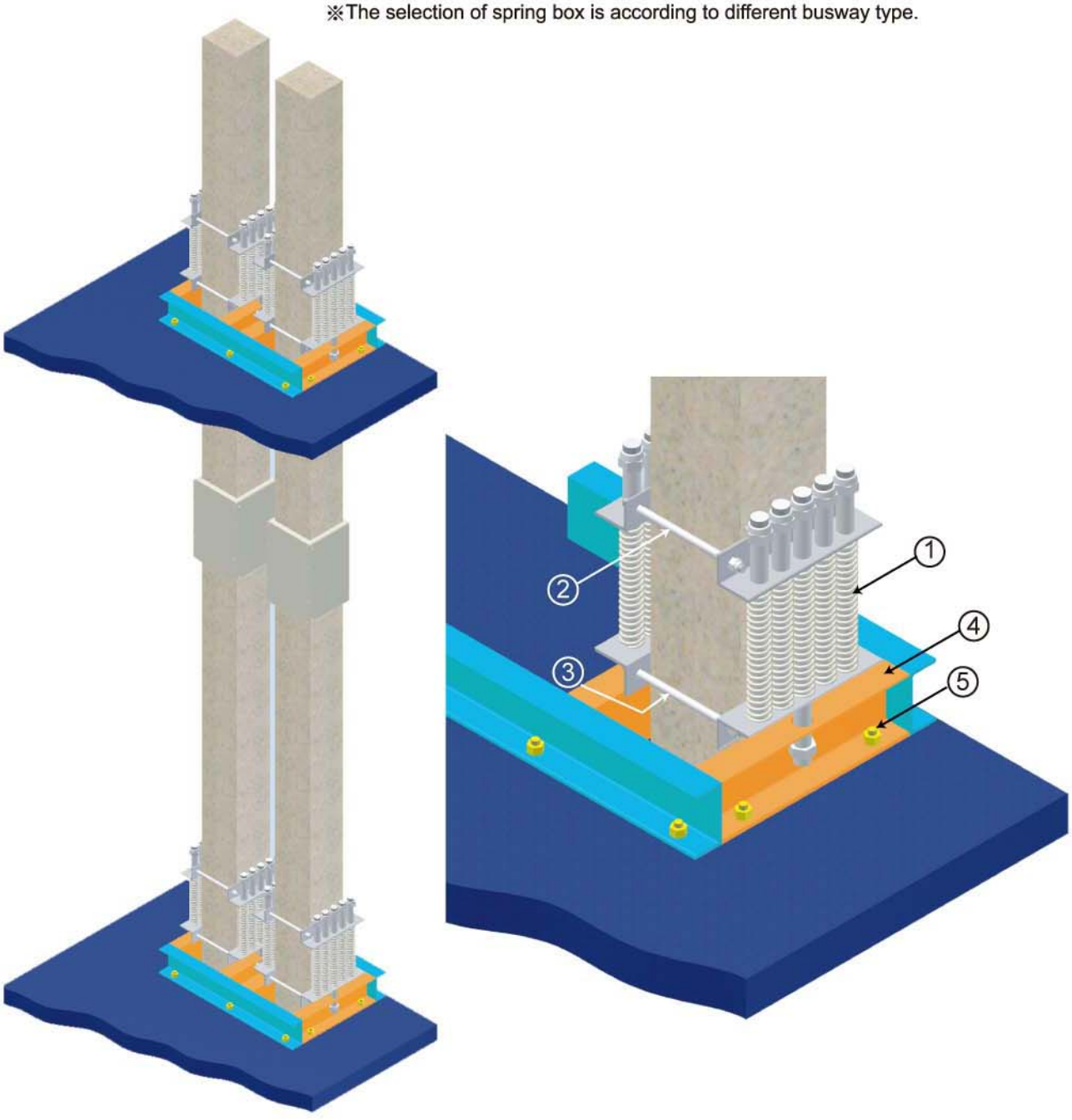



AG Type Terminal Elements

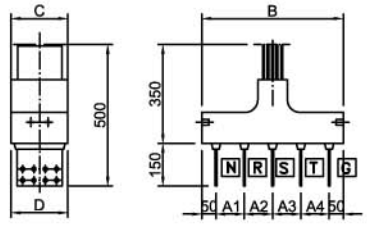

Figure 1

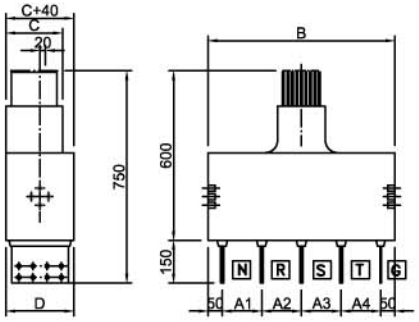

Figure 2

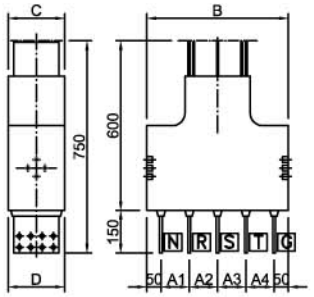

Figure 3

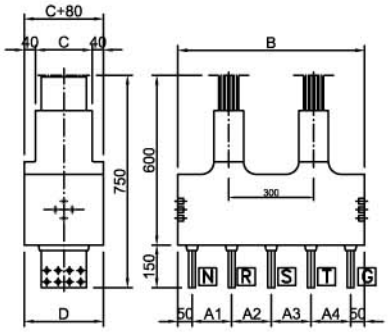

Figure 4

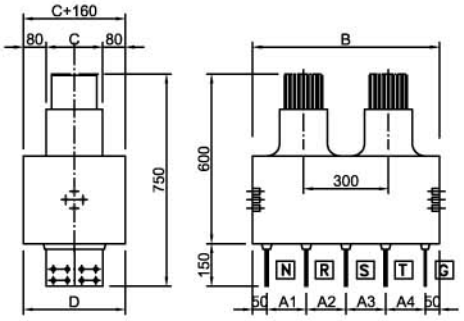

Figure 5

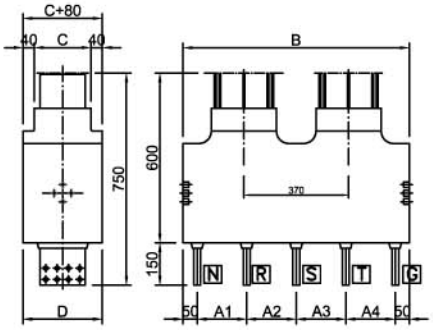

Figure 6

Unit:mm

Figure No.	Type	3Φ4W+G or 3Φ4W+1/2G(NRSTG)							3Φ4W(NRST) or 3Φ3W+1/2G(RSTG)					
		A1	A2	A3	A4	B	C	D	A1	A2	A3	B	C	D
Figure 1	LA02EC	100	100	100	100	500	60	60	100	100	100	400	60	60
	LA04EC	100	100	100	100	500	80	80	100	100	100	400	80	80
	LA08EC	100	100	100	100	500	120	120	100	100	100	400	120	120
	LA12EC	100	100	100	100	500	160	160	100	100	100	400	160	160
	LA16EC	100	100	100	100	500	200	200	100	100	100	400	200	200
Figure 2	LB08EC	140	140	140	140	660	120	160	140	140	140	520	120	160
	LB12EC	140	140	140	140	660	160	200	140	140	140	520	160	200
	LB16EC	140	140	140	140	660	200	240	140	140	140	520	200	240
Figure 3	NLV16	100	100	100	100	500	200	200	100	100	100	400	200	200
	NLV20	100	100	100	100	500	240	240	100	100	100	400	240	240
	NLV24	100	100	100	100	500	280	280	100	100	100	400	280	280
Figure 4	LA08DC	140	140	140	140	660	120	200	140	140	140	520	120	200
	LA12DC	140	140	140	140	660	160	240	140	140	140	520	160	240
	LA16DC	140	140	140	140	660	200	280	140	140	140	520	200	280
Figure 5	LB08DC	140	140	140	140	660	120	280	140	140	140	560	120	280
	LB12DC	140	140	140	140	660	160	320	140	140	140	560	160	320
	LB16DC	180	180	180	180	820	200	360	180	180	180	640	200	360
Figure 6	NLV16-D	175	175	175	175	800	200	280	175	175	175	625	200	280
	NLV20-D	175	175	175	175	800	240	320	175	175	175	625	240	320
	NLV24-D	175	175	175	175	800	280	360	175	175	175	625	280	360



AO Type Terminal Elements

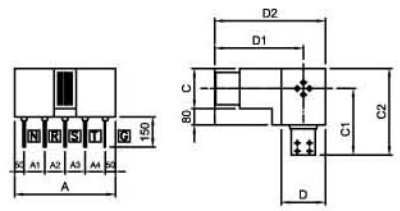

Figure 1

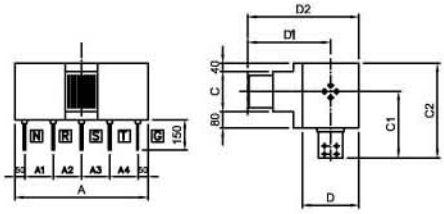

Figure 2

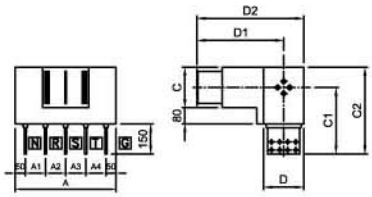

Figure 3

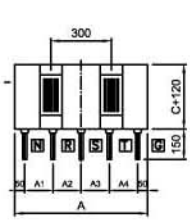

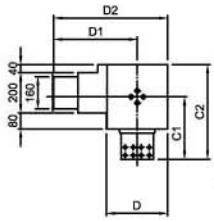

Figure 4

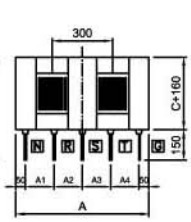

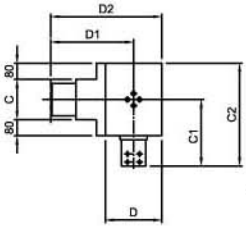

Figure 5

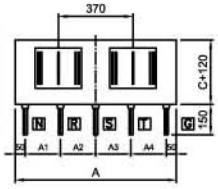

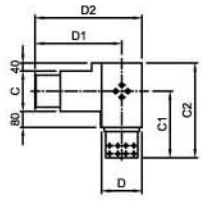

Figure 6

Unit:mm

Figure No.	Type	3Φ4W+G or 3Φ4W+1/2G(NRSTG)											3Φ4W(NRST) or 3Φ3W+1/2G(RSTG)									
		A	A1	A2	A3	A4	C	C1	C2	D	D1	D2	A	A1	A2	A3	C	C1	C2	D	D1	D2
Figure 1	LA02EC	500	100	100	100	100	60	260	290	60	380	410	400	100	100	100	60	260	290	60	380	410
	LA04EC	500	100	100	100	100	80	270	310	80	370	410	400	100	100	100	80	270	310	80	370	410
	LA08EC	500	100	100	100	100	120	290	350	120	390	450	400	100	100	100	120	290	350	120	390	450
	LA12EC	500	100	100	100	100	160	310	390	160	410	490	400	100	100	100	160	310	390	160	410	490
	LA16EC	500	100	100	100	100	200	330	430	200	430	530	400	100	100	100	200	330	430	200	430	530
Figure 2	LB08EC	660	140	140	140	140	120	290	390	220	420	530	520	140	140	140	120	290	390	220	420	530
	LB12EC	660	140	140	140	140	160	310	430	260	440	570	520	140	140	140	160	310	430	260	440	570
	LB16EC	660	140	140	140	140	200	330	470	300	460	610	520	140	140	140	200	330	470	300	460	610
Figure 3	NLV16	500	100	100	100	100	200	330	430	200	430	530	400	100	100	100	200	330	430	200	430	530
	NLV20	500	100	100	100	100	240	350	470	240	470	590	400	100	100	100	240	350	470	240	470	590
	NLV24	500	100	100	100	100	280	370	510	280	510	650	400	100	100	100	280	370	510	280	510	650
Figure 4	LA08DC	660	140	140	140	140	120	290	390	220	380	490	520	140	140	140	120	290	390	220	380	490
	LA12DC	660	140	140	140	140	160	310	430	260	400	530	520	140	140	140	160	310	430	260	400	530
	LA16DC	660	140	140	140	140	200	330	470	330	420	570	520	140	140	140	200	330	470	330	420	570
Figure 5	LB08DC	660	140	140	140	140	120	290	430	310	515	670	560	140	140	140	120	290	430	310	515	670
	LB12DC	660	140	140	140	140	160	310	470	350	535	710	560	140	140	140	160	310	470	350	535	710
	LB16DC	820	180	180	180	180	200	330	510	390	605	750	640	180	180	180	200	330	510	390	605	750
Figure 6	NLV16-D	800	175	175	175	175	200	330	430	200	430	530	625	175	175	175	200	330	430	200	430	530
	NLV20-D	800	175	175	175	175	240	350	470	240	470	590	625	175	175	175	240	350	470	240	470	590
	NLV24-D	800	175	175	175	175	280	370	510	280	510	650	625	175	175	175	280	370	510	280	510	650



Dimensions of Standard Terminal Elements Copper Plate for Low Voltage Busway

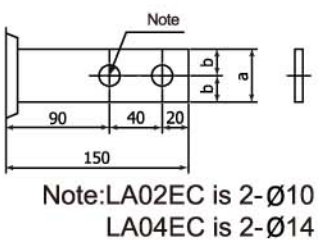

Note:LA02EC is 2-Ø10
LA04EC is 2-Ø14

Figure 1

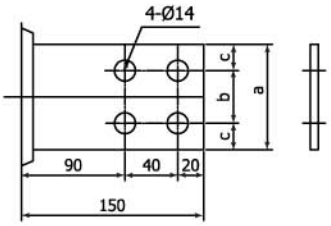

Figure 2

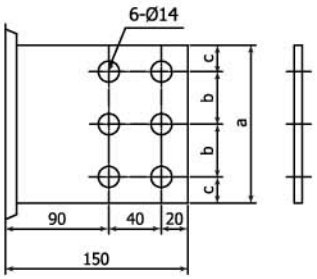

Figure 3

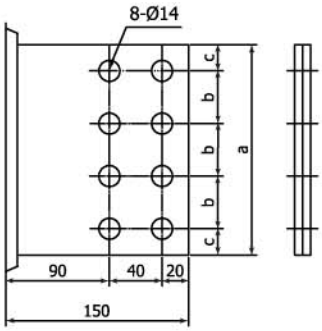

Figure 4

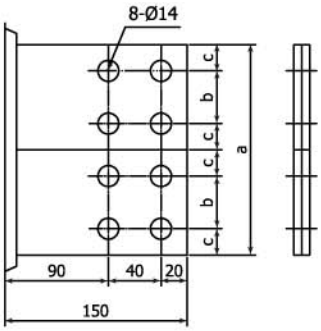

Figure 5

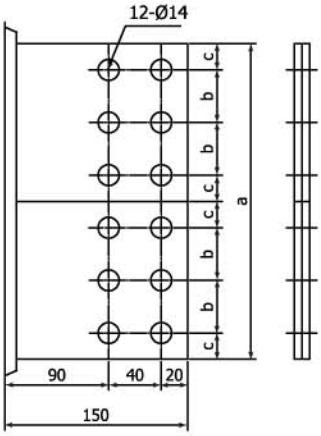

Figure 6

Figure	Type	Type of Terminal Elements	Dimensions(unit:mm)		
			a	b	c
Figure 1	LA02EC	AG/AO	20	10	-
	LA04EC	AG/AO	40	20	-
Figure 2	LA08EC	AG/AO	80	40	20
Figure 3	LA12EC	AG/AO	120	40	20
	LB12EC	AG/AO	120	40	20
Figure 4	LA16EC	AG/AO	160	40	20
	NLV16	AG/AO	160	40	20
Figure 5	LB16EC	AG/AO	160	40	20
	LB08DC	AG/AO	160	40	20
	NLV16-D	AG/AO	160	40	20
	LB12DC	AG/AO	200	40	30
	NLV20	AG/AO	200	40	30
	NLV20-D	AG/AO	200	40	30
Figure 6	LB16DC	AG/AO	240	40	20
	NLV24	AG/AO	240	40	20
	NLV24-D	AG/AO	240	40	20



Opening Requirement of Standard Terminal Elements and Switchgear for Low Voltage Busway

Opening Dimensions of Switchgear Top, Bottom, and Rear Side

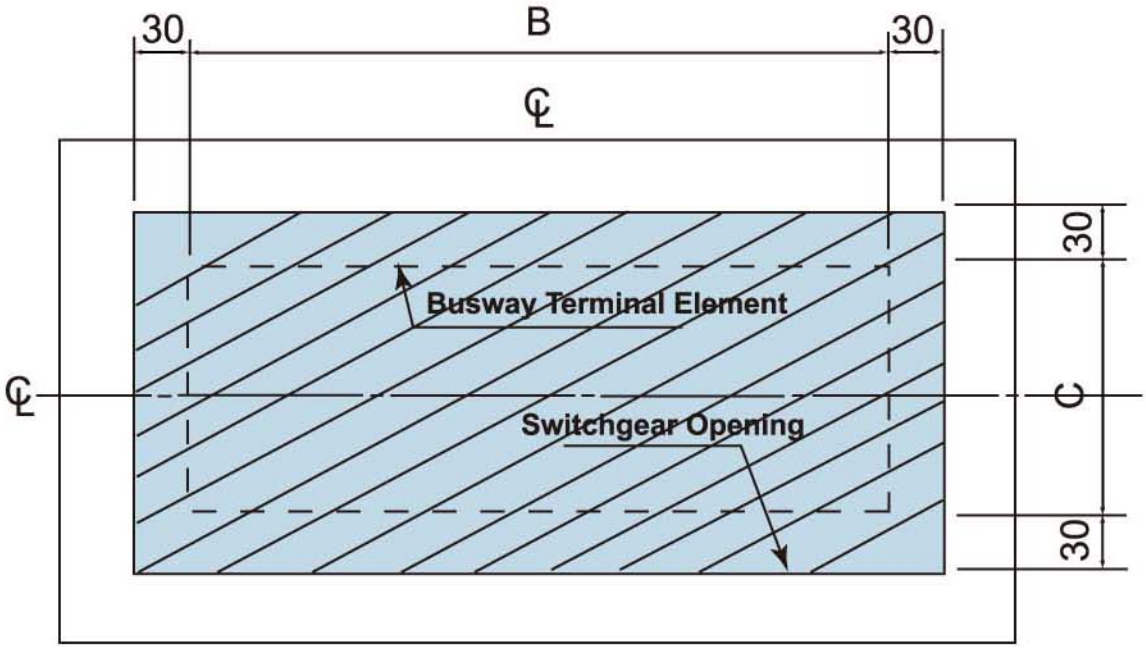

Busway Terminial Elements Opening Dimensions

Unit: mm

Type	AG Type Terminial Elements		AO Type Terminial Elements	
	C	B	C	B
LA02EC	60	500	60	500
LA04EC	80	500	80	500
LA08EC	120	500	120	500
LA12EC	160	500	160	500
LA16EC	200	500	200	500
LA08DC	200	660	200	660
LA12DC	240	660	260	660
LA16DC	280	660	300	660
LB08EC	160	660	220	660
LB12EC	200	660	260	660
LB16EC	240	660	300	660
LB08DC	280	660	310	660
LB12DC	320	660	350	660
LB16DC	360	820	390	820
NLV16	200	500	200	500
NLV20	240	500	240	500
NLV24	280	500	280	500
NLV16-D	200	800	200	800
NLV20-D	240	800	240	800
NLV24-D	280	800	280	800



Low Voltage Busway Terminal Element and Switchgear Standard Guidline

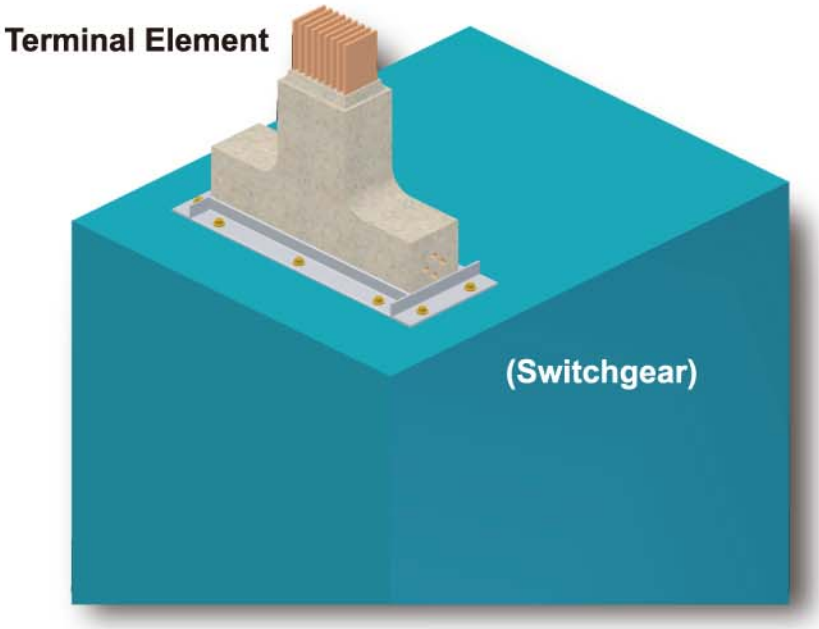

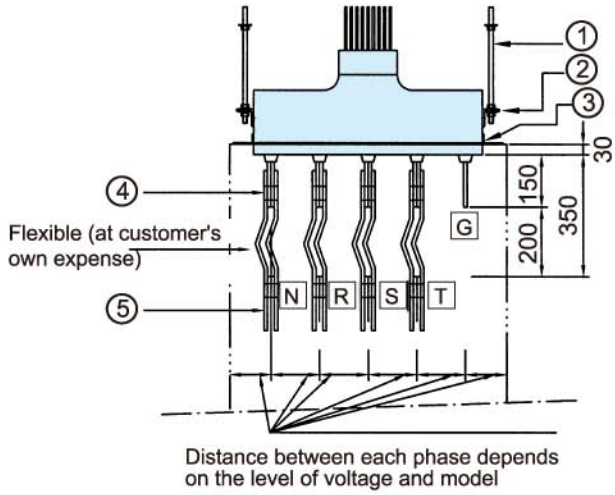

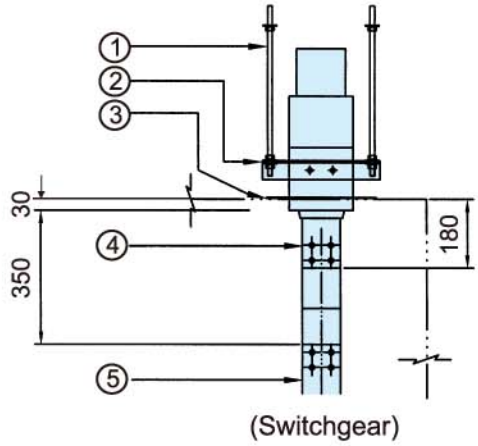

No.	Name	Specs	Remark
1	Full threaded screw	1/2"	Zinc-plated product (Included in installation work)
2	Angle Steel	6t×50×50mm	Zinc-plated product (Included in installation work)
3	Terminal element seal	Steel plate t= 2mm	Painted
4	Flexibles	The 200mm reserved space between terminal element and switchgear are connected by flexibles.	Materials of this portion and connection work does not belong to the busway contractor.
5	Connection copper plate of switchgear	According to Switchgear design.	The drillings on copper plate are designed, processed and connected by switchger cortractor.

Note: This diagram is the standard connection interface.
Actual location of connection is determined case by case.



Low Voltage Busway Terminal Element and Generator Connection Standard Guidline

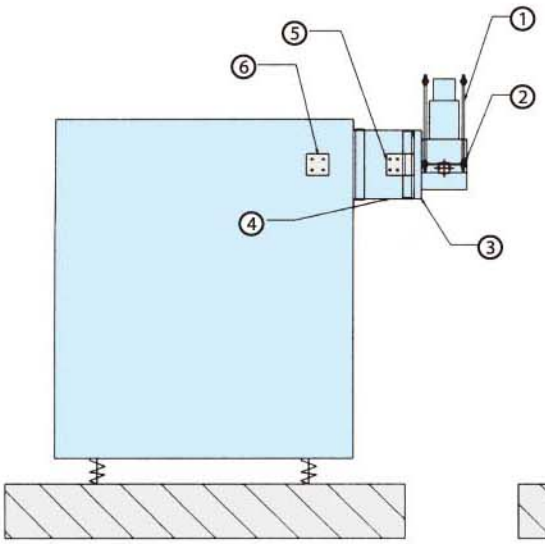

Transformer

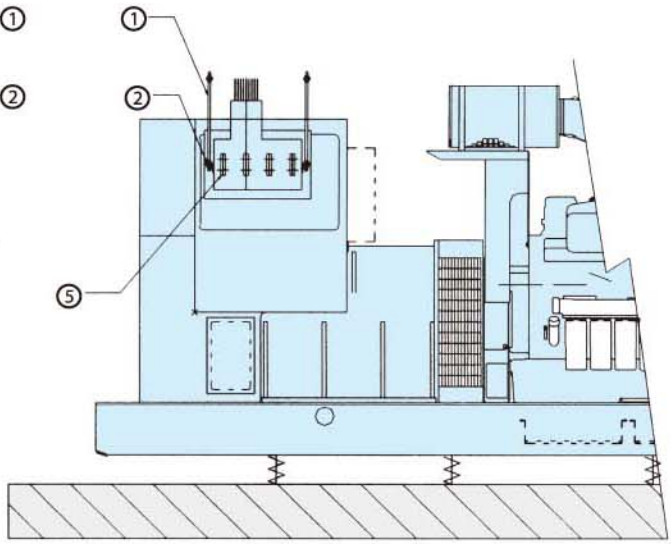

Generator

No.	Name	Specs	Remark
1	Full threaded screw	1/2"	Zinc-plated product (Included in installation work)
2	Angle Steel	6t×50×50mm	Zinc-plated product (Included in installation work)
3	Terminal element seal	Steel plate t=2mm	Painted
4	Fireproof cambric	A01	Non-Combusion (Included in installation of flange)
5	Flexibles	The reserved space between terminal element and generator are connected by flexibles.	Materials of this portion and connection work does not belong to the busway contractor.
6	Connection copper plate of generator/ transformer	According to Switchgear design.	The drillings on copper plate are designed, processed and connected by switchgear contrator.



Plug-in Unit

A. The standard length of each section of plug-in unit type busway is 3m and 4m. The plug-in points should be compared with the quantity and position of MCCB from customer's system drawing. Extra points need to be reserved by customer's actual requirement and the price is determined separately.

B. When the plug-in unit is taken off, the opening of the leads is sealed by the insulation cover with the protection level IP65.

C. There is an interlock device between plug-in unit and busway. In order to ensure the safety of operator, the plug-in unit can not be taken off from busway unless MCCB is off.

D. The "ON/OFF "indication is shown on the cover for operation of plug-in unit. There has an interlock between the cover of plug-in unit and MCCB to make sure when MCCB is turned ON that the cover of plug-in unit can not be opened.(Unlock the cover from outside when MCCB is turned ON, which is another option for customer. The price differs from general type.)

E. The design of plug-in unit meets the requirement of IEC60529 IP54/IP55.(IP55 is optional, the price is determined separately.)

F. For minimum distance between busway, please refer to the horizontal/vertical pitch of "Product Installation Description". If the different rated current plug-in unit is installed, the maximum unit size should be used as basis.

G. The design of plug-in unit fingers and flange connection are patented with M328135, low contact resistance is the major advantage for the design.

H. The standard colour of plug-in unit is white N-9.5.(The colour is optional.)

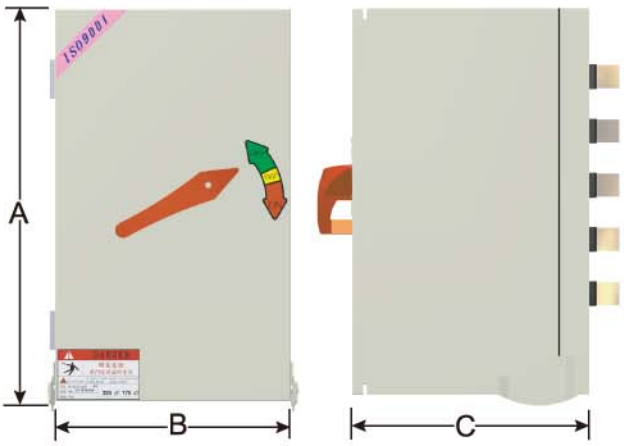

BUSWAY TYPE	CURRENT RATING(A)	DIMENSION(mm) (AxBxC)
3Φ4W+G(5P)	125AF,15AT-125AT	350x260x287
3Φ4W+1/2G(9P)	125AF,15AT-125AT	500x300x307
3Φ4W+G 3Φ4W+1/2G	250AF,126AT-250AT	
3Φ4W+G 3Φ4W+1/2G	400AF,251AT-400AT	600x300x307
3Φ4W+G 3Φ4W+1/2G	600AF,401AT-600AT 800AF,601AT-800AT	900x350x380
3Φ4W+G 3Φ4W+1/2G	1600AF,1001AT-1600AT	1350x500x500

Note:1.Design is based on TO/TG series MCCB of TECO.
2.MCCB other than TECO is selected, the price is discussed separately.

1. When the plug-in unit is taken off, the opening of the leads must be placed by the insluation cover.



2. Install the basement of plug-in unit.



3. Insert the plug-in unit onto the support plate of basement.



4. Installation completed.





1. Temperature correction coefficient for rated current

Maximum ambient temperature °C	20	25	30	35	40	45	50	55	60
Daily average ambient temperature °C	15	20	25	30	35	40	45	50	55
Correction coefficient	1.18	1.14	1.09	1.05	1.00	0.94	0.88	0.82	0.75

2.Voltage drop calculation

$\triangle U = \sqrt{3} \times Is \times L \times (R \cos\theta + X \sin\theta) \times 10^{-6}$

$\triangle U$	=Voltage drop	(Volts)
Is	=Load current	(Amps)
L	=Line length	(m)
R	=Resistance	($\mu\Omega$/m)
X	=Reactance	($\mu\Omega$/m)
$\cos\theta$	=Power factor	
$\sin\theta$	$=\sqrt{(1-\cos^2\theta)}$	

3. Product model identification

LA	08	E	C	5	-	480

LA	Product series code	LA:Low voltage 1kV LA series LB:Low voltage 1kV LB series NLV:Low voltage 1kV NLV series
08	Copper bar width	04 w=40mm , 08 w=80mm , 12 w=120mm , 16 w=160mm, 20 w=200mm, 24 w=240mm,
E	Single/Double conductor of each phase	E Single line D Double line
C	Conductor type	C Copper conductor A Aluminium conductor
5	No. of conductors	
480	Cross sectional area of conductor(mm^2)	$480mm^2$

4.For calculation of general product data or technical information, please contact with manufacturer or local agency.



A.Low voltage busway dieletric tests: Insulation resistance test and power frequency voltage withstand test

Electrical tests		Insulation resistance test	Power frequency voltage withstand
Standards		TECOBAR	IEC 60439-2
Type	Ur at 60Hz V	R at 1kV DC M Ω	U at 60 Hz 1min V
LA 02-04-08-12-16	1000	2000	5000
LB 04-08-12-16	1000	2000	5000
NLV 16-20-24	1000	2000	5000

B. Appearance inspection

The appearance of each element must be inspected. Result to be mentioned in final inspection report.

C. Dimension inspection

All dimensions are to be compared with customer's order sheet. Result to be mentioned in final inspection report.

D. Outgoing test report

Low voltage parts shall be tested prior to shipment and attached with outgoing test report.



Projects Reference List

No.	Project	Industry Type
1.	Shih-Ta Integrated Circuit Corp. - Test Building Project	Wafer Foundry
2.	Winbond Electronics Corp., Factory IV	Wafer Foundry
3.	Winbond Electronics Corp., FAB5 Factory	Wafer Foundry
4.	United Microelectronics Corp., Lien-Cheng Factory II	Wafer Foundry
5.	Winbond Electronics Corp. LV	Wafer Foundry
6.	Phoenix Precision Technology Corporation	Electronic Industry
7.	Phoenix Precision Technology Corporation - FAB5 Factory New Construction Project	Electronic Industry
8.	Kingpak Technology Inc. - Factory	Electronic Industry
9.	Wafer Works Corp., Yang-Mei Factory	Electronic Industry
10.	Arima Computer Corp. - Factory	Electronic Industry
11.	Taiwan Mask Corp., - Hsinchu Factory II	Electronic Industry
12.	Toplux Technology Co., Ltd.	Electronic Industry
13.	ZyXEL Communications Corp.	Electronic Industry
14.	Hwa Tong Electronic Co., Ltd.	Electronic Industry
15.	Hwa Tong Electronic Co., Ltd. - Additional Project	Electronic Industry
16.	HannStar Display Corp.	Electronic Industry
17.	Orient Semiconductor Electronics, Ltd.	Electronic Industry
18.	Winstek Semiconductor Corp.	Electronic Industry
19.	Lite Vision Corp.	Electronic Industry
20.	ARIMA Display Corp.	Electronic Industry
21.	Sheng Yu Technology Co., Ltd.	Electronic Industry
22.	ASYS Corporation	Electronic Industry
23.	Flow Asia Corporation 7-in-1 Project	Electronic Factory
24.	Davicom Semiconductor, Inc., 3-in-1 Project	Electronic Factory
25.	Optodisc Technology Corporation	Electronic Industry
26.	Formosa Epitaxy Inc.	Electronic Industry
27.	Chilisin Electronics Corp.	Electronic Industry
28.	Winstek Semiconductor Corp.	Electronic Industry
29.	HannStar Display Corp. ¡V Chien-Chen Project	Electronic Industry
30.	Powertech Technology Inc.	Electronic Industry
31.	Anpec Electronics Corp.	Electronic Industry
32.	Winstek Semiconductor Corp.	Electronic Industry
33.	TOPPAN CFI	Electronic Industry
34.	Powertech Technology Inc., Phase 2	Electronic Industry
35.	Powertech Technology Inc., Phase 2 Extension Section Equipment	Electronic Industry
36.	Realtek Semiconductor Corp.	Electronic Industry
37.	ZyXEL Communications Corp.V Hsinchu Science Park Factory 4th Floor Renovation Project	Electronic Industry
38.	United Microelectronics Corp. V Southern Taiwan Science Park R&D Building	Electronic Industry
39.	Fu Te Electronics Corp.	Electronic Industry
40.	Kuang-Han Engineering (Carrefour in Hsin-Chuang City)	Electronic Industry
41.	GIO Optoelectronics Corp. V Factory II New Construction Project	Electronic Industry
42.	AGC Display Glass Taiwan Co., Ltd. Phase 10 Factory	Electronic Industry
43.	AGC Display Glass Taiwan Co., Ltd. Phase 7 Factory	Electronic Industry
44.	AGC Display Glass Taiwan Co., Ltd. Phase 10 Factory, Additional Project	Electronic Industry
45.	Toppan Chunghwa Electronics Corp.	Electronic Industry
46.	Song Chuan Precision Co. Ltd. - New Construction Project of Water, Electricity, Fire & Air-conditioning System	Electronic Industry
47.	Hsinchu Durban Science Park, Phase 8 Factory Building Construction Project	Electronic Industry
48.	Wistron Corporation V Hsin-An Factory High Voltage Power Supply Improvement Project	Electronic Industry
49.	GIO Optoelectronics Corp. - LED Factory New Construction Project Phase 2	Electronic Industry
50.	NexPower Technology Corp.	Electronic Industry
51.	Danen Technology Corporation	Electronic Industry
52.	AGC Display Glass Taiwan Co., Ltd. New Factory Construction Project	Electronic Industry
53.	Solar City Intl. Co., Ltd. V Chu-Pei Factory New Construction Project	Electronic Industry
54.	Malico Inc. - New Factory Construction Project	Electronic Industry
55.	AGC Display Glass Taiwan Co., Ltd., Phase 8 New Factory Construction Project	Electronic Industry
56.	Solar City Intl. Co., Ltd. Multicrystalline Section Improvement Project	Electronic Industry
57.	AvanStrate Taiwan Inc.	Electronic Industry
58.	AvanStrate Taiwan Inc. - TF5 Scheduled Repair Project	Electronic Industry
59.	Youngtek Electronics Corp. - New Construction Project of Busway	Electronic Industry
60.	AGC Display Glass Taiwan Co., Ltd., Phase 8 New Factory Construction Project (2)	Electronic Industry
61.	AGC Display Glass Taiwan Co., Ltd., Phase 9 New Factory Construction Project (Follow-up)	Electronic Industry
62.	AGC Display Glass Taiwan Co., Ltd., Phase 9 New Factory Construction Project	Electronic Industry
63.	AvanStrate Taiwan Inc., Phase 3	Electronic Industry
64.	United Microelectronics Corp. - Southern Taiwan Science Park A12 New Construction Project	Electronic Industry
65.	Wafering Technology Corporation - New Factory Construction Project	Electronic Industry
66.	OptoTech Corporation (Factory II)	Electronic Industry
67.	FAB2A-2 Busway System Project	Electronic Industry
68.	Epistar Corporation - N8 Factory High-Voltage Substation Busway System Project	Electronic Industry
69.	N6 Factory Chiller Unit CH#7 V Additional Auxiliary Busway System	Electronic Industry
70.	Wistron Corporation	Electronic Industry
71.	STATS ChipPAC Taiwan Semiconductor Corp. V Bumping Line 30K Dust-free Room Project	Electronic Industry
72.	Hwa Tong Electronic Co., Ltd.	Electronic Industry
73.	Taiwan Semiconductor Manufacturing Co., Ltd., Solar Energy Plant	Electronic Industry
74.	United Microelectronics Corp. V Rectification Section	Electronic Industry
75.	AGC Display Glass Taiwan Co., Ltd.- Phase 3 New Factory Construction Project	Electronic Industry
76.	United Microelectronics Corp. V Southern Taiwan Science Park CUB	Electronic Industry
77.	Solar Technology Inc. Science Park Hsiang-Yun Project (Jung-Hsin Factory) New Construction Project	Electronic Industry
78.	OptoTech Corporation Phase 2	Electronic Industry
79.	Taiwan Semiconductor Mfg. Co. Ltd. - Central Taiwan Science Park Factory 15, Phase 1 New Construction Project	Electronic Industry
80.	AU Optronics Corp., Hou-Li Factory	Electronic Industry
81.	HannStar Display Corp. (Factory in the Southern Taiwan Science Park, Phase 1)	TFT-LCD Factory
82.	HannStar Display Corp. (Factory in the Southern Taiwan Science Park, Phases 2 & 3)	TFT-LCD Factory
83.	Contrel Technology Co., Ltd.	TFT-LCD Factory
84.	Contrel Technology Co., Ltd. Phase 2	TFT-LCD Factory
85.	Acer Internet Center	Data Center
86.	Acer Internet Center V Generator	Data Center
87.	Acer Internet Center V UPS	Data Center
88.	Cathay Nei-Hu Information Center	Data Center
89.	Acer Information V Kun-Ke Computer Facilities New Construction Project	Data Center
90.	Acer Information V Kun-Ke 4th Floor New Construction Project	Data Center
91.	Acer Information V Kun-Ke 5th Floor New Construction Project	Data Center
92.	Acer Information V ABCD No. 4 Generator Busway System Rectification Project	Data Center
93.	Acer Information V ABCD No. 4 Generator Busway System Dismantling Project	Data Center
94.	Myanmar Factory (Project in Myanmar)	Power Plant
95.	EVER Energy Co., Ltd.	Power Plant
96.	Shih-Lin Ginza Building	Office Building
97.	Pao Shiang Construction & Industrial Co. Building	Office Building
98.	Taoyuan County Government Building	Office Building
99.	Pei-Kang Mazu (Goddess) Temple	Office Building
100.	Kaohsiung Fisherman Training Center	Office Building
101.	Ta-Hsin Securities Co. Building	Office Building
102.	Southern Taiwan Science Park Warehouse and Transportation Center	Office Building
103.	Pfizer Inc.	Office Building
104.	Cathay Xinyi e-Financial Building	Office Building



Projects Reference List

No.	Project	Industry Type
105.	Taiwan Prosperity Chemical Corporation	Office Building
106.	Deryunn Commercial Square Building	Office Building
107.	Deryunn Financial Square Building	Office Building
108.	Longshan Temple Library	Office Building
109.	Cathay Financial Information Building	Office Building
110.	Bao Chen Construction Co., Ltd. Building	Office Building
111.	Taipower Headquarters Substation	Office Building
112.	Taiwan Prosperity Chemical Corporation	Office Building
113.	Nangang Software Park, Phase 2	Office Building
114.	Nangang Software Park, Phase 2	Office Building
115.	Taiwan Prosperity Chemical Corporation	Office Building
116.	Taipower Headquarters Substation	Office Building
117.	Chunghwa Telecom, Inc. Building V Ministry of Transport & Communications Building	Office Building
118.	Shung Ye Group, Chungli Office	Office Building
119.	Nangang Police Station	Office Building
120.	Institute of Atomic and Molecular Sciences of Academia Sinica V Generator Replacement Project	Office Building
121.	Taipower Northwest District Office Emergency Supply Maintenance Building	Office Building
122.	Ministry of National Defense V Air Conditioning Section of the Po-Ai Program	Office Building
123.	Taipower Pingtung District Office - Air Conditioning Section National Tax Administration of Northern Taiwan Province,	Office Building
124.	Minister of Finance - New Office Construction Project Environment Protection Administration of	Office Building
125.	Executive Yuan - Office Building Structural Reinforcement & Internal Space Improvement Project	Office Building
126.	Year Round Technology Corp. - New Office Building Construction at Cheng-Tai Road of Wu-Ku Township	Office Building
127.	Protrend Co., Ltd. - Headquarters Building in Nei-Hu District	Office Building
128.	Lite-On Semiconductor Corp. - Additional Engineering Project	Office Building
129.	Fu-Mao Construction Co., Ltd. V Sheng-Hsing Section Engineering Project	Office Building
130.	Academia Sinica - Agricultural Technology Building Construction Project	Office Building
131.	Taipower Co., Taoyuan District West Zone Office - Repair & Maintenance Building Busway System	Office Building
132.	Research Center for Humanities and Social Sciences of Academia Sinica - Emergency Generator Equipment	Office Building
133.	Taoyuan Irrigation Association	Office Building
134.	Chunghwa Telecom, Inc. Building UPS Circuit Additional and Rectification Project	Office Building
135.	Tainan County Environmental Science and Technology Park Building	Office Building
136.	Taiwan Prosperity Chemical Corporation (LV)	Office Building
137.	Taiwan Prosperity Chemical Corporation V 2nd Floor Additional Project	Office Building
138.	Kelti International Co., Ltd. V Xinyi Building Construction Project	Office Building
139.	Kaohsiung Po-Ai Building	Office Building
140.	Hou-Li Extra-high Voltage Substation Construction Project	Office Building
141.	Chunghwa Post V Additional Project of Ai-Kuo Building Rear Block Computer Facilities	Office Building
142.	The Technology Center of the Criminal Investigation Bureau, National Police Agency of the Ministry of the Interior	Office Building
143.	Power Distribution Center of Changhua District Office V Material Building Plumbing & Electricity Work Project	Office Building
144.	Miaoli County Government	Office Building
145.	China Airlines Park Development & Construction Project	Office Building
146.	Taiwan Prosperity Chemical Corporation EPC (Vapor)	Office Building
147.	Changhua District Office Building Air-conditioning System Replacement Project	Office Building
148.	Southern Taipei District Office - Material Building Air-conditioning System Project	Office Building
149.	Cathay World Building Facility Replacement Project	Office Building
150.	Investigation Bureau of the Ministry of Justice V Kaohsiung Office Construction Project	Office Building
151.	Fire Department of Taoyuan County Government- Office Building Construction Project	Office Building
152.	Chunghwa Post V Generator Installation & UPS System Project of Ai-Kuo Building	Office Building
153.	Acer Data Center V Kun-Ke Basement New Construction Project	Office Building
154.	Shin Kong Life Insurance Co., Ltd. V New Construction Office of Multi-purpose Building on Shih-Shang Road	Office Building
155.	Chi-Hsing Technology Co., Ltd. V New Building Construction Project	Office Building
156.	Tung-Kang Post Office Construction Project	Office Building
157.	Tung-Kang Post Office - New Air-conditioning System Construction Project	Office Building
158.	Taipower Co. - Pingtung Chao-Chou Service Office	Office Building
159.	Academia Sinica - Agricultural Technology Building Additional Construction Project	Office Building
160.	Kelti International Co., Ltd. V Xinyi Building Additional Engineering Project (ATS Panel)	Office Building
161.	Changhua District Office Building V Busway Replacement Project	Office Building
162.	China Steel Corp. - Headquarters Building Electrical Engineering Project	Office Building
163.	Chien-Chin Post Office New Building Construction Project	Office Building
164.	Southern Taipei District Office - Material Building Plumbing & Electricity Work Project	Office Building
165.	Taipower Co., Pingtung Chao-Chou Service Office - Additional Work Project	Office Building
166.	M.O.F. National Tax Administration of Central Taiwan Province V Taichung County Branch Office Construction Project	Office Building
167.	Taipei Tax Office, 2nd Floor Computer Facilities V Mechanical & Electrical Engineering Project	Office Building
168.	Changhua District Office, Pei-Tou Service Station Construction Project	Office Building
169.	Taichung Tax Office, 5th Floor Computer Facilities - Mechanical & Electrical Engineering Project	Office Building
170.	National Tax Administration of Northern Taiwan Province - Taipei County Building Project	Office Building
171.	Hsi-Chih Science Park V Xi-Liu Technology New Construction Project	Office Building
172.	Taichung Bureau of Health Promotion	Office Building
173.	Chungho City Land Administration and Tax Office	Office Building
174.	Taipower Co., Dispatch Control Center Hsin-Chuang Secondary City Center Central Government	Office Building
175.	Joint Service Office Building Construction Project V Plumbing & Electricity Engineering Contract	Office Building
176.	China Steel Corp. - Headquarters Construction Project V Generator Contract	Office Building
177.	Miaoli County Government V Additional Project	Office Building
178.	Hua Nan Bank Head Office - World Trade Center Plumbing, Electricity and Air Conditioner Contract	Office Building
179.	Li-Yu-Tan Plant V No. 2 Transformer Busway Replacement Contract	Water Works
180.	Sheng Yu Steel Co. - Factory Building Expansion Contract	Iron & Steel
181.	China Steel Corp. - Mechanical Work Contract	Iron & Steel
182.	Hsinchu Science Park V Warehouse & Transportation Center Phase 1	Logistics Center
183.	Yang Ming Marine Transport Corp. - Kaohsiung Cold-storage Warehouse & Logistics Center	Logistics Center
184.	Yang Ming Marine Transport Corp. - Air- Conditioner Contract for New Construction Project	Logistics Center
185.	Tainan Artillery School	School
186.	Nan Jeon College of Technology	School
187.	National University of Kaohsiung	School
188.	Wu Feng University	School
189.	Fooyin Institute of Technology	School
190.	Tzu Chi University, College of Medicine V Life Building Project	School
191.	National Taiwan Ocean University	School
192.	National Chiao Tung University, Taipei Campus	School
193.	Shu-Te University	School
194.	Ilan Institute of Technology	School
195.	AR-LG Phase 2	School
196.	Army Academy	School



Projects Reference List

No.	Project	Industry Type
197.	National University of Kaohsiung, College of Law	School
198.	National Huwei Institute of Technology	School
199.	Wu Feng Institute of Technology	School
200.	National Chiao Tung University Dormitory	School
201.	Fooyin University	School
202.	Chia Nan University of Pharmacy & Science	School
203.	Cardinal Tien College of Healthcare & Management	School
204.	National University of Kaohsiung, College of Economic Management	School
205.	National Taiwan University - Public Health Building	School
206.	Kun Shan University	School
207.	Wu Feng Institute of Technology V Gymnasium Construction Project	School
208.	Academia Sinica V Astronomy & Mathematics Building Construction Project	School
209.	National Taitung University - Administration Building Construction Project	School
210.	National Chung Hsing University, College of Social Science & Management Building Construction Project	School
211.	Yung-Fu Elementary School, Sanchung City, Taipei County V Phase 2 School Building Renovation Project (hardware)	School
212.	Peng-Lai Elementary School, Ta-Tung District, Taipei City V School Building Renovation, Expansion, and Underground Parking Lot Construction Project	School
213.	Taipei Physical Education College (Tien-Mu)	School
214.	Taipei Municipal Chung Shan Girls Senior High School - Combined Educational Building Construction Project	School
215.	National United University, Pa-Chia Campus (College of Engineering & Science) - Phase 1 Building Construction Project	School
216.	Yang Ming University - Laboratory Building Low Voltage Equipment Wiring Replacement and Grounding I mprovement Project	School
217.	National Taiwan University, Shui-Yuan Campus - Student Dormitory Construction Project (Plumbing & Electricity Contract)	School
218.	National Taichung Nursing College	School
219.	Taipei Physical Education College (Tien-Mu) - Additional Project	School
220.	Shih Chien University V Partial Rectification of Fire Loop Project	School
221.	National Taiwan University ¡V Room No. 2 Power System Improvement (Phase 2) Project	School
222.	Taipei Municipal Shilin Junior High School Combined Educational Building Construction Project	School
223.	National University of Kaohsiung, College of Humanities & Social Science - Building Construction Project	School
224.	National University of Kaohsiung, College of Humanities & Social Science Building New Construction Project	School
225.	Hsinchu Incinerator	Incinerator
226.	Taitung Incinerator	Incinerator
227.	Tainan Incinerator	Incinerator
228.	Hsinchu Incinerator	Incinerator
229.	Chang Hwa Bank, Taichung Branch	Bank, hotel, department store
230.	Lakeshore Hotel Phase 2	Bank, hotel, department store
231.	Far Eastern Department Stores Ltd., Pan-Chiao Branch	Bank, hotel, department store
232.	Chun-Fu Real Estate Co., Ltd. V Hotel on Min-Sheng Road Project	Bank, hotel, department store
233.	Heng-Chang Development Co., Ltd. V Nei-Hu Phase 6 Industrial Zone	Bank, hotel, department store
234.	Taiwan Sugar Corp., Nan-Tzu Wholesale Store	Bank, hotel, department store
235.	Cathay Tainan Shopping Center	Bank ,hotel ,department store
236.	Taiwan Sugar Corp., Jen-Te Shopping Center	Bank, hotel, department store
237.	Nice Prince Hotel and Nice Plaza V Plumbing, Electricity, Fire and Air-conditioning System Project	Bank, hotel, department store
238.	Miramar Resort - New Construction Project	Bank, hotel, department store
239.	Shilin Shopping Complex - Shopping Mall Block	Bank, hotel, department store
240.	Fullon Hotels & Resorts - Busway Repair and Maintenance Project	Bank, hotel, department store
241.	Kaohsiung Talee Department Store	Bank, hotel, department store
242.	Kaohsiung Talee Department Store - Additional Project	Bank, hotel, department store
243.	Vietnam Halong Bay Hotel	Bank, hotel, department store
244.	Radium Kagaya International Hotel Co. - New Construction Project	Bank, hotel, department store
245.	Shihlin Electric & Engineering Corp. - Shopping Mall Block Electrical Engineering Contract of the Shih Lin Factory Land Development Project	Bank, hotel, department store
246.	Chu-Pei Sheraton Hotel - New Construction Project	Bank, hotel, department store
247.	E-DA Outlet Mall - New Construction Project	Bank, hotel, department store
248.	E-DA Theme Park - New Construction Project	Bank, hotel, department store
249.	Evergreen Resort Hotel - New Construction Project	Bank, hotel, department store
250.	Evergreen Resort Hotel - New Construction Project (Additional Work Contract)	Bank, hotel, department store
251.	Ding Zan Development Co., Ltd. V Tamsui Fishers Resort Art Plaza and Hotel Construction Project	Bank, hotel, department store
252.	Chang Hwa Bank - High-voltage Substation Repair & Maintenance Work Project	Bank, hotel, department store
253.	Yamay Theme Park - Theme Hotel Construction Project	Bank, hotel, department store
254.	K-Hotel (Taipei)	Bank, hotel, department store
255.	Formosa Chemicals & Fibre Corp. SM2 Sixth Naphtha Cracker Project	Petrochemical industry
256.	Oriental Petrochemical (Shanghai) Corporation	Petrochemical industry
257.	Shanghai Chlor-Alkali Chemical Co., Ltd.	Petrochemical industry
258.	Shanghai Coking & Chemical Corp.	Petrochemical industry
259.	Yanchang Petroleum (Group) Co., Ltd. V Low-voltage Busway System (Transformer Unit 41)	Petrochemical industry
260.	Yanchang Petroleum (Group) Co., Ltd. V Low-voltage Busway System (Transformer #3)	Petrochemical industry
261.	Yanchang Petroleum (Group) Co., Ltd. V Low-voltage Busway System (Water Supply & Wire Distribution Room)	Petrochemical industry
262.	Nan Ya Plastic Corp. and Formosa Chemicals & Fibre Corp. - Factory	Petrochemical industry
263.	Nan Ya Plastic Corp. and Formosa Chemicals & Fibre Corp. - Vietnam Nhon Trach Plant Phase 1	Petrochemical industry
264.	Nan Ya Plastic Corp. and Formosa Chemicals & Fibre Corp. - Vietnam Nhon Trach Plant Phase 2	Petrochemical industry
265.	China Man-Made Fiber Corporation - ASU Factory Construction Project	Petrochemical industry
266.	Tasco Chemical Corp. - New Construction Project	Petrochemical industry
267.	Formosa Chemicals & Fibre Corp. - Hai Feng SM3 Plant	Petrochemical industry
268.	Hua-Hsia Polymer Co., Ltd., PVC Plant	Petrochemical industry
269.	Nan Ya Plastic Corp. and Formosa Chemicals & Fibre Corp. - Vietnam Nhon Trach Plant Phase 3 (VN2)	Petrochemical industry
270.	Nan Ya Plastic Corp. and Formosa Chemicals & Fibre Corp. - Vietnam Nhon Trach Plant (third water source for public use)	Petrochemical industry
271.	Yen An Oil Refinery Yanchang Petroleum (Group) Co., Ltd.	Petrochemical industry
272.	Ammonia & Urea Plants in MARY	Petrochemical industry
273.	Formosa Chemicals & Fibre Corp., Ningbo Plant	Petrochemical industry
274.	Formosa Plastic Corp., Mai-Liao Cogeneration Aeration Pool - Low Voltage Panel	Petrochemical industry
275.	Yantai Raffles Offshore Ltd. F&G Millennium SA Semi-Submersible Drilling Unit (Rockwell) Barefield Semi-submersible Drilling Unit (Hull No. YRO2006-193 Busway System)	Oil drilling platform
276.	Hohehaote Oil Refining Project	Oil drilling platform
277.	National Museum of Prehistory	Museum
278.	Chi Mei Medical Center	Hospital
279.	Taichung Veterans General Hospital	Hospital
280.	Taoyuan General Hospital, Hsin-Wu Branch	Hospital
281.	National Taiwan University Hospital, Research Building	Hospital
282.	Kaohsiung Medical University, College of Medicine	Hospital
283.	Changhua Christian Hospital	Hospital
284.	Lo-Sheng Sanatorium	Hospital



Projects Reference List

No.	Project	Industry Type
285.	Taichung Hospital	Hospital
286.	Hualien County Yu-Li Hospital	Hospital
287.	Tou-Liu Hospital - New Construction Project	Hospital
288.	China College of Medical Technology V 2nd Student Dormitory Construction Project	Hospital
289.	Chi Mei Medical Center	Hospital
290.	Chiayi Chang Gung Memorial Hospital	Hospital
291.	Hualien Mennonite Christian Hospital - New Construction Project	Hospital
292.	Taipei Hospital (Sanchung) Renovation Work Project	Hospital
293.	Kaohsiung Medical University V 2nd Education & Research Building Construction Project	Hospital
294.	Tian Chen Hospital - New Construction Project	Hospital
295.	Kaohsiung Medical College - Old Campus Expansion Project	Hospital
296.	Tri-Service General Hospital - Renovation Work Project	Hospital
297.	Tri-Service General Hospital, Ting-Chou Branch V Power Equipment Replacement Project	Hospital
298.	Taiwan Electric Research and Testing Center	Testing Center
299.	Taiwan Electric Research and Testing Center - Solar Cell & Display Laboratory Wire Distribution Project	Testing Center
300.	Taiwan Photon Source Synchrotron Accelerator - New Construction Project	Testing Center
301.	Taiwan Mobile Co., Ltd., Customer Service Center	Telecom Engine Room
302.	Chunghwa Telecom, Inc., Nan Kang Engine Room	Telecom Engine Room
303.	Taiwan Mobile Co., Ltd., Nei-Hu Electro-Optical Building - IDC Engine Room Construction Project	Telecom Engine Room
304.	New Century InfoComm Tech Co., Ltd. - Panchiao Engine Room Construction Project	Telecom Engine Room
305.	Taiwan Mobile Co., Ltd. - New Construction Project	Telecom Engine Room
306.	National Center for High-Performance Computing - Engine Room Expansion Project	Telecom Engine Room
307.	Tainan Anping Harbor	Wharf
308.	China Shipbuilding Corp., Keelung Ship Yard V Starboard	Wharf
309.	China Shipbuilding Corp., Keelung Ship Yard V Portside	Wharf
310.	Shanghai Waigaoqiao	Wharf
311.	Tsoying North Port Wharf V On-shore Power Equipment Repair Work Project	Wharf
312.	Kaohsiung City Y-043 Wharf V On-shore Power Equipment Repair Work Project	Wharf
313.	Kaohsiung Port Intercontinental Container Terminal - Phase 1	Wharf
314.	TECO Electric & Machinery Co. Ltd., Kuan-Yin Factory	Factory
315.	Romastone Co., Ltd., China Factory	Factory
316.	TECO Electric & Machinery Co. Ltd., Wuxi Factory	Factory
317.	TECO Electric & Machinery Co. Ltd., Wuxi Factory	Factory
318.	Yulon Motors (Car Body Plant)	Factory
319.	Yulon Motors (Assembly Plant)	Factory
320.	Yulon Motors V Car Factory	Factory
321.	Kyodo Kokusan K.K., Tainan Branch	Factory
322.	Li-Peng Polymer Co., Ltd.	Factory
323.	Li-Peng Polymer Co., Ltd.	Factory
324.	Shin Zu Shing Co., Ltd. V Shu-Lin Factory	Factory
325.	Changhua Pou Chen Group	Factory
326.	Tonnie Cosmetics Co., Ltd.	Factory
327.	TECO Electric & Machinery Co. Ltd. - Jiangxi Factory Relocation Project	Factory
328.	TECO - Qingdao Compressor Factory Construction Project	Factory
329.	TECO - Qingdao Compressor Factory Busway Connector Additional Project	Factory
330.	Raheja Mindspace (India Project)	Factory
331.	Depo Auto Parts Ind. Co., Ltd. ¡V Hsin-Ying Injection Plant Construction Project	Factory
332.	Jenn Feng Industrial Co., Ltd., Ping-Chen Factory - Voltage Adjustment and Partial Construction Project	Factory
333.	Jenn Feng Industrial Co., Ltd., Ping-Chen Factory - Voltage Adjustment and Partial Construction Project	Factory
334.	Lung-Te Public Factory - Electric Room Firefighting Instrumentation Improvement Project	Factory
335.	Changhua Rayon Factory #1 - Power Equipment of Refrigerant Fluid Crystallization Electric Room	Factory
336.	STATS ChipPAC Taipei Semiconductor Corp. - Generator Equipment Expansion Project	Factory
337.	Swancor Ind. Co., Ltd. ¡V Factory Building Extension Project	Factory Building
338.	TECO Fujian Factory Phase 1 Construction Works	Factory Building
339.	Ta-I Technology Co., Ltd. - Factory Building Renovation Project	Factory Building
340.	Topcell Solar International Co., Ltd. V Kuan-Yin Factory Construction Project (Phase 2 Dormitory)	Factory Building
341.	Topcell Solar International Co., Ltd. V Kuan-Yin Factory Construction Project (Copper Busway)	Factory Building
342.	Topcell Solar International Co., Ltd. V Kuan-Yin Factory Construction Project (Aluminum Busway System)	Factory Building
343.	Topcell Solar International Co., Ltd. V Kuan-Yin Factory 2nd Floor Expansion Project	Factory Building
344.	Win Semiconductors Corp. - Hwa Ya Technology Park Factory # 3 Renovation & Electrical Work Project	Factory Building
345.	Procrystal Technology Co., Ltd. - Secondary Distribution Project for Machines	Factory Building
346.	Chi Mei Lighting Technology Corp. V Factory # 2 Wire Distribution & Automatic Control Project	Factory Building
347.	TXC Corporation - Phase 3 Factory Construction Project	Factory Building
348.	Procrystal Technology Co., Ltd. - Factory #1 Phase 3 Construction Project	Factory Building
349.	Hirose Tech Co., Ltd. V Lung-Tan Factory Construction Project - Electrical Engineering System	Factory Building
350.	BAOTEK Inc. - Factory & Office Building Construction Project	Factory Building
351.	Cheng Loong Corp., Hou-Li Factory V Unit 10 Factory Construction Works	Factory Building
352.	Te-Lin Enterprise Co., Ltd. V New Construction Project of Factory located at Lot no. 483-3, Kuang-Jung Section, Hsin-Chuang City	Factory Building
353.	Grand Dynasty Industrial Co., Ltd. V New Construction Project of Factory located at Lot no. 483-1, Kuang-Jung Section, Hsin-Chuang City	Factory Building
354.	Yeashin Develop Technology Co., Ltd. - New Construction Project	Factory Building
355.	UER Technology Corporation - New Construction Project	Factory Building
356.	Tungpei Industrial Co., Ltd. - Precision Bearing Factory (On-site Work)	Factory Building
357.	Taiwan Pxmart V Sha-Tien Factory	Factory Building
358.	Taipower Northern District Storage & Transportation Center - New Construction Project	Factory Building
359.	Shern Yeong Precise Optical Co., Ltd. - Factory Construction Project	Factory Building
360.	Heran Factory & Office Building Construction Project	Factory & Office
361.	Chiao Thai Hsing Enterprise Co., Ltd. V Yang-Mei Flour Factory Construction Project	Factory Building
362.	HTC Corporation - Taoyuan Kui-Shan Factory & Office Building Construction Project	Factory Building
363.	Changxingdao Shipyard	Shipyard
364.	Waigaoqiao Shipyard	Shipyard
365.	Changxingdao Shipyard 1# 2# Dockyard	Shipyard
366.	Changxingdao - Min-Pin Project	Shipyard
367.	Tainan High Speed Railway Station	HSR Station
368.	Taichung High Speed Railway Station	HSR Station
369.	Chiayi High Speed Railway Station	HSR Station
370.	Yen-Chao High Speed Railway Station	HSR Station
371.	Liu-Chia High Speed Railway Station	HSR Station
372.	Shin Kong Mitsukoshi Development V Tsoying Station Business Development Zone Project	Kaohsiung rapid transit
373.	Kaohsiung Rapid Transit Corp.	Kaohsiung rapid transit
374.	Kaohsiung Rapid Transit Corp. (Generator Contract)	Kaohsiung rapid transit
375.	Kaohsiung Rapid Transit Corp. - Operation Control Center	Kaohsiung rapid transit
376.	Kaohsiung Rapid Transit Corp. V Ta-Liao Depot Busway Replacement Project	Kaohsiung rapid transit
377.	Motor Control Panel Copper Busway Procurement (City Government) MRT Project, City Hall Station	City Hall MRT Station



Projects Reference List

No.	Project	Industry Type
378.	Taoyuan International Airport Access MRT System Construction Plan - CU02 Construction Bid V Plumbing & Electrical Work Project	Airport Access MRT System
379.	Taoyuan International Airport Access MRT System Construction Plan - CU03 Construction Bid V Plumbing & Electrical Work Project	Airport Access MRT System
380.	Taoyuan International Airport Access MRT System Construction Plan ¡V CE02 Construction Bid V Plumbing & Electrical Work Project	Airport Access MRT System
381.	Taipei Station V CL308/363/365/368/373 Bid	HSR Station
382.	Sung-Shan Station - Civil Engineering and Electrical Engineering Project; Tunnel Section from Kun-Yang Street to Keelung Road (Plumbing & Electrical Work and Joint Tender on Additional Busway System)	Sung-Shan Station
383.	Hsuehshan Tunnel - Busway Replacement Project	Tunnel
384.	Hsuehshan Tunnel - Busway Replacement Project (2)	Tunnel
385.	Hsuehshan Tunnel - Busway Replacement Project (3)	Tunnel
386.	Chiang Kai-shek International Airport	Aviation
387.	Evergreen Aviation Technology Corp., Hangar No. 2	Aviation
388.	Far Glory Air Cargo Terminal	Aviation
389.	Chiang Kai-shek International Airport, Radar Station	Aviation
390.	Civil Aeronautics Administration, North Terminal	Aviation
391.	Aerospace Industrial Development Corp., Hangar No. 6	Aviation
392.	Ho-Hsin Lotus Hill	Residential Building
393.	Zhishan Garden	Residential Building
394.	Lu-Kuang 2nd Village	Residential Building
395.	Galaxy Aqua City	Residential Building
396.	A Date in Tamsui	Residential Building
397.	Star of Lih Pao	Residential Building
398.	Tainan County Tang-Shan Village - New Construction Project	Residential Building
399.	World Garden ¡V Bridge Up To Zenith Construction Project Lih Pao Construction Co., Ltd. V Pan-Chiao City New	Residential Building
400.	Pan-Chiao Section, 30-story Residential & Commercial Building Construction Project	Residential Building
401.	Bao-Chan Construction Co., Ltd. V (Shen-Keng) New Construction Project	Residential Building
402.	Lan-Hai Phase 1 New Construction Project	Residential Building
403.	Huang Hsiang Construction Corporation V 20-story Building on Sung-Te Road Project	Residential Building
404.	Kaohsiung City Government, Economic & Trade Square	Residential Building
405.	Lien-Chu-Fang-Ting Lih Pao Construction Co., Ltd. V Pan-Chiao City New	Residential Building
406.	Pan-Chiao Section, 30-story Residential & Commercial Building Construction Project - Additional 2000A	Residential Building
407.	Lung-Huang Development Co., Ltd. - Sanchung City Yung-Te Section Construction Project	Residential Building
408.	Xinyi Residential Building	Residential Building
409.	Yueh-Sheng Building - New Construction Project Chung Yuet Group V New Construction Project of 12	Residential Building
410.	land lots located on No. 256, Yang-Chou Section, Lu-Chu Hsiang	Residential Building
411.	Huaku Development Co., Ltd. ¡V Jui-Kuang Section	Residential Building
412.	Farglory Land Development Co., Ltd. - M61 Project	Residential Building
413.	Kuan-Tu Star of the North	Residential Building
414.	MRT Xindian Line Depot - Joint Development Project (Mei-Ho City)	Residential & Commercial Building
415.	Kung-Hsieh Village, Feng-Shan District, Kaohsiung County - New Construction Project	Military Dependents Village
416.	Ilan County Government Administration Center - Military Dependents Village Construction Project	Military Dependents Village
417.	Southern Taiwan Science Park, Phase 2 Site Sewage Treatment Plant	Sewage Treatment Plant
418.	Peace Island Sewage Treatment Plant, Phase 1 New Construction Project	Sewage Treatment Plant
419.	Peace Island Sewage Treatment Plant, Phase 1 New Construction Project (Additional Works)	Sewage Treatment Plant
420.	Central Taiwan Park, Sewage Treatment Plant	Sewage Treatment Plant
421.	Taipei Gymnasium (Air-conditioning Works)	Sports Stadium
422.	Taipei Gymnasium (Plumbing & Electrical Works)	Sports Stadium
423.	Taipei Stadium (Hsin-Jui-Cheng)	Sports Stadium
424.	Pan-Chiao Neo Sky Dome - New Construction Project	Sports Stadium
425.	Pan-Chiao Neo Sky Dome - New Construction Project (435A Additional Works)	Sports Stadium
426.	MOEA Nan-Kang Exhibition Hall - New Construction Project	Exhibition Hall
427.	Le-Shan Radar Station	Radar Station
428.	Taipei Station Underground Shopping Street V High- & Low-voltage Electrical Equipment	Shopping Mall
429.	B&Q Nan-Kan Shopping Mall - New Construction Project (Electrical Works)	Shopping Mall
430.	Fubon A10 Xinyi District Shopping Mall & Hotel - New Construction Project	Shopping Mall
431.	Pingtung County Mi-Li Community ES Extra-high Voltage Construction Project	Substation
432.	Kaohsiung Extra-high Voltage ES Construction Project	Substation
433.	Yu-Ching-Tang	Cement Plant
434.	Indonesian Paper Mill	Paper Mill
435.	Lealea Group - Additional Project	Textile
436.	Nankang Software Park - Phase 3 New Construction Project	High Tech Factory
437.	Nankang Software Park - Phase 3 Busway System Construction Project	High Tech Factory
438.	Pu-Li Lingyen Mountain Temple V Central Hall Construction Project (Electrical Engineering System)	Temple
439.	AF-AUFN Program - Operation Zone Renovation Works	Military Barrack
440.	Army Hua-Shan Barrack	Military Barrack
441.	Taiwan Yen-Wan Skill Training Institute	Jailhouse
442.	Hsinchu City Funeral Parlor & Funeral Hall Construction Project V Plumbing & Electrical Engineering Project	Funeral Parlor
443.	Ta-Chia Township First Public Retail Market Renovation & Repair Plan Project	Market
444.	Shui-Yuan Market Repair & Renovation Project	Market
445.	Feng-Shan RT-MART, Feng-Shan City, Kaohsiung County - New Construction Project	Shopping Mall
446.	Tou-Fen RT-MART Factory Building - New Construction Project	Shopping Mall
447.	Da Dong Art Center, Feng-Shan City	Art Center
448.	Da Dong Art Center, Feng-Shan City V Phase 2	Art Center
449.	Hualian Creative Culture & Industrial Park V Air-conditioning & Electrical Equipment Project	Art Center
450.	Farglory Land Development Co., Ltd. - O3 Financial Center Construction Project	Financial Center
451.	Jia-Lin Junior High School, New Taipei City V School Campus Construction Project	School
452.	Kuang-Yang Science Park (Ching-Tien Factory) - New Construction Project	Electronic Industry
453.	Sunworld Dynasty Taipei Hotel - E & M System Improvement & Renewal Project (Electrical Engineering Works)	Bank, hotel, department store
454.	Songshan Tobacco Factory - Cultural Park BOT Program (Electrical Engineering Works)	Bank, hotel, department store
455.	Actron Technology Corporation - Factory Building Construction Project	Factory Building

Busbar trunking System

Low-Power



ZUCCHINI

BUSBAR TRUNKING SYSTEMS

CONDOTTO SBARRE PER PICCOLA-MEDIA FORZA MOTRICE

Realizzato in conformità alle norme CEI EN 60439-2 con conduttori in rame elettrolitico o in alluminio trattato galvanicamente sono opportunamente supportati da isolatori in materiale plastico autoestinguente. L'involucro in lamiera d'acciaio zincato a caldo secondo la normativa EN 10142 costituisce il conduttore di protezione (PE), oltre a conferire un'adeguata protezione ai carichi meccanici.
Grado di protezione IP 40 secondo le norme CEI EN 60529 elevabile a IP 55 con appositi manicotti di congiunzione ed otturatori equipaggiati di guarnizioni antinvecchiamento a garanzia dell'inalterabilità della tenuta.
Il condotto deve essere completo dei vari accessori di montaggio e delle relative staffe di sospensione.

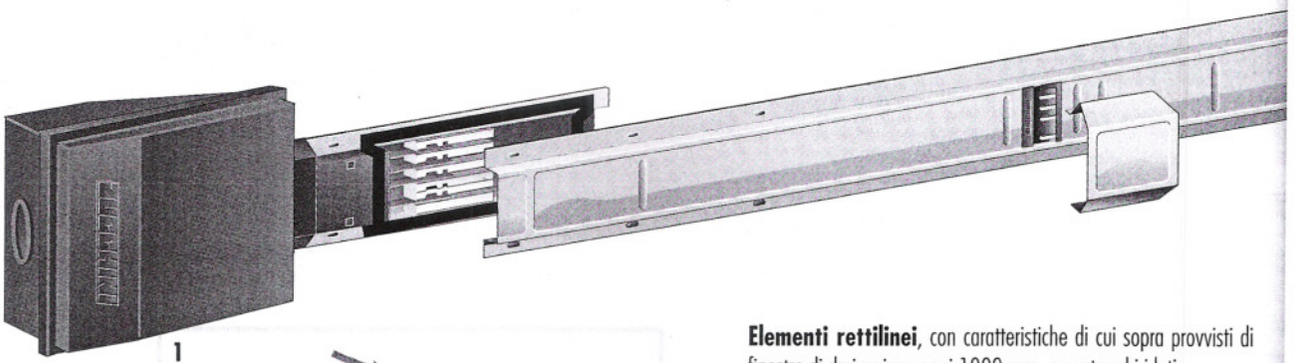

1

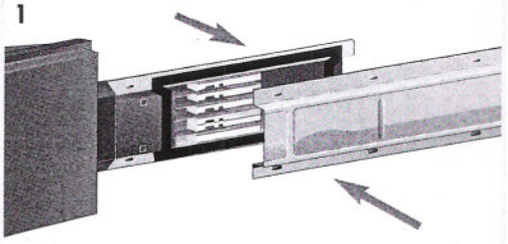

2

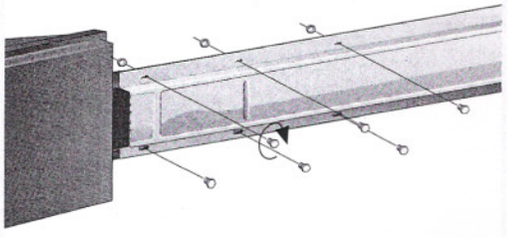

Elementi rettilinei, con caratteristiche di cui sopra provvisti di finestre di derivazione ogni 1000 mm. su entrambi i lati.
In tali condotti la giunzione meccanica opportunamente indipendente dalla giunzione elettrica garantisce la continuità del conduttore di protezione. Per le installazioni in verticale sono disponibili elementi con bloccabarre da utilizzarsi nelle colonne montanti superiori a 20 m. Le dilatazioni termiche non sono necessarie per l'MS perchè sono compensate dalla congiunzione. Gli elementi con setto spegnifiamma si utilizzano negli attraversamenti di pareti resistenti al fuoco.

Alimentazione di testata, completa di pressacavo e di morsetti per cavi da 70 mm^2.

Testata di chiusura, completa il montaggio della linea e garantisce il grado di protezione alla linea (IP40 o IP55).

Cassette di derivazione, complete di morsetti atti a ricevere cavi fino a 50 mm^2. Il corpo in materiale plastico autoestinguente, garantisce la buona resistenza meccanica e alla correnti striscianti. La Cassetta si può inserire e disinserire facilmente sotto tensione. Portate da 16A - 50A - 63A. L'apertura dello sportello della cassetta di derivazione svolge anche l'importante funzione di sezionare il circuito ad essa collegata.

MS

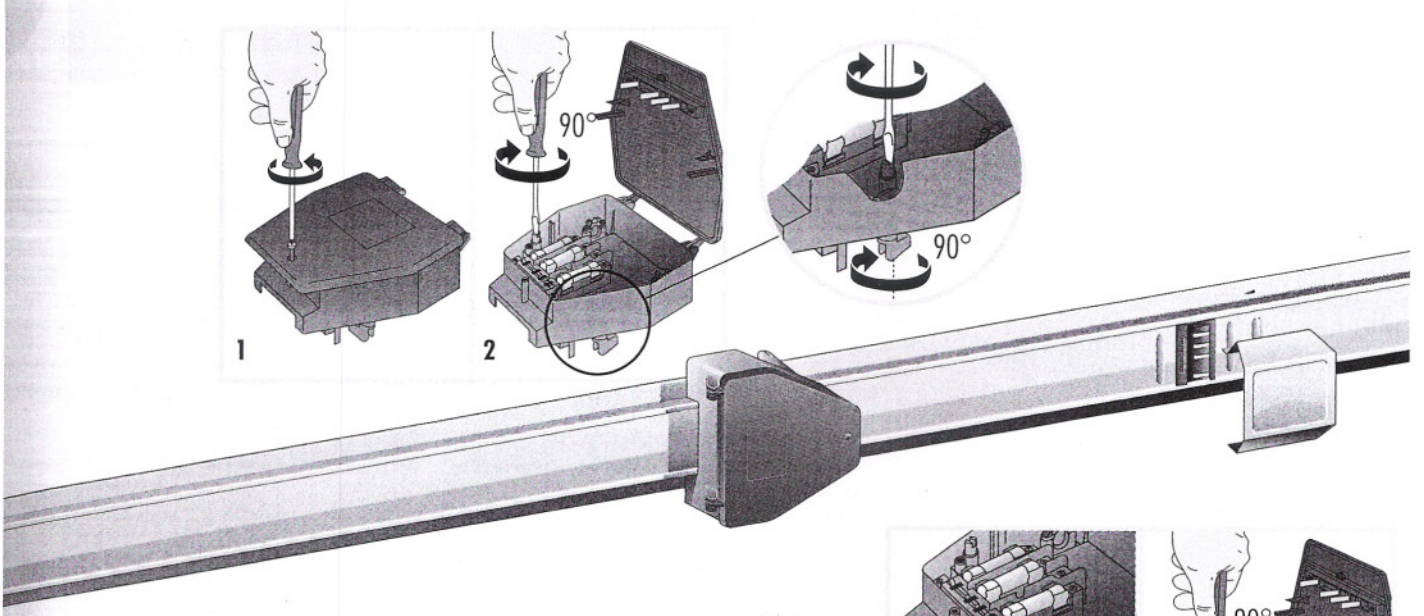

BUSBAR TRUNKING DISTRIBUTION FOR SMALL AND MEDIUM POWER

The MS low power busbar trunking system is manufactured in accordance with CEI EN 60439-1/2 standards.
The conductors are made from copper or in aluminium galvanized and they are fully insulated along their entire length by a protective, self-estinguishing insulating material. The casing, which is made from hot-galvanised sheet steel according to the EN 10142 standard, gives excellent mechanical rigidity whilst also acting as the protective conductor (PE).
The degree of protection is IP 40 which conforms to CEI EN 60529 standards and can be upgraded to IP55 with the addition of certain accessories including joint covers and plug outlet covers.

Straight lengths: in addition to the above mentioned features, straight lengths come with tap-off outlets positioned every 1000 mm. on both sides. In the case of rising main applications, special elements with thrust units can be supplied to allow the busbar trunking to be mounted vertically. Elements with fire-barriers are also available to allow the trunking to be installed through fire-resisting walls. The MS busbar trunking does not require expansion lengths since the jointing facility for each element allows for expansion within the length of any given run.

End feed units are supplied complete with cable clamps and terminals suitable for 70 mm² cable.

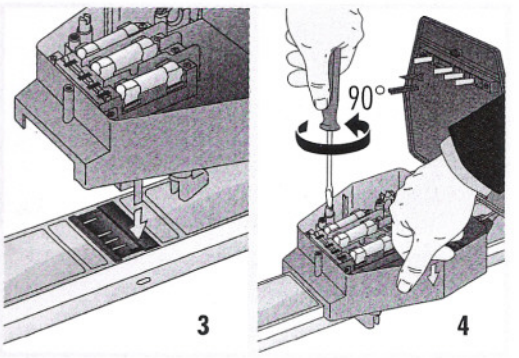

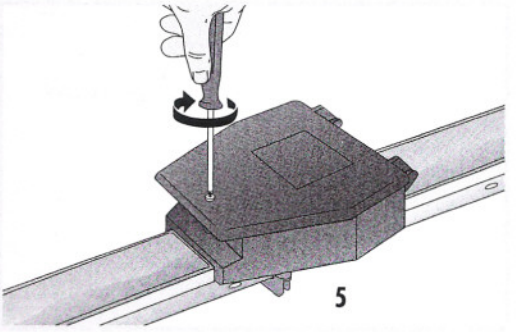

End covers are fitted to the last element of the run to maintain the degree of protection (IP40 or IP55).

Fusible TP+N tap-off units can by supplied in either 16A or 50A current ratings. 63A modular tap-off boxes to accept modular equipment (MCB's) are also available. Each tap-off comes with a self-exstinguishing high impact resistant plastic body. Tap-off units can be inserted or

ACCIAIO ZINCATO
GALVANIZED STEEL

Tutti i particolari componenti la linea (Elementi, alimentazione , giunti flessibili) possono essere forniti in versione verniciata

All components making up the busbar line (elements, feed units, joints) can be supplied in a painted version

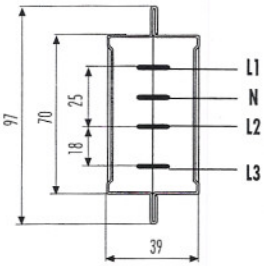

ELEMENTI RETTILINEI
STRAIGHT LENGTHS

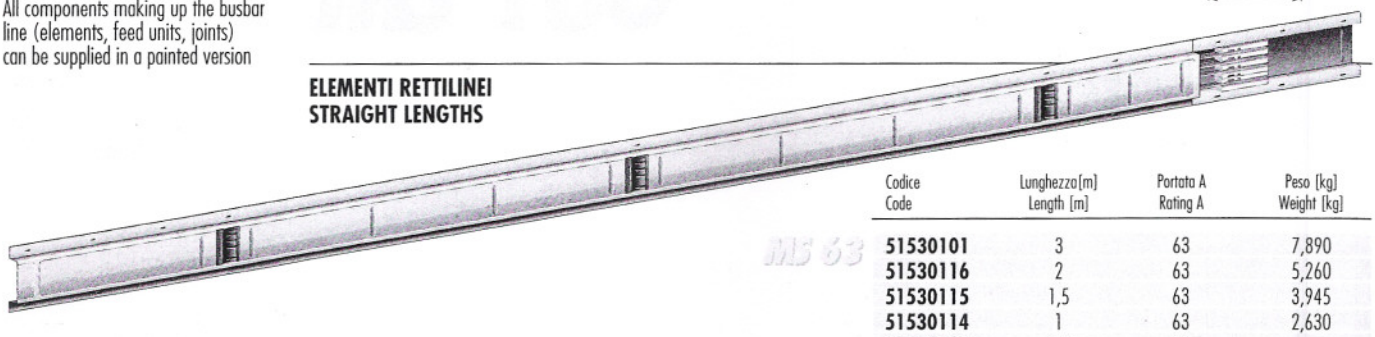

	Codice Code	Lunghezza [m] Length [m]	Portata A Rating A	Peso [kg] Weight [kg]
MS 63	**51530101**	3	63	7,890
	51530116	2	63	5,260
	51530115	1,5	63	3,945
	51530114	1	63	2,630
	51530112	< 1,5	63	-
	51530113	> 1,5	63	-
		ELEMENTI SPECIALI / SPECIAL ELEMENTS		
Elemento rettilineo con tagliafiamma / Straight length with fire barrier	**51530131**	3	63	7,990
Elemento rettilineo con blocca barre/ Straight length with thrust unit	**51530141**	3	63	7,890
MS 100	**51510101**	3	100	7,890
	51510116	2	100	5,260
	51510115	1,5	100	3,945
	51510114	1	100	2,630
	51510112	< 1,5	100	-
	51510113	> 1,5	100	-
		ELEMENTI SPECIALI / SPECIAL ELEMENTS		
Elemento rettilineo con tagliafiamma / Straight length with fire barrier	**51510131**	3	100	7,990
Elemento rettilineo con blocca barre/ Straight length with thrust unit	**51510141**	3	100	7,890
MS 160	**51520101**	3	160	9,290
	51520116	2	160	6,190
	51520115	1,5	160	4,645
	51520114	1	160	3,100
	51520112	< 1,5	160	-
	51520113	> 1,5	160	-
		ELEMENTI SPECIALI / SPECIAL ELEMENTS		
Elemento rettilineo con tagliafiamma / Straight length with fire barrier	**51520131**	3	160	10,29
Elemento rettilineo con blocca barre/ Straight length with thrust unit	**51520141**	3	160	9,290

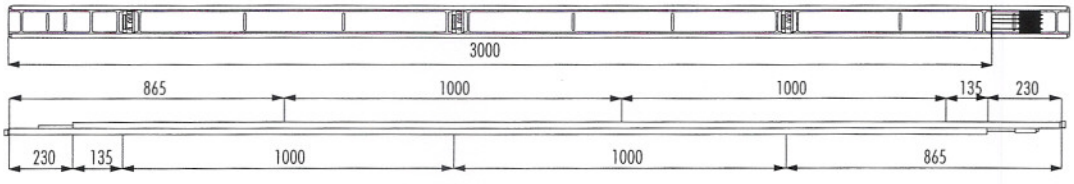

MS

ANGOLO ORIZZONTALE DX
HORIZONTAL ELBOW RH

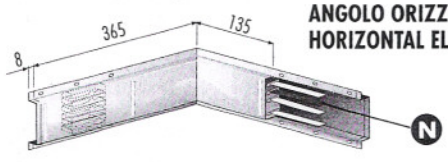

	Tipo Type	Codice Code	Peso [kg] Weight [kg]
MS 63	**IP 55**	**51530351**	1,600
MS 100	**IP 55**	**51500361**	1,600
MS 160	**IP 55**	**51520351**	2,600

ANGOLO ORIZZONTALE SX
HORIZONTAL ELBOW LH

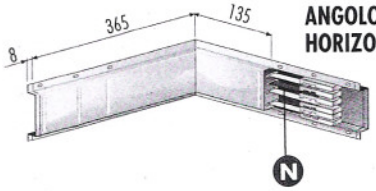

	Tipo Type	Codice Code	Peso [kg] Weight [kg]
MS 63	**IP 55**	**51530361**	1,600
MS 100	**IP 55**	**51500362**	1,600
MS 160	**IP 55**	**51520361**	2,600

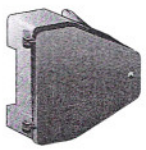

DERIVAZIONE 16A CON FUSIBILI (fusibili CH10, 10,3 x 38 non forniti)
16A TP & N FUSIBLE PLUG (without fuses)

Tipo Type	Codice Code	Peso [kg] Weight [kg]
IP 40	**51515001**	0,808
IP 55	**51515051**	0,908

• fusibili / fuse 10,3 x 38 not supplied

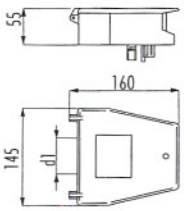

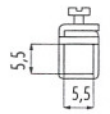

Cavo max sez. 10/25* mm²
Max cable size 10/25* mm²

(*) Con tubetto terminale
(*) With cable ferrule (not included)

Bocchettone utilizzabile Cable gland size		PG 21	PG 29
Foro d 1 Hole d 1	DIN	29	38
	mm	26	35
Cavi diametro esterno mm Cable diameter mm		15÷21	22÷30



DERIVAZIONE 50A CON FUSIBILI (fusibili 14 x 51 non forniti)
50A TP & N FUSIBLE PLUG (without fuses)

Tipo Type	Codice Code	Peso [kg] Weight [kg]
IP 40	**51515002**	0,908
IP 55	**51515052**	1,008

• fusibili / fuse 14 x 51 not supplied

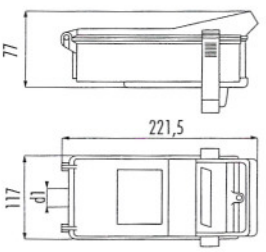

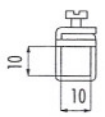

Cavo max sez. 35* mm²
Max cable size 35 mm²

Bocchettone utilizzabile Cable gland size		PG 21	PG 29
Foro d 1 Hole d 1	DIN	29	38
	mm	26	35
Cavi diametro esterno mm Cable diameter mm		15÷21	22÷30

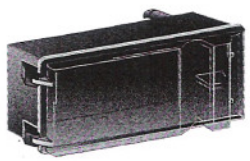

DERIVAZIONE 63A BASE CON COPERCHIO TRASPARENTE
63A TP & N PLUG BOX WITH TRANSPARENT COVER

Tipo Type	Codice Code	Peso [kg] Weight [kg]
IP 40	**51515007**	1,000
IP 55	**51515057**	1,100

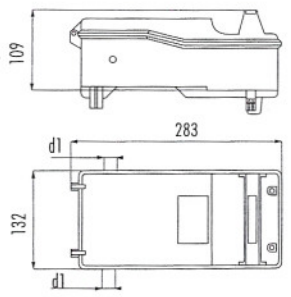

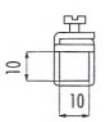

Cavo max sez. 35* mm²
Max cable size 35 mm²

Bocchettone utilizzabile Cable gland size		PG 21	PG 29	PG 36
Foro d 1 Hole d 1	DIN	29	38	42
	mm	26	35	45
Cavi diametro esterno mm Cable diameter mm		15÷21	22÷30	29÷37

MS

GE
Consumer & Industrial

WORLDWIDE PARTNER



Wave Cast

Cast Coil Transformers

GE imagination at work

Technical specifications

Standard products

		IEC	ANSI / IEEE
Phases		3	
Conductors		Copper or Aluminum	
Frequency (Hz)		50	60
Primary Voltages (kV)		Up to 35	
Secondary Voltages (kV)		Up to 10	
Power (kVA)		160 - 10,000	
Off-load tapping range		± 2 × 2.5%, ± 5% *	
Insulation class		F (155°C) or H (180°C)	150°C or 180°C
Ambient temperature (°C)	Max	≤40	
	Min	≥-5 (indoor), ≥-25 (outdoor)	≥-30
Altitude (m)		≤1,000	
Connection		Dyn5, Dyn11, YNd11, Yyn0 and others	
Cooling		AN, AN/AF, AF	AA, AA/FA, AFA

* Other taps are available on request.

Accessories / options

- Enclosures: IP20, IP21, IP23, NEMA 1, NEMA 3R and others
- Space heaters
- Thermostat for space heaters
- 120/240V fans for forced-air cooling ratings
- Temperature monitor/fan controller
- Rollers

Special design or application

- Larger power
- Higher Secondary Voltage
- Special ambient
- Special Altitude
- On-load tap changing
- High overload capacity
- Low loss
- Special short-circuit impedance
- Special using

Applicable standards

- IEC 60076-11
  Dry-type transformers
- IEEE C57.12.01

General technical conditions of dry-type and power transformers including those with solid-cast and/or resin-encapsulated windings

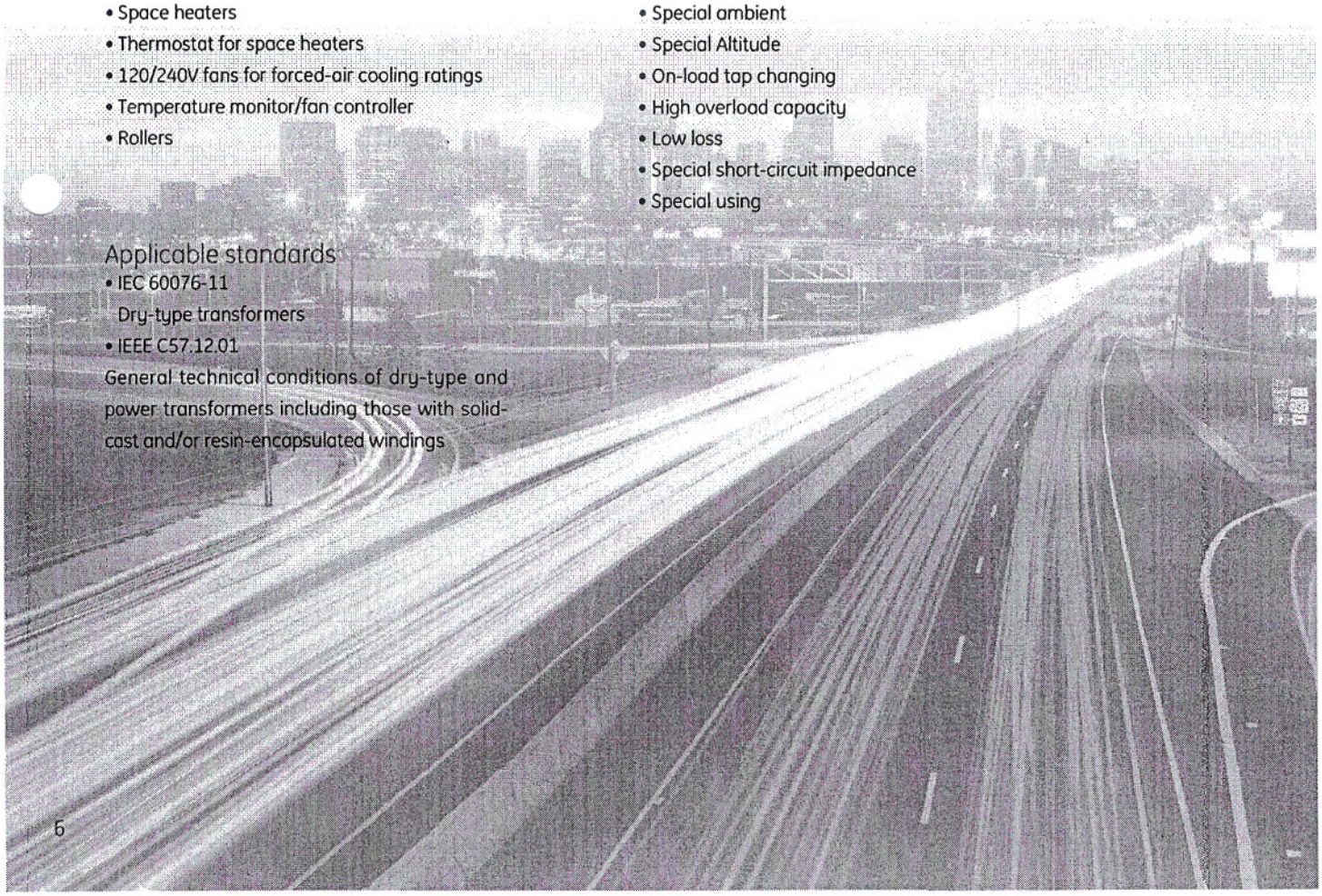

Technical specifications

Phase number	Frequency	Service condition	Taping range of HV winding	Connection symbol	Insulation class	Temperature rise limit
3	50 Hz	Normal condition according to IEC60076-11: 2007	±2 × 2.5% or ±5%	Dyn, Yyn, Yd, YNd	F	100K

Copper windings, distribution transformers

h.v. Um=12kV l.v. Um≤1.1kV

Rated Power	kVA	200	315	400	500	630	800	1000	1250	1600	2000	2500	3150
No-load Loss	W	700	1000	1080	1250	1300	1550	1800	2000	2600	3500	4100	5000
Load Loss 75°C	W	2280	2990	3520	4100	5300	6500	7210	8570	10700	12800	15400	20000
Load Loss 120°C	W	2600	3400	4000	4650	6000	7350	8100	9600	12000	14400	17000	22000
Short-circuit Impendence	%	4	4	4	4	6	6	6	6	6	6	6	6
Noise LPA	dB	48	48	48	50	50	52	52	52	54	56	58	60
Length	mm	1170	1230	1260	1310	1410	1470	1500	1580	1700	1890	2010	1970
Width	mm	750	750	750	750	750	920	920	920	920	920	1170	1270
Height	mm	930	1040	1110	1160	1170	1280	1400	1440	1570	1570	1620	1960
Weight	kg	1040	1330	1500	1750	2010	2310	2710	3190	3920	4930	5730	6400
Distance Between Rollers	mm	660	660	660	660	660	820	820	820	820	820	1070	1070

h.v. Um=24kV l.v. Um≤1.1kV

Rated Power	kVA		315	400	500	630	800	1000	1250	1600	2000	2500	3150
No-load Loss	W		1100	1200	1400	1500	1800	2100	2400	3000	3900	4400	5000
Load Loss 75°C	W		2720	4050	4920	6020	6520	7470	9440	12000	13700	17700	22700
Load Loss 120°C	W		3100	4600	5600	6800	7300	8400	10600	13500	15300	19500	25000
Short-circuit Impendence	%		4	4	4	6	6	6	6	6	6	6	6
Noise LPA	dB		50	50	52	52	54	54	54	56	58	60	62
Length	mm		1380	1370	1400	1530	1590	1650	1710	1850	2010	2100	2130
Width	mm		750	750	750	750	920	920	920	920	1170	1170	1270
Height	mm		1220	1290	1360	1360	1400	1500	1650	1760	1800	1830	2060
Weight	kg		1520	1620	1850	2080	2550	3050	3570	4500	5450	6070	7050
Distance Between Rollers	mm		660	660	660	660	820	820	820	820	1070	1070	1070

h.v. Um=40.5kV l.v. Um≤1.1kV

Rated Power	kVA					630	800	1000	1250	1600	2000	2500	3150
No-load Loss	W					1840	2100	2450	2800	3200	3900	4500	5500
Load Loss 75°C	W					5350	7100	8000	11600	12900	13900	20500	21500
Load Loss 120°C	W					6000	8000	9000	13000	14500	15500	22500	23500
Short-circuit Impendence	%					6	6	6	6	6	6	6	6
Noise LPA	dB					54	56	58	60	60	62	62	62
Length	mm					1670	1680	1770	1800	1890	1950	2100	2280
Width	mm					920	920	920	920	1270	1270	1270	1270
Height	mm					1560	1580	1620	1900	1960	2180	2180	2180
Weight	kg					2600	2800	3500	3900	4600	5700	6700	7700
Distance Between Rollers	mm					820	820	820	820	1070	1070	1070	1070

Other powers and voltages are available on request.

Technical specifications

Aluminum windings, distribution transformers

h.v. Um=12kV l.v. Um≤1.1kV

Rated Power	kVA	315	400	500	630	800	1000	1250	1600	2000	2500	3150
No-load Loss	W	900	1000	1200	1300	1600	1800	2300	2600	3300	4000	5000
Load Loss 75°C	W	3100	3500	4200	5380	6600	7800	8900	10800	12800	14500	19500
Load Loss 120°C	W	3500	4000	4800	6100	7500	8800	10000	11600	14000	16000	21000
Short-circuit Impendence	%	4	4	4	6	6	6	6	6	6	6	6
Noise LPA	dB	48	48	50	50	52	52	52	54	56	58	60
Length	mm	1310	1320	1350	1520	1560	1610	1680	1740	1860	2070	2130
Width	mm	750	750	750	750	920	920	920	920	920	1170	1170
Height	mm	1090	1200	1300	1310	1410	1550	1640	1800	1840	1890	2050
Weight	kg	1300	1500	1700	1880	2200	2580	3060	3760	4300	5500	6400
Distance Between Rollers	mm	660	660	660	660	820	820	820	820	820	1070	1070

h.v. Um=24kV l.v. Um≤1.1kV

Rated Power	kVA	315	400	500	630	800	1000	1250	1600	2000	2500	3150
No-load Loss	W	1200	1300	1500	1600	1700	2000	2400	3000	3800	4400	5200
Load Loss 75°C	W	2300	3500	4300	6350	7700	9000	9800	11200	13000	17000	22000
Load Loss 120°C	W	2600	3750	4900	7300	8700	10200	11000	12500	14500	19000	24000
Short-circuit Impendence	%	4	4	4	6	6	6	6	6	6	6	6
Noise LPA	dB	50	50	52	52	54	54	54	56	58	60	62
Length	mm	1470	1470	1490	1590	1620	1780	1770	1890	1980	2130	2210
Width	mm	750	750	750	920	920	920	920	920	1170	1170	1170
Height	mm	1350	1390	1410	1420	1520	1650	1770	1930	1960	2040	2180
Weight	kg	1550	1650	1900	2000	2150	2650	3300	4060	4850	5800	6900
Distance Between Rollers	mm	660	660	660	820	820	820	820	820	1070	1070	1070

Other powers and voltages are available on request.

Copper windings, power transformers

h.v. Um=40.5kV l.v. Um>1.1kV

Rated Power	kVA	1000	1250	1600	2000	2500	3150	4000	5000	6300	8000	10000	12500
No-load Loss	W	2700	3200	3600	4300	4500	5400	6500	8300	9000	11000	12800	14500
Load Loss 75°C	W	8500	10600	11200	13500	16000	21000	25000	3000	34000	40000	46000	55000
Load Loss 120°C	W	9600	12000	12800	15000	18000	24000	28000	34000	38000	47000	55000	62000
Short-circuit Impendence	%	6	6	6	7	7	8	8	8	8	9	9	9
Noise LPA	dB	58	60	60	61	61	62	62	63	63	65	65	67
Length	mm	1950	2010	2070	2150	2100	2430	2500	2760	2780	3000	3150	3300
Width	mm	920	920	920	1270	1270	1270	1270	1675	1675	1675	1675	1675
Height	mm	1700	1800	1880	1960	2180	2130	2260	2300	2370	2660	2750	2950
Weight	kg	3700	4500	5100	6150	6650	7850	9250	11500	13200	15300	18100	22500
Distance Between Rollers	mm	820	820	820	1070	1070	1070	1475					

Other powers and voltages are available on request. Aluminum windings are available as well.

Tests

Tests are performed in accordance with IEC60076-11 or IEEE C57.12.91.

Routine tests

Each cast coil transformer is submitted to a complete set of routine tests for ensuring transformer reliable.

- Measurements of winding resistance
- Measurement of voltage ratio and check of phase displacement
- Measurement of insulation resistance
- Measurement of short circuit impedance and load losses
- Measurement of no-load losses and current
- Separate-source AC voltage withstand voltage test
- Induced AC withstand voltage test
- Measurement of partial discharge

Type tests

Type test is performed in case of new design or important design modification in order to confirm that the quality of transformer is compliance to related standard. They can be carried out according to custom request.

- Temperature-rise test
- Lightning impulse test

Special tests

Always performed on request.

- Sound level test
- Short-circuit test

SCB transformers had pass the following tests:

- Short-circuit test at KEMA USA on one 2.5MVA transformer
- All the routine, type and special tests at CTQC (China Transformer Quality Center) on one 2MVA distribution transformer
- All the routine, type and special tests at CTQC on one 10MVA power transformer
- The C2 climatic class, E2 environmental class, F1 fire behaviour class tests at CTQC
- Vibration test withstand the acceleration ag of the horizontal 0.6g and vertical 0.3g at Tongji University

Standard insulation level

IEC

Highest Voltage for equipment Um (r.m.s) (kV)	Rated short duration separate source AC withstand voltage (r.m.s) (kV)	Rated lightning impulse withstand voltage (peak value) (kV)
≤1.1	3	-
3.6	10	40
7.2	20	60
12	28	75
17.5	38	95
24	50	125
36	70	170

ANSI/IEEE

Nominal Voltage (kV)	Low-frequency voltage insulation levels (r.m.s) (kV)	Basic lightning impulse insulation level (crest) (kV)
1.2	4	10
2.5	10	20
5	12	30
8.7	19	45
15	31	60
25	37	110
34.5	50	150

ANSI/IEEE standard sound level

Rated power (kVA)	Self cooled (db)	Fan cooled (db)
300	55	67
500	60	67
800	64	67
1000	64	67
1600	66	68
2000	66	69
2500	68	71
3150	70	71
5000	71	73

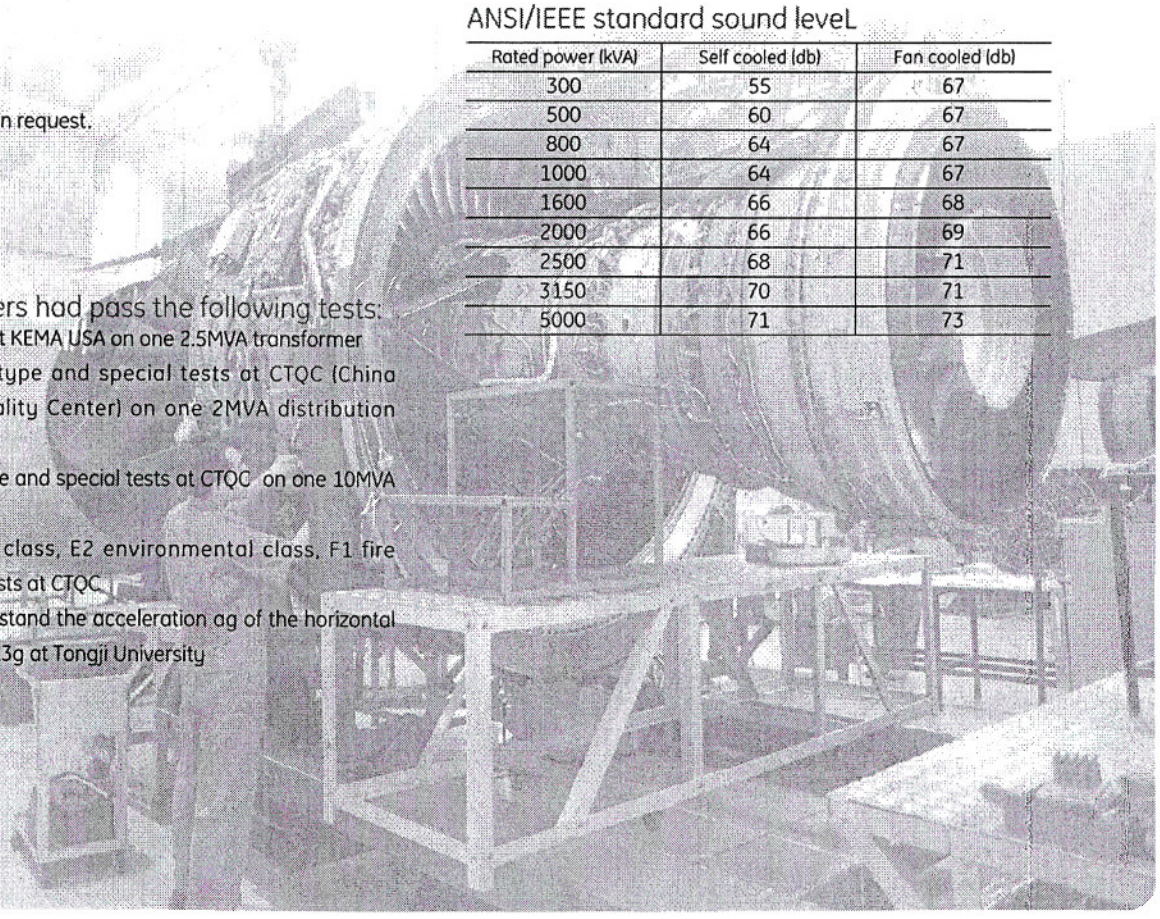

Certificates

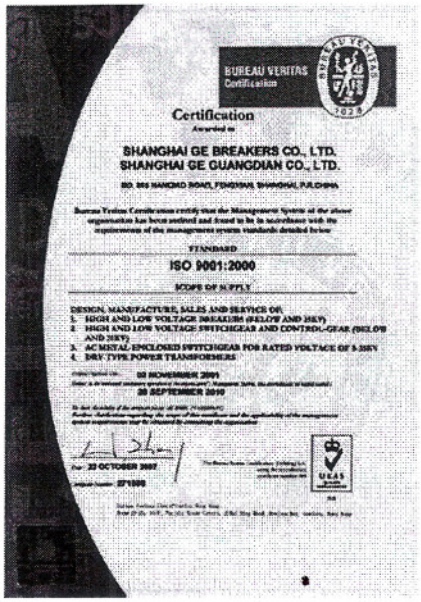
BUREAU VERITAS
Certification

Certification

SHANGHAI GE BREAKERS CO., LTD.
SHANGHAI GE GUANGDIAN CO., LTD.

STANDARD
ISO 9001:2000

SCOPE OF SUPPLY

DESIGN, MANUFACTURE, SALES AND SERVICE OF:
1. HIGH AND LOW VOLTAGE SWEAR (BELOW AND 35KV)
2. HIGH AND LOW VOLTAGE SWITCHGEAR AND CONTROL-GEAR (BELOW AND 35KV)
3. AC METAL-ENCLOSED SWITCHGEAR FOR RATED VOLTAGE OF 3.35KV
4. DRY TYPE POWER TRANSFORMERS

28 SEPTEMBER 2010

UKAS

ISO 9001:2000 Certification awarded by Bureau Veritas Certification (BVQI) Hongkong


KEMA

2.5MVA 12.47kV power transformer short-circuit test report at KEMA USA

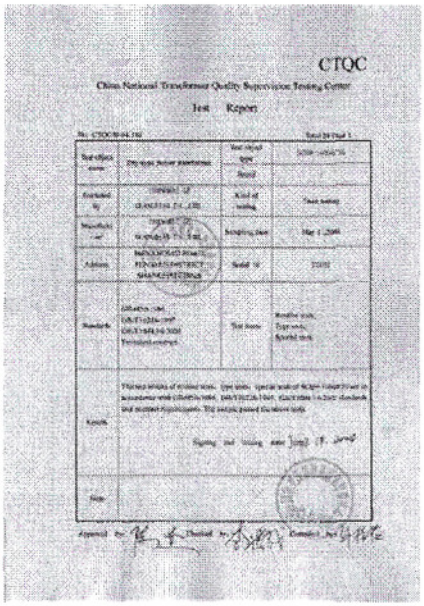
CTQC

China National Transformer Quality Supervision Testing Center

Test Report

10MVA 35kV power transformer test report at CTQC

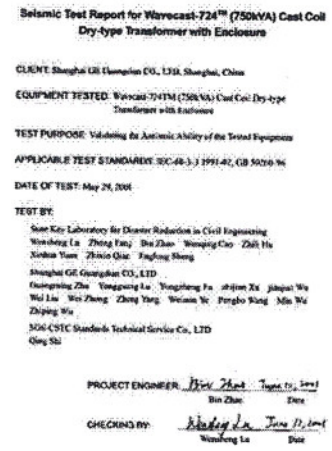
Seismic Test Report for Warecast-724™ (750kVA) Cast Coil Dry-type Transformer with Enclosure

CLIENT: Shanghai GE Guangdian CO., LTD, Shanghai, China

EQUIPMENT TESTED: Warecast-724TM (750kVA) Cast Coil Dry-type Transformer with Enclosure

TEST PURPOSE: Validating the Antiseismic Ability of the Tested Equipment

APPLICABLE TEST STANDARDS: IEC-68-3-3 1991-07, GB 50260-96

DATE OF TEST: May 29, 2004

TEST BY:

State Key Laboratory for Disaster Reduction in Civil Engineering
Wensheng Lu Zhong Fang Bin Zhao Wenqing Cao Zhifi Hu
Xinhua Yuan Zhixin Qiao Fenghua Shang

Shanghai GE Guangdian CO., LTD
Guangming Zhu Yonggang Lu Yongsheng Fu Jinjun Xu Jiaqui Wu
Wei Liu Wei Zhang Zheng Yang Weimin Ye Pengbo Wang Min Wu
Zhiping Wu

SGS-CSTC Standards Technical Service Co., LTD
Qing Shi

PROJECT ENGINEER: Bin Zhao June 11, 2004
Bin Zhao Date

CHECKING BY: Wensheng Lu June 11, 2004
Wensheng Lu Date

Vibration test report at Tongji University

GE Energy
Industrial Solutions

WORLDWIDE PARTNER



WavePro LT

Busway System

GE imagination at work

GE

GE is a diversified organization covering a myriad of market segments, including infrastructure, finance and media. From energy, water, transportation and health to access to money and information, GE serves customers in more than 100 countries and employs more than 300,000 people worldwide.

The company traces its beginnings from Thomas A. Edison, who established the Edison Electric Light Company in 1878. In 1892, a merger of Edison General Electric Company and Thomson-Houston Electric Company created the General Electric Company. GE is the only company listed in the Dow Jones Industrial Index today that was also included in the original index in 1896.

Industrial Solutions

GE Industrial Solutions – a division of GE Energy Group, is a global leading provider in power distribution, offering a wide range of products which include medium and low voltage power distribution equipments and components, and motor & control systems that are safe, reliable and offer high performance. Its innovative solutions can improve energy efficiency and environmental impact in power plants, power grids, oil & gas, mining, industrial manufacturing, rail transportation, commercial buildings, residential houses, alternative energy and many other industries.



GE is one of the worldwide partners of the Olympic Games. In 2008, GE assisted Beijing with this tremendous event, which was unprecedented in scale and first-class in its use of science and technology, offering a series of innovative solutions and products for around 400 Olympic infrastructure projects, covering fields in electricity distribution, lighting, security, water processing, benefiting some 37 Olympic venues and 168 commercial buildings. GE also brought its experiences to the 2010 Expo in Shanghai, Asia Games in Guangzhou, Vancouver Olympic Games and will continue through to the London 2012 Olympic Games.

WORLDWIDE PARTNER

USA PROUD PARTNER

BRITISH OLYMPIC ASSOCIATION PROUD PARTNER

TORINO 2006 WORLDWIDE PARTNER

Beijing 2008 WORLDWIDE PARTNER

FORTUNE 2010 WORLD'S MOST ADMIRED COMPANIES Industry Champion -- Ranked #1

2010 America's and World's Most Admired Companies

BusinessWeek

2009 Best Global Brand

FINANCIAL TIMES

2008 World's Most Respected Companies

BusinessWeek

2010 World's most innovative companies

BARRON'S

《BARRON'S》

2008 Most Respected Global Company

World's Best R&D COMPANIES

《R&D》

2007 World's Best R&D Companies

Quick Index

1 Quick Index

2 Reference Standards & Certificates

3 System Overview

4-5 Features of WavePro LT Busway System

6-7 Product Advantages

8-9 Cable and Wire Conversion

10 Electrical Characteristics

10 Grounding bar resistance of WavePro LT busway system

11 Short-circuit current ratings

11 Ambient temperature's influence on application

12 Resistance, reactance, impedance and voltage drop

13 Physical Data

13 Straight length

14 Plug-in straight length

15 Joint

16-17 Fittings

18-21 Fittings data

22-23 Flanged end

24 Flanged end details

25 End tap box and terminal cover

26 Flanged end cutout and hole pattern

27 Fire propogotion, fire proof

28 Wall flange

29 Bus plug

30-32 Accessories

33 Application

34-37 Installation

38-39 Ordering Information

40-41 Catalog Numbering System

GE's WavePro LT Busway System provides safe and reliable electrical distribution in commercial and industrial applications. WavePro LT Busway System reduces installation cost while providing superior performance for electrical contractors and end users.

Reference Standards

WavePro LT busway system complies with:

IEC 60439.1
IEC 60439.2
IEC 60529
GB 7251.1
GB 7251.2

Certificates

The WavePro LT busway has been issued certificates from KEMA-KUER, following successful testing according with IEC standards.


KEMA
CERTIFICATE
KEMA KEUR


KEMA


KEMA
CERTIFICATE
KEMA KEUR


KEMA

System Overview



WavePro LT busway system is a flexible and reliable electrical distribution system with a sandwich construction and superior performance. It is a safe and robust system with high electrical efficiency, low temperature rise, efficient heat dissipation, low voltage drop, high mechanical strength and ease of installation. It is suitable for alternating current three-phase three-wire, three-phase four-wire and three-phase five-wire power supply and distribution system, with the frequency 50～60Hz, rated working voltage up to 690V, rated insulation voltage up to 1000V, and rated working current 100-5000A.



WavePro LT busway system makes a logical choice for commercial and industrial electrical distribution applications that require up to 5,000 amps of capacity with short-circuit protection. It's one of the lightest busway systems in the industry, considering customer requirements for installation and system reliability.



WavePro LT busway system provides internal neutral busbar 100% or 200%, which can meet with the requirements of various power systems for eliminating harmonic effects in the installations where non-linear loads are present. The housing, made from low magnetic material (aluminium and magnesium alloy), will not produce hysteresis loss on the distribution system.



As one of high current carrying capacity power transmission and distribution solutions, WavePro LT busway system can be widely applied in the areas of industrial factories, commercial buildings, hospitals, power generation, oil & gas, data centre applications, etc.

Features of WavePro LT Busway System

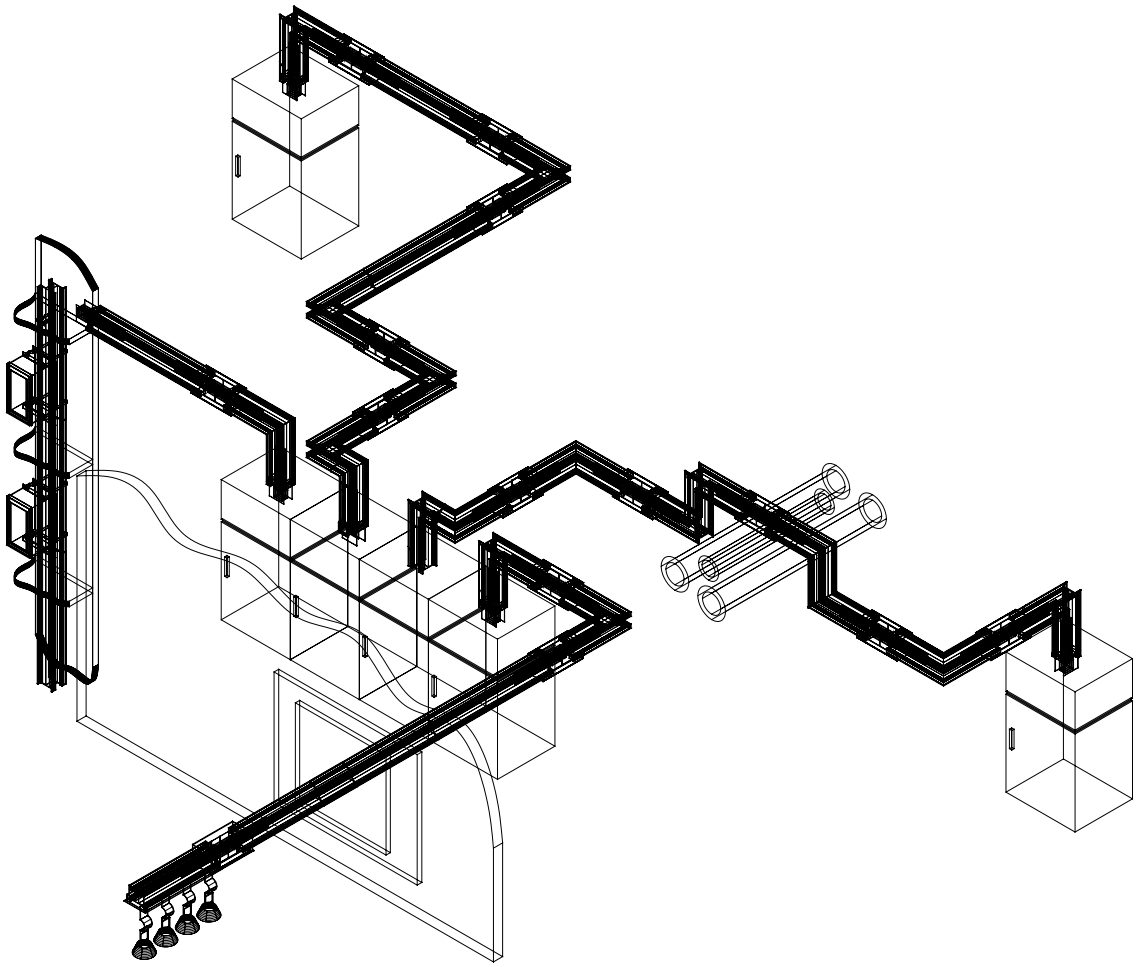

Safety Feature of the Bus Plug

- The operating handle of plug can be installed on the top or side with accurate opening or closing indication.
- The padlock mechanism is set for protecting the plug from mal-operation and any unauthorized access.
- Plug outlet covers prevent unintentional contact of the busbar.
- Plug in units are automatically grounded on installation. Polarized engagement of the plug to the busway provides the installer with positive plug/phase alignment.
- Bus plugs are provided with internal interlocking mechanisms to prevent their doors from being opened whilst energized, ensuring operation safety.



Compact Design Means Flexibility

- The compact "sandwich" design saves space with minimum voltage drop, specially designed to fit into the tight angle and height requirements of today's architectural space, between floors and along walls.
- The conductor is fully enclosed with the aluminium housing, which provides excellent heat dissipation, thus improving the power transmission efficiency and reducing voltage drop.





Robust Housing with Light-Weight Feature

- With light-weight, aluminum alloy housing, the unique design can fit your specific application with high flexibility, safety and reliability.
- The powder coated aluminum alloy housing has been tested to withstand the salt spray test.
- The aluminum alloy housing is corrosion resistant, providing high heat dissipation and an extremely low impedance ground path, with 50% grounding capacity.

Reliable Insulation

- Busway system utilizes high performance tin-plated or silver-plated copper or tin plated aluminium conductor, and provides high quality protection from corrosion and high conductivity at the contact surface.
- The conductive busbar is wholly wrapped in polyester film insulating material, providing significant insulation level and resistance to impact.
- The insulating material meets the requirements of RoHS, and safety requirements of GE.





Ease of Installation

- The joint assembly's cone-shaped insulation plate design increases mechanical strength while its molded joint ground side plate ensures even pressure applied across the joint.
- Large sized Belleville washers assure even pressure on contact .
- No special torque wrench is required. Just a common 16mm socket wrench is used to fasten the fixed captive torque bolt with red indication disc. (When the indicating disc falls off, the joint is properly tightened automatically).
- ±4mm per joint field adjustable isolation allows for job site flexibility during installation.

Product Advantages



WavePro LT busway features an aluminum housing that cuts busway weight up to 50% – reducing installation costs.



WavePro LT Busway busbars are completely wrapped with two layers of polyester insulation material, up to class B (130˚C).



Numerical control machinery is used to precision polish-saw all busbar ends.
The resulting high quality bus end finish does not suffer from the deformed, stretched, inconsistent flat end-surfaces common with punched busbar at the most critical interconnection joint locations.

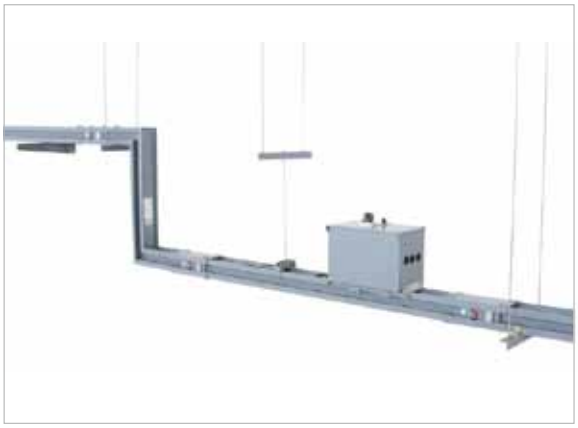

Sections can be hung every 2m with a standard trapeze hanger up to 2000 amp aluminum or 1600 amp copper. For high amp rating busway, please contact with our engineer for the trapeze hanger installtion. WavePro LT busway is light enough to reduce ceiling loads up to 50%.



For secure flexible long-term reliability and minimal maintenance, WavePro LT busway offers up to ±4mm adjustable joints with Belleville spring washers that do not require re-torquing.
And the double headed "break off" joint bolt is used to tighten the busway without the use of a torque wrench. Every busway joint is provided with color coded temperature indicator to give an early warning when high temperature occurs at the joint.

Cable and Wire Conversion

Busway is quick and easy to install. Using busway can save up to 30% of the total cost of using cable. And it takes approximately half the time to install compared with cable.

High overload capacity: all insulation materials used in busway is up to Class B (130℃) while cable is generally rated at 95℃ and 105℃. Therefore, the overload capacity of the busway is much higher than that of cables.

WavePro LT has good heat dissipation performance; insulating layers of cables (core insulation and outer insulation) are insulating electrically as well as thermally, while the busway disperses heat through convection and radiates heat through the tightly connected housing. Busway has superior heat dissipation performance compared with cable.

WavePro LT busway weight

Weight: (kg/m)

Rated current (A)	Copper busbar 4W	Copper busbar 5W	Aluminium busbar 4W	Aluminium busbar 5W
100	-	-	8.8	9.2
160	-	-	8.8	9.2
200	-	-	8.8	9.2
250	13.4	14.4	8.8	9.2
400	13.4	14.4	9.9	10.3
500	-	-	11.0	11.5
630	14.8	15.9	12.0	12.7
800	17.4	18.8	14.1	15.0
1000	24.1	26.1	15.8	16.8
1250	27.9	30.5	18.9	20.1
1350	-	-	20.5	22.0
1600	34.4	37.8	23.5	25.18
2000	47.0	51.8	26.9	29.0
2500	59.3	65.5	33.4	36.22
3150	72.6	80.2	-	-
3200	-	-	48.0	51.9
3800	85.7	94.8	57.9	62.8
4000	91.0	100.6	62.3	67.6
4500	114.6	126.9	-	-
5000	125.1	138.6	-	-

table.8-1

2000A,3P4W

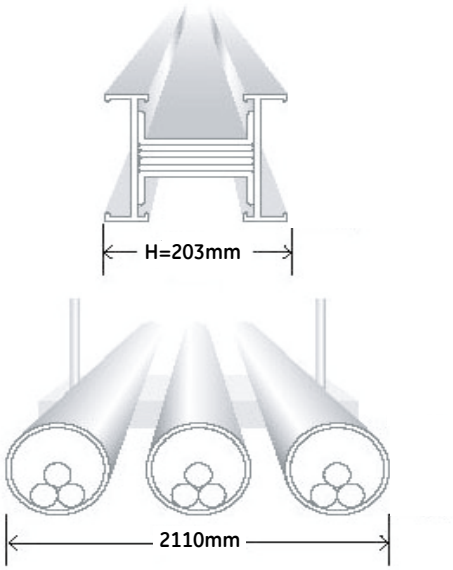

fig.8-1

WavePro LT busway dimension

Size: mm

Rated current (A)	Copper busbar (H)	Aluminium busbar (H)
100	-	88
160	-	88
200	-	88
250	88	88
400	88	98
500	-	108
630	93	118
800	103	138
1000	128	153
1250	143	183
1350	-	198
1600	168	228
2000	218	258
2500	263	323
3150	340	460
3200	-	460
3800	390	550
4000	410	590
4500	500	-
5000	540	-

table.8-2

Typical application of cable and busway system

Below are the drawings to show the differences of typical application between cable and busway system. Cable system requires one separate calbe for each power terminal. Busway system uses a main power supply busway and separates the current close to the power terminal. It saves installation space and make the whole system more safe.

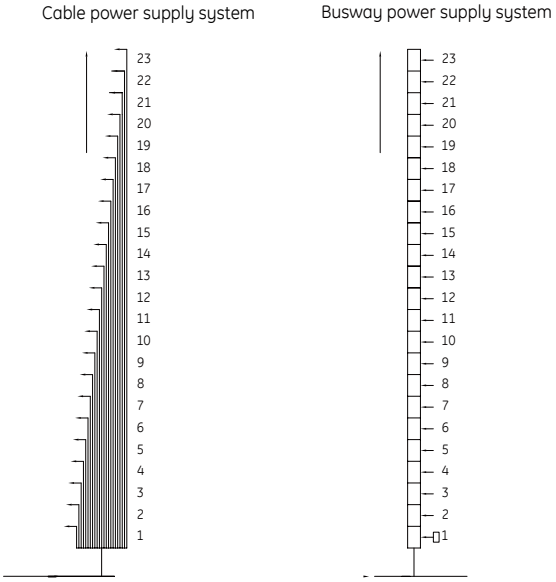

fig.9-1

Item	Busway	Cable
From transformer to incoming cubicle	Max current of busway is up to 5000A, and can match transformers up to 2.5MVA. Busway is 100% load rated and in its own housing, with ground.	Higher currents require additional cables per phase, installed in separate housings and derating. Additional cable ground is required.
Power supply control of multistage buildings	Riser busways for distributed power to each floor enables reduced switchboard sizing.	Multiple circuits are required to each floor requiring larger riser space and multiple MCCB's in the main siwtchboard.

table.9-1

Performance and price comparision of busway and cable

Item	Description	Busway	Cable
1	Long-term investment cost	Less than cable 50～60%, less than branch cable 60～70%.	Higher than bus 50～60%
2	Depreciation Rate (Annually)	2%	5～8%
3	Life	50 years	15～20 years
4	Insulation performance	⩾20MΩ	⩾5MΩ
5	Alteration loss rate	10～20%	70～80%
6	Occupying area	Reduced size	Large cable tray sizing
7	Current carrying capacity	Large current up to 5000A, applicable for many circumstances.	Mulitple cables per phase to suit current required, up to 1600A, poor application range.
8	Mechanical strength	Strong mechanical strength, high protection degree, applicable for large span installation.	Cable tray must be added.
9	Feature and dimension	Customized color, small volume, sandwich configuration.	Large volume
10	Current branch	Offering multi plug outlets for plug to increase branch circuits without disconnecting power supply, easy installation.	Main power supply and cable must be disconnected.
11	Over loading capacity	Maximum temperature of insulation material is 130℃, short time over load capacity, excellent heat dissipation.	Maximum operation temperature of insulation lagging and outer coating 105℃, poor over loading capacity.
12	Installation and maintenance	Easy installation and disassembly, positive to do electric check for branch circuit without disconnecting main power supply.	The main power supply has to be disconnected down when checking either of the branch circuit.
13	Maintenance	Easy maintenance, without maintenance degradation.	Difficult maintenance, with maintenance degradation.
14	Flexibility	Spare circuit bus plug helps recover power supply during system error, steady power supply system, flexible for extension and upgrade.	Negative to do electric check during accident, delayed power recovery.

table.9-2

Electrical Characteristics

WavePro LT busway's all-aluminum and aluminum alloy housing provide an extremely low impedance ground path with small resistance (reduce watt losts) for both copper and aluminum systems.
Plug-in outlet grounding is supplied with tin-plated copper tabs bolted to the plug in box housing for superior continuity through standard bus plug ground stabs. Optional internal ground busbar (50% or 100% capacity) is also available to provide a complete system.

Grounding bar resistance of WavePro LT busway system (temperature=20℃):

DC resistance copper bar (Internal 50% ground bus)

No.	Rated current (A)	Resistance ($10^{-6}\Omega$/m)
1	250	207.9
2	400	207.9
3	630	179.1
4	800	141.1
5	1000	94.2
6	1250	81.0
8	1600	64.3
9	2000	46.7
10	2500	37.6
11	3150	28.9
12	3800	24.8
13	4000	23.3
14	4500	18.8
15	5000	17.4

table.10-1

DC resistance copper bar (Internal 50% ground bus + Integraded housing ground)

No.	Rated current (A)	Resistance ($10^{-6}\Omega$/m)
1	250	104.0
2	400	104.0
3	630	89.6
4	800	70.5
5	1000	47.1
6	1250	40.5
8	1600	32.1
9	2000	23.3
10	2500	18.8
11	3150	14.4
12	3800	12.4
13	4000	11.7
14	4500	9.4
15	5000	8.7

table.10-2

DC resistance aluminium bar (Internal 50% ground bus)

No.	Rated current (A)	Resistance （$10^{-6}\Omega$/m）
1	100	342.7
2	160	342.7
3	200	342.7
4	250	342.7
5	400	259.8
6	500	210.7
7	630	178.1
8	800	138.0
9	1000	119.4
10	1250	95.2
11	1350	86.1
12	1600	73.4
13	2000	63.3
14	2500	50.4
15	3150	35.0
16	3200	35.0
17	3800	28.6
18	4000	25.2

table.10-3

DC resistance aluminium bar (Internal 50% ground bus + Integraded housing ground)

No.	Rated current (A)	Resistance （$10^{-6}\Omega$/m）
1	100	171.3
2	160	171.3
3	200	171.3
4	250	171.3
5	400	129.9
6	500	105.3
7	630	89.0
8	800	69.0
9	1000	59.7
10	1250	47.6
11	1350	43.0
12	1600	36.7
13	2000	31.7
14	2500	25.2
15	3150	17.5
16	3200	17.5
17	3800	14.3
18	4000	12.6

table.10-4

Short-circuit current ratings

The WavePro LT busway provides predictable, consistent strength and high short-circuit ratings.
WavePro busway is third party certified by KEMA to be in compliance with IEC60439-1 and-2 short circuit withstand test for 1 second.

Copper conductor

Rated current (A)	Rated short-time withstand current (kA)	Rated peak withstand current (kA)
250～800	30	63
1000～1600	50	105
2000～2500	65	143
3150～5000	100	220

table.11-1 Icw@1s

Aluminium conductor

Rated current (A)	Rated short-time withstand current (kA)	Rated peak withstand current (kA)
100～250	10	17
400～500	20	40
630～800	30	63
1000～2500	50	105
3150～4000	80	176

Icw@1s

table.11-2

Ambient temperature's influence on application

Within the ambient temperature of 35℃, WavePro LT busway system can continuously operate at rated current while the maximum housing temperature rise won't exceed 55K.
If the busway continuously operated at higher ambient temperature, it should be derated first, i.e. the busway current-carrying capacity = rated current x de-rating factor. (As shown in tables)

Ambient temperature (℃)	Factor
35	1.00
40	0.95
45	0.90
50	0.85
55	0.80
60	0.74
65	0.67

table.11-3

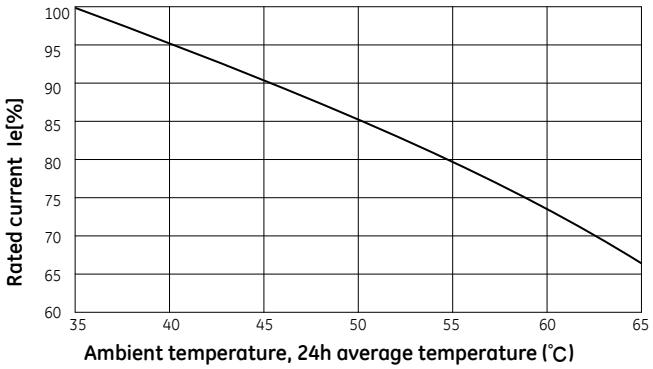

table.11-4

Electrical Characteristics

Resistance, reactance, impedance and voltage drop

WavePro LT busway has low voltage-drop values. Minimum reactance (X) is due to very close bar spacings (sandwiched construction) and a non-magnetic housing. Values shown are identical for plug-in and feeder.
50Hz values shown. For 60Hz, multiply reactance (X) by 1.2048 and resistance values do not change. For 400Hz, multiply reactance by 4.6988 and multiply resistance by 1.4. Calculate new voltage drop Vd=amps load × 3 (R cos Q + X sin Q) m, where cos Q=Power Factor. Contact your local GE representative for help with electrical calculations.

Copper busbar (temperature=20℃)

Rated current (A)	Resistance	Reactance	Impedance	Voltage drop (V/m) Power factor cos ϕ				
	($10^{-6}\Omega$/m)			0.6	0.7	0.8	0.9	1.0
250	104.0	35.3	109.8	0.039	0.042	0.045	0.047	0.045
400	104.0	35.3	109.8	0.063	0.068	0.072	0.076	0.072
630	89.6	32.1	95.1	0.087	0.093	0.099	0.103	0.098
800	70.5	27.4	75.7	0.089	0.095	0.101	0.105	0.098
1000	47.1	20.7	51.4	0.078	0.083	0.087	0.089	0.082
1250	40.5	18.3	44.4	0.084	0.089	0.094	0.096	0.088
1600	32.1	15.7	35.8	0.088	0.093	0.097	0.099	0.089
2000	23.3	12.5	26.5	0.083	0.087	0.091	0.092	0.081
2500	18.8	10.7	21.6	0.086	0.090	0.093	0.094	0.081
3150	14.4	9.5	17.3	0.089	0.092	0.094	0.094	0.079
3800	12.4	6.5	14.0	0.083	0.087	0.091	0.092	0.082
4000	11.7	6.3	13.3	0.083	0.088	0.091	0.092	0.081
4500	9.4	5.4	10.8	0.078	0.081	0.084	0.084	0.073
5000	8.7	5.0	10.0	0.080	0.084	0.086	0.087	0.075

table.12-1

Aluminium busbar (temperature=20℃)

Rated current (A)	Resistance	Reactance	Impedance	Voltage drop (V/m) Power factor cos ϕ				
	($10^{-6}\Omega$/m)			0.6	0.7	0.8	0.9	1.0
100	171.3	35.3	174.9	0.023	0.025	0.027	0.029	0.030
160	171.3	35.3	174.9	0.036	0.040	0.044	0.047	0.047
200	171.3	35.3	174.9	0.045	0.050	0.055	0.059	0.059
250	171.3	35.3	174.9	0.057	0.063	0.069	0.073	0.074
400	129.9	29.5	133.2	0.070	0.078	0.084	0.090	0.090
500	105.3	25.6	108.4	0.072	0.080	0.086	0.092	0.091
630	89.0	22.8	91.9	0.078	0.086	0.093	0.098	0.097
800	69.0	19.1	71.6	0.079	0.086	0.092	0.098	0.096
1000	59.7	17.1	62.1	0.086	0.093	0.100	0.106	0.103
1250	47.6	14.5	49.8	0.087	0.094	0.101	0.107	0.103
1350	43.0	13.6	45.1	0.086	0.093	0.100	0.105	0.101
1600	36.7	12.1	38.7	0.088	0.095	0.102	0.106	0.102
2000	31.7	10.9	33.5	0.096	0.104	0.110	0.115	0.110
2500	25.2	9.1	26.8	0.097	0.104	0.111	0.116	0.109
3150	17.5	5.8	18.5	0.083	0.089	0.095	0.100	0.096
3200	17.5	5.8	18.5	0.084	0.091	0.097	0.102	0.097
3800	14.3	5.0	15.2	0.083	0.089	0.095	0.099	0.094
4000	12.6	4.8	13.5	0.079	0.085	0.090	0.093	0.087

table.12-2

Note:
① Actual voltage drop= Vd (from Table) × $\frac{\text{actual load}}{\text{rated load}}$

② 1 feet=0.3048m
Get the data/feet, please multiply the data with 0.3048.

Physical Data

Straight length

Feeder straight length

Feeder straight lengths may be installed either vertically or horizontally.

Standard length is 3000mm, and the minimum length is 400mm.

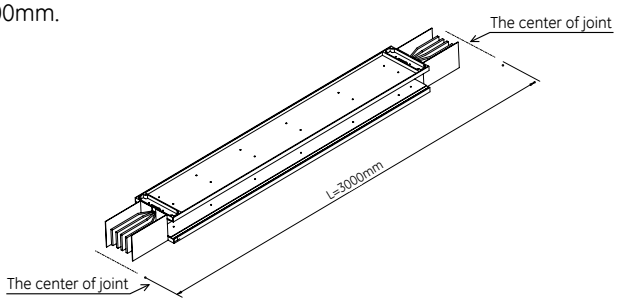

fig.13-1

Dimensions and weight

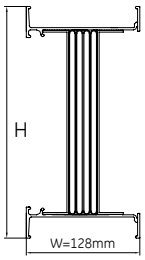

fig.13-2

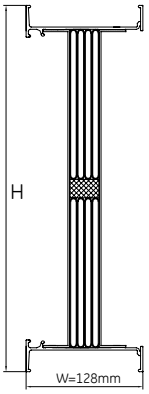

fig.13-3

Copper busbar

Rated current (A)	Width W (mm)	Height H (mm)	Weight of busbar (kg/m) with joint		Fig.
			Four-wire 100%N	Five-wire 100%N, 50%PE	
250	128	88	13.4	14.4	13-2
400	128	88	13.4	14.4	
630	128	93	14.8	15.9	
800	128	103	17.4	18.8	
1000	128	128	24.1	26.1	
1250	128	143	27.9	30.5	
1600	128	168	34.4	37.8	
2000	128	218	47.0	51.8	
2500	128	263	59.3	65.5	
3150	128	340	72.6	80.2	13-3
3800	128	390	85.7	94.8	
4000	128	410	91.0	100.6	
4500	128	500	114.6	126.9	
5000	128	540	125.1	138.6	

table.13-1

Aluminum busbar

Rated current (A)	Width W (mm)	Height H (mm)	Weight of busbar (kg/m)		Fig.
			Four-wire 100%N	Five-wire 100%N, 50%PE	
100~250	128	88	8.8	9.2	13-2
400	128	98	9.9	10.3	
500	128	108	11.0	11.5	
630	128	118	12.0	12.7	
800	128	138	14.1	15.0	
1000	128	153	15.8	16.8	
1250	128	183	18.9	20.1	
1350	128	198	20.5	22.0	
1600	128	228	23.5	25.18	
2000	128	258	26.9	29.0	
2500	128	323	33.4	36.22	
3150	128	460	48.0	51.9	13-3
3200	128	460	48.0	51.9	
3800	128	550	57.9	62.8	
4000	128	590	62.3	67.6	

table.13-2



table.13-4

Physical Data

Plug-in straight length

Plug-in busway has a flexible design with optional plug outlets on both sides. The minimum space between plugs is 610mm and up to 4 plug outlets may be fixed on each side of the 3-meter standard length. The customer may reserve plug outlets for extension in the future when changes occurs in terms of the equipment load or busway run. The plug-in busway may be installed either vertically or horizontally.
Both base plate and socket cover are set for each plug outlet. The former helps to prevent fingers from contacting live conductors (IP2X) by accident, on which the phase sequences of conductors are identified. And the latter prevents the conductive contacting surface from ingress of dust or contaminant . A pad may be used to keep off dust or moisture.
Standard length is 3000mm, and the minimum length is 400mm. The standard length of L1 (distance from the center of plug outlet to standard end) is 600mm, and the standard length of L2 (distance between the centers of two adjacent plug outlets) is 610mm.

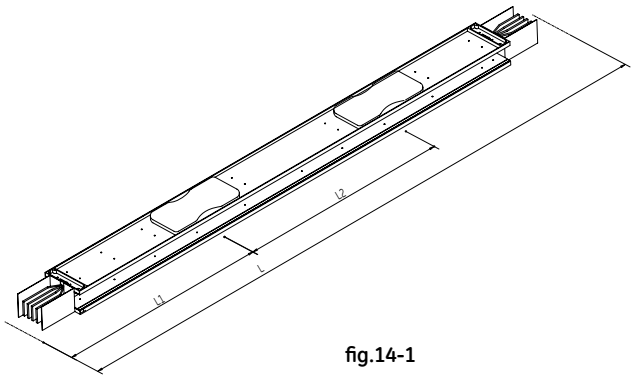

fig.14-1

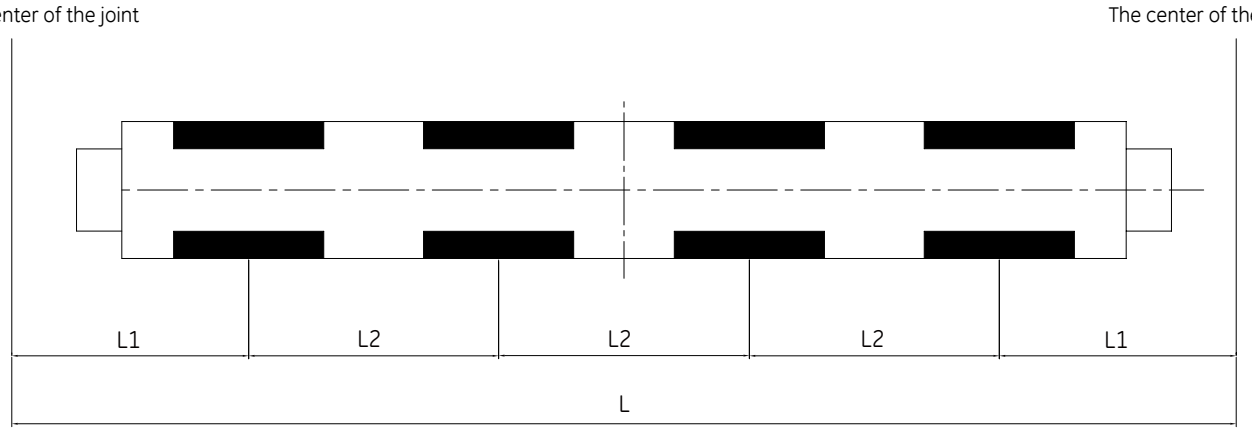

fig.14-2



fig.14-3

Joint

WavePro LT busway system adopts the double-headed torque limiting joint bolt. When the bolt is properly tightened, the top bolt head will break off so as to ensure the correctness of installation.
The joint has ±4mm adjustments for both side busway.
The connection cover plate avoids excessive adjustment of the joint. The joint may be safely removed without obstructing the adjacent length.

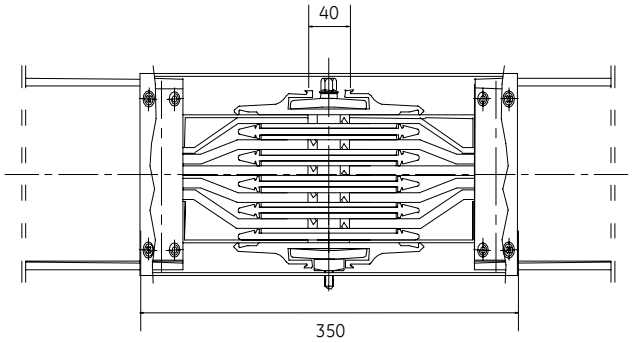

fig.15-1

Double-headed torque limiting joint bolt

This bolt is the standard joint bolt offered for all WavePro LT Series Busway.

- When the bolt is properly tightened, the outer head will break off with the bright red label removed. This will help eliminate any errors occur during installation by a quick visual inspection.
- No torque wrench is required for initial installation.
- The bolt is reusable after the top head is broken off by using a standard torque wrench on the second bolt head.
- The standard torque is 66 ± 5N.m.

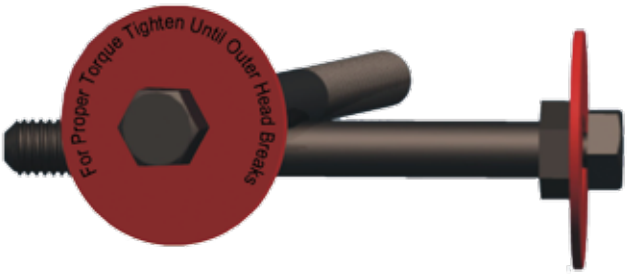

fig.15-2

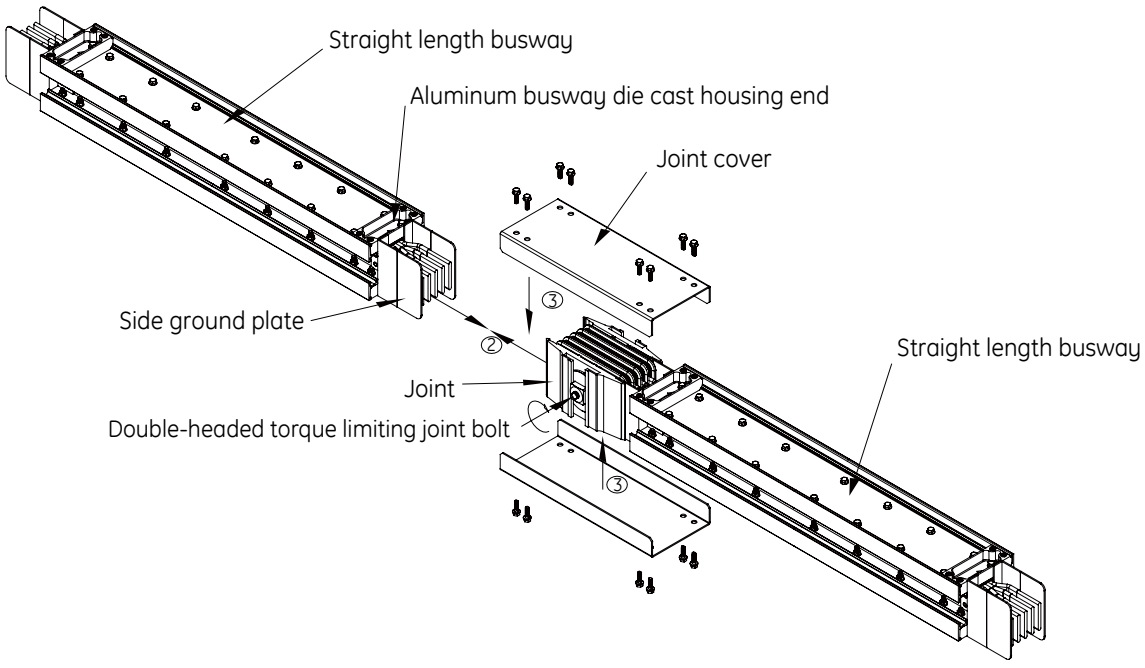

fig.15-3

Physical Data

Fittings

WavePro LT busway system has a complete family of fittings to meet virtually all layout requirements using the compact minimum sizes shown. Special turns such as flat angles greater than 90° and crosses are also available.
Each piece of busway is labeled to maintain proper phasing. All housing width and depth dimensions are identical to straight lengths.

Note: Offsets and combination elbows are typically used only when standard elbows will not fit.



fig.16-1

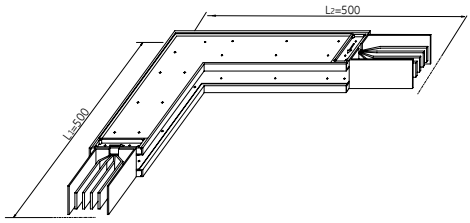

Edgewise elbow

fig.16-2

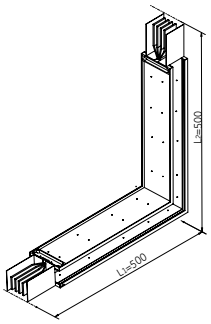

Flatwise elbow

fig.16-3

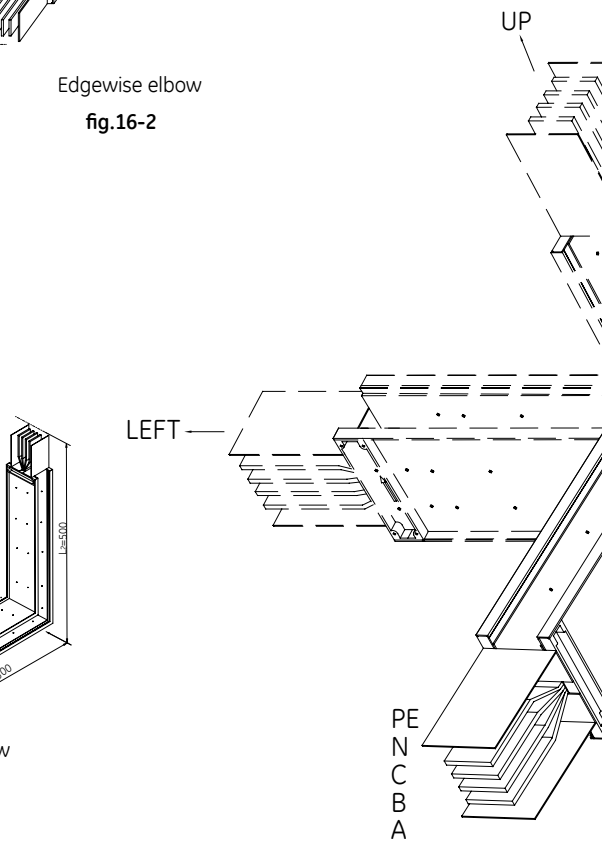

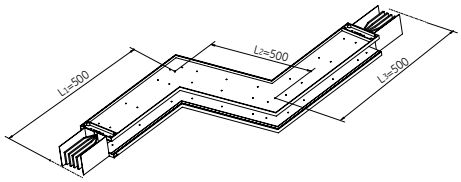

Edgewise offset

fig.16-4

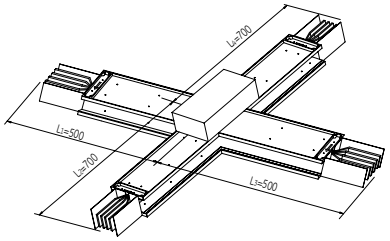

Edgewise cross

fig.17-6

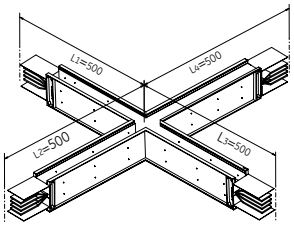

Flatwise cross

fig.17-5

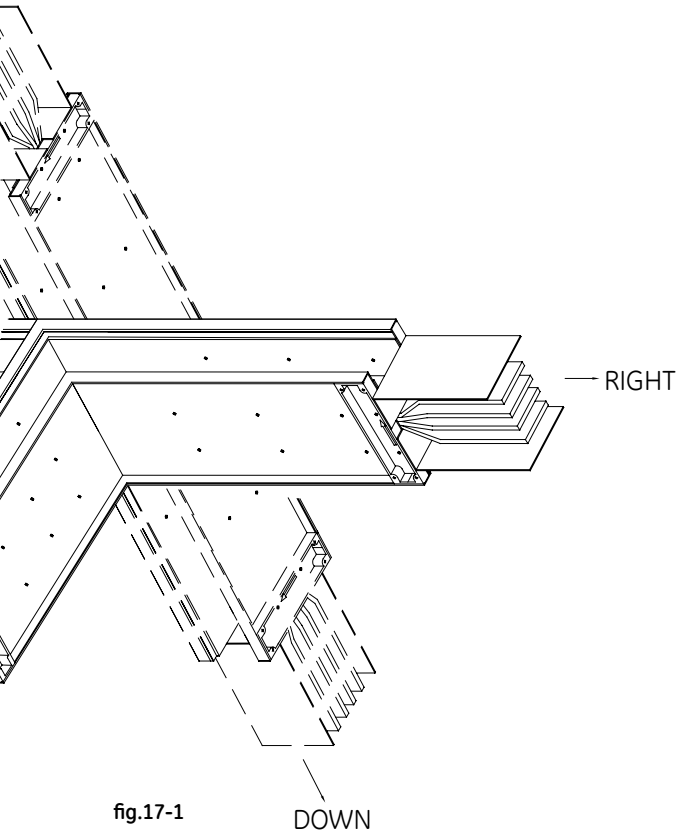

fig.17-1

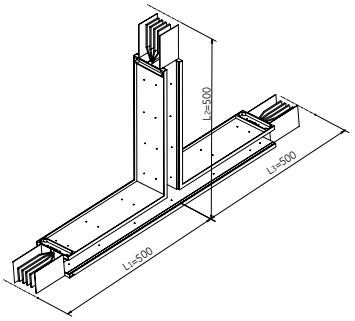

Flatwise tee

fig.17-4

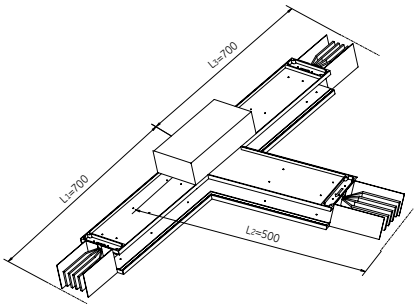

Edgewise tee

fig.17-3

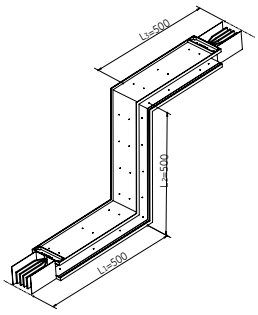

Flatwise offset

fig.17-2

Physical Data

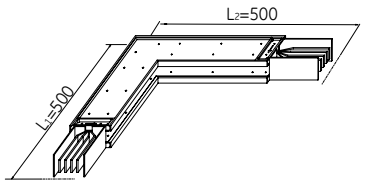

Edgewise elbow
fig.18-1

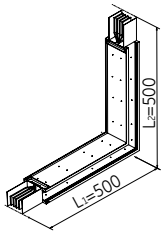

Flatwise elbow
fig.18-2

Fittings data

Edgewise elbow

Rated current (A)	Copper busway size (mm)					Aluminium busway size (mm)				
	Busway height H	Minimum		Standard		Busway height H	Minimum		Standard	
		L1	L2	L1	L2		L1	L2	L1	L2
100	-	-	-	-	-	88	245	245	500	500
160	-	-	-	-	-	88	245	245	500	500
200	-	-	-	-	-	88	245	245	500	500
250	88	245	245	500	500	88	245	245	500	500
400	88	245	245	500	500	98	245	245	500	500
500	-	-	-	-	-	108	245	245	500	500
630	93	245	245	500	500	118	245	245	500	500
800	103	245	245	500	500	138	245	245	500	500
1000	128	245	245	500	500	153	245	245	500	500
1250	143	245	245	500	500	183	245	245	500	500
1350	-	-	-	-	-	198	245	245	500	500
1600	168	245	245	500	500	228	245	245	500	500
2000	218	245	245	500	500	258	245	245	500	500
2500	263	245	245	500	500	323	245	245	500	500
3150	340	245	245	500	500	460	245	245	500	500
3200	-	-	-	-	-	460	245	245	500	500
3800	390	245	245	500	500	550	245	245	500	500
4000	410	245	245	500	500	590	245	245	500	500
4500	500	245	245	500	500	-	-	-	-	-
5000	540	245	245	500	500	-	-	-	-	-

table.18-1

Flatwise elbow

Rated current (A)	Copper busway size (mm)					Aluminium busway size (mm)				
	Busway height H	Minimum		Standard		Busway height H	Minimum		Standard	
		L1	L2	L1	L2		L1	L2	L1	L2
100	-	-	-	-	-	88	224	224	500	500
160	-	-	-	-	-	88	224	224	500	500
200	-	-	-	-	-	88	224	224	500	500
250	88	224	224	500	500	88	224	224	500	500
400	88	224	224	500	500	98	229	229	500	500
500	-	-	-	-	-	108	234	234	500	500
630	93	227	227	500	500	118	239	239	500	500
800	103	232	232	500	500	138	249	249	500	500
1000	128	244	244	500	500	153	257	257	500	500
1250	143	252	252	500	500	183	272	272	500	500
1350	-	-	-	-	-	198	279	279	500	500
1600	168	264	264	500	500	228	294	294	500	500
2000	218	289	289	500	500	258	309	309	500	500
2500	263	312	312	500	500	323	342	342	500	500
3150	340	350	350	500	500	460	410	410	500	500
3200	-	-	-	-	-	460	410	410	500	500
3800	390	375	375	500	500	550	455	455	500	500
4000	410	385	385	500	500	590	475	475	500	500
4500	500	430	430	500	500	-	-	-	-	-
5000	540	450	450	500	500	-	-	-	-	-

table.18-2

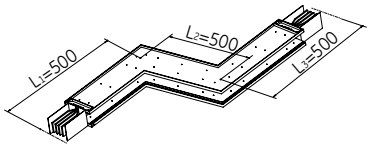

Edgewise offset
fig.19-1

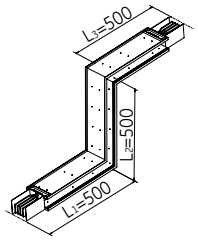

Flatwise offset
fig.19-2

Edgewise offset

Rated current (A)	Copper busway size (mm)							Aluminium busway size (mm)						
	Busway height H	Minimum			Standard			Busway height H	Minimum			Standard		
		L1	L2	L3	L1	L2	L3		L1	L2	L3	L1	L2	L3
100	-	-	-	-	-	-	-	88	245	50	245	500	500	500
160	-	-	-	-	-	-	-	88	245	50	245	500	500	500
200	-	-	-	-	-	-	-	88	245	50	245	500	500	500
250	88	245	50	245	500	500	500	88	245	50	245	500	500	500
400	88	245	50	245	500	500	500	98	245	50	245	500	500	500
500	-	-	-	-	-	-	-	108	245	50	245	500	500	500
630	93	245	50	245	500	500	500	118	245	50	245	500	500	500
800	103	245	50	245	500	500	500	138	245	50	245	500	500	500
1000	128	245	50	245	500	500	500	153	245	50	245	500	500	500
1250	143	245	50	245	500	500	500	183	245	50	245	500	500	500
1350	-	-	-	-	-	-	-	198	245	50	245	500	500	500
1600	168	245	50	245	500	500	500	228	245	50	245	500	500	500
2000	218	245	50	245	500	500	500	258	245	50	245	500	500	500
2500	263	245	50	245	500	500	500	323	245	50	245	500	500	500
3150	340	245	50	245	500	500	500	460	245	50	245	500	500	500
3200	-	-	-	-	-	-	-	460	245	50	245	500	500	500
3800	390	245	50	245	500	500	500	550	245	50	245	500	500	500
4000	410	245	50	245	500	500	500	590	245	50	245	500	500	500
4500	500	245	50	245	500	500	500	-	-	-	-	-	-	-
5000	540	245	50	245	500	500	500	-	-	-	-	-	-	-

table.19-1

Flatwise offset

Rated current (A)	Copper busway size (mm)							Aluminium busway size (mm)						
	Busway height H	Minimum			Standard			Busway height H	Minimum			Standard		
		L1	L2	L3	L1	L2	L3		L1	L2	L3	L1	L2	L3
100	-	-	-	-	-	-	-	88	224	50	224	500	500	500
160	-	-	-	-	-	-	-	88	224	50	224	500	500	500
200	-	-	-	-	-	-	-	88	224	50	224	500	500	500
250	88	224	50	224	500	500	500	88	224	50	224	500	500	500
400	88	224	50	224	500	500	500	98	229	50	229	500	500	500
500	-	-	-	-	-	-	-	108	234	50	234	500	500	500
630	93	227	50	227	500	500	500	118	239	50	239	500	500	500
800	103	232	50	232	500	500	500	138	249	50	249	500	500	500
1000	128	244	50	244	500	500	500	153	257	50	257	500	500	500
1250	143	252	51	252	500	500	500	183	272	50	272	500	500	500
1350	-	-	-	-	-	-	-	198	279	50	279	500	500	500
1600	168	264	50	264	500	500	500	228	294	50	294	500	500	500
2000	218	289	50	289	500	500	500	258	309	50	309	500	500	500
2500	263	312	50	312	500	500	500	323	342	50	342	500	500	500
3150	340	350	50	350	500	500	500	460	410	50	410	500	500	500
3200	-	-	-	-	-	-	-	460	410	50	410	500	500	500
3800	390	375	50	375	500	500	500	550	455	50	455	500	500	500
4000	410	385	50	385	500	500	500	590	475	50	475	500	500	500
4500	500	430	50	430	500	500	500	-	-	-	-	-	-	-
5000	540	450	50	450	500	500	500	-	-	-	-	-	-	-

table.19-2

Physical Data

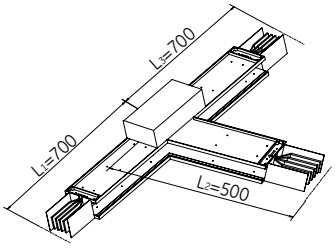

Edgewise tee
fig.20-1

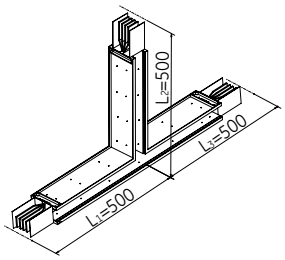

Flatwise tee
fig.20-2

Fittings data

Edgewise tee

Rated current (A)	Copper busway size (mm)							Aluminium busway size (mm)						
	Busway height H	Minimum			Standard			Busway height H	Minimum			Standard		
		L1	L2	L3	L1	L2	L3		L1	L2	L3	L1	L2	L3
100	-	-	-	-	-	-	-	88	340	300	340	500	500	500
160	-	-	-	-	-	-	-	88	340	300	340	500	500	500
200	-	-	-	-	-	-	-	88	340	300	340	500	500	500
250	88	340	300	340	500	500	500	88	340	300	340	500	500	500
400	88	340	300	340	500	500	500	98	350	300	350	500	500	500
500	-	-	-	-	-	-	-	108	360	300	360	500	500	500
630	93	345	300	345	500	500	500	118	370	300	370	500	500	500
800	103	355	300	355	500	500	500	138	390	300	390	500	500	500
1000	128	380	300	380	500	500	500	153	405	300	405	500	500	500
1250	143	395	300	395	500	500	500	183	435	300	435	500	500	500
1350	-	-	-	-	-	-	-	198	450	300	450	500	500	500
1600	168	420	300	420	500	500	500	228	480	300	480	500	500	500
2000	218	470	300	470	700	500	700	258	510	300	510	700	500	700
2500	263	515	300	515	700	500	700	323	575	300	575	700	500	700
3150	340	435	300	435	700	500	700	460	495	300	495	700	500	700
3200	-	-	-	-	-	-	-	460	495	300	495	700	500	700
3800	390	460	300	460	700	500	700	550	540	300	540	700	500	700
4000	410	470	300	470	700	500	700	590	560	300	560	700	500	700
4500	500	515	300	515	700	500	700	-	-	-	-	-	-	-
5000	540	535	300	535	700	500	700	-	-	-	-	-	-	-

table.20-1

Flatwise tee

Rated current (A)	Copper busway size (mm)							Aluminium busway size (mm)						
	Busway height H	Minimum			Standard			Busway height H	Minimum			Standard		
		L1	L2	L3	L1	L2	L3		L1	L2	L3	L1	L2	L3
100	-	-	-	-	-	-	-	88	224	224	224	500	500	500
160	-	-	-	-	-	-	-	88	224	224	224	500	500	500
200	-	-	-	-	-	-	-	88	224	224	224	500	500	500
250	88	224	224	224	500	500	500	88	224	224	224	500	500	500
400	88	224	224	224	500	500	500	98	229	229	229	500	500	500
500	-	-	-	-	-	-	-	108	234	234	234	500	500	500
630	93	227	227	227	500	500	500	118	239	239	239	500	500	500
800	103	232	232	232	500	500	500	138	249	249	249	500	500	500
1000	128	244	244	244	500	500	500	153	257	257	257	500	500	500
1250	143	252	252	252	500	500	500	183	272	272	272	500	500	500
1350	-	-	-	-	-	-	-	198	279	279	279	500	500	500
1600	168	264	264	264	500	500	500	228	294	294	294	500	500	500
2000	218	289	289	289	500	500	500	258	309	309	309	500	500	500
2500	263	312	312	312	500	500	500	323	342	342	342	500	500	500
3150	340	350	350	350	500	500	500	460	410	410	410	500	500	500
3200	-	-	-	-	-	-	-	460	410	410	410	500	500	500
3800	390	375	375	375	500	500	500	550	455	455	455	500	500	500
4000	410	385	385	385	500	500	500	590	475	475	475	500	500	500
4500	500	430	430	430	500	500	500	-	-	-	-	-	-	-
5000	540	450	450	450	500	500	500	-	-	-	-	-	-	-

table.20-2

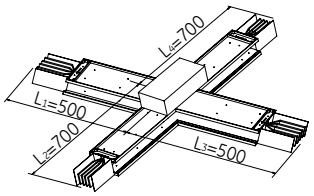

Edgewise cross
fig.21-1

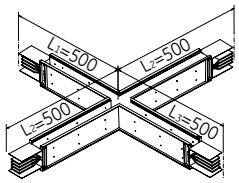

Flatwise cross
fig.21-2

Edgewise cross

Rated current (A)	Copper busway size (mm)									Aluminium busway size (mm)								
	Busway height H	Minimum				Standard				Busway height H	Minimum				Standard			
		L1	L2	L3	L4	L1	L2	L3	L4		L1	L2	L3	L4	L1	L2	L3	L4
100	-	-	-	-	-	-	-	-	-	88	300	372	300	372	500	500	500	500
160	-	-	-	-	-	-	-	-	-	88	300	372	300	372	500	500	500	500
200	-	-	-	-	-	-	-	-	-	88	300	372	300	372	500	500	500	500
250	88	300	372	300	372	500	500	500	500	88	300	372	300	372	500	500	500	500
400	88	300	372	300	372	500	500	500	500	98	300	382	300	382	500	500	500	500
500	-	-	-	-	-	-	-	-	-	108	300	392	300	392	500	500	500	500
630	93	300	377	300	377	500	500	500	500	118	300	402	300	402	500	500	500	500
800	103	300	387	300	387	500	500	500	500	138	300	422	300	422	500	500	500	500
1000	128	300	412	300	412	500	500	500	500	153	300	437	300	437	500	500	500	500
1250	143	300	427	300	427	500	500	500	500	183	300	467	300	467	500	500	500	500
1350	-	-	-	-	-	-	-	-	-	198	300	482	300	482	500	500	500	500
1600	168	300	452	300	452	500	700	500	700	228	300	512	300	512	500	700	500	700
2000	218	300	502	300	502	500	700	500	700	258	300	542	300	542	500	700	500	700
2500	263	300	547	300	547	500	700	500	700	323	300	607	300	607	500	700	500	700
3150	340	300	467	300	467	500	700	500	700	460	300	527	300	527	500	700	500	700
3200	-	-	-	-	-	-	-	-	-	460	300	527	300	527	500	700	500	700
3800	390	300	492	300	492	500	700	500	700	550	300	572	300	572	500	700	500	700
4000	410	300	502	300	502	500	700	500	700	590	300	592	300	592	500	700	500	700
4500	500	300	547	300	547	500	700	500	700	-	-	-	-	-	-	-	-	-
5000	540	300	567	300	567	500	700	500	700	-	-	-	-	-	-	-	-	-

table.21-1

Flatwise cross

Rated current (A)		Copper busway size (mm)									Aluminium busway size (mm)							
	Busway height H	Minimum				Standard				Busway height H	Minimum				Standard			
		L1	L2	L3	L4	L1	L2	L3	L4		L1	L2	L3	L4	L1	L2	L3	L4
100	-	-	-	-	-	-	-	-	-	88	224	224	224	224	500	500	500	500
160	-	-	-	-	-	-	-	-	-	88	224	224	224	224	500	500	500	500
200	-	-	-	-	-	-	-	-	-	88	224	224	224	224	500	500	500	500
250	88	224	224	224	224	500	500	500	500	88	224	224	224	224	500	500	500	500
400	88	224	224	224	224	500	500	500	500	98	229	229	229	229	500	500	500	500
500	-	-	-	-	-	-	-	-	-	108	234	234	234	234	500	500	500	500
630	93	227	227	227	227	500	500	500	500	118	239	239	239	239	500	500	500	500
800	103	232	232	232	232	500	500	500	500	138	249	249	249	249	500	500	500	500
1000	128	244	244	244	244	500	500	500	500	153	257	257	257	257	500	500	500	500
1250	143	252	252	252	252	500	500	500	500	183	272	272	272	272	500	500	500	500
1350	-	-	-	-	-	-	-	-	-	198	279	279	279	279	500	500	500	500
1600	168	264	264	264	264	500	500	500	500	228	294	294	294	294	500	500	500	500
2000	218	289	289	289	289	500	500	500	500	258	309	309	309	309	500	500	500	500
2500	263	312	312	312	312	500	500	500	500	323	342	342	342	342	500	500	500	500
3150	340	350	350	350	350	500	500	500	500	460	410	410	410	410	500	500	500	500
3200	-	-	-	-	-	-	-	-	-	460	410	410	410	410	500	500	500	500
3800	390	375	375	375	375	500	500	500	500	550	455	455	455	455	500	500	500	500
4000	410	385	385	385	385	500	500	500	500	590	475	475	475	475	500	500	500	500
4500	500	430	430	430	430	500	500	500	500	-	-	-	-	-	-	-	-	-
5000	540	450	450	450	450	500	500	500	500	-	-	-	-	-	-	-	-	-

table.21-2

Physical Data

Flanged end

Flanged end and end tap box can be used in connection with switchgear and transformer of any type, and users can determine the spacing between the stubs of the bus bar based on the specific applications.

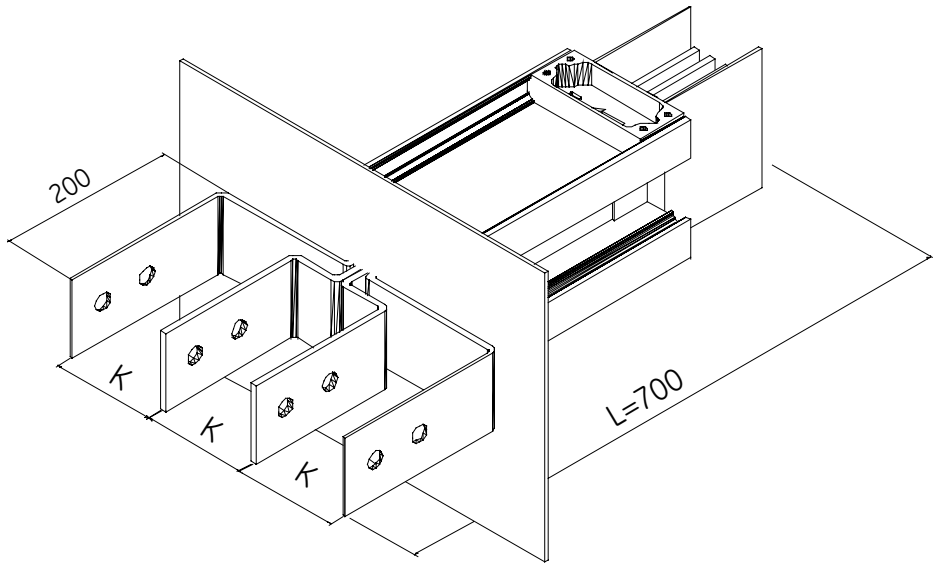

fig.22-1

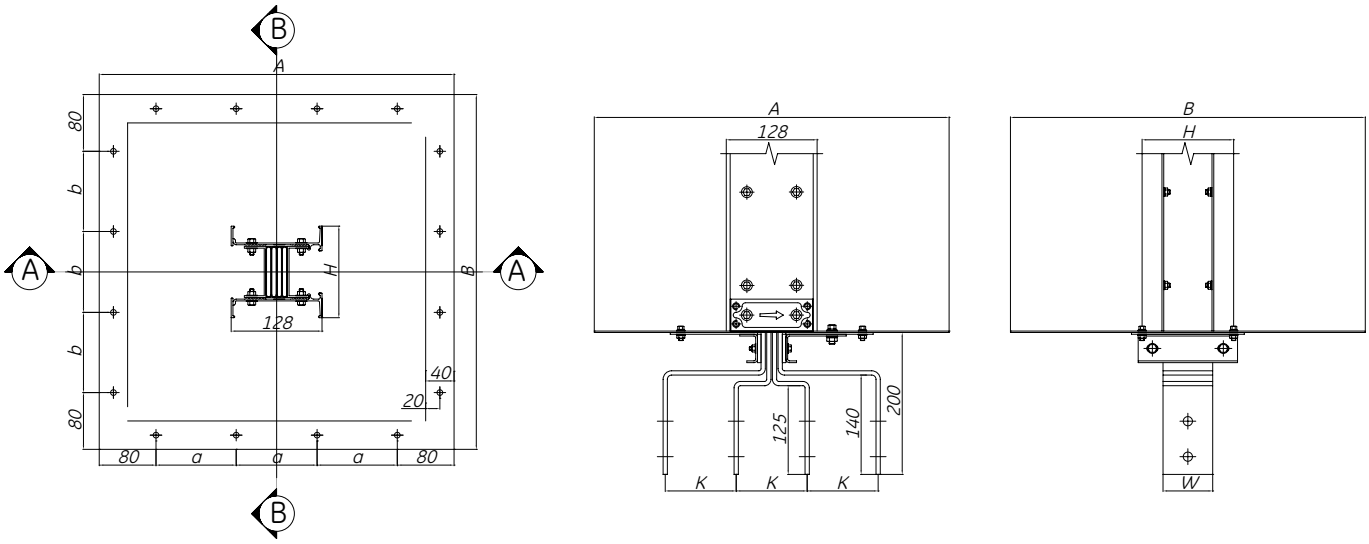

FLANGED END STUB PLAN VIEW　　SECTION `A' - 'A'　　SECTION `B' - 'B'

fig.22-2

Note:

1. AS a standard flanged end, when the bus bar current is less than or equal to 1600A, K=100mm; when the bus bar current is more than 1600A, K=120mm.

2.All the dimensions provided are for standard products. Please contact our engineers for customized products' dimensions.

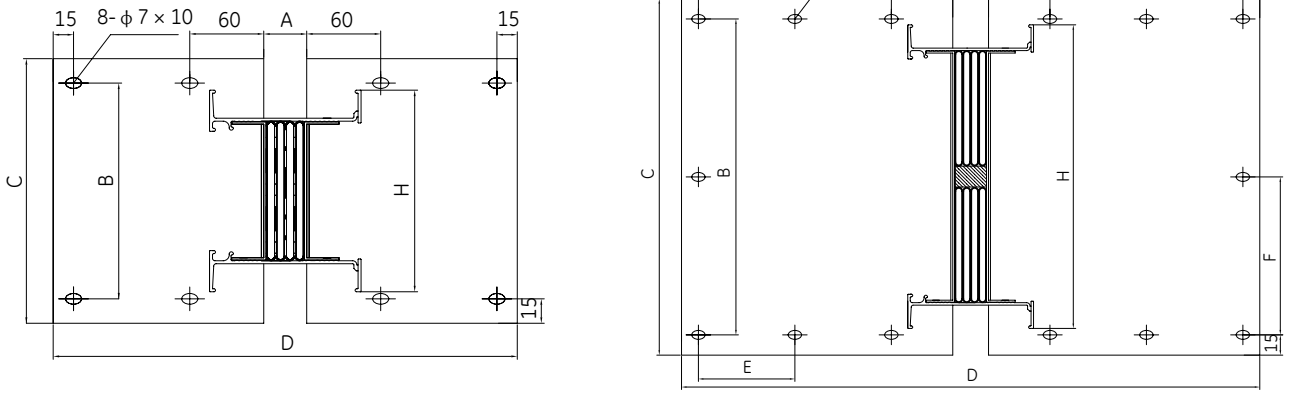

fig.23-1

Copper bar

Size: mm

Rated current (A)	H	A		B	C	D	
		4 Wire	5 Wire			4 Wire	5 Wire
250	88	35	39	90	120	390	490
400	88	35	39	90	120	390	490
630	93	35	39	95	125	390	490
800	103	35	39	105	135	390	490
1000	128	35	39	130	160	390	490
1250	143	35	39	145	175	390	490
1600	168	35	39	170	200	390	490
2000	218	35	39	220	250	450	570
2500	263	35	39	265	295	450	570
3150	340	35	39	342	372	450	570
3800	390	35	39	392	422	450	570
4000	410	35	39	412	442	450	570
4500	500	35	39	502	532	450	570
5000	540	35	39	542	572	450	570

table.23-1

Note:

1. As shown in the figure, for the location of the hole of outboard, it shall be 15mm away from the outer edge; while for the location of the one of inboard, it shall be 60mm away from the inner edge. The rest distance wherein is given uniformly for mid holes according to situation.

2. E and F indicate the distance between the centers of two adjacent holes, and the value shall be limited with the extension from 100mm to 250mm, E and F will be confirmed and sent to the customer when the end tap box dimension is confirmed.

Aluminium bar

Size: mm

Rated current (A)	H	A		B	C	D	
		4 Wire	5 Wire			4 Wire	5 Wire
100	88	35	39	90	120	390	490
160	88	35	39	90	120	390	490
200	88	35	39	90	120	390	490
250	88	35	39	90	120	390	490
400	98	35	39	100	130	390	490
500	108	35	39	110	140	390	490
630	118	35	39	120	150	390	490
800	138	35	39	140	170	390	490
1000	153	35	39	155	185	390	490
1250	183	35	39	185	215	390	490
1350	198	35	39	200	230	390	490
1600	228	35	39	230	260	390	490
2000	258	35	39	260	290	450	570
2500	323	35	39	325	355	450	570
3150	460	35	39	462	492	450	570
3200	460	35	39	462	492	450	570
3800	550	35	39	552	582	450	570
4000	590	35	39	592	622	450	570

table.23-2

Physical Data

Flanged end details

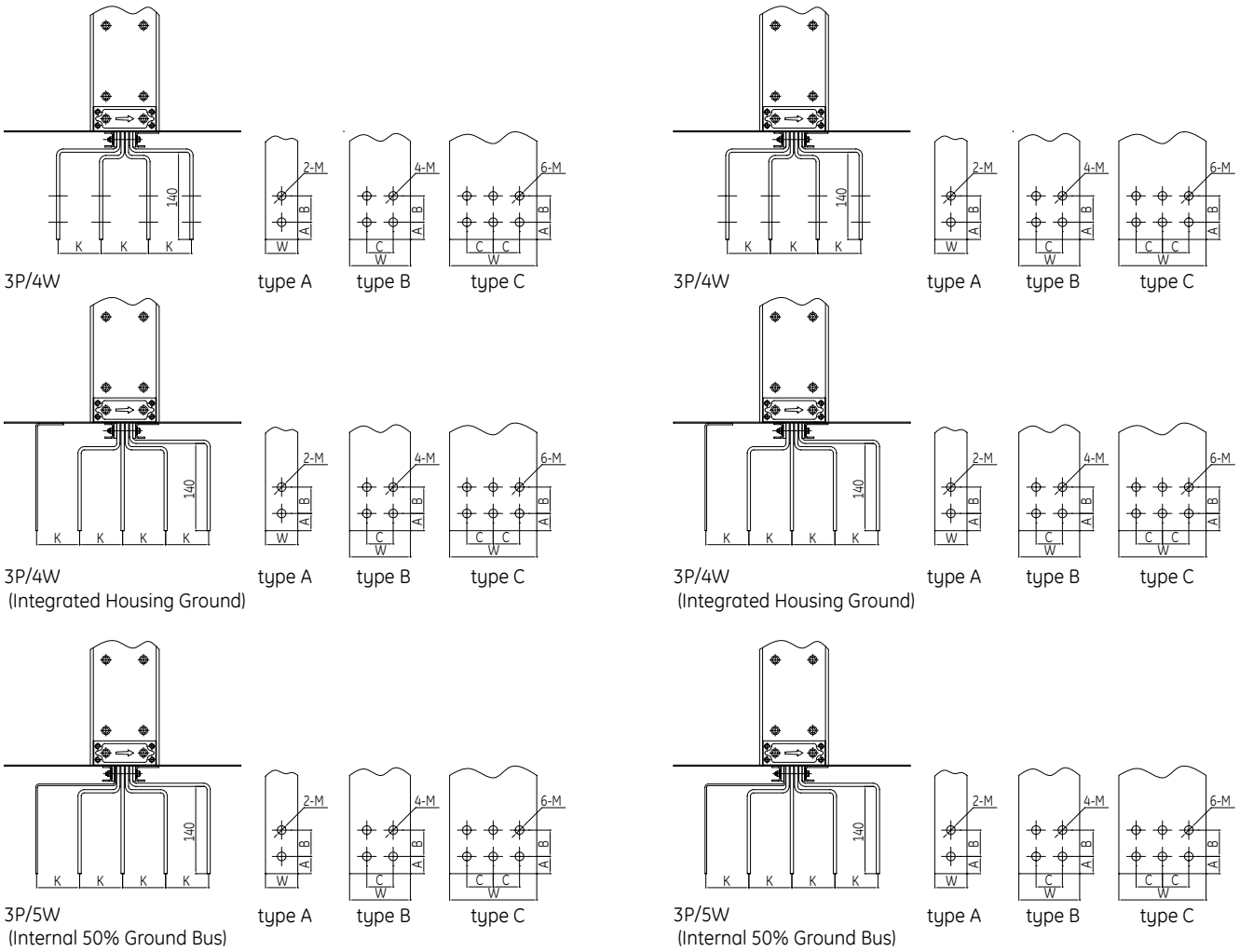

fig.24-1

fig.24-2

Copper busbar

Size: mm

Rated current (A)	A	B	C	K	2-M	Type
100	-	-	-	-	-	-
160	-	-	-	-	-	-
200	-	-	-	-	-	-
250	20	40	-	100	2- ϕ 11	A
400	20	40	-	100	2- ϕ 11	A
630	20	40	-	100	2- ϕ 11	A
800	20	40	-	100	2- ϕ 11	A
1000	25	50	-	100	2- ϕ 14	A
1250	20	40	40	100	4- ϕ 14	B
1600	25	50	50	100	4- ϕ 18	B
2000	30	60	60	120	4- ϕ 18	B
2500	30	60	60	120	6- ϕ 18	C
3150	30	60	60	120	4- ϕ 18	B
3800	25	50	50	120	6- ϕ 18	C
4000	25	50	50	120	6- ϕ 18	C
4500	30	60	60	120	6- ϕ 18	C
5000	30	60	60	120	6- ϕ 18	C

table.24-1

Aluminium busbar

Size: mm

Rated current (A)	A	B	C	K	2-M	Type
100	20	40	-	100	2- ϕ 11	A
160	20	40	-	100	2- ϕ 11	A
200	20	40	-	100	2- ϕ 11	A
250	20	40	-	100	2- ϕ 11	A
400	20	40	-	100	2- ϕ 11	A
500	25	50	-	100	2- ϕ 14	A
630	25	50	-	100	2- ϕ 14	A
800	20	40	40	100	4- ϕ 14	B
1000	20	40	40	100	4- ϕ 14	B
1250	30	60	60	100	4- ϕ 18	B
1350	30	60	60	100	4- ϕ 18	B
1600	25	50	50	100	6- ϕ 18	C
2000	30	60	60	120	6- ϕ 18	C
2500	30	60	60	120	6- ϕ 18	C
3150	25	50	50	120	6- ϕ 18	C
3200	25	50	50	120	6- ϕ 18	C
3800	30	60	60	120	6- ϕ 18	C
4000	30	60	60	120	6- ϕ 18	C
4500	-	-	-	-	-	-
5000	-	-	-	-	-	-

table.24-2

Note: For the current equal to or above 3150A, two bars shall be adopted for per phase, and the hole dimension shown in the tab shall be furnished in both bars.

End tap box

WavePro LT busway system tap boxes are used where a run of busway is fed by cable. We offer standard size end tap box (1m × 1m × 1m) while we also supply with nonstandard box according to the on-site measurement.
All the dimension provided are for standard products. Please contact our engineers for customized products' dimensions.



fig.25-1

Flang end with end tap box connection

The flange plate can be manufactured according to the size of the end tap box, it can be connected directly with end tap box.



fig.25-2

Terminal cover

Terminal cover is installed to terminate the busway, preventing outsider environment from contacting with the live parts, thus enclosing the whole bus system.

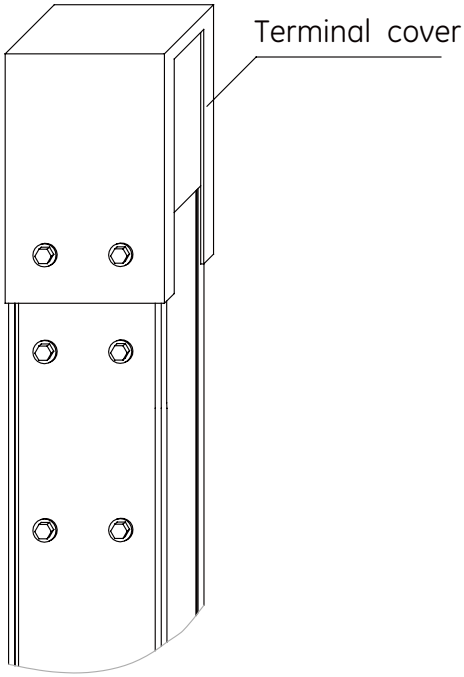

fig.25-3

Physical Data

Flanged end cutout and hole pattern

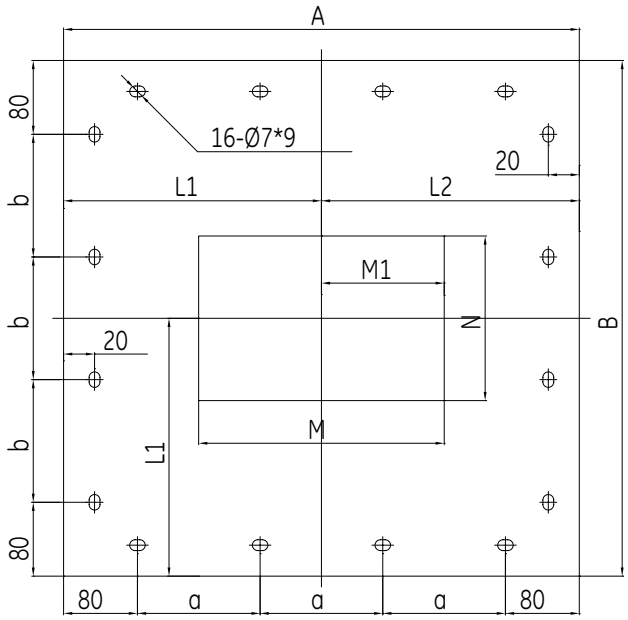

fig.26-1

Copper busbar

Size: mm

Rated current (A)	M		N
	4 Wire	5Wire	
100	-	-	-
160	-	-	-
200	-	-	-
250	330	430	60
400	330	430	60
500	-	-	-
630	330	430	65
800	330	430	75
1000	330	430	100
1250	330	430	115
1600	330	430	140
2000	390	510	190
2500	390	510	235
3150	390	510	312
3800	390	510	362
4000	390	510	382
4500	390	510	472
5000	390	510	512

table.26-1

Aluminium busbar

Size: mm

Rated current (A)	M		N
	4 Wire	5Wire	
100	330	430	60
160	330	430	60
200	330	430	60
250	330	430	60
400	330	430	70
500	330	430	80
630	330	430	90
800	330	430	110
1000	330	430	125
1250	330	430	155
1350	330	430	170
1600	330	430	200
2000	390	510	230
2500	390	510	295
3150	390	510	432
3200	390	510	432
3800	390	510	522
4000	390	510	562
4500	-	-	-
5000	-	-	-

table.26-2

Note:

1、"A" indicates the length of end tap box while "B" indicates the width, they are based on the site situation.

2、"L1" and "L2" are based on the location of flanged end. For standard product, they' are the same.

3、"M1" is based on the location of flanged end. For standard product, M1=M/2.

4、As shown in the figure, the hole in the corner shall be 75mm away from one edge of end tap box and 20mm away from the other, the rest distance wherein is given uniformly for mid holes according to situation.

5、"a" and " b" indicate the distance between the centers of two adjacent holes, and the value shall be limited with the extension from 100mm to 250mm.

Expansion length

Expansion length is the transition section compensating for thermal expansion, it is normally set each 60m in linear distance.

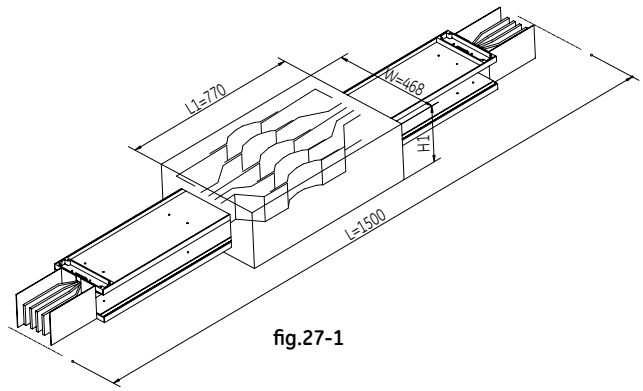

fig.27-1

Note: H1=H+67 (H is bus height)

Reducer

This transition section is used for reducing busbar size to the final load, it provides users with more economic power transmission and distribution method.

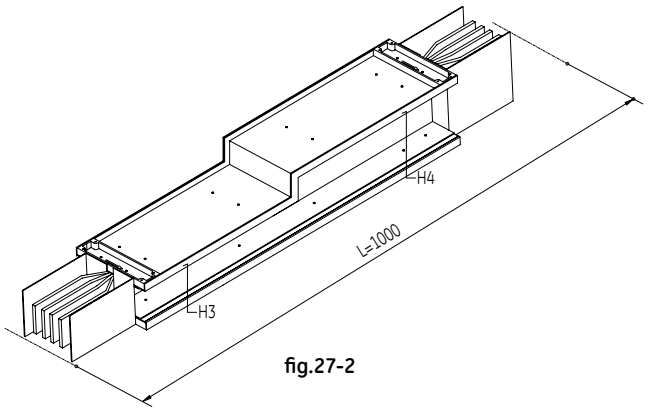

fig.27-2

Note: H3, H4 is the height of the busway.
Please refer to table.12-2.

Transposition section

Transposition section is the transition parts used for changing phase sequence of the busbar; its minimum size is 1500mm. The phase sequence of both sides has to be provided by the customer.

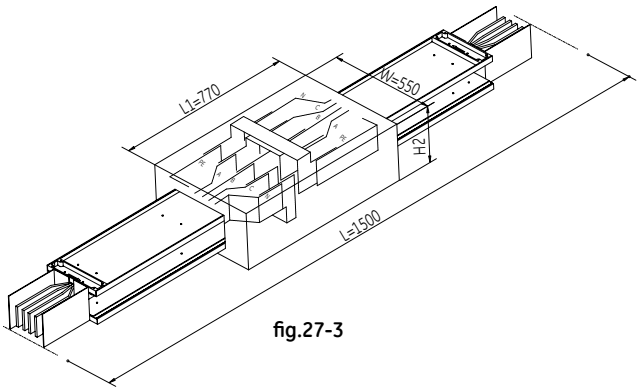

fig.27-3

Note: H2=H+200mm (H is busbar height)

Note:
1.For H dimensions please refer to table.12-2.
2.All the dimensions provided are for standard products. Please contact our engineers for customized products' dimensions.

Physical Data

Resistance to flame propagation

WavePro LT Busway meets requirement of 8.2.14 of IEC60439-2 - Resistance to flame-propagation.
The test is performed according to IEC 60332-3, with a flame application time of 40 Min.

Fire proofing in building penetration

WavePro LT Busway, fitted with a fire barrier unit, meets requirement of 8.2.15 of IEC60439-2 – Fire resistance in building penetrations. Fire resistance 120 min.

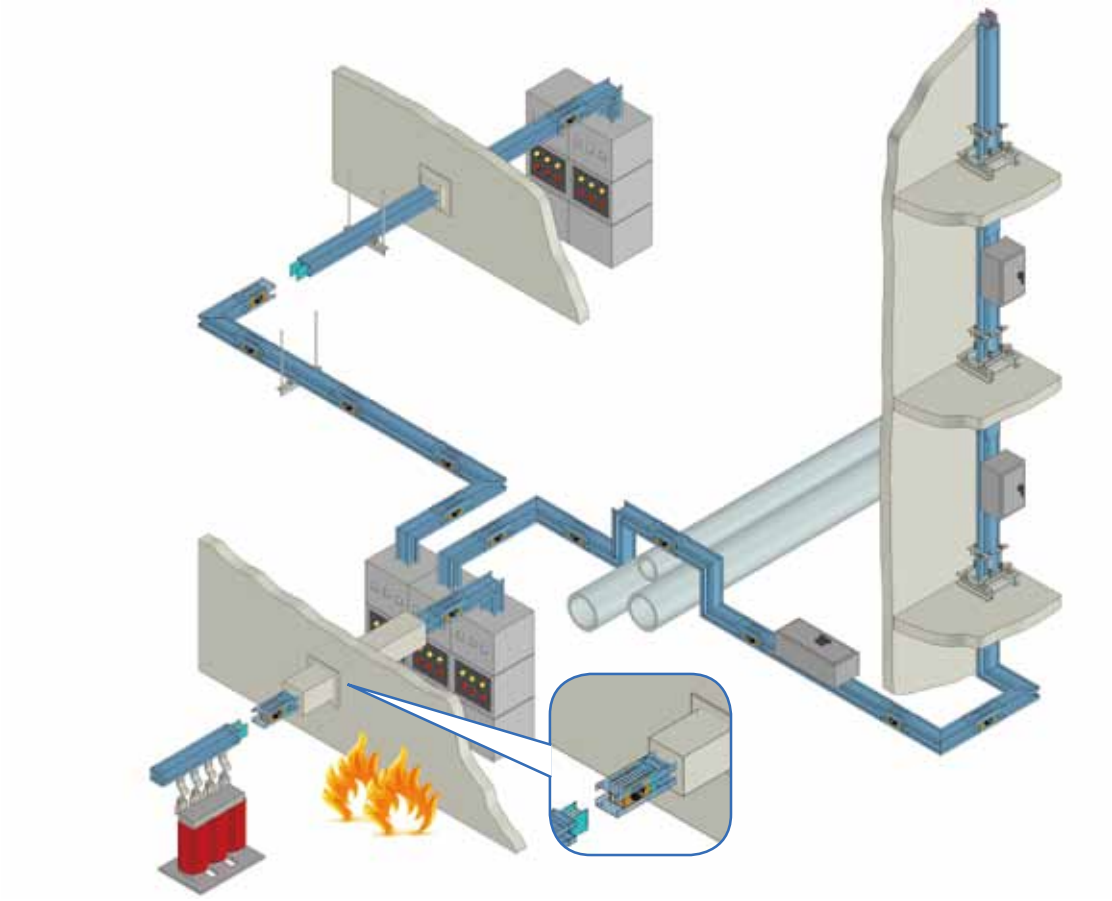

Wall flange

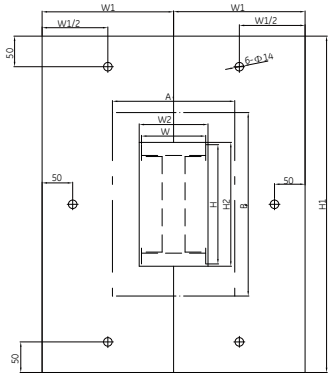

fig.29-1

1. W indicates the width of busway while H indicates the height;
2. A indicates the width of cutout while B indicates the height;
3. W1 indicates the external width of flange while H1 indicates the height;
4. W2 indicates the internal width of flange while H2 indicates the height;
5. The flange is dimidiate;
6. Flange is necessary in both sides of the cutout;
7. Flange is fixed against the wall with internal expansion bolt.

Copper bar

Size: mm

Rated current (A)	External dimension of busway W×H	Dimension of cutout A×B (≥)	External dimension of wall flange W1×H1 (≥)	Internal dimension of wall flange W2×H2 (≥)
250	128×88	230×190	215×390	140×100
400	128×88	230×190	215×390	140×100
630	128×93	230×195	215×395	140×105
800	128×103	230×205	215×405	140×115
1000	128×128	230×230	215×430	140×140
1250	128×143	230×245	215×445	140×155
1600	128×168	230×270	215×470	140×180
2000	128×218	230×320	215×520	140×230
2500	128×263	230×365	215×565	140×275
3150	128×340	230×442	215×642	140×352
3800	128×390	230×492	215×692	140×402
4000	128×410	230×512	215×712	140×422
4500	128×500	230×602	215×802	140×512
5000	128×540	230×642	215×842	140×552

table.29-1

Aluminium bar

Size: mm

Rated current (A)	External dimension of busway W×H	Dimension of cutout A×B (≥)	External dimension of wall flange W1×H1 (≥)	Internal dimension of wall flange W2×H2 (≥)
100	128×88	230×190	215×390	140×100
160	128×88	230×190	215×390	140×100
200	128×88	230×190	215×390	140×100
250	128×88	230×190	215×390	140×100
400	128×98	230×200	215×400	140×110
500	128×108	230×210	215×410	140×120
630	128×118	230×220	215×420	140×130
800	128×138	230×240	215×440	140×150
1000	128×153	230×255	215×455	140×165
1250	128×183	230×285	215×485	140×195
1350	128×198	230×300	215×500	140×210
1600	128×228	230×330	215×530	140×240
2000	128×258	230×360	215×560	140×270
2500	128×323	230×425	215×625	140×335
3150	128×460	230×562	215×762	140×472
3200	128×460	230×562	215×762	140×472
3800	128×550	230×652	215×852	140×562
4000	128×590	230×692	215×892	140×602

table.29-2

Physical Data

Bus plug

WavePro LT bus plugs are used to apply electrical power directly to the load from the busway system. The protection component in a bus plug can be either a circuit breaker or fuse.

Circuit breaker bus plugs:

Circuit breaker protection is available for a current between 16A~1000A.
GE circuit breakers are provided as standard offering.
3-Pole or 4-Pole circuit breakers may be installed in the plug for load protection, including accessories of circuit breakers such as rotary handles, shunt release, thermal magnetic release and leakage-current protection module..

Fused bus plugs:

Fused bus plugs are made specifically per customer's project specifications.
Please contact with our local sales office for ordering information.

Unique fail-safe base pins: the plug is equipped with a positioning device that prevents incorrect installations.
Base lugs: all the lugs are silver-plated to improve their electrical conductivity.

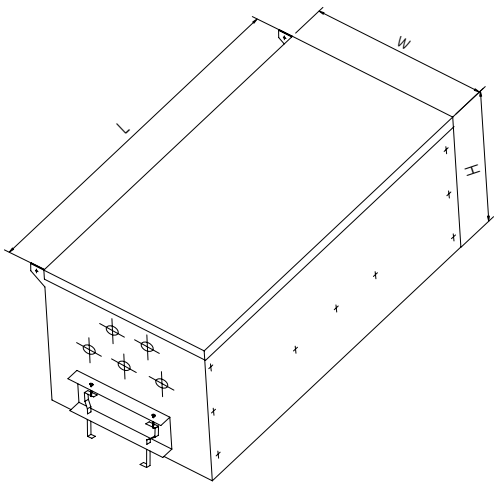

fig.30-1

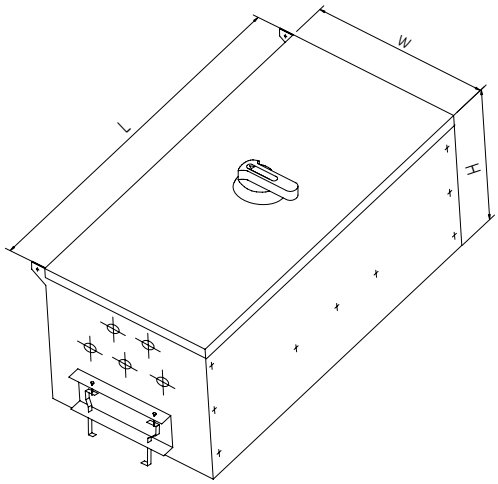

fig.30-2

Physical data of plug (L × W × H) mm

For any nonstandard dimension, please contact with us.

Operation mode	Rated current (A)	Dimension of plug (L × W × H) mm
Manual operating mechanism fig.30-1	25~160	450 × 240 × 260
	200, 250	550 × 260 × 280
	400	650 × 300 × 300
	800~1000*	1200 × 550 × 400
Rotary operating mechanism** fig.30-2	25~160	430 × 240 × (275+70)**
	225	460 × 260 × (275+70)**
	200, 250	550 × 260 × (320+70)**
	400	650 × 300 × (340+70)**
	800~1000*	1200 × 550 × (400+70)**

table.30-1

*** Contact local sales.**
**** The added 70mm is for the rotary handle installation space.**

Accessories

Edgewise hanger & Edgewise installation beam

The edgewise hanger is used when the busway is edgewise installed. It can fit all ampere ratings.

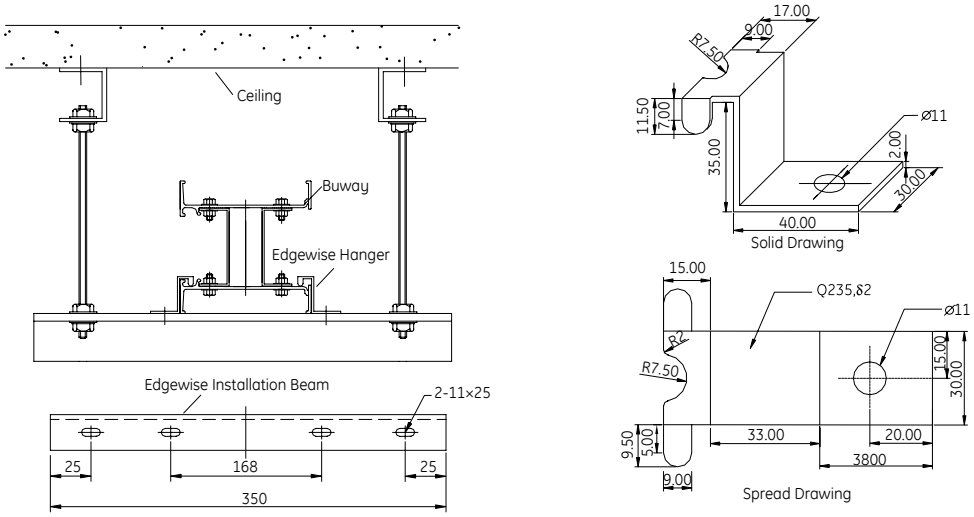

fig.31-1

Flatwise hanger & Flatwise installation beam

The flatwise hanger is used when the busway is flatwise installed. It can fit all ampere ratings. But the dimension of the flatwise installation beam is related with the ampere ratings. In the pic below W is the width of the busway.

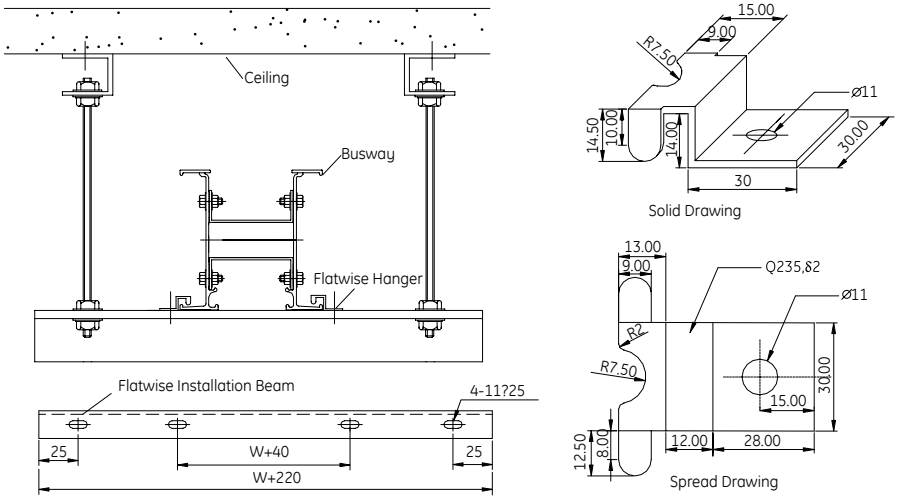

fig.31-2

Note:
1.All the dimension's unit is mm.
2.All the dimensions provided are for standard products. Please contact our engineers for customized products' dimensions.
3.The edgewise and flatwise hanger are provided by the factory.
4.The installtion beam and steeve are provided by the installtion company as a rule. It is charged separately when provided by the factory,and the dimension should be provided.

Accessories

Fixed hanger

The fixation hanger is used when the busway is vertically installed. It is installed on the wall between the two floors. It keeps the busway from moving horizontally. It can fit all ampere ratings. Fixation hanger has two parts, a pair of "Fixation Hanger Holder" which are perpendicular to the wall and a "Fixation Hanger Beam" which is parallel with the wall.

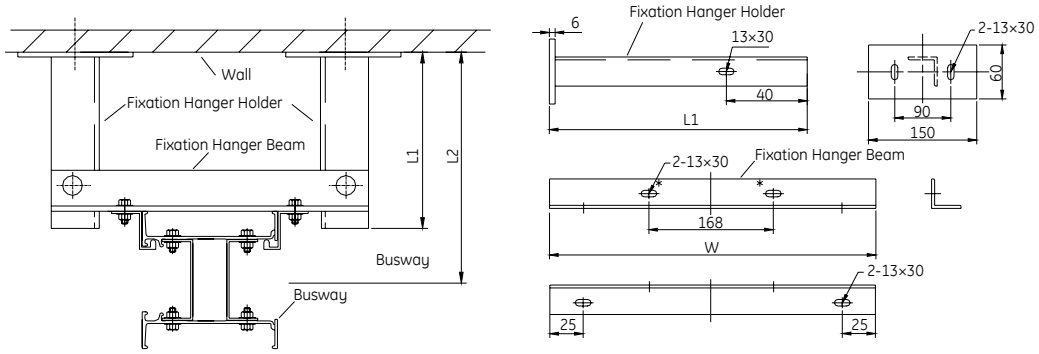

fig.32-1

Note:
1. L1 and L2 are customized based on different projects. Other dimensions are for standard products.
2. The fixation hanger are provided by the installtion company as a rule. It is charged separately when provided by the factory, and the dimension should be provided.

Spring hanger

Spring hanger is used in each floor to support the vertically installed busway's weight.
The spring hanger is connected with the busway by bolt.
Spring hangers have different spring quantities for different ampere rating busways. Please refer to table. 36-1.

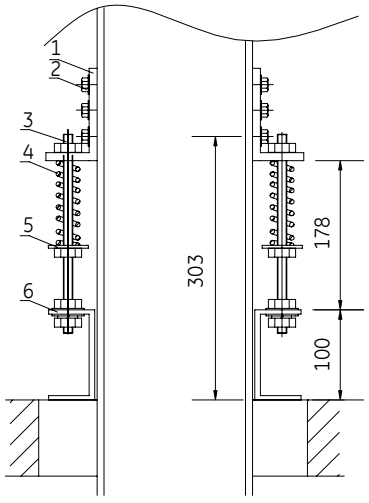

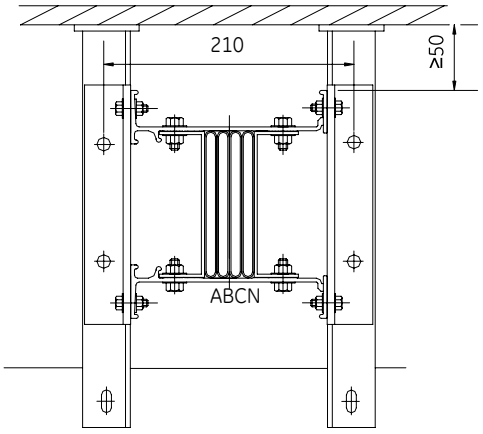

Accessories:
1. Spring supporter
2. Hex head bolt
3. Double-headed bolt
4. Spring
5. Cushion
6. Channel steel base

fig.32-2

Rated current	Spring Qty
250-800	2
1000-2500	4
3150-5000	6

table. 32-1

Note:
1. All the dimensions' unit is mm.
2. All the dimension provided are for standard products. Please contact our engineers for customized products' dimensions.

Application

Connection to Low Voltage Switchgear

WavePro LT busway system provides flanged end/stub units for termination to the switchboard busbars.

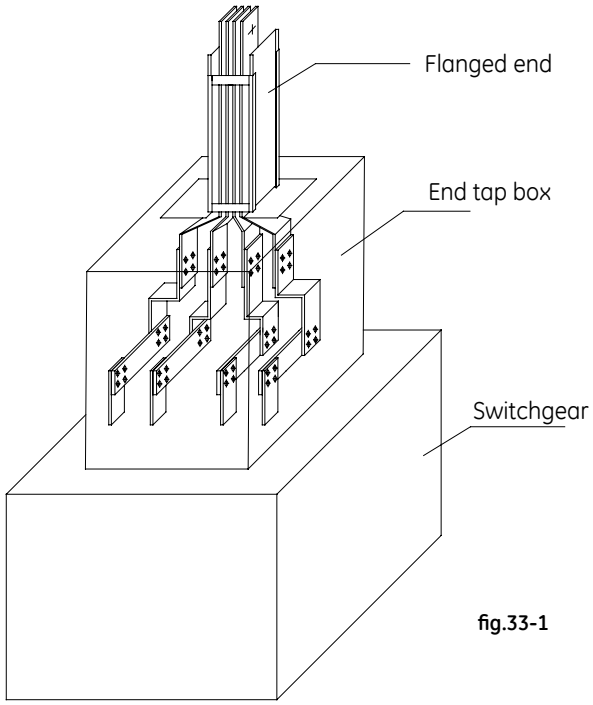

fig.33-1

Connection to Transformer

WavePro LT busway system provides flanged end/stub units for flexible or hard connection. It may be designed according to the LV terminal of the transformers.

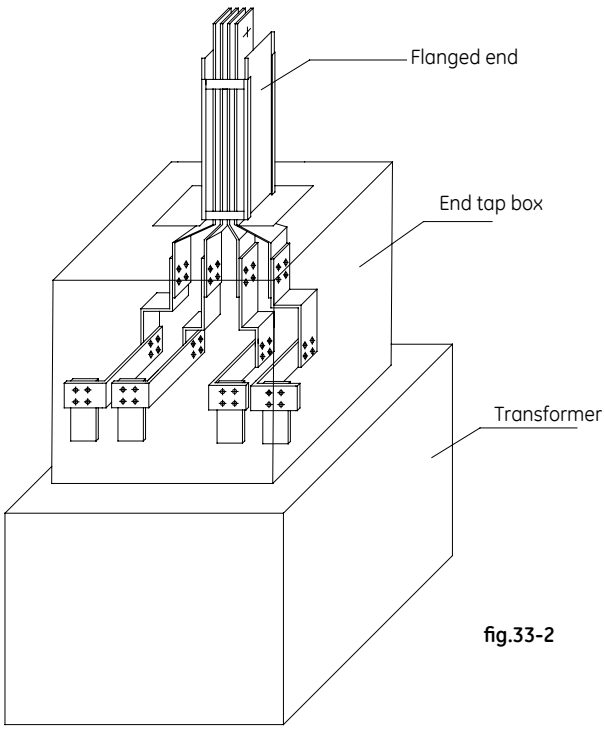

fig.33-2

Note: Please make clear the connection parts type and provider. We charged it separately when provided by the factory.

Installation

Protection Class

GE WavePro LT busway systems are offered with options for indoor, drip proof and splash proof applications.

IP40 - Protection against dusts.
IP42 - Protection against dusts and water drops.
IP54 - Protection against dusts and water sprays.
IP65 - Protection against dusts and water jets.

Minimum clearance required for heat dissipation

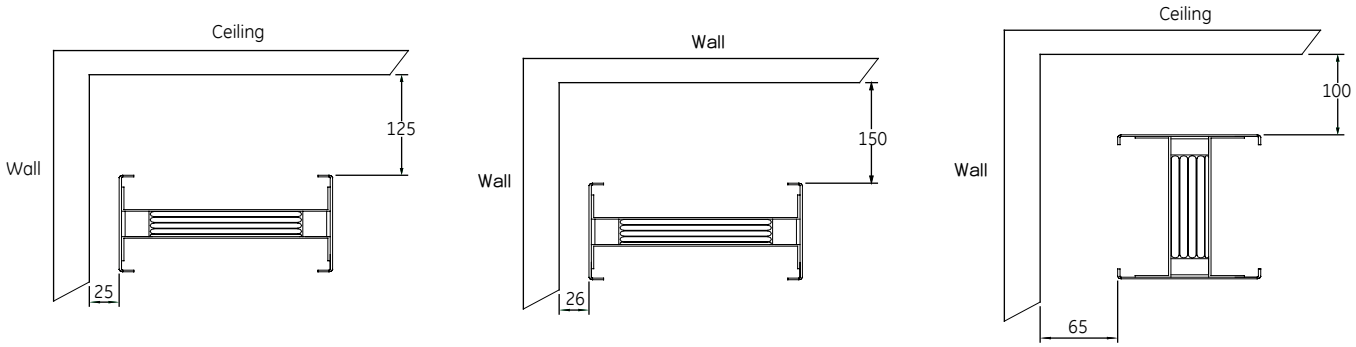

fig.34-1

Minimum clearance required for Plug-in box installation

When the busway is horizontally or vertically installed near the wall, a minimum clearance is required for Plug-in box installation. Pls refer to below table.38-1

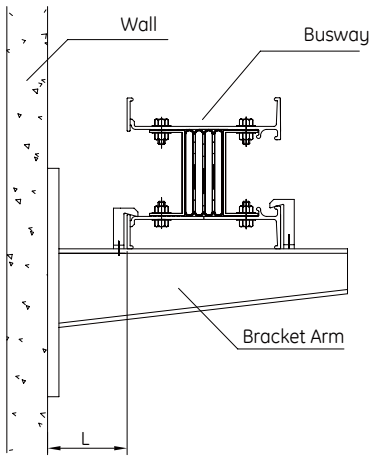

Upright Installation

fig.34-2

Rated current of plugs (A)	100	250	400	630	800	1000
L (mm)	150	195	210	230	260	300

table.34-1

Note: All the dimensions' unit is mm.

Horizontal installation

1.Horizontal through-the-wall installation

For dimensions of through-the-wall installation, please refer to the following figure:

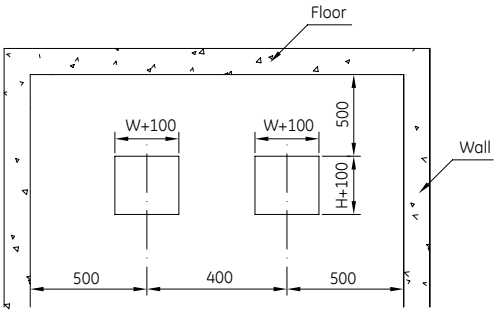

fig.35-1

2.Horizontal installation - trapeze hangers Overhead Support

Holes shall be first drilled in the floor so as to inlay steel expansion bolts (holes may also be drilled on the spot for flexible installation) or pre-bury steel U-channel for welding with hangers. The distance between two adjacent hangers shall not exceed 2m. Please specify your special requirements in order.

There are two forms of horizontal installation. Please refer to the following figure:

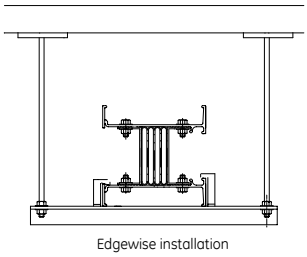

fig.35-2

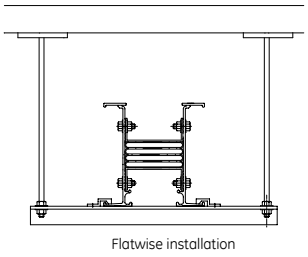

fig.35-3

3.Horizontal installation - wall support

Please pay attention to linearity of the installation hole (i.e. the entire run of supports shall be installed at the same level). For installation types, refer to the graphic representation.

Horizontal installation along the wall may also contain vertical and horizontal installation.

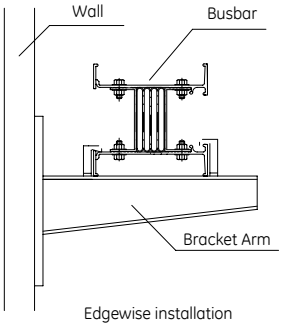

fig.35-4

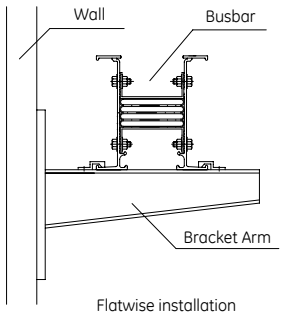

fig.35-5

Installation

Vertical installation

For installing vertical bus run, please refer to the fig.36-1 for dimension of cut holes. It shall be ensured that the spacing between every two runs of busway exceeds 400mm if there're two or more than two vertical runs of busway installed in the same riser. Please refer to the fig.36-1 below:

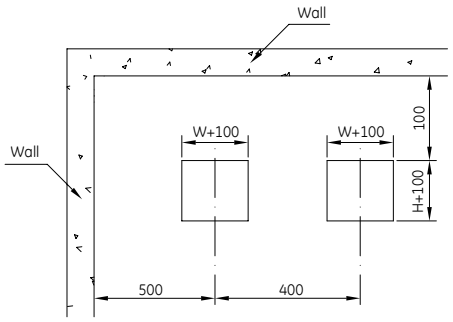

fig.36-1

1. When choosing the spring hangers, the elastic force should be adjusted to (G+F) kilogram (G is the weight of busbar between each floor while F is 5~10 kilograms which refer to the on-site condition) . There are mainly two types of installation:

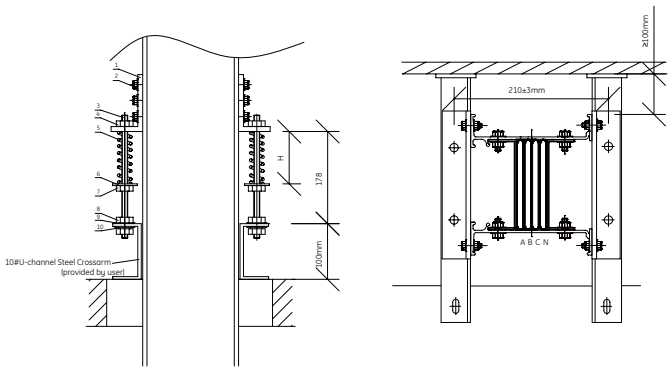

fig.36-2

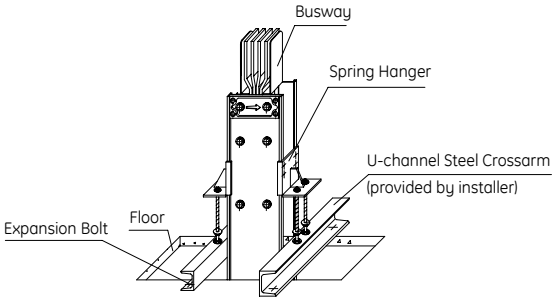

When the hatch is under normal situation

fig.36-3

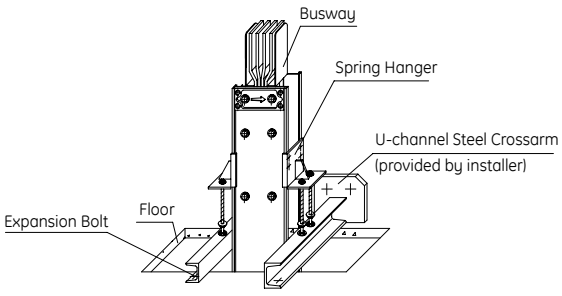

When one edge of the hatch coincides with the wall

fig.36-4

Key points in Vertical installation

- In vertical installation, the distance between joint and ground should not be less than 0.56m, while distance between busway and wall backwards should be more than 0.1m.
- Busway installed in riser should be reinforced in the center (generally when the space between floors exceed 4m or according to the users' special requirements), which may be carried out referring to the figure. The additional supporters is related with busway rating..
- In vertical installation, spring bracket should be installed first and then busway, together with the spring bracket, can be fixed on the channel steel bed. Switch the spring to adjust the nut so that bracket spring can naturally bear the weight of busway.
- The central distance between two neighbor vertical busways should be more than 0.4m. If have the special situation, please contact with project engineer.
- The joint should not be located at the area across the floor.

2. Busway installed in riser should be reinforced in the center (generally when the space between floors exceeds 4m or according to the users' special requirements), which may be carried out referring to the figure (the additional supporters is related with busway rating).

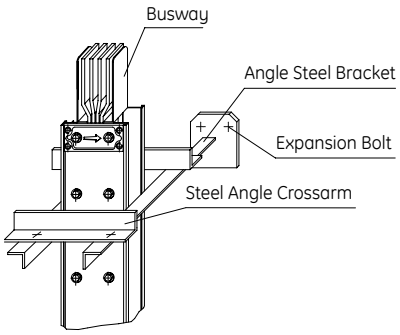

For the Selection of Steel Angle Installation

fig.37-1

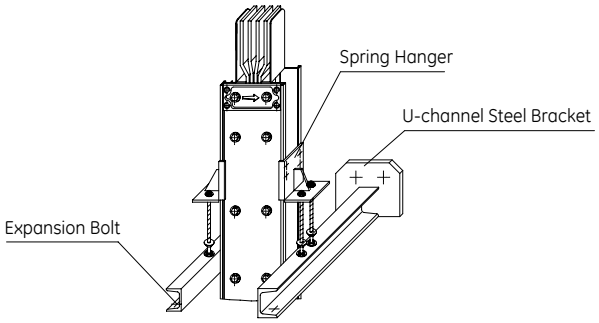

For the Selection of Spring Hanger Installation

fig.37-2

3. The reinforcement of the end of busway installed vertically in riser may be carried out referring to the figure.

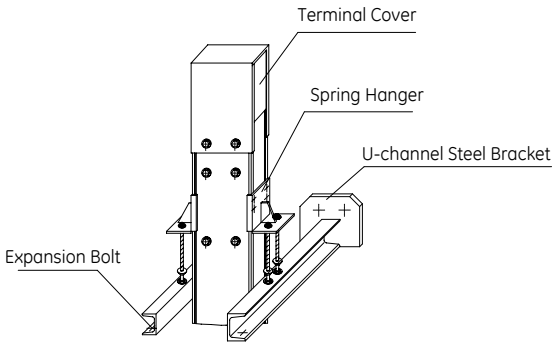

For the Selection of Spring Hanger Installation

fig.37-3

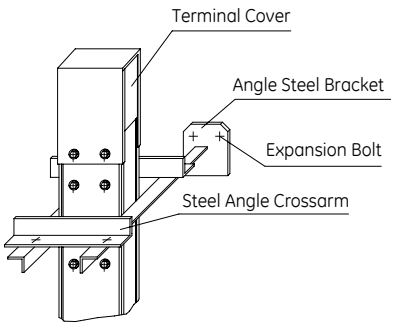

For the Selection of Steel Angle Installation

fig.37-4

4. The reinforcement of the end tap box installed in riser may be carried out referring to the figure.

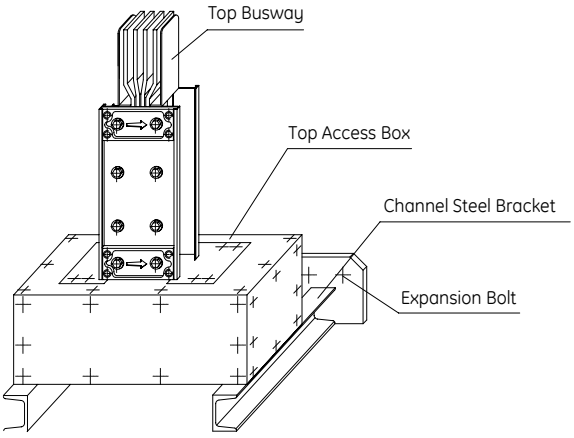

For the Selection of Steel Angle Installation

fig.37-5

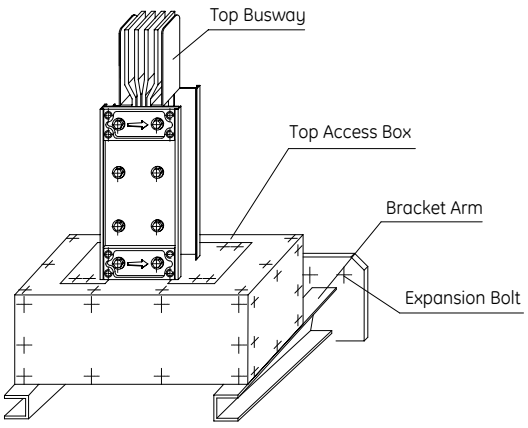

Adoption of Bracket Arm

fig.37-6

Ordering Information

WavePro LT purchase guide

The following information should be noted in building construction drawings and busway arrangement drawings:

- Model, rated current, rated voltage
- Plug-in busway or in feeder busway
- Characteristics of the power supply and protection degree
- All fittings' installation locations and the dimension limits
- Power connecting method
- Surface treatment and color and accessories
- Name, model, specifications, quantity of components and protection degree of the plug

WavePro LT Busway Quotation Inquiry Form

Item	Details	
Conduct type	☐ Copper ☐ Aluminium	
Rated capacity	☐ 100A ☐ 160A ☐ 200A ☐ 250A ☐ 400A ☐ 500A ☐ 630A ☐ 800A ☐ 1000A ☐ 1250A ☐ 1600A ☐ 2000A ☐ 2500A ☐ 3150A ☐ 3200A ☐ 3800A ☐ 4000A ☐ 4500A ☐ 5000A	
Number of phase and wire	☐ 3P3W (L1, L2, L3)	☐ 3P4W (L1, L2, L3, 100%PEN)
	☐ 3P5W (L1, L2, L3, 100%N, 50% Housing Ground)	☐ 3P5W (L1, L2, L3, 100%N, 50% Internal Ground)
	☐ 3P5W (L1, L2, L3, 100%N, 100% Internal Ground)	☐ 3P5W (L1, L2, L3, 200%N, 50% Internal Ground)
	☐ 3P5W (L1, L2, L3, 200%N, 50% Housing Ground)	
Phase sequence and color	☐ Option 1 ☐ Option 2 ☐ Option 3 ☐ Option 4 ☐ Option 5 ☐ Option 6 ☐ Option 7	
Frequency	☐ 50Hz	☐ 60Hz
Voltage	☐ 415V	☐ 690V
Certification	☐ IEC	☐ Others (consult the manufacturer in advance)
Degree of protection	☐ IP40 ☐ IP42 ☐ IP54 ☐ IP65 ☐ Others	
Short withstand current@1s	☐ 10kA ☐ 20kA ☐ 30kA ☐ 50kA ☐ 65kA ☐ 80kA ☐ 100kA	
Color	☐ GE Standard Grey (RAL7000)	☐ Others (please note)
Model	☐ Plug-in busway, Qnty: _____meter (s)	☐ Feed-in busway, Qnty: _____meter (s)
Number of Plug Outlets	☐ 1 ☐ 2 ☐ 3 ☐ 4	☐ One side ☐ Both side
Accessories	☐ L type horizontal elbow (inside N phase), Qnty: _____	☐ L type horizontal elbow (outside N phase), Qnty: _____
	☐ L type vertical elbow (above N phase), Qnty: _____	☐ L type vertical elbow (under N phase), Qnty: _____
	☐ T type horizontal elbow (inside N phase), Qnty: _____	☐ T type horizontal elbow (outside N phase), Qnty: _____
	☐ T type vertical elbow (above N phase), Qnty: _____	☐ T type vertical elbow (under N phase), Qnty: _____
	☐ Terminal, quantity: _____ ☐ Flanged end, quantity: _____	
	☐ Reducer, quantity: _____ ☐ Expansion length, quantity: _____ ☐ Transposition length, quantity: _____	
Plug	☐ MCCB ☐ Others	☐ Rotary handle operation ☐ Manual operation
	Rated current	___A, quantity: ___ ___A, quantity: ___ ___A, quantity: ___ ___A, quantity: ___ ___A, quantity: ___ ___A, quantity: ___
		___A, quantity: ___ ___A, quantity: ___ ___A, quantity: ___ ___A, quantity: ___ ___A, quantity: ___ ___A, quantity: ___
	Short-circuit current	___A
Bracket	☐ Horizontal, quantity: _____	☐ Vertical, quantity: _____
Delivery date		
Mode of shipping		
Packaging requirement		
Address of destination		
Contact Person Info.		
Contact		
Special requirement		

table.38-1

Busway Phase Sequence and Phase Color

Option 1

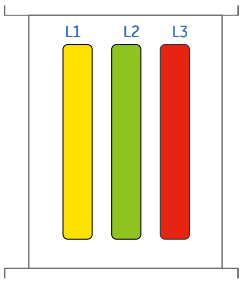

3P3W

Option 2

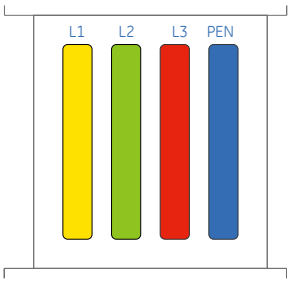

3P4W

Option 3

50% Housing Ground

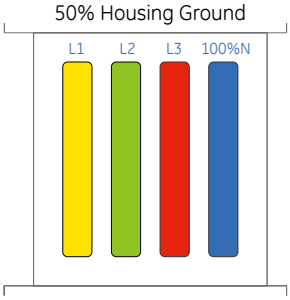

3P5W, 100%N, 50% Housing Ground

Option 4

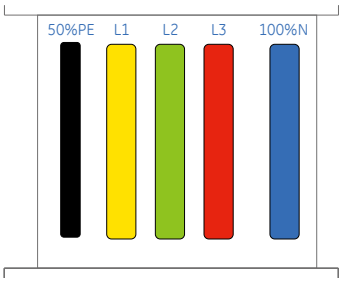

3P5W, 100%N, 50% Internal Ground

Option 5

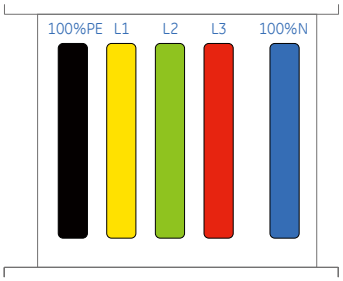

3P5W, 100%N, 100% Internal Ground

Option 6

50% Housing Ground

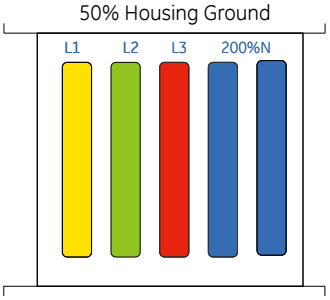

3P5W, 200%N, 50% Housing Ground

Option 7

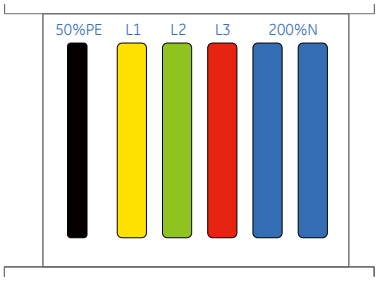

3P5W, 200%N, 50% Internal Ground

WavePro LT Busway System Catalog Ordering Numbers

WavePro LT Busway System can be ordered by catalog numbers. Please refer to the following catalog number system and contact with our engineers to place orders.

WT	B	F1	CSLN	1	00A	C	40	B
WavePro LT	Busway			1：3P3W（L1、L2、L3） 2：3P4W（L1、L2、L3、PEN） 3：3P5W（L1～L3, 100%N, 50% Housing Ground） 4：3P5W（L1～L3, 100%N, 50% Internal Ground） 5：3P5W（L1～L3, 100%N, 100% Internal Ground） 6：3P5W（L1～L3, 200%N, 50% Housing Ground） 7：3P5W（L1～L3, 200%N, 50% Internal Ground）	00：100A 01：160A 02：200A 03：250A 04：400A 05：500A 06：630A 08：800A 10：1000A 12：1250A 13：1350A 16：1600A 20：2000A 25：2500A 31：3150A 32：3200A 38：3800A 40：4000A 45：4500A 50：5000A NAA：Outlet	A：Al C：Cu	40：IP40 42：IP42 54：IP54 65：IP65 00：Spring Hanger and Outlet	Asia except China mainland

F1：Feeder & Accessories For feeder (joint beyond)
F2：Joint
P1：Plug-in（with 1 plug outlet）
P2：Plug-in（with 2 plug outlets）
P3：Plug-in（with 3 plug outlets）
P4：Plug-in (with 4 plug outlets)
P6：Plug-in（with 6 plug outlets）
P8：Plug-in（with 8 plug outlets）

CSLN：Straight Length
CFEN：Flanged End
CTCN：Terminal Cover
LEIN：Edgewise Elbow（N Phase Inboard）
LEIF：Edgewise Elbow with Flanged End（N Phase Inboard）
LEON：Edgewise Elbow（N Phase Outboard）
LEOF：Edgewise Elbow with Flanged End（N Phase Outboard）
LFNN：Flatwise Elbow
LFUF：Flatwise Elbow with Flanged End（N Phase Up）
LFDF：Flatwise Elbow with Flanged End（N Phase Down）
ZFNN：Edgewise Offset
ZFUN：Flatwise Offset（N Phase Up）
ZFDN：Flatwise Offset（N Phase Down）
TEIN：Edgewise T（N Phase Inboard）
TEON：Edgewise T（N Phase Outboard）
TFNN：Flatwise T
CFNN：Flatwise Cross
CENN：Edgewise Cross
TREN：Reducer
ELNN：Expansion Length
TPLN：Transposition Length
OTHR：Other
SPHR：Spring Hanger
OTLT：Outlet

WT	P	R	BP	3P	10	40	FEN
WavePro LT	Busway Plug	M：Manual Mechanism R：Rotary Mechanism	BP：with Record Plus Breaker OT：others	3P：without Neutral Line 3N：with Neutral Line 4P：Others	02： Rating Current 25A 03： Rating Current 32A 04： Rating Current 40A 05： Rating Current 50A 06： Rating Current 63A 08： Rating Current 80A 10： Rating Current 100A 13： Rating Current 125A 16： Rating Current 160A 20： Rating Current 200A 25： Rating Current 250A 32： Rating Current 315A 40： Rating Current 400A 100：Rating Current 1000A	40：IP40 42：IP42 54：IP54	FEN FEH FEL FGN FGH FKN OTH

WT	A	C	DRR	A
WavePro LT	Accessory	C: Connecting Accessory I: Installing Accessory F: Fire Barrier Accessory	DRR：Drop Rod VP5：Steel Pillar (5#Angle Steel) VP8：Steel Pillar (8#Channel Steel) CB5：Cross Beam (5#Angle Steel) CB8：Cross Beam (8# Channel Steel) BRH：Bracket (Horizontal Installation) BRV：Bracket (Vertical Installtion,Angle Steel) ETB：End Tap Box HPP：Horizontal Press Plate VPP：Vertical Press Plate FLC：Flexible Connection CNB：Connecting Bar OTH：Others	00：Spring Hanger and Outlet 03：100~250A 04：400A 05：500A 06：630A 08：800A 10：1000A 12：1250A 13：1350A 16：1600A 20：2000A 25：2500A 31：3150A 32：3200A 38：3800A 40：4000A 45：4500A 50：5000A

GE Industrial Solutions assumes no obligation of notice to holders of this document with respect to changes and reserves the right to explain finally for this publication.

GE Energy
Industrial Solutions

GE Asia Headquarters China
4F, Building 2, CTP, No.1 Hua Tuo Rd.
Zhang Jiang Hi-Tech Park
Pudong, Shanghai 201203
T : +86 21 3877 7888
F : +86 21 3877 7600

Australia
125-127 Long Street
Smithfield, Sydney, NSW 2164
T : +61 2 8788 6911
F : +61 2 8788 7224

Indonesia
BRI II Tower, 27th floor
Jl. Jend. Sudirman No. 44-46
Jakarta 10210
T: +62 21 573 0430
F: +62 21 574 7089

India
The Millenia, 6F, Tower B, #1&2
Murphy Road, Ulsoor Bangalore
560 008
T : +91 80 4143 4000
F : +91 80 4143 4199

HongKong
8F, The Lee Gardens, 33 Hysan
Avenue Causeway Bay, HongKong
T : +852 2100 6800
F : +852 2376 0013

Japan
11F, Akasaka Park Bldg.,5-2-20
Akasaka Minato-ku, Tokyo
107-0052
T: +81 3 5544 6780
F: +81 3 3589 3372

Korea
3F, GE Tower, 71-3, Chungdam-
Dong, Kangnam-Gu, Seoul 135-100
T: +82 2 6201 4501
F: +82 2 6201 4545

Malaysia
Level 6, 1 Sentral, Jalan Travers,
Kuala Lumpur 50470
T : +603 2273 9788
F : +603 2273 3481

New Zealand
Level 1, 8 Tangihua Street.
Auckland. North Island.
T : +64 9 353 6706
F : +64 9 353 6707

Philippines
8F Net Cube Building, 30th Street
Corner 3rd Avenue, Crescent West Park
Global City Taguig 1634
T : +63 2 877 7000
F : +63 2 846 0629

Singapore
240 Tanjong Pagar Road
#06-00 GE Tower
Singapore 088540
T : +65 6326 3404
F : +65 6326 3015

Taiwan
6F, No.8, Sec. 3, Minsheng E. Road
Taipei 10480
T : +886 2 2183 7000
F : +886 2 2516 6829

Thailand
7th Floor, Capital Tower, All Seasons Place
87/1 Wireless Road, Lumpini
Pathumwan, Bangkok 10330
T : +66 2 648 0199
F : +66 2 648 0100

Vietnam
7F, Saigon Center 65 Le Loi
Boulevard, Dist 1,
HoChiMinh City
T : +84 8 8219 254
F : +84 8 8219 400

Printing Code: IN201101312EN

Advance Shielding Technology

"Professional in EMC Measurement & Consultancy, EMC Shielding"

THE ELECTROMAGNETIC SPECTRUM

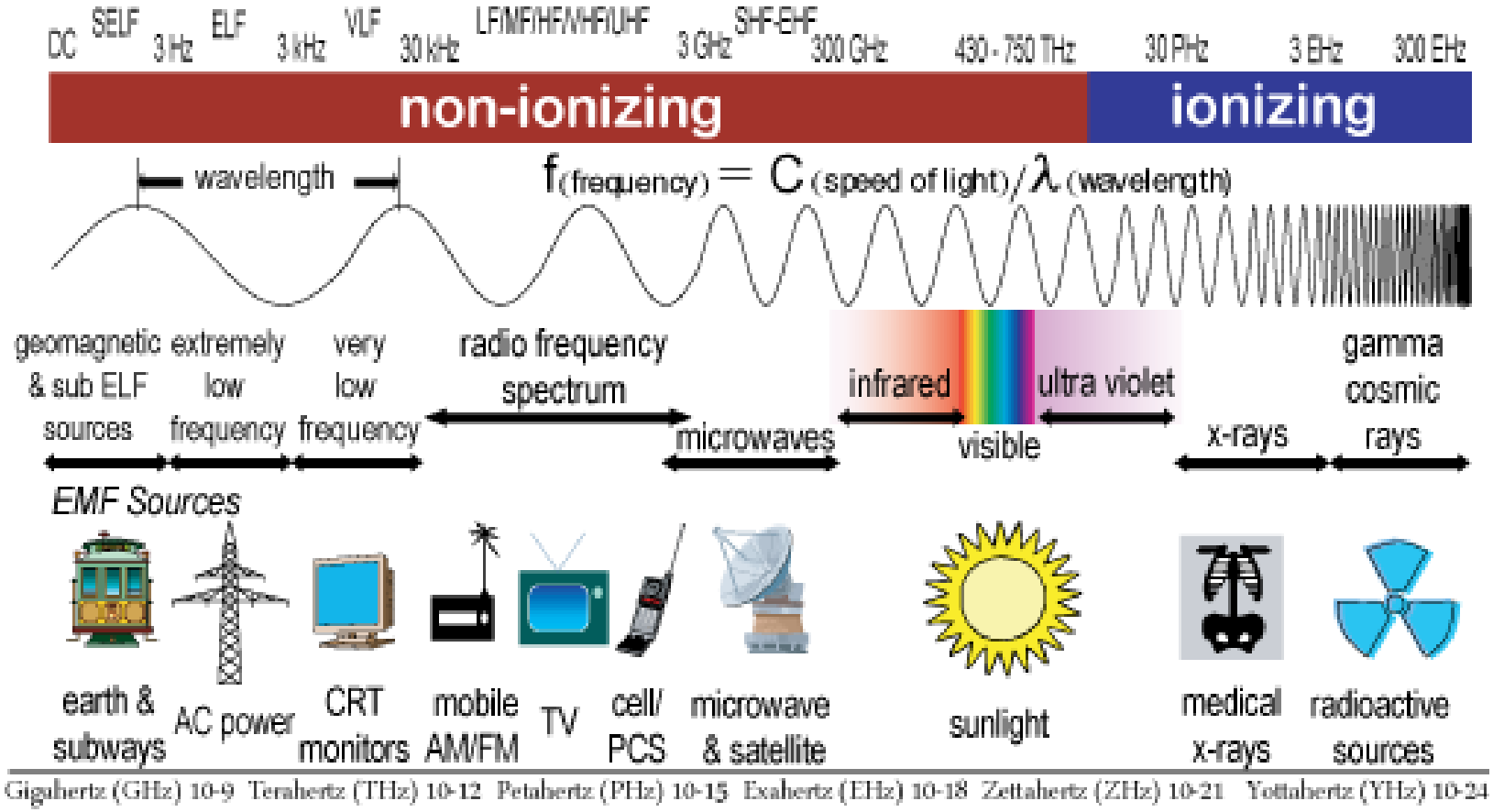

ElectroMagnetic Shielding

Spectrum – Low Frequency

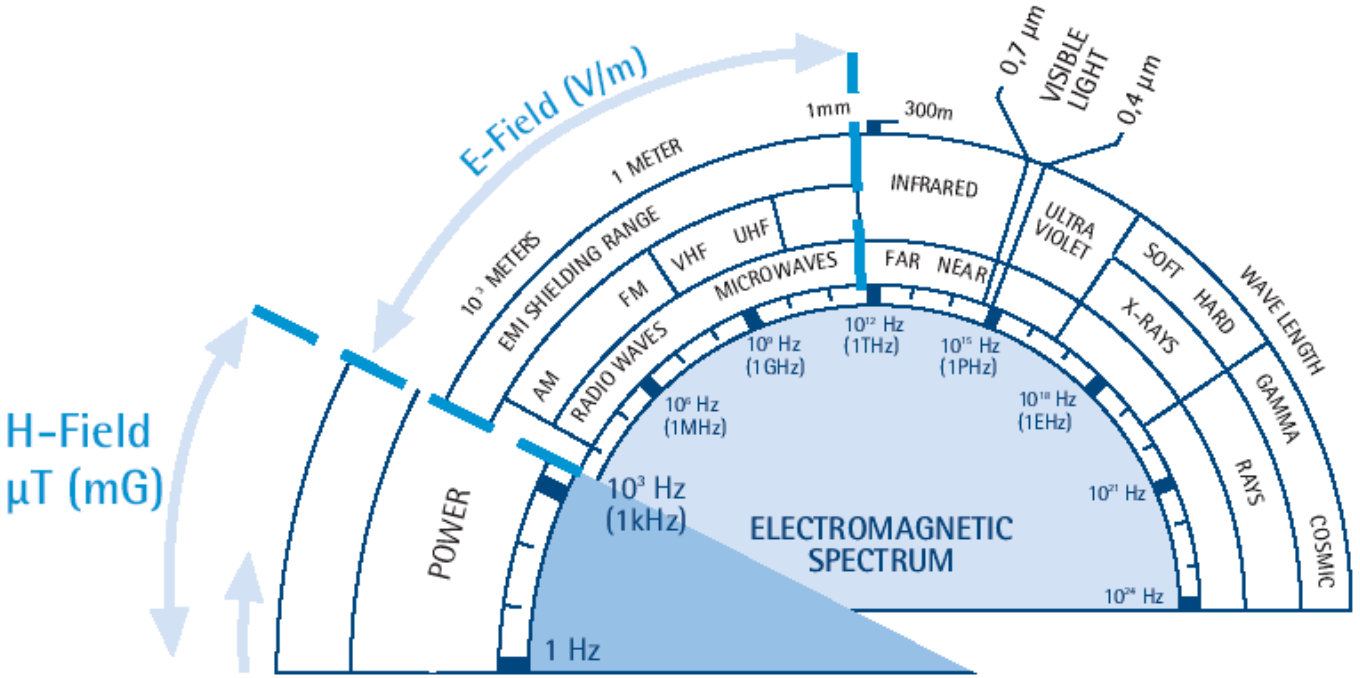

Electric Field: E
- f (Voltage)
- High Freq.: above 30 KHz up to 1 THz

Magnetic Field: H
- f (Amperage)
- Low Freq.: above 0Hz up to 1-30 KHz

ElectroMagnetic Shielding

EMF Sources

Low Frequency Magnetic Fields

- Transformers
- Low voltage electric cabinets
- Low voltage power lines
- High voltage power lines
- Train lines
- Subway lines
- UPSs
- etc.

High Frequency Electric Fields

- Radars
- Radio transmitters
- Cell phone relay antenna
- Radio and TV relay antennas
- Wifi
- etc.



ElectroMagnetic Shielding

EMF Consulting
Consultancy service regarding electro magnetic protection. Protect your equipment and people!

Tem/Sem
Protect your equipment for wrong measure readings.



Tempest
Protect your data against electro magnetic attacks, it can be easily robbed or destroyed.

Bugging protective chamber
Tempest plus acoustic protection. Protect your data against electro magnetic attacks, it can be easily robbed or destroyed.

Smart MRI Room
RF – MR Systems Generate RF Operating Frequency
Magnetic Shielding – MR's Are Superconducting Magnets
High Magnetic Fields Are Potentially Dangerous

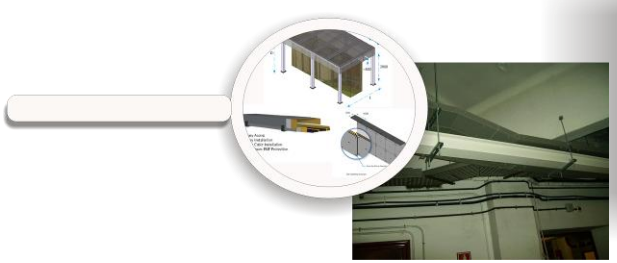

Smart Shield
Protect people and equipment against electro magnetic fields.

ElectroMagnetic Shielding

EMF Effects on Human Beings

EMF Effects on Human Beings

-U.V. Radiations: skin problems (reduction of Langerhans cells) and eyes.
-Infrared Radiations: thermal effects
-Radiofrequency (R.F.): thermal effects and bioelectric interferences, genetic transmission problems, nervous and heart system.

Some relevant studies conducted to date:

-National Institute of Occupational Health (Magnetic Fields and Cancer: cellular study. Bo Holmberg): research on cancer tumors and EMF exposure.
-Division of Biomedical and Behavioral Sciences, National Institute for Occupational Safety and Health (OSHA) (Cincinnati) (Magnetic Field exposition in skin cells, J. Snawder, R. Edwards): research on tumor and magnetic fields of 100 µT over a 14 day period.
-Electric Power Research Institute (Palo Alto) (Magnetic Fields and Animal Cells, J. Mc.Cann, R. Kavet, C. Rafferrty): research on tumor and magnetic field.

Note: Although none of the studies conducted to date can absolutely correlate EMF and human health effects, AST strongly recommends to apply the ALARA (As Low As Reasonable Achievable) principle in accordance with NCRP recomendation.

ElectroMagnetic Shielding

Norms and Recommendations

Electronic Equipment

- ***Magnetic Field – Low Frequency***
  - ***EN/IEC 61000-6-1:*** "Inmunity for Electronic Equipment up to 3,75 µT"
  - ***EN 55024:*** "Inmunity for I.T. Equipment up to 1,25 µT"
  - ***Requeriments semicon manufacturers:*** "Magnetic Field up to 0,03 µT"
  - ***Requirements MRI (Magnetic Resonance) manufacturers:*** "Magnetic Field up to 1 µT"
- ***Others:***
  - ***Real wordwide experience cases:*** *"Computer screens flicker form* 0,4µT magnetic field"

Human beings

- ***Magnetic Field – Low Frequency***
  - ***ICNIRP:*** "Norm for people up to 100 µT"
  - ***ICNIRP / ACGIH:*** "Norm for heart problems up to 50 µT"
  - ***NCRP:*** "Max. Recommended level 1 µT"
  - ***AGNIR-HPA***: "Max. Recommended level 0,4 µT"
  - ***Others:*** "Countries like Switzerland, New Zeland and some states of USA up to 1 - 2 µT"
- ***Electric Field – Low Frequency***
  - ***ICNIRP / ACGIH:*** "Norm for people up to 5 kV/m"
  - ***ICNIRP / ACGIH:*** "Norm for heart problems people up to 1 kV/m"

ElectroMagnetic Shielding

SmartShield™

CABLE TRAYS



- Easy Access
- Easy Installation
- Safe Cable Installation
- Maximum EMF Protection
- Cooling



Ventilation

BACKPLANES

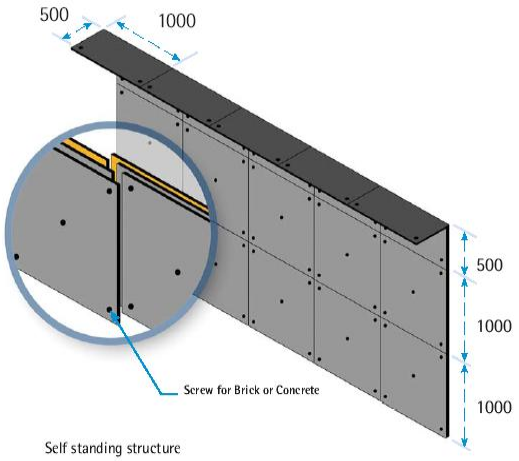

TRANSFORMER CAGES

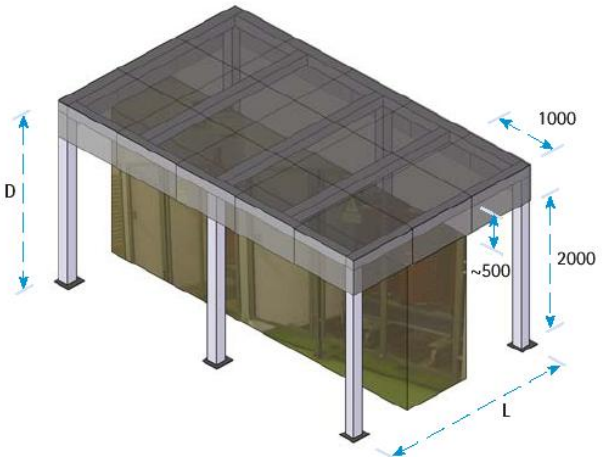

AVAILABLE WITH FOUR LEVELS OF PROTECTION:

Standard Performance, High Performance, Ultra High Performance and Mu-ultra High Performance

ElectroMagnetic Shielding

SmartShield Products





ElectroMagnetic Shielding

SMART SHIELD Products

- Standard Product
- TÜV Certificate
- Own Technology
- Very Easy Installation

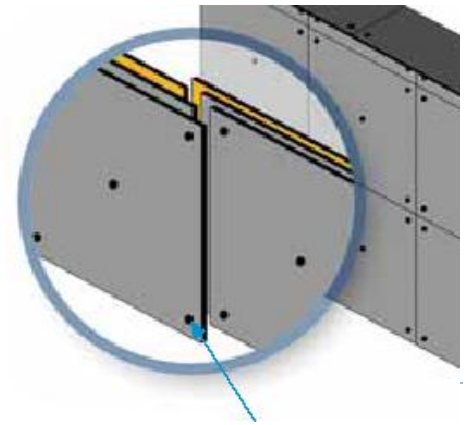



TÜV

Subject: Shielded Trays and Backplanes Electro-Magnetic Fields Attenuation Test according to the levels required by the standard IEC/EN 61000-4-8 and NEBS.

This is to certify that the undersigned inspector of TÜV Internacional Cataluña, TÜV International Group Rheinland, S.L., has witnessed and inspected the test done by AST, S.L. according the test protocol "S-2004/05-STD" about the Shielding effectiveness of the products:

Shield Trays
and
Backplanes)

The results of the test has been favourable in the accomplishment of the attenuation levels demanded by both the standard IEC/EN 61000-4-8 and recommendations by NEBS.

The present statement letter is signed in Barcelona, 05th May, 2006.

TÜV

* For more details see the Complete Result Test Report 15/709529/05

ElectroMagnetic Shielding

Practical Applications

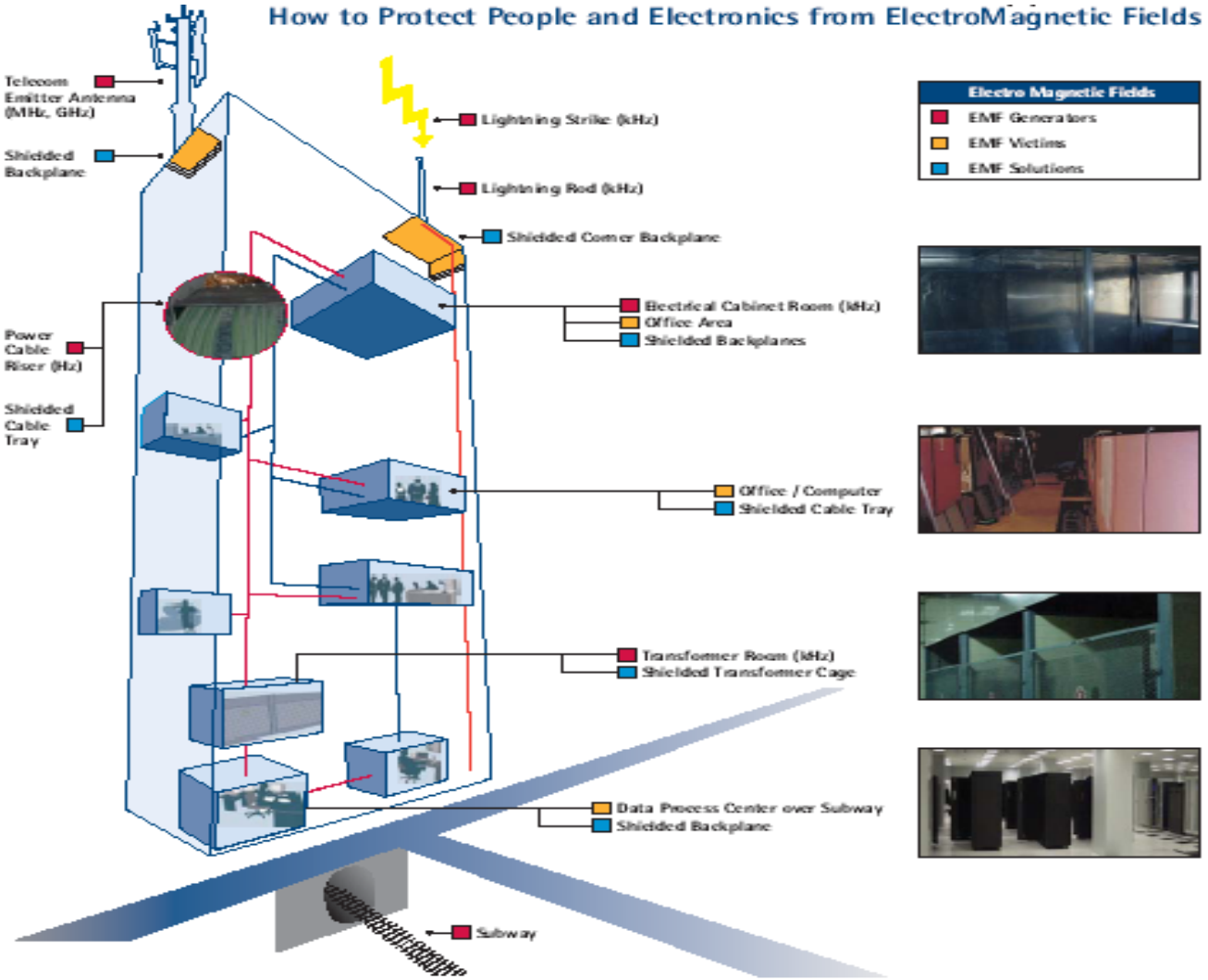

Project References

NO.	JOB REFERENCE	SCOPE OF WORK
1 .	NTU Techno Plaza	EMF Shielding work
2 .	Advance Mirco Device	EMF Measurement & Analysis
3 .	XILINX New Plant	EMF Consultancy & Analysis
4 .	Seagate 2 @ Woodland Loop	EMF Measurement
5 .	Reuters Singapore (Data Center)	EMF Analysis for Busbar
6 .	Global Switch Data Center	EMF Measurement
7 .	NTU Teaching & Laboratory Facility	EMF Shielding
8 .	Equinix Data Center	EMF Measurement & Study
9 .	UOB Plaza II	EMF Measurement & Calculation
10 .	Singtel Com-centre II	EMF Measurement
11 .	Global Switch Level 2 @ Tai Seng	EMF Measurement
12 .	Fusionopolis Level 4, 37 Riser	EMF Calculation & Study
13 .	NTU School of Physical 2 Mathematical Sciences	EMF Shielding
14 .	Visa Center @ Singpost	EMF Measurement & Calculation
15 .	Asia Square Tower 1	EMF Consultancy & Analysis
16 .	Siltronic Singapore	EMF Measurement

Project References

NO.	JOB REFERENCE	SCOPE OF WORK
17 .	SEAGATE Crystal Room @ Woodlands	EMF Consultancy & Measurement
18 .	Overseas Union House	EMF Shielding
19 .	NUS Computing Department	EMF Consultancy & Measurement
20 .	NTU New Lab	EMF Measurement
21 .	BHP Billiton @ MBFC2	EMF Consultancy
22 .	Fort Building Data Center	EMF Shielding
23 .	Clean Tech	EMF Shielding

ElectroMagnetic Shielding

Main customers



PARK

BUS WAYS



Engineered Solutions for Power Distribution

Bus Ways

Park bus runs are complete lines of non-segregated phase bus designed for inter-connecting groups of metal-enclosed or metal-clad switchgear, power transformers or other related equipment. Bar type, with aluminum or copper conductors, is available in 600 volt, 5, 15 and 38kV classes. All conductors are individually supported on insulating members. All necessary equipment–connection flanges, wall entrance seals, transformer and/or equipment taps, elbows, offsets, wall supports, splicing materials, terminal connectors – is included to make a complete installation. The bus duct is designed, manufactured and tested in accordance with ANSI Standard C37.20.

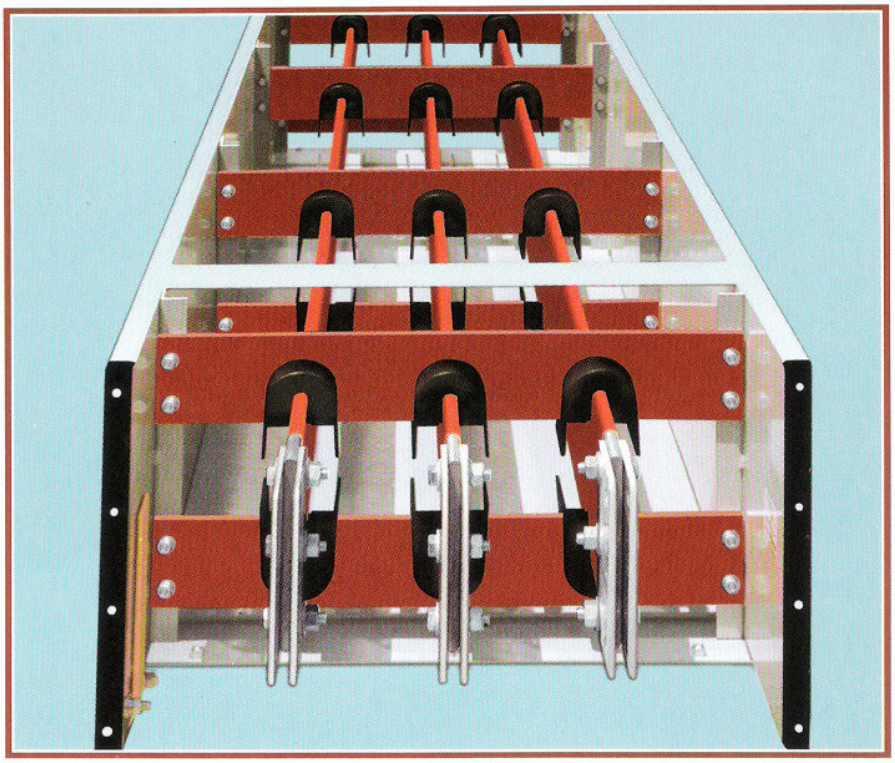

FEATURES & ADVANTAGES

- COMPACT AND LIGHTWEIGHT
- MAXIMUM DEPENDABILITY
- FACTORY ASSEMBLED
- STURDY, RIGID CONSTRUCTION
- CLEAN, ATTRACTIVE APPEARANCE

Custom Engineered – The entire bus system is specifically designed to suit the requirements of each installation.

Low Installation Cost – All manufacturing and assembly procedures requiring skilled labor are factory performed. Field installation requires only placing the bus sections on the supports, bolting splices, and connecting the ends to the apparatus terminals.

High Basic Impulse Insulation Levels – The basic impulse level of the bus duct is equal to or greater than that of the associated switchgear or other equipment.

Metal Enclosed
Non-Segregated Phase Types

APPLICATIONS

Available in a wide range of ratings to allow proper application for a variety of installation conditions. Park bus runs can be applied in both indoor and outdoor service.

A complete line of bus sections, including the following, is available

1. Terminating sections for transformers and switchgear
2. T-taps and Y-taps.
3. Off-sets and elbows.
4. Wall entrance seals.

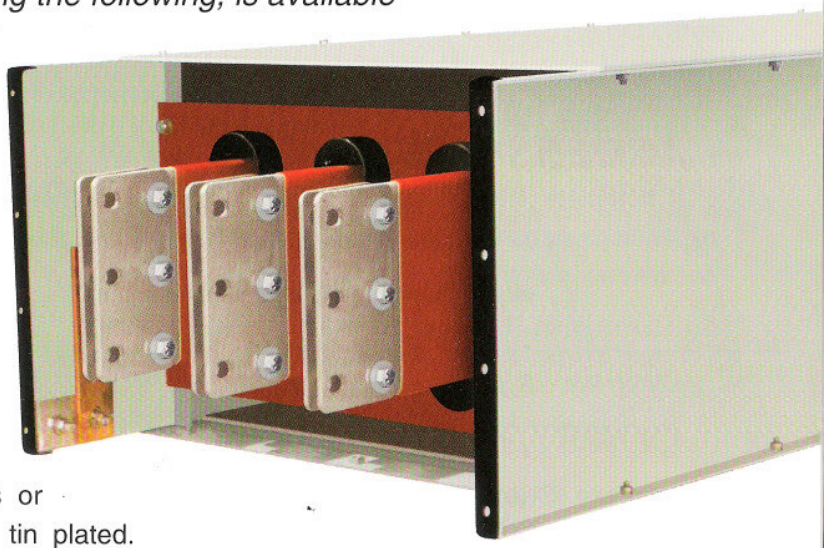

BAR TYPE BUS DUCT

The bus duct conductor is available in either tin-plated, full round edge, type #110, flat copper bars or electrical conductor grade aluminum alloy #6101-T61 tin plated. Ducts may be specified in voltage classes of 600 volts, 5kV, 15kV and 38kV with current ratings to 12000 amperes as standard. Standard bus bracing is 65KA – 600V, 40KA – 5kV, 40KA – 15kV and 20KA – 38kV.

With the exception of the 600 volt class, all phase bus work is insulated with flame retardant Epoxy insulation. All bus joints are plated and booted, utilizing standard insulating materials.

All bus work is supported on molded, flame retardant, glass-reinforced, polyester supports to meet the momentary withstands requirement of the application. Post type, porcelain bus supports are also available as an option. If an insulated neutral is required, it is necessary to modify the housing.

Where splice plates are required, they are equal in cross section to the main bus. All bus joints are made with one-half inch zinc plated, steel grade 5 hardware, or stainless.

BUS HOUSING

Both indoor and outdoor bus are totally enclosed and gasketed, and equipped with space heaters, when required. The top and bottom covers are removable to provide easy access to the bus. Painted aluminum, or painted steel housings are available in current ratings up to 2000 amperes. Above this current only aluminum enclosures are supplied. Where a bus duct passes through a wall from indoor to outdoor, a weatherproof seal with a vapor barrier to prevent the passage of vapors is provided. Both indoor and outdoor bus runs are supplied in unbroken sections as specified by the purchaser, up to a maximum of 30 feet.

Space heaters are mounted inside the outdoor housings to prevent condensation. They are 500 watt, 240 volt heaters wired to a 120 volt source. With this arrangement each heater will produce approximately 125 watts which prolongs the life of the heater element. They are spaced approximately every seven to ten feet along the length of outdoor bus run. The wiring is terminated in a junction box for connection to the customer's source. This junction box is normally located on the side of the duct, inside the building, just beyond the wall flange.

Bus Ways

BUS SUPPORTS

Trapeze type hanger bars for every ten feet of bus are available as part of the assembly on indoor installations to support the bus runs. Wall brackets for vertical or horizontal mountings, and self-supporting bus runs are also available. Outdoor duct supports are provided by purchaser, unless specified at time of quote. One support for every ten feet of duct is required.

ACCESSORIES

A complete line of elbows, tees, terminations for transformers and switchgear, phase transpositions, expansions or earthquake joints, wall entrance seals, flexible connectors, bushing stud connectors and terminal enclosures is available.

CONSTRUCTION OPTIONS

Momentary (Short Circuit) Ratings

Voltage Class	Amperage	
600V	65KA 100KA 150KA 200KA	Standard Optional Optional Optional
5KV	40KA 80KA 100KA	Standard Optional Optional
15KV	40KA 80KA 100KA 150KA	Standard Optional Optional Optional
38KV	20KA 35KA 40KA	Standard Optional Optional

Ground Bus

Bar Size & Location Copper or Aluminum
External 1/4" x 2" Internal 1/4" x 2" External 1/4" x 4" Internal 1/4" x 4"

Bus Enclosures

Material & Finish	
Painted Aluminum (1/8" Nominal) Painted 14 Gauge Steel Painted 11 Gauge Steel Unpainted 14 Gauge 304 Stainless Steel Unpainted 14 Gauge 316 Stainless Steel	Standard Optional Optional Optional Optional

GENERAL PRODUCT INFORMATION

Park Bus Duct is custom designed, manufactured and tested as per latest ANSI C.37.20 standards to meet customer specifications. It is a completely coordinated package of equipment with all the auxiliary material and supports for connecting transformers, switchgear, MCC's and motors.

FEATURES

- Non-segregated phase bus
- 600V thru 38KV
- Up to 12000A ratings
- Aluminum, steel or stainless steel housing
- Insulated with powder epoxy applied by fluidized bed process
- Complete line of fittings provides for any configuration
- Indoor trapeze and outdoor column support

Flanged Ends

A flanged end is used to terminate the bus into switchgear, motor control centers, switchboards, or any rigid bus-to-bus connection. It consists of a gasketed equipment flange, up to 1'-0" of 3P-3W conductor (3P-4W as applicable), necessary insulation tapes, and required bolting hardware.

Cable Tap Box

A cable tap box includes a gasketed and accessible termination box, lugs, necessary insulation tape (between bus and lugs only), and required bolting hardware. Lug sizes and quantity should be specified by purchaser.

Transformer/Generator Connection

Will include the same components as a flanged end plus one set of flexible braid type connectors and a terminal box (if required).

Bushing Box (Weatherhead)

A bushing box is used on service entrance run where the cable connection to the bus must be made via porcelain bushings. It is comprised of the same components as a transformer connection plus 3 through stud type apparatus bushings, bushing stud connectors (lug pads) and a strip heater.

Ground Bus

The bus housing is designed and constructed to provide an electrically continuous ground path. The side rails of the bus housings are capable of carrying the full rated phase current continuously and, under short circuit conditions, are capable of carrying up to 100KA RMS asymmetrical fault current for 167ms. Consequently, a separate ground bus is not necessary unless specified.

Wall Entrance Seal

A wall entrance seal consists of wall throat, wall flange (one side of wall only), and a barrier which prevents air or vapor from passing from one room to anther or from outdoors to indoors. It also carries a 1 hour fire rating.

Equipment Entrance Seal

An equipment entrance seal is needed when a barrier is required to prevent the passing of flame and/or gas between the bus housing and the terminating equipment.

Expansion Fittings

An expansion fitting is used to counteract the strain placed on the bus due to the expansion and contraction of the building or the bus itself. Expansion fittings should be used whenever the bus run crosses a building expansion joint and whenever a straight run of bus exceeds 60 feet.

Flexible Housing (Misalignment) Collar

This is required at terminations or wall penetrations when vibrations due to seismic forces may cause damage to the bus. It may also be used to adjust for the "settling" of terminating equipment after installation.

Supporting Steel (Hangers)

Supports should be added on the basis of one for every 5 ft. for indoor and one for every 12-20 ft. for outdoor. Indoor supports are a trapeze type hanger while outdoor supports are a single or double column type support.

Hazardous or Seismic Locations

Consult Park for bus runs which are to be installed in a location which is classified as hazardous or in a Zone 3 or Zone 4 seismic location.

Housings

- Aluminum, steel and stainless steel housing are available to meet a variety of environments. Non-magnetic housings are supplied at ratings above 2000 amperes.
- Outdoor housings are weatherproof and furnished with screened breathers and electric space heaters for condensation control.
- Covers are gasketed sloped to shed rain and are removable top and bottom.
- Ventilated indoor buses with louvers top and bottom covers are available.
- 500-watt, 240-volt heaters, operated at 120 volts and mounted via weatherproof junction box for easy removal, are supplied on 7' to 10' centers on outdoor bus systems. Facilities are supplied for connecting heaters to purchaser's power supply.

Conductors

Buses are supplied with copper or aluminum conductors per purchaser's specifications. Tin or silver-plated contact surfaces at all joints or terminations. Internal or external ground bars or neutral bars are available as required

Insulation

Bus bars are insulated with fluidized bed epoxy, and mounted with corona control devices in insulator support inserts.

Bus Ways

Data Tables

5000 & 15000 VOLTS			WEIGHT	DUCT DIMENSIONS(IN)					DUCT DIMENSIONS (INCHES MIN)										RESISTANCE	WATTS PER 3 PHASE FOOT	REACTANCE	INPEDANCE
	AMPERES	FIG	CONDUCTORS	LBS/FT	A	B	C	D	E	F	G	H	I	J	K	L	M	N	O	OHMS X 10^6		OHMS X 10^6	OHMS X 10^6
COPPER	1200	1	(1) 1/4 x 4	29	7	14	28	15 1/2	-	24	24	24	24	48	20	18	480	48	24	11	47.66	51.2	52.5
	1600	1	(1) 1/4 x 5	35	7	15	28	16 1/2	-	24	24	24	24	48	20	18	480	48	24	9.48	72.83	46.4	47.3
	2000	1	(1) 5/8 x 4	50	7	14	28	15 1/2	-	24	24	24	24	48	20	18	480	48	24	5.54	66.42	49.3	49.6
	2500	1	(1) 1/2 x 6	59	7	16	28	17 1/2	-	24	24	24	24	48	20	18	480	48	24	4.63	86.88	41.4	41.7
	3000	1	(1) 1/2 x 8	77	7	18	28	19 1/2	-	24	24	24	24	48	20	18	480	48	24	3.58	96.77	35.3	35.5
	3200	1	(1) 1/2 x 8	77	7	18	28	19 1/2	-	24	24	24	24	48	20	18	480	48	24	3.67	112.76	35.3	35.5
	3500	2	(2) 1/2 x 6	122	8	16	32	17 1/2	3	28	28	28	28	48	22	18	480	48	28	2.33	85.78	25.3	25.4
	4000	2	(2) 5/8 x 6	137	8	16	32	17 1/2	3	28	28	28	28	48	22	18	480	48	28	2.11	127.88	28.9	29.0
	4500	2	(2) 1/2 x 8	150	12	24	40	25 1/2	3	36	36	36	36	48	26	18	480	48	36	1.83	111.14	26.9	27.0
	5000	2	(2) 5/8 x 8	168	12	24	40	25 1/2	3	36	36	36	36	48	26	18	480	48	36	1.59	119.47	26.6	26.7

38000 VOLTS			WEIGHT	DUCT DIMENSIONS(IN)					DUCT DIMENSIONS (INCHES MIN)										RESISTANCE	WATTS PER 3 PHASE FOOT	REACTANCE	INPEDANCE
	AMPERES	FIG	CONDUCTORS	LBS/FT	A	B	C	D	E	F	G	H	I	J	K	L	M	N	O	OHMS X 10^6		OHMS X 10^6	OHMS X 10^6
COPPER	600	1	(1) 1/4 x 4	30	12	24	49	25 1/2	-	45	45	45	45	48	31	18	480	59	45	9.72	10.50	63.6	64.3
	1200	1	(1) 1/4 x 4	30	12	24	49	25 1/2	-	45	45	45	45	48	31	18	480	59	45	10.80	46.52	63.6	64.5
	1600	1	(1) 1/4 x 5	32	12	24	49	25 1/2	-	45	45	45	45	48	31	18	480	59	45	9.26	71.12	58.7	59.5
	2000	1	(1) 5/8 x 4	35	12	24	49	25 1/2	-	45	45	45	45	48	31	18	480	59	45	5.43	65.19	61.6	61.9

600 VOLTS			WEIGHT	DUCT DIMENSIONS(IN)					DUCT DIMENSIONS (INCHES MIN)										RESISTANCE	WATTS PER 3 PHASE FOOT	REACTANCE	INPEDANCE
	AMPERES	FIG	CONDUCTORS	LBS/FT	A	B	C	D	E	F	G	H	I	J	K	L	M	N	O	OHMS X 10^6		OHMS X 10^6	OHMS X 10^6
COPPER	1200	1	(1) 1/4 x 4	29	7	14	28	15 1/2	-	24	24	24	24	48	20	18	480	48	24	9.16	39.56	51.2	52.0
	1600	1	(1) 1/4 x 5	35	7	15	28	16 1/2	-	24	24	24	24	48	20	18	480	48	24	9.12	70.02	46.4	47.3
	2000	1	(1) 5/8 x 4	50	7	14	28	15 1/2	-	24	24	24	24	48	20	18	480	48	24	5.34	64.07	49.3	49.6
	2500	1	(1) 1/2 x 6	59	7	16	28	17 1/2	-	24	24	24	24	48	20	18	480	48	24	4.47	83.72	41.4	41.7
	3000	1	(1) 1/2 x 8	77	7	18	28	19 1/2	-	24	24	24	24	48	20	18	480	48	24	3.15	84.92	35.3	35.5
	3200	1	(1) 1/2 x 8	77	7	18	28	19 1/2	-	24	24	24	24	48	20	18	480	48	24	3.53	108.42	35.3	35.5
	3500	2	(2) 1/2 x 6	122	8	16	32	17 1/2	3	28	28	28	28	48	22	18	480	48	28	2.31	84.91	25.3	25.4
	4000	2	(2) 5/8 x 6	137	8	16	32	17 1/2	3	28	28	28	28	48	22	18	480	48	28	2.07	125.75	28.9	29.0
	4500	2	(2) 1/2 x 8	150	12	24	40	25 1/2	3	36	36	36	36	48	26	18	480	48	36	1.81	109.95	26.9	27.0
	5000	2	(2) 5/8 x 8	168	12	24	40	25 1/2	3	36	36	36	36	48	26	18	480	48	36	1.57	117.90	26.6	26.7

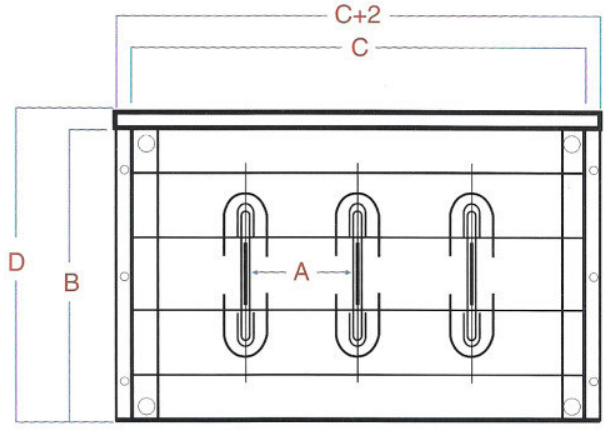

FIGURE 1

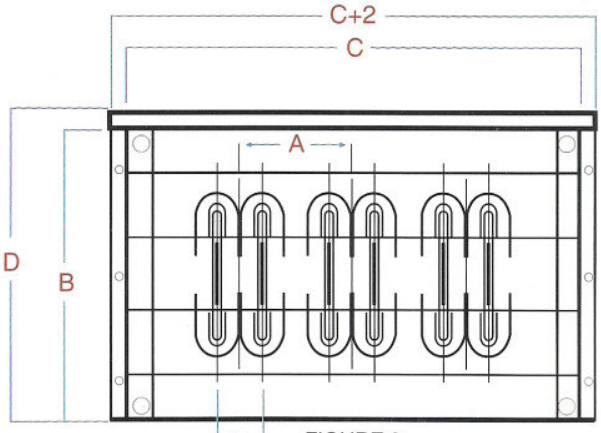

FIGURE 2

Elbows, Tees and Transition Connections

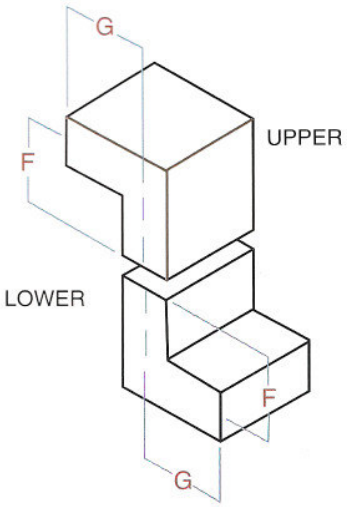

VERTICAL ELBOWS

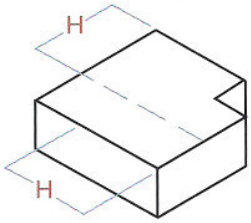

HORIZONTAL ELBOW

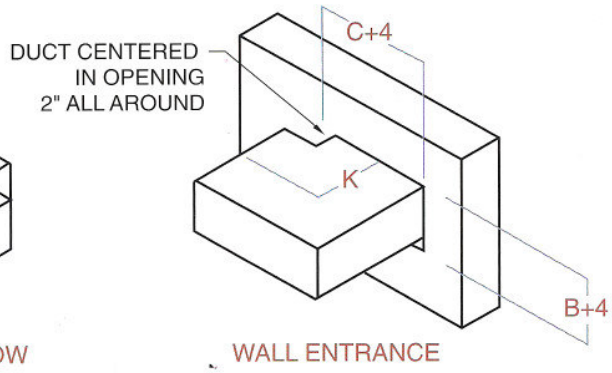

WALL ENTRANCE

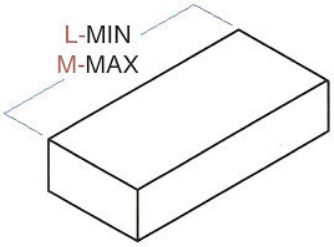

STRAIGHT

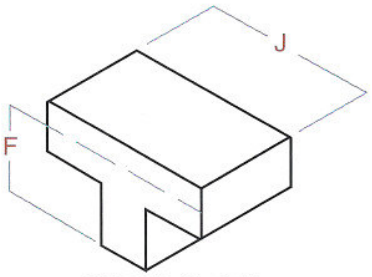

VERTICAL TEE

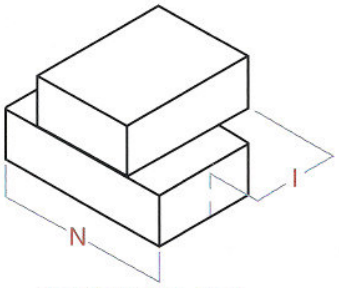

HORIZONTAL TEE

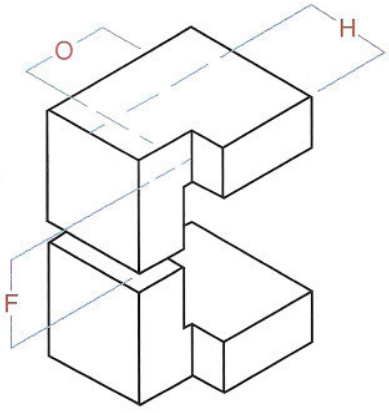

TRANSITION

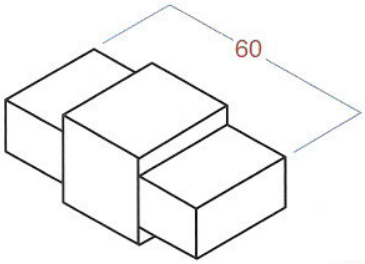

TRANSPOSITION

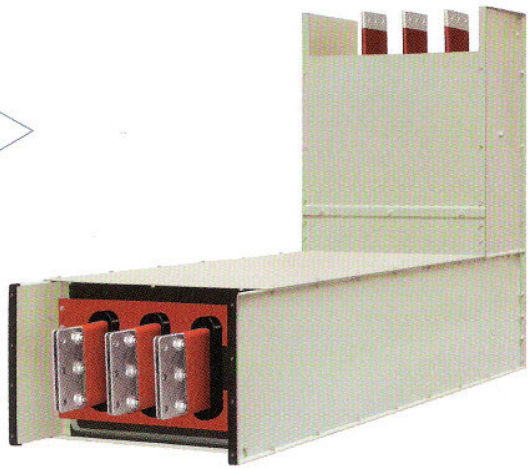

Typical Bus Duct Installation

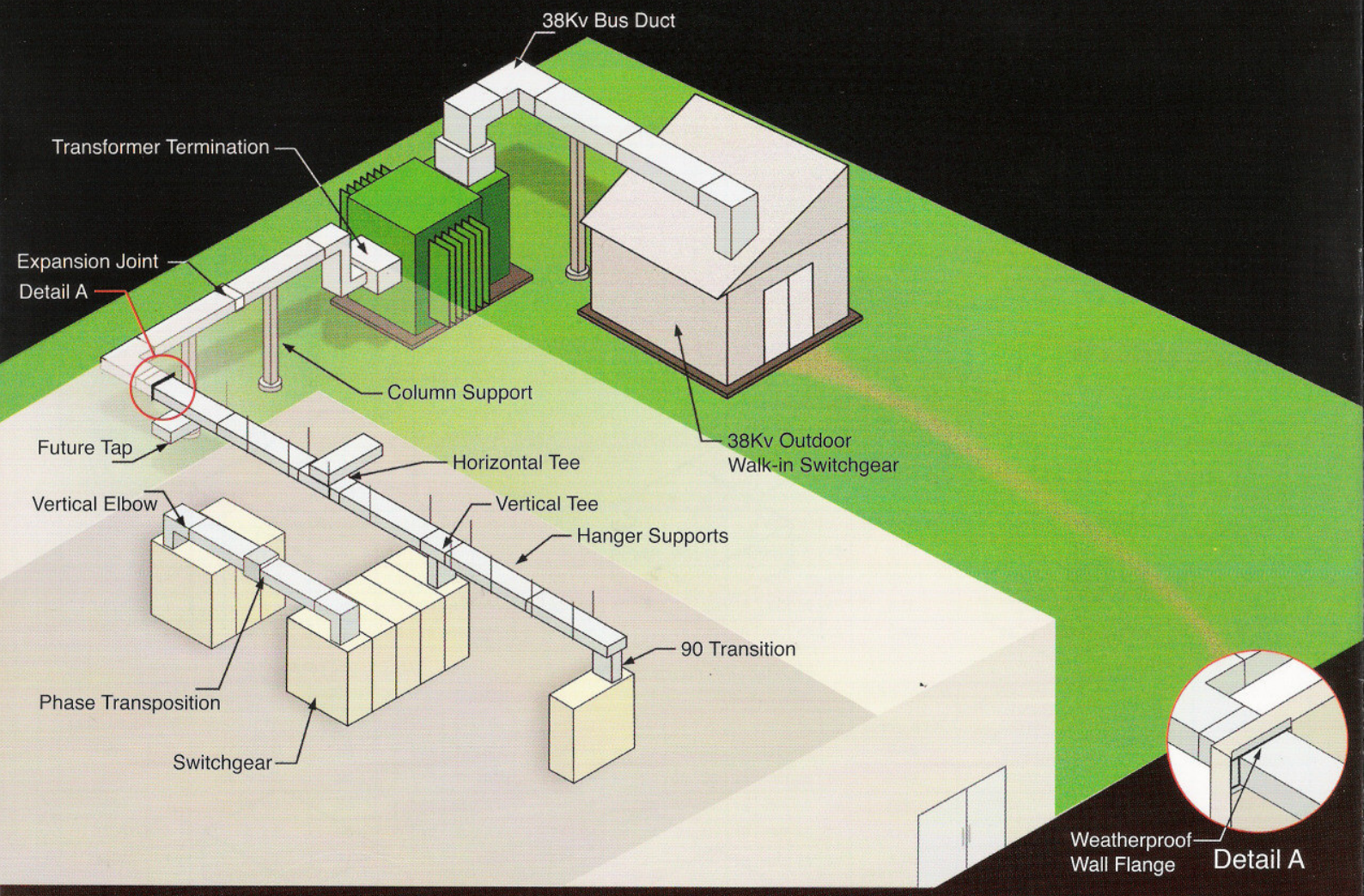

PARK

Established 1945

POWER DISTRIBUTION SYSTEMS

WWW.PARKDETROIT.COM

EMAIL: INFO@PARKDETROIT.COM

1-800-796-PARK

General Offices: 19197 Sherwood Avenue • Detroit, Michigan 48234 • 313/366-2200 • Fax: 313/366-1540