24kV/36kV Metal-Enclosed SF6 Gas Insulated Switchgear

MEIDEN

HICLAD 20GB/HICLAD 30GB



Empower for new days

Compact, reliable, and economic for

Design Concept

This switchgear conforms to IEC62271-200, and all primary components employed therein are in accordance with the relevant IEC standards.
It is designed to accommodate high-performance vacuum circuit-breaker(VCB), which has been designed and tested in accordance with IEC62271-100.
SF_6 gas insulation used in conjunction with VCB has resulted in switchgear setting new standards with respect to;



- **Operation reliability**
- **Reduced maintenance work**
- **Safety for persons**
- **Free from environmental pollution**
- **Reduced dimensions and less space requirements**
- **Current interruption by VCB with zero SF_6 gas pressure** (equal to atmospheric pressure)

medium-voltage applications

Features

Safety

No exposure of high-voltage live part to the air.
Complete interlocking system against erroneous operation.
Equipment of manual operation mechanism in an emergency.

User-friendly

Visualized operation mechanisms equipped with mimic bus and symbols.
All switching devices can be operated from remote.
Compact size achieved by optimal arrangement of devices.

Imperious to environment

High-voltage live part is completely protected against moisture and dust.

Reliability

Reliable gas-insulated busbar system.
Keeping the ability of breaking circuit, even if the insulating gas pressure becomes zero.
Enhancement of reliability by reduction in number of parts achieved by simple structure.

Adaptability

Adaptable for various requirements of network by employing plug-in type voltage transformer and lightning arrester.
Insulating performance is imperious to the installation altitude.
Test of high-voltage part can be fully performed without any gas handling.

Economical Efficiency

Easy maintenance.
No maintenance is needed for high-voltage equipment in the gas compartment.
SF_6 gas is not polluted by arc because of employing VCB.
(SF_6 gas is used only as insulation medium.)

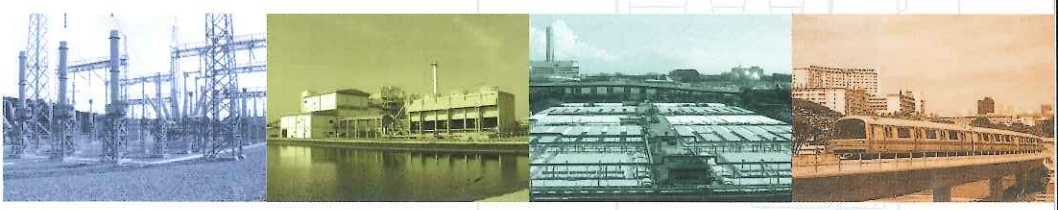

Technical Specification

Technical data

Table 1 Switchgear

Switchgear model		HICLAD 20GB	HICLAD 30GB
Switchgear type		NBG-24	BGB-36
Applicable standards		IEC62271-200	
Clasification of switchgear		SF6-insulated metal-enclosed	
Service condition		● Altitude < 1000m ● Ambient temperature Max. 40℃, Min. -5℃ 24h. average < 35℃ ● Relative humidity 24h.average < 95% 1 month average < 90%	
Rated voltage (kV)		24	36
Rated current (A)		1250, 2000	1250, 2000, 2500
Rated frequency (Hz)		50/60	
Insulation level	1 min power frequency (kV rms)	50	70
	1.2 × 50 μs impulse (kV peak)	125	170
Rated short-time withstand current (kA-s)		25-3	31.5-3
Degree of protection	HV compartment	IP65	
	LV compartment	IP40	
Gas pressure	Rated pressure (MPa)	0.05	0.08
	Alarm pressure (MPa)	0.02	0.06
Operation of 3-position isolator		Motorized / Manual	
Auxiliary voltage	Control circuit (V)	DC 30, 110, 125, 220	
	Motor circuit (V)	AC 220, 230, 240 / DC 110, 125	

Table 2 Vacuum Circuit-Breaker (VCB)

VCB model		NVG-22	VGB-33
Applicable standards		IEC62271-100	
Rated voltage (kV)		24	36
Rated current (A)		1250, 2000	1250, 2000, 2500
Rated frequency (Hz)		50/60	
Insulation level	1 min power frequency (kV rms)	50	70
	1.2 × 50 μs impulse (kV peak)	125	170
Rated short-circuit breaking current (kA)		25	31.5
Rated short-circuit making current (kA peak)		63	82
Rated short-time withstand current (kA-s)		25-3	31.5-3
Operating duty*		O-0.3sec.-CO-3min-CO	
Rated closing time (s)		0.05	
Rated opening time (s)		0.05	
Rated break time (s)		0.07	
Rated TRV for terminal fault	Rate of rise (kV/μs)	0.47	0.57
	TRV peak voltage (kV)	41	62
Type of operating mechanism		Motor charged spring	

* : Other duties, O-0.3sec.-CO-15sec.-CO, O-0.3sec.-CO-1min-CO-1min-CO are also available.

Construction

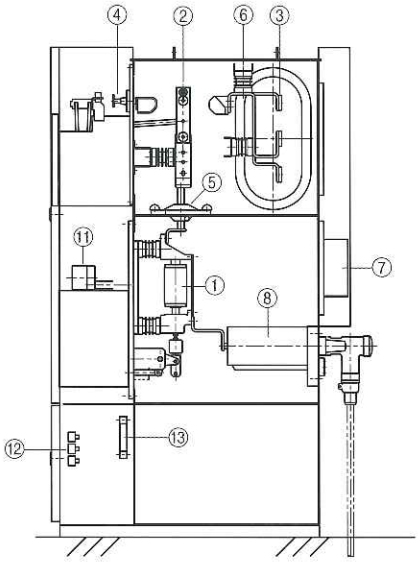

20GB
(Rear Cable Connection Type)

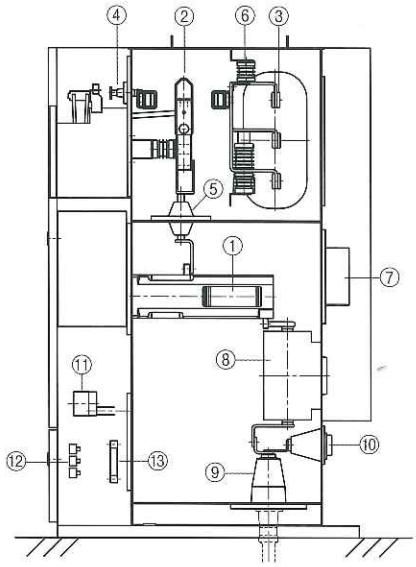

30GB
(Bottom Cable Connection Type)

① Vacuum interrupter
② 3-position isolator
③ Main busbar
④ Earth terminal
⑤ Bushing
⑥ Insulator
⑦ Rupture disc
⑧ Current transformer
⑨ Cable socket
⑩ Testing socket
⑪ Gas density monitor
⑫ Voltage indicator
⑬ Terminal Block

Gas monitoring system

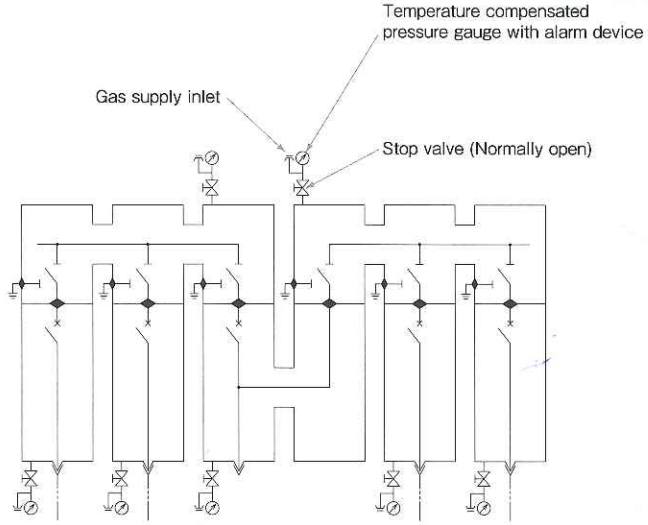

Basic Pattern (Rear Cable Connection Type)

Feeder panel

Single line diagram

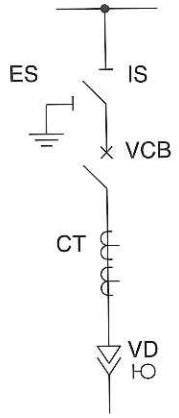

Cross-sectional view

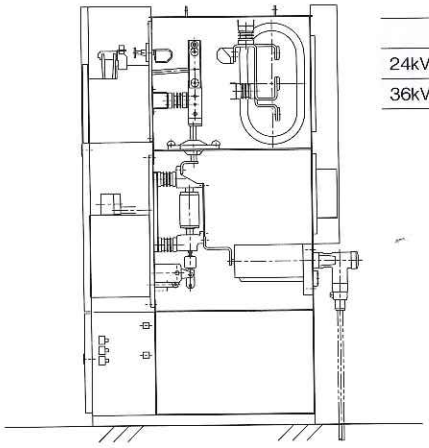

	W	H	D
24kV (1250A)	650	2050	1350
36kV (1250A)	650	2100	1400

Unit : mm

Feeder panel with VT

Single line diagram

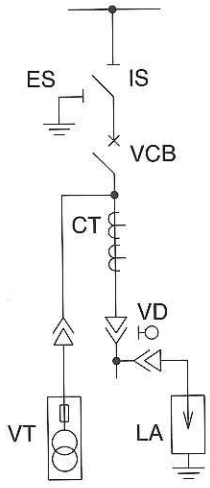

Cross-sectional view

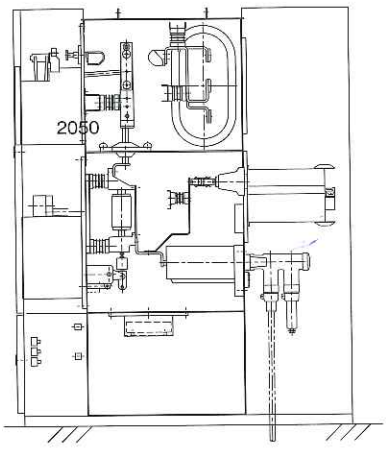

	W	H	D
24kV (1250A)	650	2050	1650
36kV (1250A)	700	2100	1850

Unit : mm

Note: Dimensions and components may be changed according to the specifications.

Bus section panel

Single line diagram

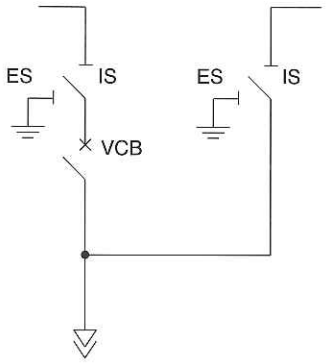

Cross-sectional view

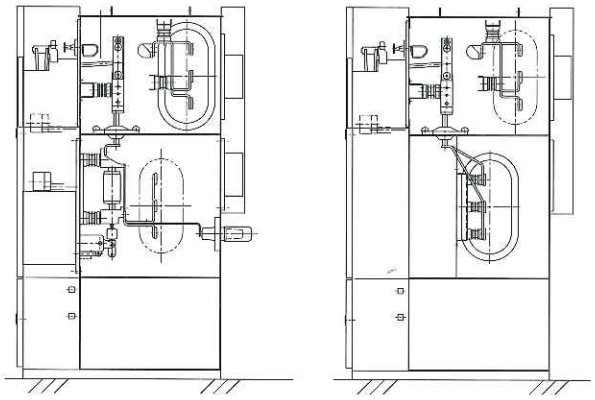

	W	H	D
24kV (1250A)	1300	2050	1350
36kV (1250A)	1300	2100	1400

Unit : mm

Bus section panel with CT & Bus VT

Single line diagram

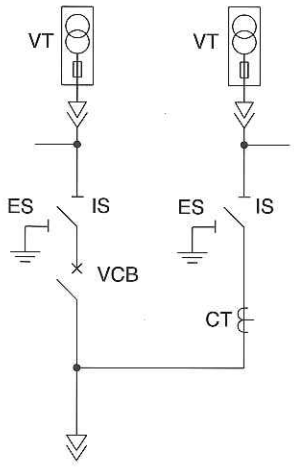

Cross-sectional view

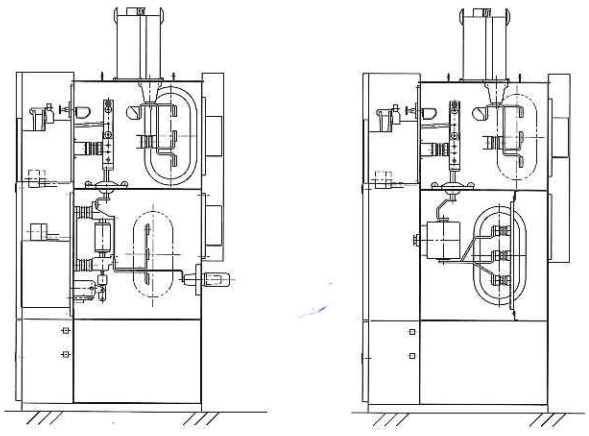

	W	H	D
24kV (1250A)	1300	2450	1350
36kV (1250A)	1300	2700	1400

Unit : mm

Note: Dimensions and components may be changed according to the specifications.

Basic Pattern (Bottom Cable Connection Type)

Feeder panel

Single line diagram

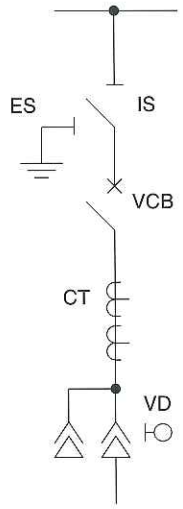

Cross-sectional view

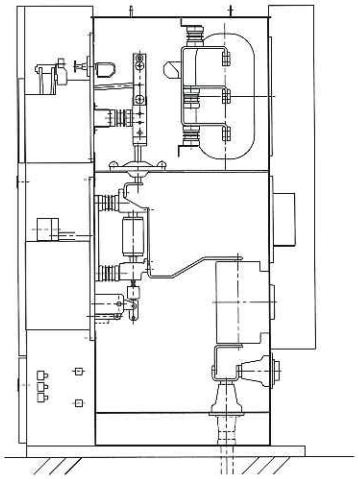

	W	H	D
24kV (1250A)	650	2050	1350
24kV (2000A)	700	2050	1350
36kV (1250A)	650	2100	1350
36kV (2000A)	700	2100	1350
36kV (2500A)	800	2100	1350

Unit : mm

Feeder panel with VT

Single line diagram

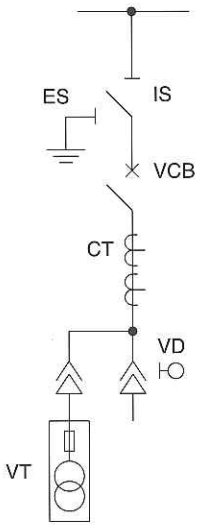

Cross-sectional view

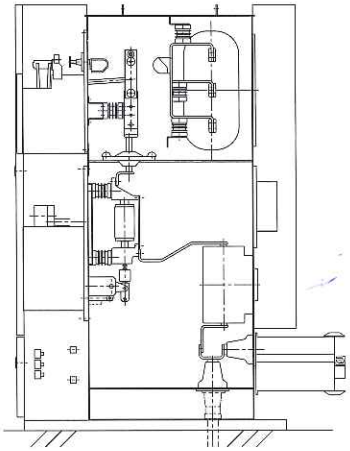

	W	H	D
24kV (1250A)	650	2050	1650
24kV (2000A)	700	2050	1650
36kV (1250A)	650	2100	1850
36kV (2000A)	700	2100	1850
36kV (2500A)	800	2100	1850

Unit : mm

Note: Dimensions and components may be changed according to the specifications.

Bus section panel

Single line diagram

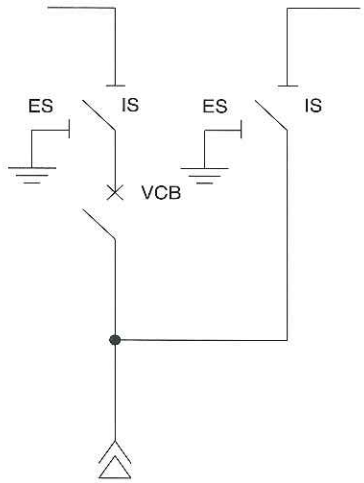

Cross-sectional view

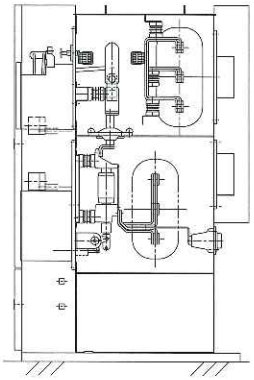

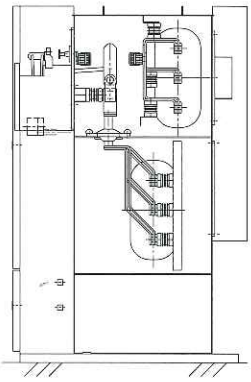

	W	H	D
24kV (1250A)	1300	2050	1350
24kV (2000A)	1400	2050	1350
36kV (1250A)	1300	2100	1350
36kV (2000A)	1400	2100	1350
36kV (2500A)	1600	2100	1350

Unit : mm

Bus section panel with CT & Bus VT

Single line diagram

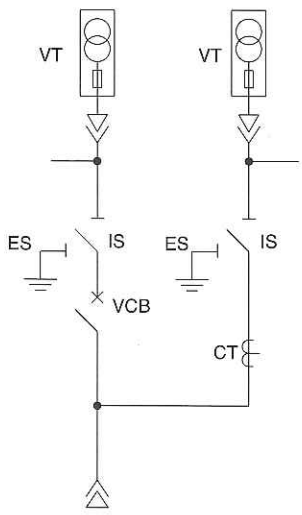

Cross-sectional view

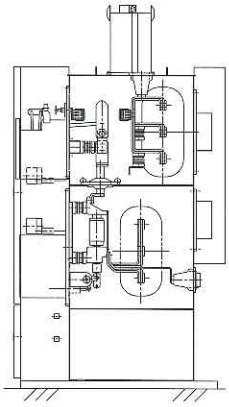

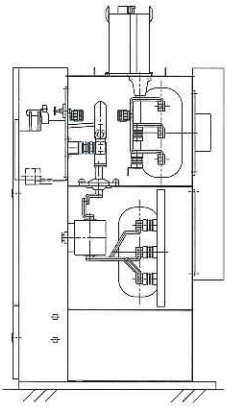

	W	H	D
24kV (1250A)	1300	2450	1350
24kV (2000A)	1400	2450	1350
36kV (1250A)	1300	2700	1350
36kV (2000A)	1400	2700	1350
36kV (2500A)	1600	2700	1350

Unit : mm

Note: Dimensions and components may be changed according to the specifications.

Installation

The individual switchgear, which has been assembled, wired up and tested in factory are delivered to site. Site works for installation require only the setting of the switchgear in the position, connections of inter-panel joints of busbars and cablings of both power and control cables.
The typical maintenance space, dimensions of cable pit and foundation are shown in Fig.2 and Fig.4 respectively.

Fig.1 Single line diagram

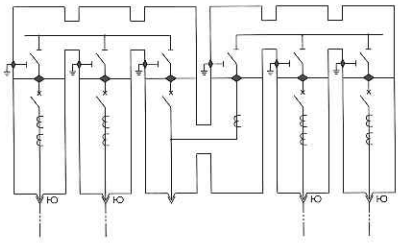

Fig.2 Maintenance Space

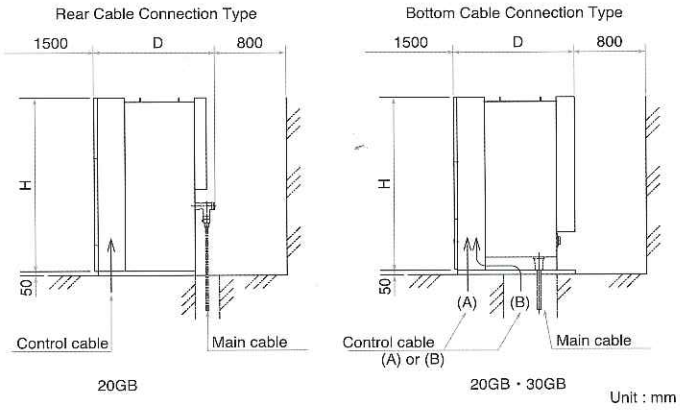

Fig.3 Switchgear Alignment

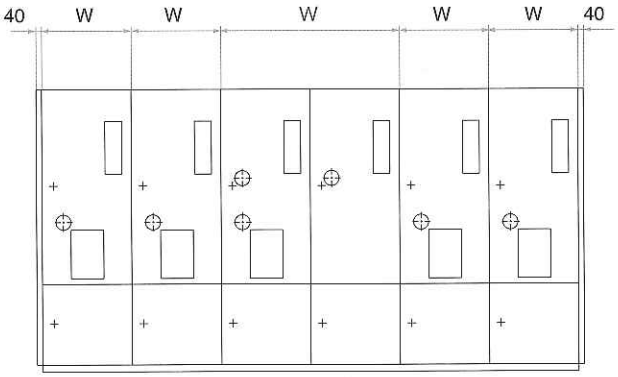

Fig.4 Foundation

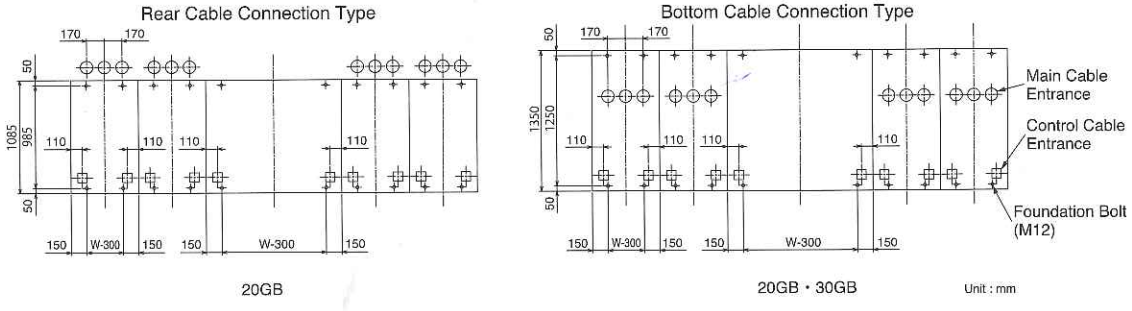

Note: The opening size of cable pit and the location of foundation bolt should be confirmed on each project.

Cable Termination and Testing

HICLAD 20GB/30GB employs high reliable cable termination system, which is of pre-molded plug-in type for various types of 24/36kV power cables.
The cable plug can be equipped with capacitive voltage diverter to connect with the neon voltage indication lamps for continuous voltage monitoring of main circuit. And also it allows phase sequence check by portable phase comparator after connection of cables. In addition, high voltage test plug is available to perform both primary injection test for CTs and high voltage test for cables connected to switchgear.
Typical arrangement of cable termination system and high voltage test plug are shown in Fig.5. The following tools / accessories are optionally available to the cable termination system.

1. High voltage test plug / adapter
   for primary injection test and high voltage test
2. Protection cap
   for protecting withdrawn cable connectors against damage and dirt
3. Blind cap
   for protection against electric-shock hazard
   for live cable connector
4. Dummy plug / Sealing end
   for sealing and voltage-proof closing of plug-in socket
5. Phase comparator
   for phase sequence check
6. 3-phases earthing and short-circuit device / Earthing adapter
   for earthing
   and short-circuit of cable circuit of switchgear

Fig.5 HV Test Plug

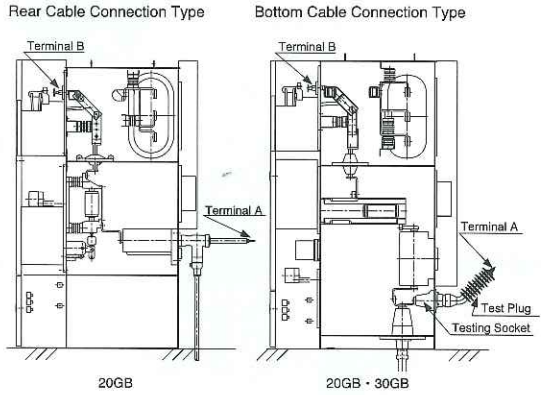

The earthing of main busber and line side shall be performed as shown as in Fig.6.

Fig.6 Earthing

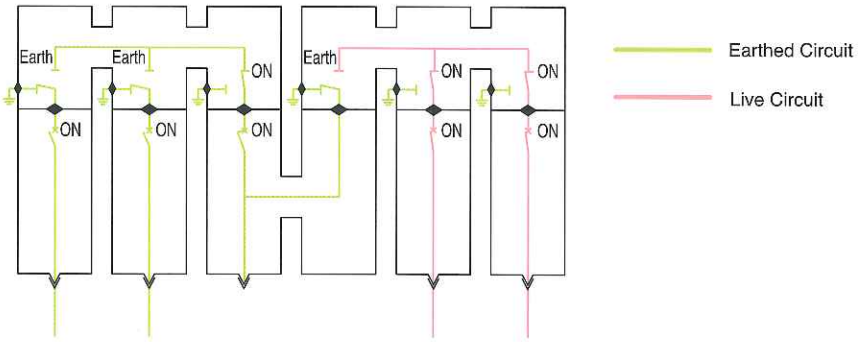

Ancillary Equipment

HICLAD 20GB/30GB provides the following ancillary equipment.

1. Mechanical indicators

a. Operating counter of circuit breaker
b. Spring, "Charged-Discharged"
C. Circuit breaker "ON"
d. Circuit breaker "OFF"
e. 3-position isolator "ON"
f. 3-position isolator "OFF"
g. 3-position isolator "Ready to Earth"

2. Padlocking facilities (Option)

a. Front door of LV compartment
b. Manual "ON" and "OFF" push button switches of circuit breaker
c. Inlet for manual operating handle of 3-position isolator

● All product and company names mentioned in this paper are the trademarks and/ or service marks of their respective owners.

MEIDEN



MEIDENSHA CORPORATION

ThinkPark Tower, 2-1-1, Osaki, Shinagawa-ku, Tokyo, 141-6029 Japan
International Sales Division
Phone:81-3-6420-7510 Facsimile:81-3-5745-3053

www.meidensha.co.jp

Overseas Offices & Group Companies

China

DONGGUAN MEIDEN PACIFIC ELECTRICAL ENGINEERING CO., LTD.
No.1 Side Street 1 of DongFu Commercial Street, MoWu, WanJiang District, Dongguan City, GuangDong Province, P.C.523041 P.R.China
Phone: 86-769-22285210 Facsimile: 86-769-22285250

MEIDEN ZHENGZHOU ELECTRIC CO., LTD.
No.87 Hehuan Street, Zhengzhou Hi-Tech Industries Development Zone, Zhengzhou, Henan Province, P.C.450001, P.R.China
Phone: 86-371-67848800 Facsimile: 86-371-67848797

MEIDEN SHANGHAI CO., LTD.
Room 1806, Plaza 336, No. 336 Xizang Road (Middle) Huangpu-District,Shanghai, 200001, P.R. China
Phone: 86-21-63860358 Facsimile: 86-21-63860058

MEIDEN HANGZHOU DRIVE SYSTEMS CO., LTD.
No.168, Hongxing Road, Qiaonan District, Xiaoshan Economic & Technological Development Zone, Hangzhou, Zhejiang, P.C. 311231, P.R.China
Phone: 86-571-8369-6808 Facsimile: 86-571-8369-6818

SHANGHAI MEIDENSHA CHANGCHENG SWITCHGEAR CO., LTD.
No.885, Xingrong RD Industrial Zone, Jiading, Shanghai 201821, China
Phone: 86-21-6916-9911 Facsimile: 86-21-6916-9922

Hong Kong

MEIDEN PACIFIC (CHINA) LTD.
Unit 01-02A, 16/F, Tower 1, Ever Gain Plaza, 88 Container Port Road, Kwai Chung, N.T., Hong Kong
Phone: 852-2503-2468 Facsimile: 852-2887-8046

India

MEIDEN INDIA PVT. LTD.
910, International Trade Tower, Nehru Place, New Delhi-110019, India
Phone: 91-11-46539381 Facsimile: 91-11-46539385

Indonesia

P.T. MEIDEN ENGINEERING INDONESIA
20th Floor, Summitmas I, Jl. Jenderal Sudirman Kaveling 61-62
P.O.BOX 6920/KBY/Summitmas I Jakarta Selatan 12190, Indonesia
Phone: 62-21-520-0612 Facsimile: 62-21-520-0240

Korea

MEIDEN KOREA CO., LTD.
1404 DongHwa Bldg., 71, Yeouinaru-ro, Yeongdeungpo-gu, SEOUL 150-708 Rep. of KOREA
Phone: 82-2-736-0232~3 Facsimile: 82-2-736-0234

Malaysia

MEIDEN MALAYSIA SDN. BHD.
Unit A-13-13A, Level 13, Menara UOA Bangsar 5, Jalan Bangsar Utama 1, 59000 Kuala Lumpur, Malaysia
Phone: 60-3-22878188 Facsimile: 60-3-22879188

MEIDEN METAL ENGINEERING SDN. BHD.
Lot 6, Peringkat 3, Kawasan Perindustrain Alor Gajah, 78000 Melaka, Malaysia
Phone: 60-6-556-8790 Facsimile: 60-6-556-8795

Singapore

MEIDEN ASIA PTE. LTD.
5, Jalan Pesawat, Jurong Industrial Estate, Singapore 619363
Phone: 65-6268-8222 Facsimile: 65-6264-4292

MEIDEN SINGAPORE PTE. LTD.
5, Jalan Pesawat, Jurong Industrial Estate, Singapore 619363
Phone: 65-6268-8222 Facsimile: 65-6264-4292

Thailand

THAI MEIDENSHA CO., LTD.
15th Floor, Rasa Tower II, 555 Phaholyothin Road, Chatuchak, Chatuchak, Bangkok 10900, Thailand
Phone: 66-2792-4200 Facsimile: 66-2792-4299

MEIDEN ELECTRIC (THAILAND) LTD.
898 Moo 2, Bangpa-in Industrial Estate, Udomsorayuth Rd., Klongjig, Bangpa-in, Ayudhaya 13160, Thailand
Phone: 66-35-258258~262 Facsimile: 66-35-221388

United Arab Emirates

MEIDENSHA CORPORATION DUBAI BRANCH
Dubai Airport Free Zone, 6WA Room No.606, P.O.Box 54919, Dibai, U.A.E
Phone: 971-4-2146-692 Facsimile: 971-4-2146-699

The United Kingdom

MEIDEN EUROPE LTD.
NYK Complex, Bradbourne Drive, Tilbrook, Milton Keynes MK7 8BN, England, U.K.
Phone: 44-1908-276000 Facsimile: 44-1908-276010

The United States

MEIDEN AMERICA, INC.
15800 Centennial Drive, Northville Township, MI 48168, U.S.A.
Phone: 1-734-656-1400 Facsimile: 1-734-459-1863

MEIDEN TECHNICAL CENTER NORTH AMERICA LLC
15800 Centennial Drive, Northville Township, MI 48168, U.S.A.
Phone: 1-734-656-1400 Facsimile: 1-734-459-1863

Specifications in this catalog are subject to change without notice.

FA69-3218 As of Jan., 2013
2013-1ME0.5L