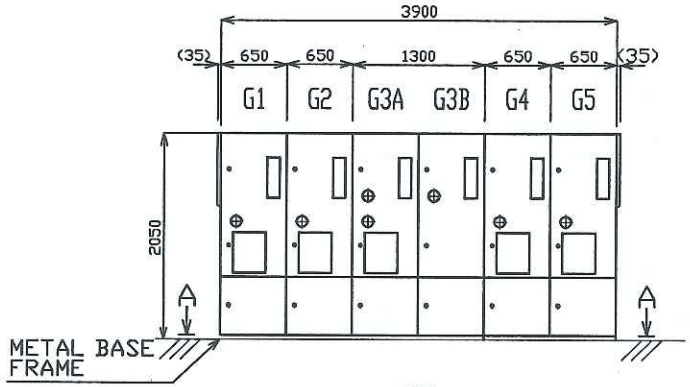

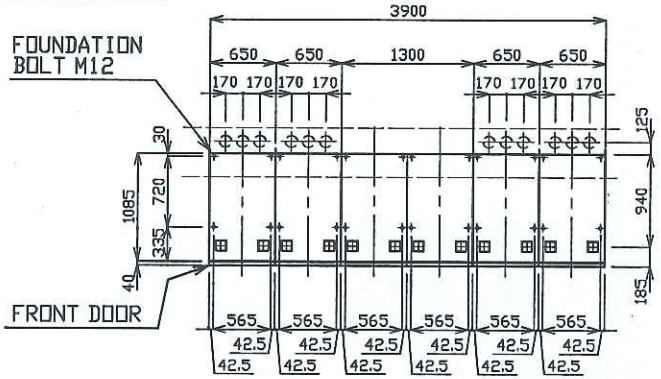

FOUNDATION DRAWING
A-A VIEW

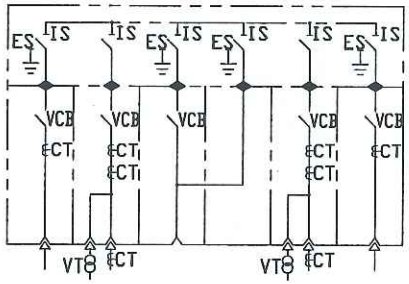

SINGLE LINE DIAGRAM

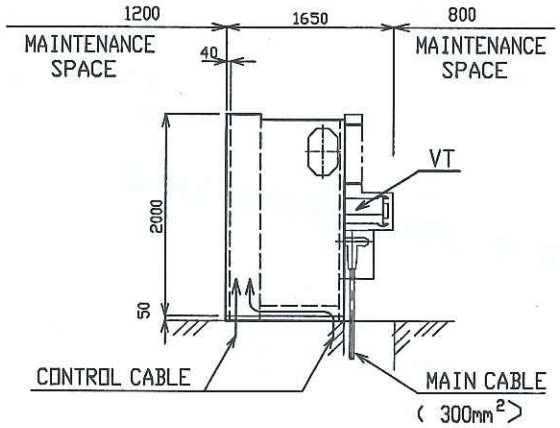

FLOOR LEVEL ALLOWANCE SHOULD BE LESS THAN 1.0mm PER 1.0m

SINGLE LINE DIAGRAM		GA35508-1	
FRONT DOOR COMPONENTS LAYOUT DRAWING		GA35508-6	
PANEL NO.	PANEL NAME	ASSEMBLY DRAWING	MASS (Kg)
G 1	TRANSFORMER NO.1	GA35508-4	1150
G 2	SPPG INCOMING NO.1	GA35508-3	1250
G3A	BUS-SECTION	GA35508-5	1250
G3B	BUS-RISER	GA35508-5	1250
G 4	SPPG INCOMING NO.2	GA35508-3	1250
G 5	TRANSFORMER NO.2	GA35508-4	1150

FOR REFERENCE ONLY

MARK	DESCRIPTIONS	DRAWN	DATE
	REVISION		

APPROVED BY	CHECKED BY	DESIGNED BY	TITLE
K. MATSUBARA	ALFRED	ERIC	< HICLAD-20GB > 22kV SWITCHGEAR FOR GLOBAL DITRIBUTION CENTRE @ PIONEER TURN SUB-STATION LAYOUT & FOUNDATION DRAWING
	UNIT : mm	SCALE : 1:50	
MEIDEN SINGAPORE PTE. LTD.		JOB NO. EF140537	DRAWING NO. GA35508-2

REMARK

MEIDEN/SWG DIV/ERIC -26-Aug-14 8:56 A:GA35508-2.dwg

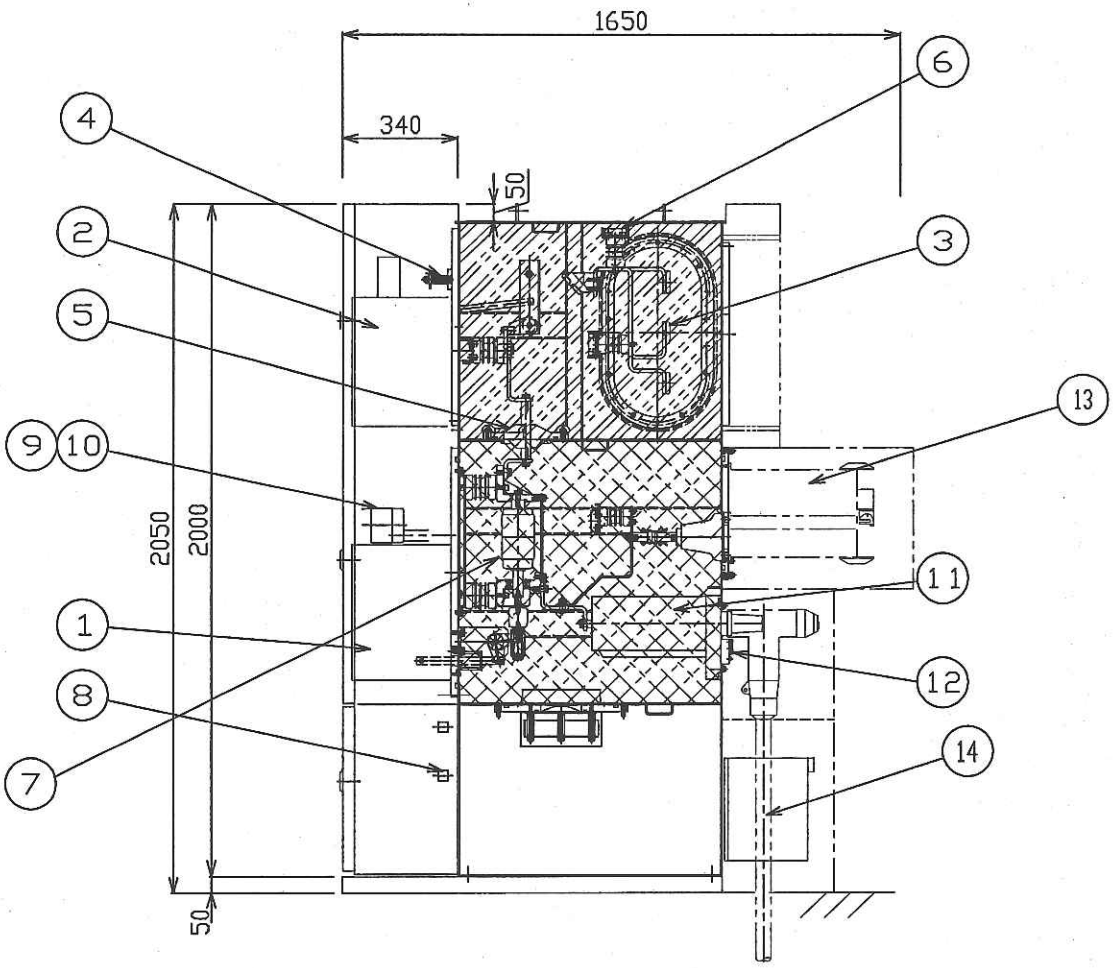

No.	NAME	Q'TY	RATING
1	VACUUM CIRCUIT BREAKER	1	24kV 1250A
2	2-POSITION ISOLATOR	1	24kV 1250A
3	MAIN BUSBAR	1	1250A
4	EARTH BUSBAR	1	
5	BUSHING	1	
6	INSULATOR	1set	
7	VACUUM INTERRUPTER	1	
8	TERMINAL BLOCK	1set	
9	DENSITY MONITOR	1	
10	REFILLING VALVE	1	
11	CURRENT TRANSFORMER	3	500/5A 15VA, 5P20 500/5A CL. X
12	VOLTAGE DETECTOR	3	
13	VT WITH PRIMARY FUSE	3	22KV/√3: 110V/√3 100VA CL. 1.0
14	CURRENT TRANSFORMER(RCT)	2	(TBA) 15VA, CL. 0.5

		RATED PRESSURE
▨	BUSBAR COMPARTMENT	0.5 kgf/cm^2
▩	VCB COMPARTMENT	0.5 kgf/cm^2

FOR REFERENCE ONLY

MARK	DESCRIPTIONS	DRAWN	DATE
△			
△			
△			
△			

REVISION

APPROVED BY	CHECKED BY	DESIGNED BY	TITLE
K. MATSUBARA	ALFRED	ERIC	< HICLAD-20GB >
	UNIT : mm	SCALE : 1:15	22kV GAS-INSULATED SWITCHGEAR FOR GLOBAL DITRIBUTION CENTRE @ PIONEER TURN ASSEMBLY DRAWING - SPPG INCOMING PANEL

MEIDEN SINGAPORE PTE. LTD.	JOB NO.	DRAWING NO.	REMARK
	EF140537	GA35508-3	△

MEIDEN/SWG DW/ERIC -25-Aug-14 3:53 PM GA35508-3.dwg

MEIDEN

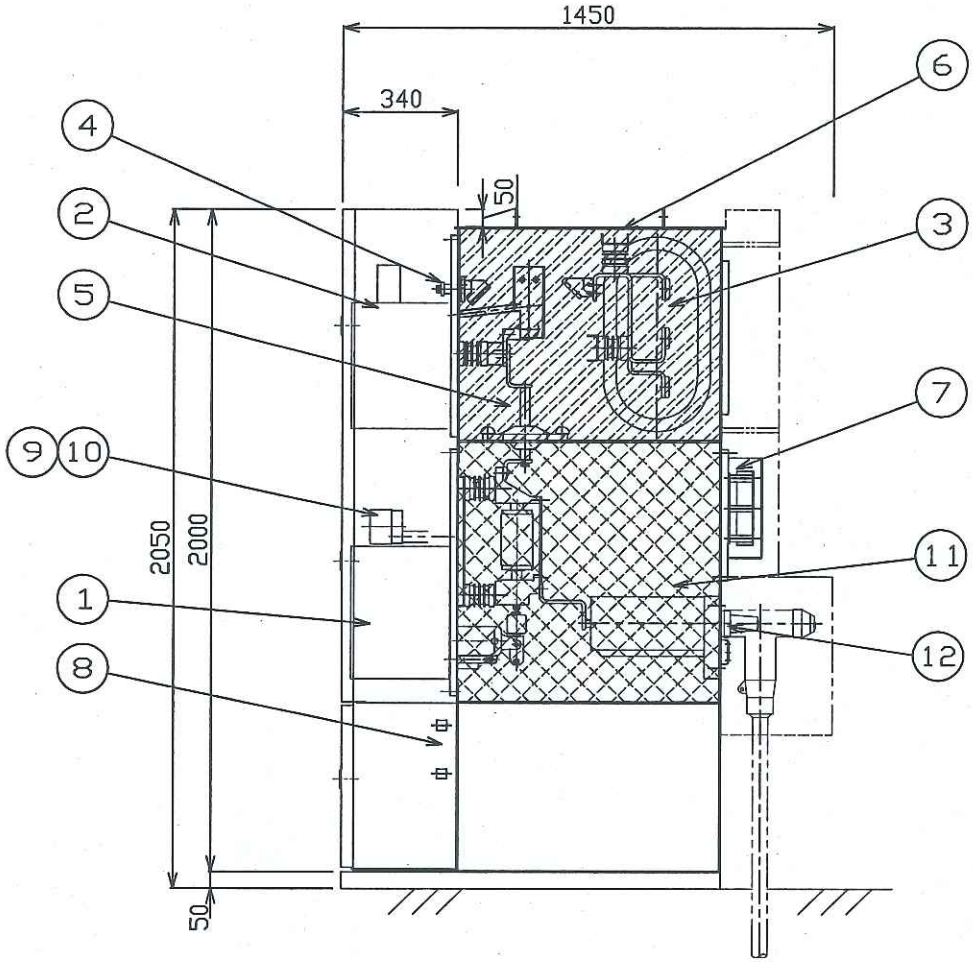

No.	NAME	Q'TY	RATING
1	VACUUM CIRCUIT BREAKER	1	24kV 1250A
2	3-POSITION ISOLATOR	1	24kV 1250A
3	MAIN BUSBAR	1	1250A
4	EARTH BUSBAR	1	
5	BUSHING	1	
6	INSULATOR	1set	
7	RUPTURE DISK	1	
8	TERMINAL BLOCK	1set	
9	DENSITY MONITOR	1	
10	REFILLING VALVE	1	
11	CURRENT TRANSFORMER	3	75/1A CL. X
12	VOLTAGE DETECTOR	3	

		RATED PRESSURE
	BUSBAR COMPARTMENT	0.5 kgf/cm²
	VCB COMPARTMENT	0.5 kgf/cm²

FOR REFERENCE ONLY

MARK	DESCRIPTIONS	DRAWN	DATE
△			
△			
△			
△			

REVISION

APPROVED BY	CHECKED BY	DESIGNED BY	TITLE
K. MATSUBARA	ALFRED	ERIC	< HICLAD-20GB > 22kV GAS-INSULATED SWITCHGEAR FOR GLOBAL DITRIBUTION CENTRE @ PIONEER TURN ASSEMBLY DRAWING - TRANSFORMER PANEL
	UNIT : mm	SCALE : 1:15	

MEIDEN SINGAPORE PTE. LTD.	JOB NO.	DRAWING NO.	REMARK
	EF140537	GA35508-4	△

MEIDEN/SWG DW/ERIC -25-Aug-14 3:19 PMGA35508-4.dwg

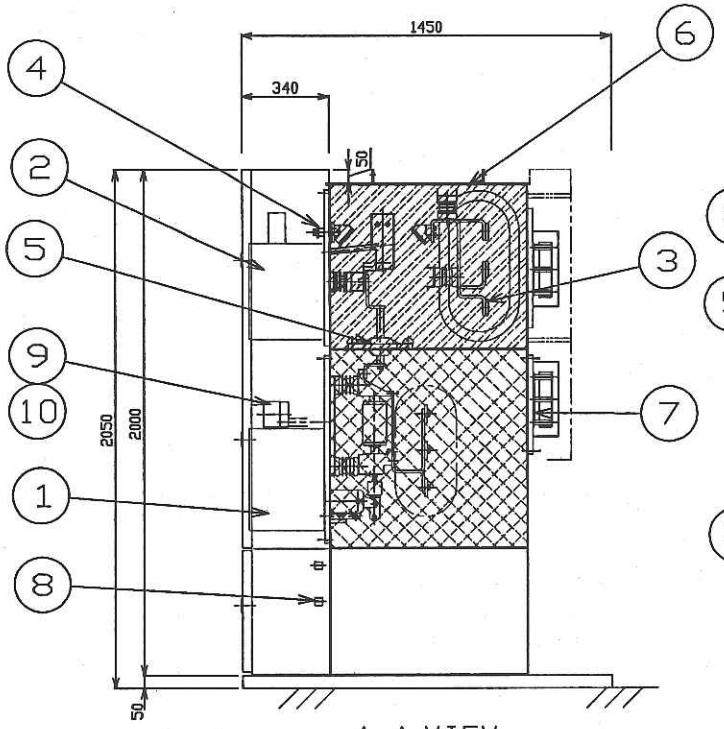

A-A VIEW

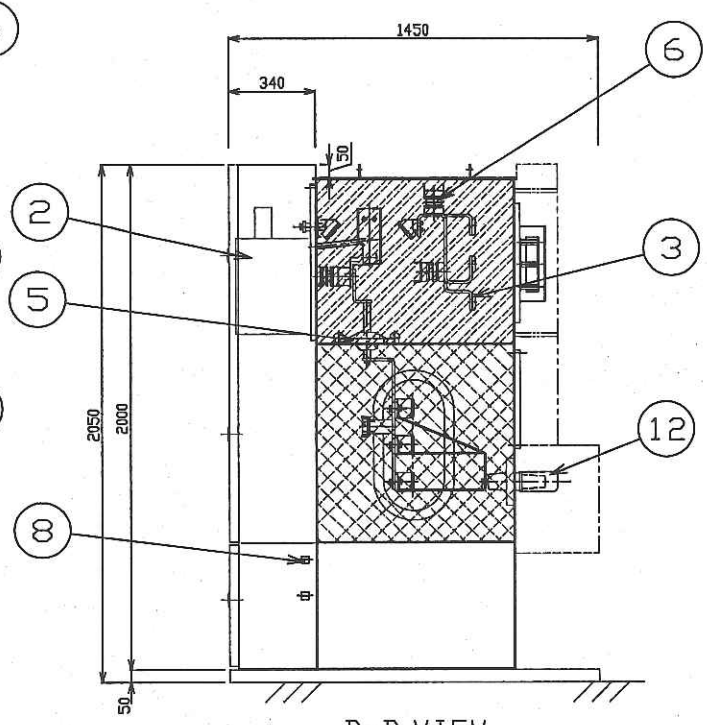

B-B VIEW

No.	NAME	Q'TY	RATING
1	VACUUM CIRCUIT BREAKER	1	24kV 1250A
2	3-POSITION ISOLATOR	1	24kV 1250A
3	MAIN BUSBAR	1	1250A
4	EARTH BUSBAR	1	
5	BUSHING	1	
6	INSULATOR	1set	
7	RUPTURE DISK	1	
8	TERMINAL BLOCK	1set	
9	DENSITY MONITOR	3	
10	REFILLING VALVE	3	
11	———		
12	DEAD-END RECEPTABLE	3	

	RATED PRESSURE
BUSBAR COMPARTMENT	0.5 kgf/cm²
VCB COMPARTMENT	0.5 kgf/cm²

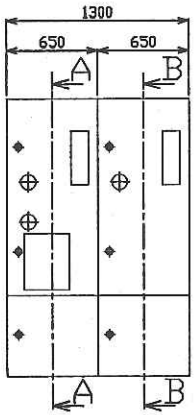

FRONT PANEL

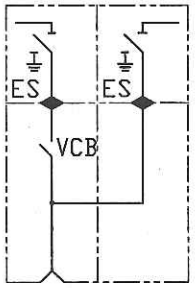

SINGLE LINE DIAGRAM

FOR REFERENCE ONLY

MARK	DESCRIPTIONS	DRAWN	DATE
△			
△			
△			
△			

REVISION

APPROVED BY	CHECKED BY	DESIGNED BY	TITLE
K. MATSUBARA	ALFRED	ERIC	< HICLAD-20GB > 22kV GAS-INSULATED SWITCHGEAR FOR GLOBAL DITRIBUTION CENTRE @ PIONEER TURN ASSEMBLY DRAWING - BUS-SECTION/RISER PANEL
	UNIT : mm	SCALE : 1:20	
MEIDEN SINGAPORE PTE. LTD.		JOB NO. EF140537	DRAWING NO. GA35508-5

REMARK △

MEIDEN/SWG DIV/ERIC -25-Aug-14 11:27 AMGA35508-5.dwg

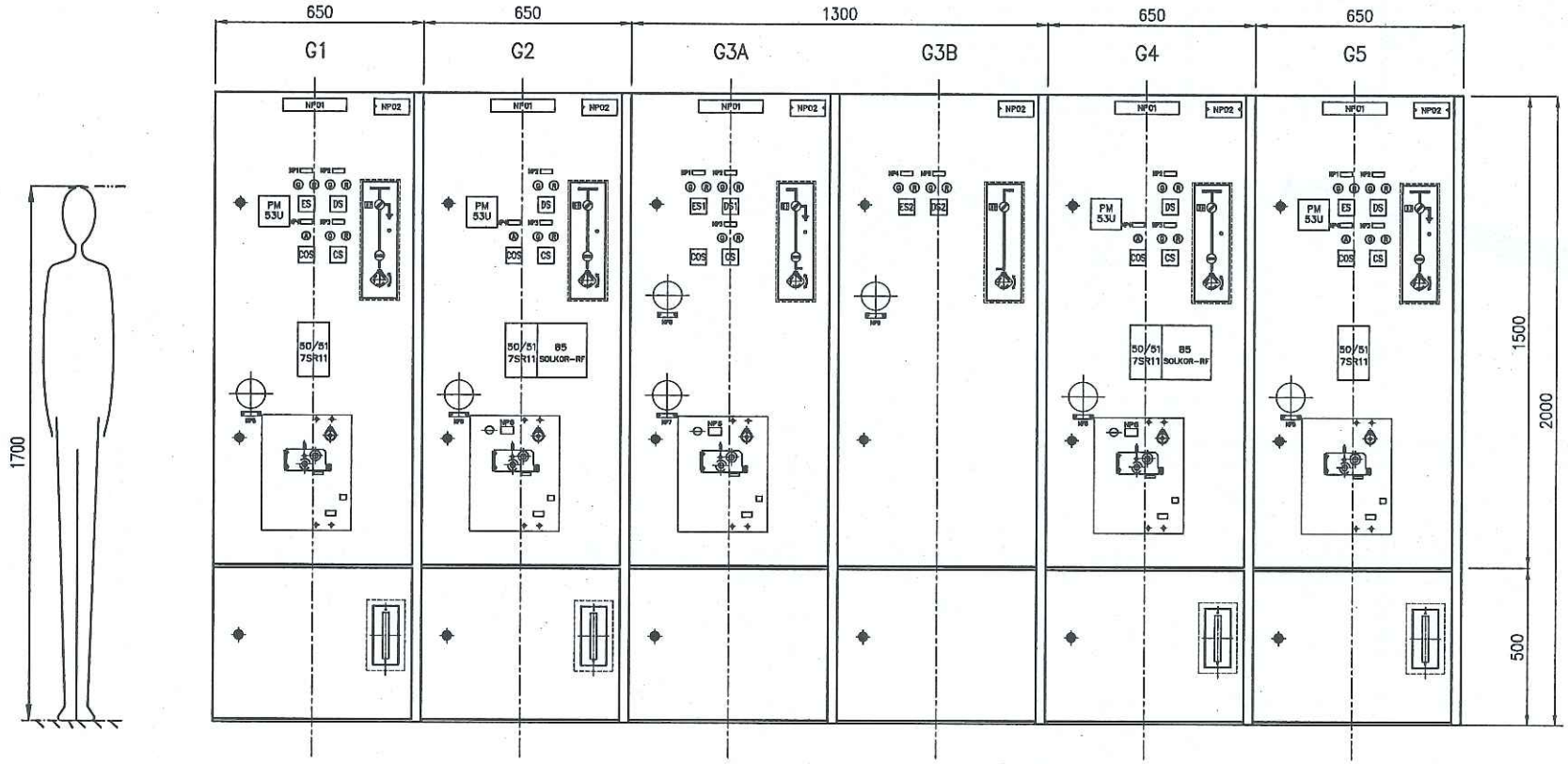

PANEL LABELING TABLE

PANEL CODE	DESCRIPTION
G1	TRANSFORMER NO. 1
G2	SPPG INCOMING NO. 1
G3A	BUS SECTION
G3B	BUS RISER
G4	SPPG INCOMING NO. 2
G5	TRANSFORMER NO. 2

TRANSFORMER PANEL

NP01 : REFER TO PANEL LABELLING TABLE
NP02 : MEIDEN LOGO
NP1 : ES
NP2 : IS
NP3 : CB
NP4 : COMMON RESET
NP5 : VCB COMPARTMENT
PANEL: G1 & G5

INCOMING PANEL

NP01 : REFER TO PANEL LABELLING TABLE
NP02 : MEIDEN LOGO
NP2 : IS
NP3 : CB
NP4 : COMMOM RESET
NP5 : VCB COMPARTMENT
NP6 MECHANICAL INTERLOCK PRESS TO RELEASE
PANEL: G2 & G4

BUS SECTION PANEL

NP01 : REFER TO PANEL LABELLING TABLE
NP01 : MEIDEN LOGO
NP1 : ES1
NP2 : IS1
NP3 : VCB
NP4 : ES2
NP5 : IS2
NP6 : MECHANICAL INTERLOCK PRESS TO RELEASE
NP7 : VCB COMPARTMENT
NP8 : BUSBAR-L COMPARTMENT
NP9 : BUSBAR-R COMPARTMENT
PANEL: G3A & G3B

NOTE:
TRANSFORMER FAULT INDICATION ARE SHOWN IN THE PROTECTION RELAY LED.

FOR REFERENCE ONLY

△			
△			
△			
△			
MARK	DESCRIPTIONS	DRAWN	DATE
REVISION			

ES(1,2)	EARTH SWITCH (1,2)
DS(1,2)	DISCONNECTOR SWITCH (1,2)
CS	CIRCUIT BREAKER SWITCH
COS	LOCAL/REMOTE SWITCH

APPROVED BY	CHECKED BY	DESIGNED BY	TITLE
K. MATSUBARA	ALFRED	ERIC	< HICLAD-20GB > 22kV GAS-INSULATED SWITCHGEAR FOR GLOBAL DITRIBUTION CENTRE @ PIONEER TURN FRONT DOOR PARTS LAYOUT
	UNIT : mm	SCALE : 1:15	
MEIDEN SINGAPORE PTE. LTD.	JOB NO. EF140537	DRAWING NO. GA35508-6	REMARK △

MEIDEN/SWG DIV/ERIC -25-Aug-14 5:01 PMGA35508-6.dwg

MEIDEN

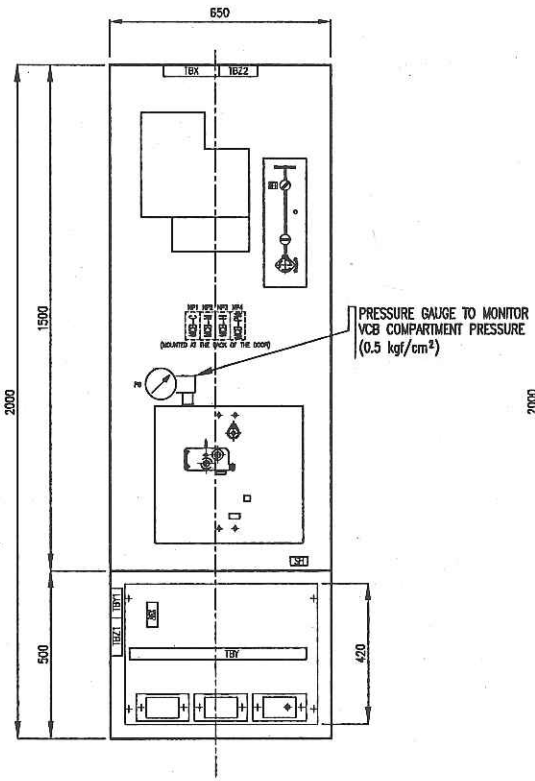

INCOMING PANEL

NP1 : CONTROL
NP2 : MOTOR
NP3 : SPACE HEATER
NP4 : POWER METER

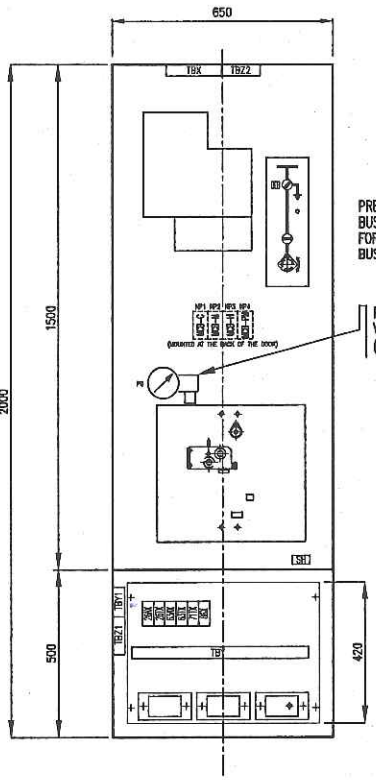

TRANSFORMER PANEL

NP1 : CONTROL
NP2 : MOTOR
NP3 : SPACE HEATER
NP4 : POWER METER

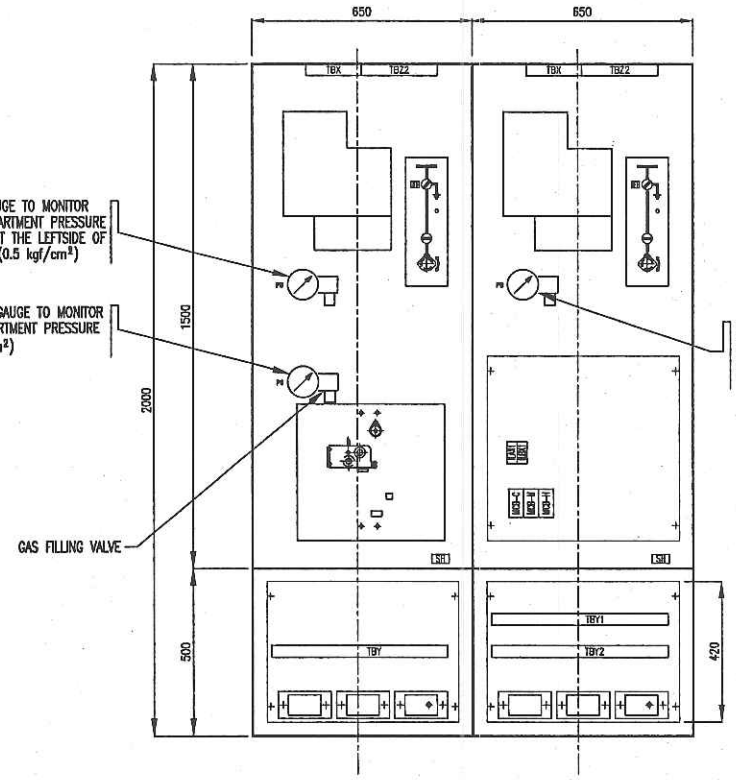

BUS SECTION PANEL C/W BUSBAR SF6 GAS PRESSURE MONITORING

NP1 : CONTROL
NP2 : MOTOR
NP3 : SPACE HEATER

FOR REFERENCE ONLY

MARK	DESCRIPTIONS	DRAWN	DATE
△			
△			
△			
△			

REVISION

APPROVED BY	CHECKED BY	DESIGNED BY	TITLE
K. MATSUBARA	ALFRED	ERIC	< HICLAD-20GB > 22kV GAS-INSULATED SWITCHGEAR FOR GLOBAL DITRIBUTION CENTRE @ PIONEER TURN PARTS LAYOUT FOR AUXILIARY COMPARTMENT
	UNIT : mm	SCALE : 1:15	

MEIDEN SINGAPORE PTE. LTD.	JOB NO.	DRAWING NO.	REMARK
	EF140537	GA35508-7	△

MEIDEN/SNG DW/ERIC -26-Aug-14 8:55 AM GA35508-7.dwg