Industrial Solutions

WORLDWIDE PARTNER

WavePro LT Busway

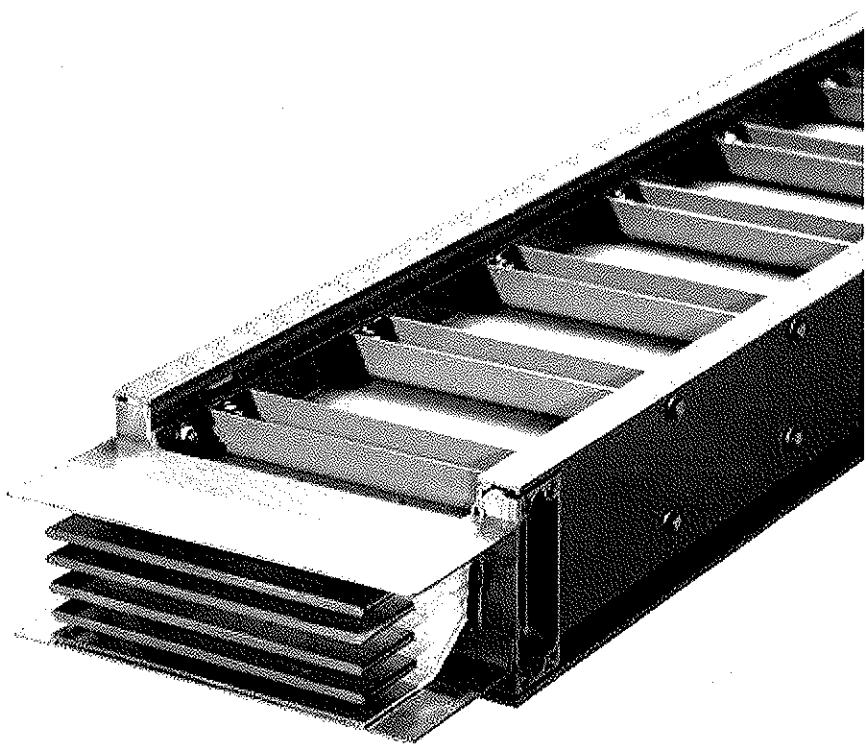

GE imagination at work

About GE

GE (NYSE: GE) works on things that matter. The best people and the best technologies taking on the toughest challenges. Finding solutions in energy, health and home, transportation and finance. Building, powering, moving and curing the world. Not just imagining. Doing. GE works. For more information, visit the company's website at www.ge.com.

Industrial Solutions

Industrial Solutions, a GE heritage business, is leading the future of electrification with advanced technologies that protect and control the distribution of electricity throughout a facility's infrastructure. We provide customers, across various industries, with end-to-end product and service solutions that ensure the reliability and protection of the electrical infrastructure; from the substation, to a facility's critical equipment, and all the power technologies in between.

Find more information on www.geindustrial.com

Honour

FORTUNE WORLD'S MOST ADMIRED COMPANIES 2013
Industry Champion – Ranked #1
2013 World's Most Admired Companies

Interbrand Creating and managing brand value™
2012 Best Global Brand

FINANCIAL TIMES
2010 World's Most Respected Companies

BusinessWeek
2010 World's Most Innovative Companies

BARRON'S
《BARRON'S》
2012 World's Most Respected Companies

WavePro LT Busway

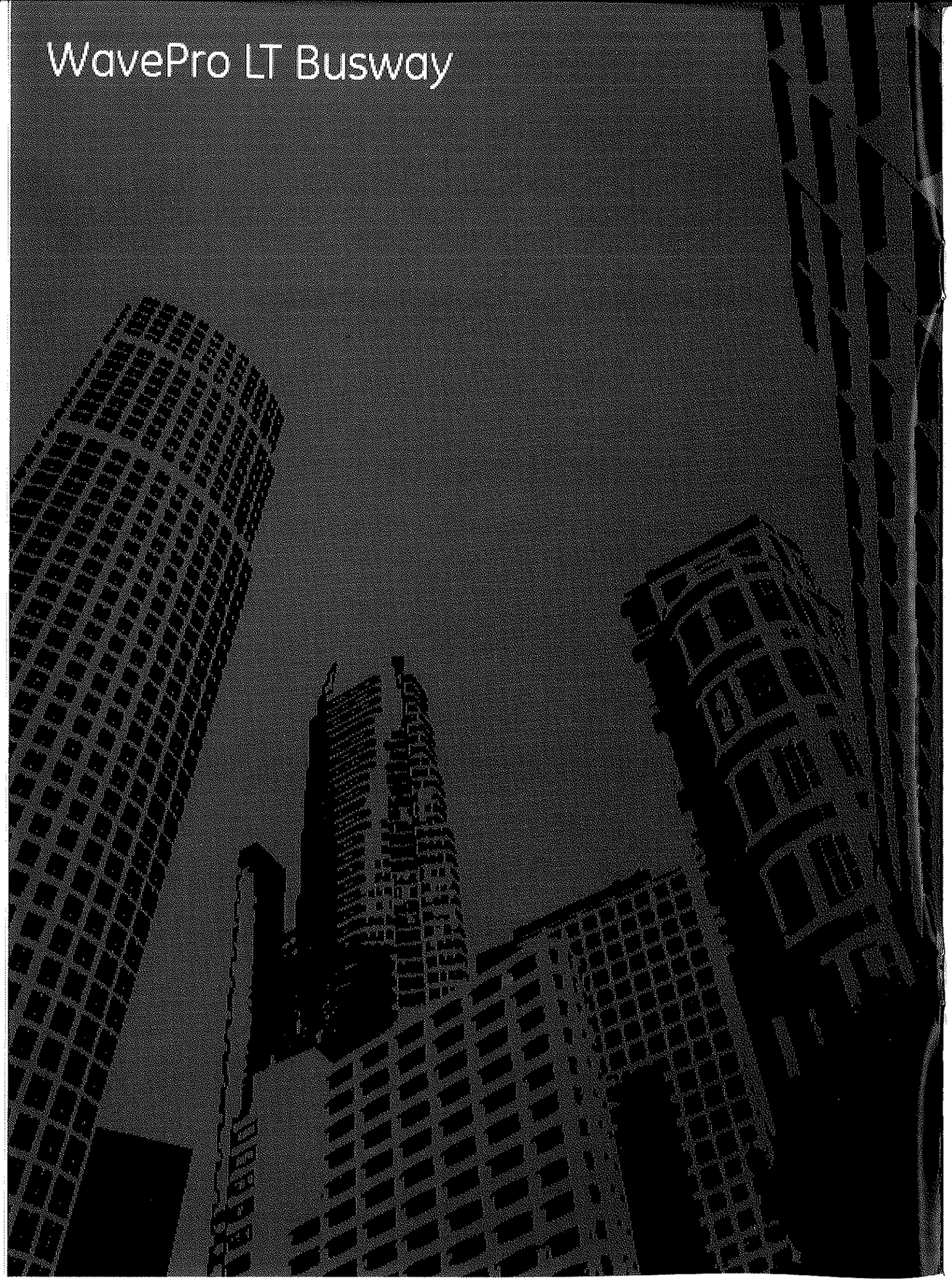

Contents

General Introduction

- GE
- GE Industrial Solutions

WavePro LT Busway

- Product Overview ····· 02
- WavePro LT Busway Introduction ····· 04
- Features of WavePro LT Busway ····· 06
- Busway versus Cable ····· 08
- Electrical Data ····· 10
- Physical Data ····· 12
- Accessories ····· 28
- Installation ····· 30

Ordering Information ····· 32

Busway Phase Sequence and Color ····· 33

WavePro LT Catalogues ····· 34

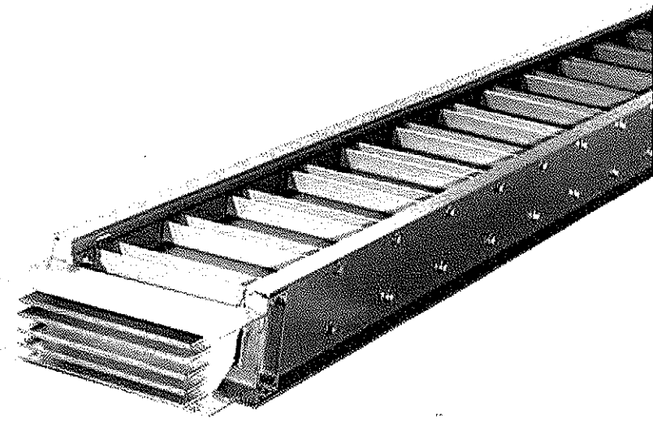

Product Overview

With the booming of the U.S. automobile industry in the last century, the world's earliest busway products born in the 1940s, which is the first generation of busway products developed by General Electric Company - steel housing LVD busway.

In 1989, GE developed an innovative new product - Spectra Series Busway, which became a milestone in busway history and the creator of a new industry standard. It was the first time aluminum housing and epoxy insulating material had been used in busway design.

GE low voltage busway have complete product lines, including power busway, lighting busway etc. GE busway system complies with UL, NEMA and IEC standards.

All four global R&D centers co-operate in global technolgy and process for the busway system development to maintain a leading position in industry.

Spectra Series™

GE Spectra Series™ is a high performance, sandwich type busway product line featuring GE's unique Blue Coat epoxy insulation which provides the industries longest insulation life of more than 50 years. GE Spectra Series™ uses a lightweight Aluminum housing that is optimized for effective heat dissipation. New Joint Guard Protection System dynamically indicates proper joint tension through color for easy installation and maintenance. The product is leading in US and South-east Asia market.

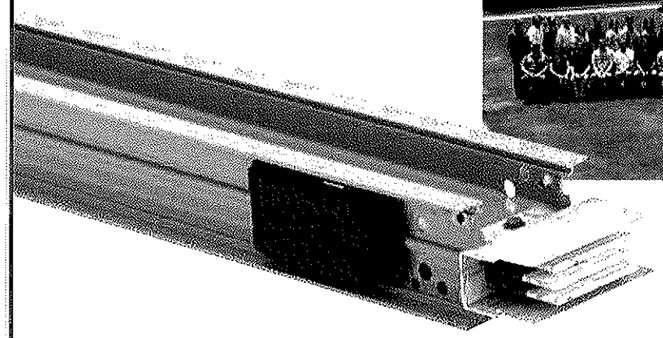



• Spectra Series Busway Manufacturing center in Selmer, USA

WavePro LT busway

The WavePro LT busway launched by GE to complement it's range of foire proof and epoxy busway. Using the latest design, it has superior performance. Rated working voltage up to 415V, rated insulation voltage up to 690V, and rated working current 100-5000A.

With low magnetic material housing, WavePro LT busway system can effectively reduce the eddy current hysteresis loss. The conductors, made from high conductivity copper or aluminum, will deliver a superior performance. It is particularly suitable for applications of high-rise commercial buildings, industrial plants and acts as an important part of the high-performance power distribution system:

WavePro LT busway system provides 100% or 200% neutral busbar, which can meet with the requirements of power system with high level of harmonic.

The all-aluminum housing of WavePro LT busway provides perfect ground path.

WavePro LT busway system has a variety of protection class such as IP40 the IP42, IP54 and IP65. Users can choose according to installation environment. Busway of different protection class can be freely combined.

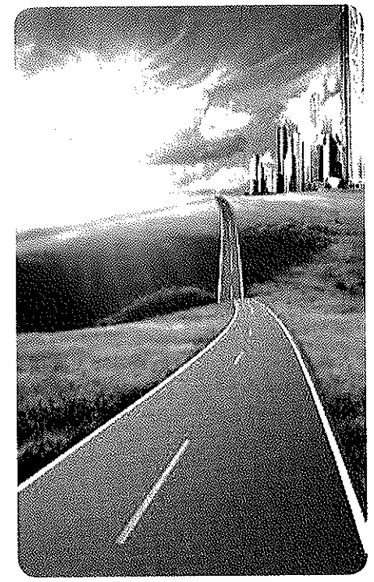

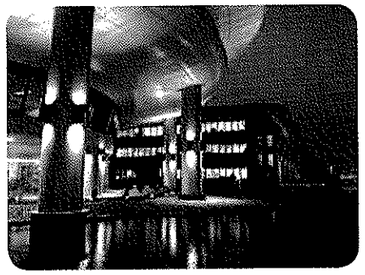

• GE China Technology Center

WavePro LT Busway Introduction

Reference standards

Complies with:	Certificates
IEC 60439-1	KEMA KEUR
IEC 60439-2	CCC
GB 7251.1	
GB 7251.2	



Production facility

WavePro LT busway factory has the first class equipment capacity and industry-leading CNC machining equipment such as bronze welding robots, automated assembly lines, GEMA automatic powder coating system, busbar profiles CNC machining centers made in Germany. Advanced technology delivers short lead times.

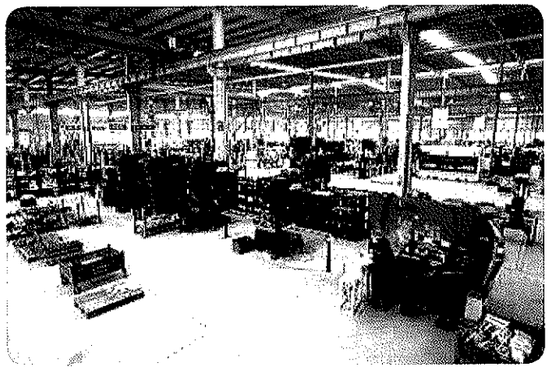

- Strictly enforced and adopted the management system certifications such as ISO9001, ISO 14001 and OHSAS 18001

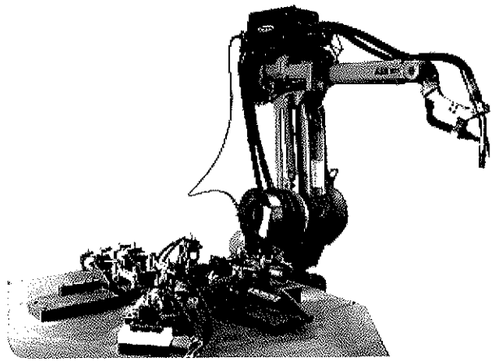

- Welding robot, to ensure stable and reliable welding quality

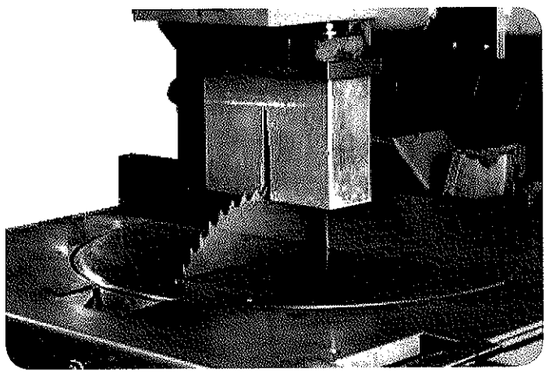

- Circular sawing machines made in Germany ensure the flat faying surface of the busbar. Advanced cutting and plating process brings the smoothness of conductor section

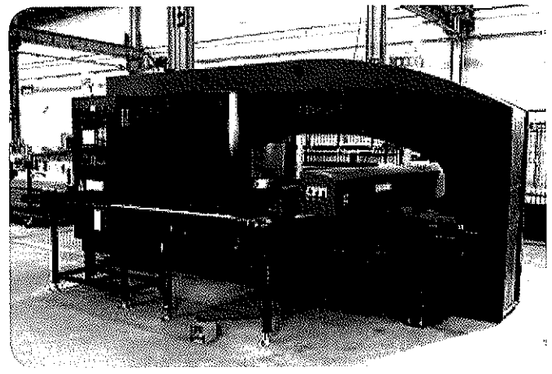

- Busbar profiles CNC machining centers made in Germany

Features of WavePro LT Busway

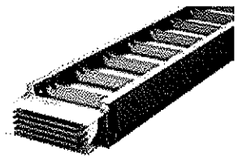

Light-weight aluminum alloy housing

- The housing is robust and reliable. The corrosion resistant, has been tested to withstand 1000 hours salt spray test
- The all-aluminum housing provides 50% capacity of ground path
- With low magnetic material housing, WavePro LT busway system can effectively reduce the eddy current hysteresis loss

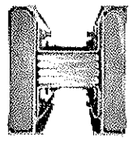

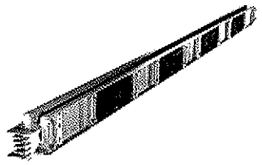

Optimized structure design

- With the most concise structure design, WavePro LT busway has cut the unnecessary weight and improved reliability
- Compact "sandwich" design in whole length, which provides good heat dissipation performance without temperature bottleneck



Advanced conductor processing technology

- Advanced cutting and plating process brings the smoothness of conductor section, Overall plating of the conductor, including cross section, delivers a more comprehensive protection.

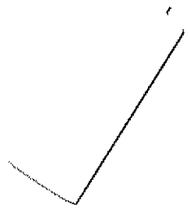

Reliable insulation

- The busbar is wholly wrapped with polyester film, which meets the requirements of RoHS and UL94
- Every busway length and fitting must pass the 3750Vac "hi-pot" test before leave the factory

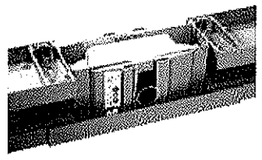

Ease of installation

- WavePro LT busway offers removable joint, which is easy for installation and maintenance
- Large sized Belleville washers ensure even pressure on Contact area
- ±4mm per joint adjustable clearance allows for the expansion and contraction of busbar
- Unique temperature indicator can remind maintenance in case of system fault

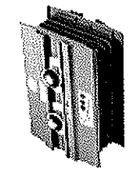



Double-headed torque limiting joint bolt

- No special torque wrench is required. Only a 16mm wrench is used to fasten the fixed captive torque bolt. When the red indication disc falls off that indicates joint is properly tightened
- The bolt is reusable after the top head is broken off by using a standard torque wrench on the second bolt head
- The standard torque is 66 ± 5N·m

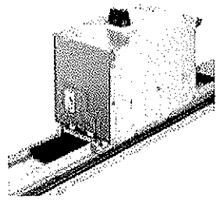

Safety Feature of the Bus Plug

- The rotary handle of plug on the top has clear ON/OFF indication
- The key lock mechanism is set for protecting the plug from maloperation and any unauthorized access
- Outlet covers prevent unintentional contact of the busbar
- Bus Plugs are automatically grounded on installation. Polarized engagement of the plug to the busway provides the installer with positive plug/phase alignment
- Bus plugs with rotary handle are provided with internal interlocking mechanisms to prevent their doors from being opened whilst energized, ensuring operational safety



GE Breakers

GE Record Plus™ circuit breakers are provided as standard offering for bus plug. Record Plus™ breakers have unique current limiting devices and integrated protection devices known as trip unit. They meet the needs of protection and isolation for low-voltage distribution lines.



IP Rating

A variety of shell protection classes meet different application environment requirements. For different application environments, WavePro LT busway provides many different options: IP40, IP42, IP54 and IP65.

Busway versus Cable

Installation shortcut:

Busway is quick and easy to install. Customer can save considerable cost by using busway as it takes only half the time to install when compared to cable.

Good heat dissipation:

Insulating layers of cables (core insulation and outer insulation) are insulating electrically as well as thermally, while busway use sandwich construction in whole length with totally enclosed housing. Heat disperses through conduction mode. Busway has superior heat dissipation performance compared to cable.

2000A, 3P4W

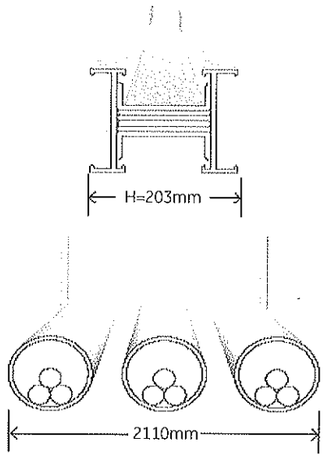

fig.8-1

WavePro LT busway weight

Weight: (kg/m)

Rated current (A)	Copper busbar 4W	Copper busbar 5W	Aluminium busbar 4W	Aluminium busbar 5W
100	-	-	8.8	9.2
160	-	-	8.8	9.2
200	-	-	8.8	9.2
250	13.4	14.4	8.8	9.2
400	13.4	14.4	9.9	10.3
500	-	-	11.0	11.5
630	14.8	15.9	12.0	12.7
800	17.4	18.8	14.1	15.0
1000	24.1	26.1	15.8	16.8
1250	27.9	30.5	18.9	20.1
1350	-	-	20.5	22.0
1600	34.4	37.8	23.5	24.3
2000	47.0	51.8	26.9	29.0
2500	59.3	65.5	33.4	34.9
3150	72.6	80.2	48.0	51.9
3800	85.7	94.8	57.9	62.8
4000	91.0	100.6	62.3	67.6
4500	114.6	126.9	-	-
5000	125.1	138.6	-	-

table.8-1

WavePro LT busway dimension

Size: mm

Rated current (A)	Copper busbar (H)	Aluminium busbar (H)
100	-	88
160	-	88
200	-	88
250	88	88
400	88	98
500	-	108
630	93	118
800	103	138
1000	128	153
1250	143	183
1350	-	198
1600	168	218
2000	203	258
2500	263	308
3150	340	460
3800	390	550
4000	410	590
4500	500	-
5000	540	-

table.8-2

Typical application of cable and busway

Below are the drawings to show the differences of typical application between cable and busway system. Cable system requires one separate cable for each power terminal. Busway system uses a main power supply busway and separates the current close to the power terminal. It saves installation space and makes whole system more safe.

Cable power supply system

Busway power supply system

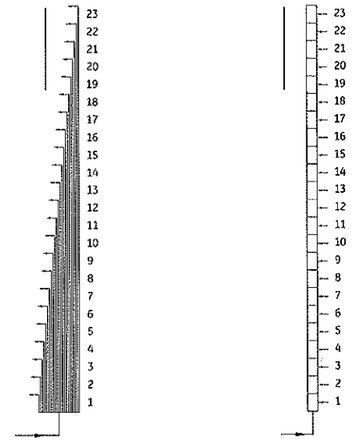

fig.9-1

Performance and price comparison of busway and cable

Item	Description	Busway	Cable
1	From transformer to incoming cubicle	Max current of busway is up to 5000A, and can match transformers up to 2.5MVA. Busway is 100% load rated in its own housing with ground.	Higher currents require additional cables per phase, installed in separate housings and derating. Additional cable ground is required.
2	Power supply control of multistage buildings	Riser busways for distributed power to each floor enables reduced switchboard sizing.	Multiple circuits are required for each floor resulting larger riser space and multiple MCCB's in the main switchboard.
3	Life	20~30 years	15~20 years
4	Alteration loss rate	10~20%	70~80%
5	Occupying area	Reduced size	Large cable tray sizing
6	Mechanical strength	Strong mechanical strength, high protection degree, applicable for large span installation.	Cable tray must be added.
7	Feature and dimension	Customized color, small volume, sandwich configuration.	Large volume
8	Current branch	Offering multi plug outlets for plug to increase branch circuits without disconnecting power supply, easy installation.	Main power supply and cable must be disconnected.
9	Installation and maintenance	Easy installation and disassembly, positive to do electric check for branch circuit without disconnecting main power supply.	The main power supply has to be disconnected down when checking either of the branch circuit.

table.9-1

Electrical Data

WavePro LT busway's aluminum housing provide an extremely low impedance ground path with small resistance (reduced watt losses) for both copper and aluminum systems.
Internal ground with 50% capacity is also available for customers with special requirements.

Grounding resistance of WavePro LT busway system (temperature=20℃)

DC resistance copper bar (Internal 50% ground bus)

No.	Rated current (A)	Resistance (10^{-6}Ω/m)
1	250	207.9
2	400	207.9
3	630	179.1
4	800	141.1
5	1000	94.2
6	1250	81.0
7	1600	64.2
8	2000	50.0
9	2500	37.6
10	3150	28.9
11	3800	24.8
12	4000	23.3
13	4500	18.8
14	5000	17.4

table.10-1

DC resistance aluminum bar (Internal 50% ground bus)

No.	Rated current (A)	Resistance (10^{-6}Ω/m)
1	100	342.7
2	160	342.7
3	200	342.7
4	250	342.7
5	400	259.8
6	500	210.7
7	630	178.1
8	800	138.0
9	1000	119.4
10	1250	95.2
11	1350	86.1
12	1600	73.4
13	2000	63.3
14	2500	50.4
15	3150	35.0
16	3800	28.6
17	4000	25.2

table.10-2

Ambient Temperature's influence on application

Within the ambient temperature of 35℃, WavePro LT busway system can continuously operate at rated current.
If the busway needs to be continuously operated at higher ambient temperature, it should be derated.
The busway current-carrying capacity = rated current x de-rating factor. (Asshown in below given tables)

Ambient temperature (℃)	Factor
35	1.00
40	0.95
45	0.90
50	0.85
55	0.80
60	0.74
65	0.67

table.10-3

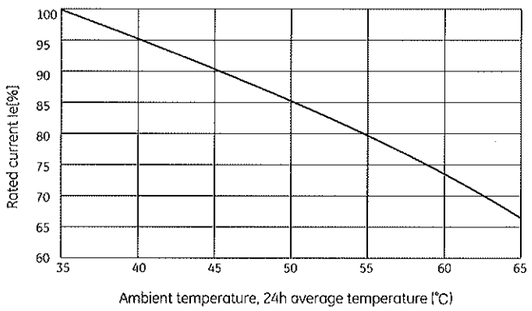

table.10-4

Resistance, reactance, impedance and voltage drop

WavePro LT busway has low voltage-drop values. Minimum reactance (X) is due to very close bar spacings (sandwiched construction) and a non-magnetic housing. Values shown are identical for plug-in and feeder.

Copper

Rated current	Rated short-time tolerant current (Icw)	Rated peak tolerant current (Ipk)	20℃	Full load/Steady-state (50Hz)							
			Resistance	Resistance	Reactance	Impedance	Voltage Drop-Concentrated Load① Line-to-Line (V/m) @ 100% Rated Load				
A	kA/s	kA	(10^{-6}Ω/m, Line-to-Neutral)				cosϕ=0.6	cosϕ=0.7	cosϕ=0.8	cosϕ=0.9	cosϕ=1.0
250	30	63	104.0	114.4	35.3	119.7	0.042	0.046	0.049	0.051	0.050
400	30	63	104.0	114.4	35.3	119.7	0.067	0.073	0.078	0.082	0.079
630	30	63	89.6	116.1	32.1	120.5	0.104	0.114	0.122	0.129	0.127
800	30	63	70.5	92.8	27.4	96.8	0.108	0.117	0.126	0.132	0.129
1000	50	105	47.1	56.1	20.7	59.8	0.087	0.093	0.099	0.103	0.097
1250	50	105	40.5	47.4	18.3	50.8	0.093	0.100	0.106	0.110	0.103
1600	50	105	32.1	41.4	15.7	44.3	0.104	0.111	0.118	0.122	0.115
2000	65	143	25.0	28.0	12.5	30.6	0.093	0.099	0.104	0.106	0.097
2500	80	176	18.8	23.9	10.7	26.2	0.099	0.105	0.111	0.113	0.103
3150	100	220	14.4	18.1	9.5	20.5	0.101	0.106	0.110	0.112	0.099
3800	100	220	12.4	15.7	6.5	17.0	0.096	0.103	0.109	0.112	0.104
4000	100	220	11.7	15.0	6.3	16.3	0.097	0.104	0.110	0.113	0.104
4500	100	220	9.4	11.5	5.4	12.7	0.088	0.093	0.097	0.099	0.090
5000	100	220	8.7	10.9	5.0	11.9	0.091	0.097	0.101	0.104	0.094

table.11-1

Aluminium

Rated current	Rated short-time tolerant current (Icw)	Rated peak tolerant current (Ipk)	20℃	Full load/Steady-state (50Hz)							
			Resistance	Resistance	Reactance	Impedance	Voltage Drop-Concentrated Load① Line-to-Line (V/m) @ 100% Rated Load				
A	kA/s	kA	(10^{-6}Ω/m, Line-to-Neutral)				cosϕ=0.6	cosϕ=0.7	cosϕ=0.8	cosϕ=0.9	cosϕ=1.0
100	10	17	171.3	187.9	35.3	191.2	0.024	0.027	0.030	0.032	0.033
160	10	17	171.3	187.9	35.3	191.2	0.039	0.043	0.048	0.051	0.052
200	10	17	171.3	187.9	35.3	191.2	0.049	0.054	0.059	0.064	0.065
250	10	17	171.3	187.9	35.3	191.2	0.061	0.068	0.074	0.080	0.081
400	30	63	129.9	148.7	29.5	151.6	0.078	0.087	0.095	0.102	0.103
500	30	63	105.3	128.3	25.6	130.8	0.084	0.093	0.102	0.110	0.111
630	30	63	89.0	108.8	22.8	111.1	0.091	0.101	0.110	0.118	0.119
800	30	63	69.0	84.0	19.1	86.2	0.091	0.100	0.109	0.116	0.116
1000	50	105	59.7	74.9	17.1	76.8	0.101	0.112	0.122	0.130	0.130
1250	50	105	47.6	60.3	14.5	62.0	0.103	0.114	0.123	0.131	0.130
1350	50	105	43.0	52.1	13.6	53.8	0.098	0.108	0.116	0.124	0.122
1600	50	105	36.7	44.7	12.1	46.3	0.101	0.110	0.119	0.126	0.124
2000	50	105	31.7	40.6	10.9	42.0	0.115	0.125	0.135	0.143	0.141
2500	50	105	25.2	30.8	9.1	32.1	0.111	0.121	0.130	0.137	0.133
3150	80	176	17.5	21.4	5.8	22.2	0.095	0.104	0.112	0.119	0.117
3800	80	176	14.3	17.5	5.0	18.2	0.096	0.104	0.112	0.118	0.115
4000	80	176	12.6	15.5	4.8	16.2	0.091	0.099	0.106	0.111	0.107

table.11-2

Note:
① Concentrated Load: Voltage Drop = $\sqrt{3}$I(Rcosφ+Xsinφ)
Distributed Load: Voltage Drop = [$\sqrt{3}$I(Rcosφ+Xsinφ)]/2

Physical Data

Straight lengths: Plug-in and feeder

Feeder busway has the minimum length of 400mm, and the maximum length of 3000mm. Other lengths can customize as needed.
Plug-in busway has the minimum length of 1000mm, and the maximum length of 3000mm.
Plug-in busway has a flexible design with optional plug outlets on both sides. The minimum space between plugs is 600mm and up to 4 plug outlets may be fixed on each side of the 3-meter standard length. The customer may reserve plug outlets for extension in the future when changes occurs in terms of the equipment load or busway run.

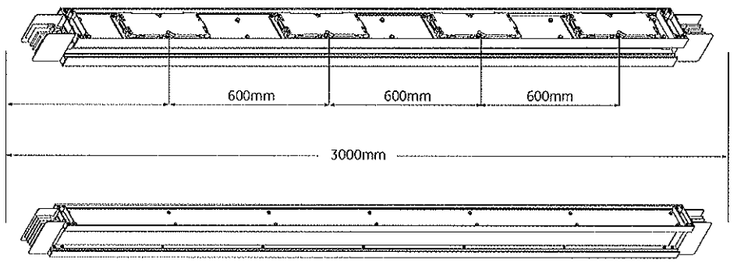

fig.12-1

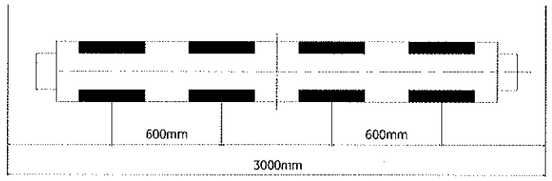

fig.12-2

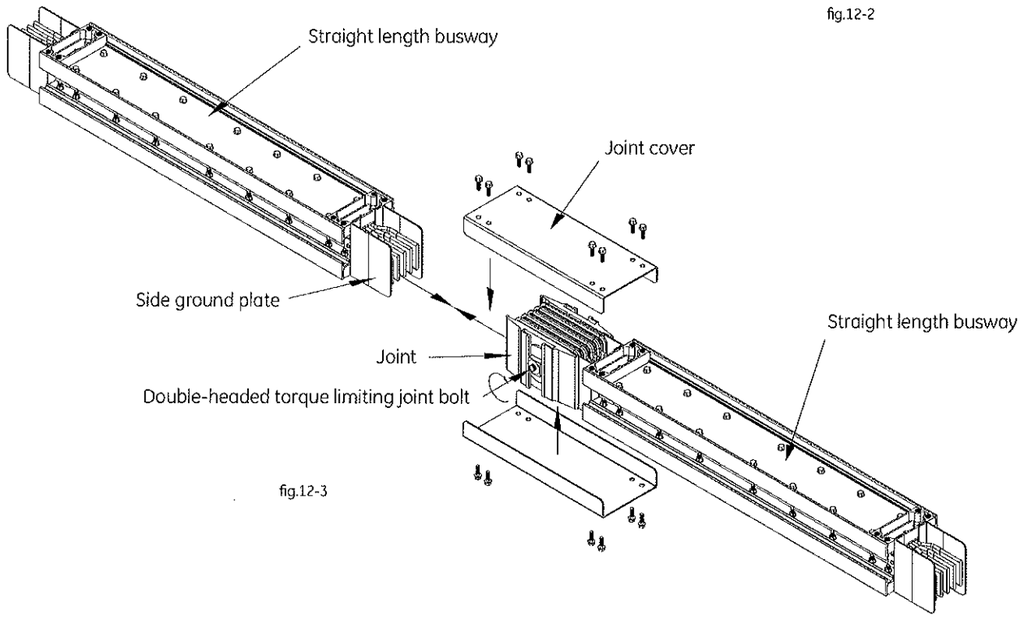

fig.12-3

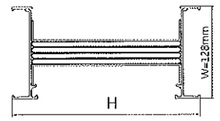

fig.13-1

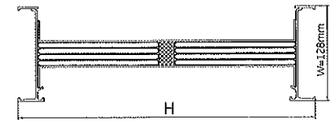

fig.13-2

Rated current (A)	Copper H (mm)	Copper Approximate Weight (kg/m) 4 Wire	Copper Approximate Weight (kg/m) 5 Wire	Aluminum H (mm)	Aluminum Approximate Weight (kg/m) 4 Wire	Aluminum Approximate Weight (kg/m) 5 Wire	fig.
250	89	13.4	14.4	89	8.8	9.2	
400	89	13.4	14.4	99	9.9	10.3	
500	-	-	-	109	11	11.5	
630	94	14.8	15.9	119	12	12.7	
800	104	17.4	18.8	139	14.1	15	
1000	129	24.1	26.1	154	15.8	16.8	13-1
1250	144	27.9	30.5	184	18.9	20.1	
1350	-	-	-	199	20.5	22	
1600	169	34.4	37.8	219	22.7	24.3	
2000	204	43.6	48.0	259	26.9	29	
2500	264	59.3	65.5	309	32.2	34.9	
3150	341	72.6	80.2	461	48	51.9	
3800	391	85.7	94.8	551	57.9	62.8	
4000	411	91.0	100.6	591	62.3	67.6	13-2
4500	501	114.6	126.9	-	-	-	
5000	541	125.1	138.6	-	-	-	

Note：The size and weight data for 100A-250A aluminum busway is the some.
table.13-1

Fittings

WavePro LT busway system has a complete family of fittings to meet virtually all layout requirements using the compact minimum sizes. Special turns such as flat angles greater than 90° and crosses are also available. Each piece of busway is labeled to maintain proper phasing. All housing width and depth dimensions are identical to straight lengths.

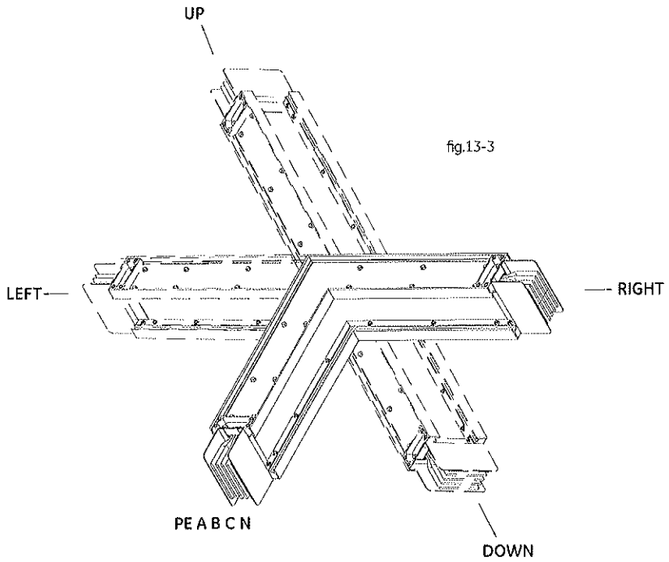

fig.13-3

Physical Data

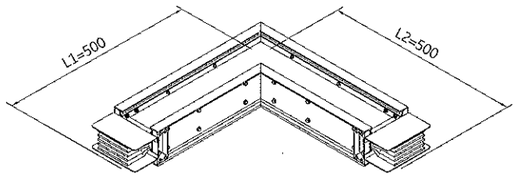

Flatwise elbow
fig.14-1

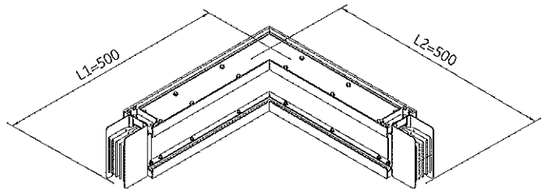

Edgewise elbow
fig.14-2

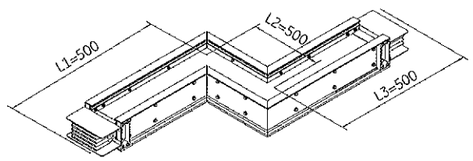

Flatwise offset
fig.14-3

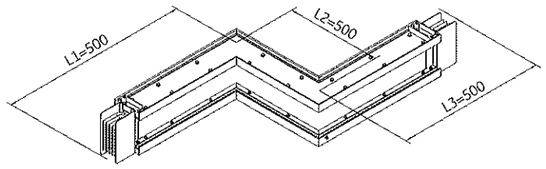

Edgewise offset
fig.14-4

Flatwise elbow

Size: mm

Rated current (A)	Copper Minimum		Aluminium Minimum	
	L1	L2	L1	L2
100	-	-	224	224
160	-	-	224	224
200	-	-	224	224
250	224	224	224	224
400	224	224	229	229
500	-	-	234	234
630	227	227	239	239
800	232	232	249	249
1000	244	244	257	257
1250	252	252	272	272
1350	-	-	279	279
1600	264	264	294	294
2000	282	282	309	309
2500	312	312	342	342
3150	350	350	410	410
3800	375	375	455	455
4000	385	385	475	475
4500	430	430	-	-
5000	450	450	-	-

table.14-1

Edgewise elbow

For busway of all current levels, L1 and L2 standard dimensions are as shown in the figures, with minimum size: 245mm.

Flatwise offset

Size: mm

Rated current (A)	Copper Minimum			Aluminium Minimum		
	L1	L2	L3	L1	L2	L3
100	-	-	-	224	150	224
160	-	-	-	224	150	224
200	-	-	-	224	150	224
250	224	150	224	224	150	224
400	224	150	224	229	150	229
500	-	-	-	234	150	234
630	227	150	227	239	150	239
800	232	150	232	249	150	249
1000	244	150	244	257	150	257
1250	252	150	252	272	150	272
1350	-	-	-	279	150	279
1600	264	150	264	294	150	294
2000	282	150	282	309	150	309
2500	312	150	312	342	150	342
3150	350	150	350	410	150	410
3800	375	150	375	455	150	455
4000	385	150	385	475	150	475
4500	430	150	430	-	-	-
5000	450	150	450	-	-	-

table.14-2

Edgewise offset

For busway of all current levels, L1, L2 and L3 standard dimensions are as shown in the figures, with minimum size L1=245mm, L2=150mm, L3=245mm.

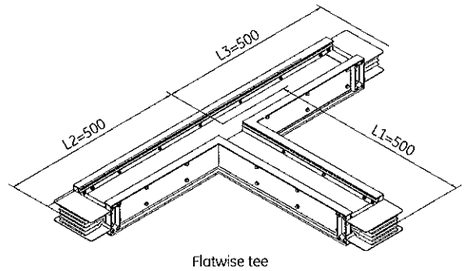

Flatwise tee
fig.15-1

Flatwise tee

Size: mm

Rated current (A)	Copper Minimum		Aluminium Minimum	
	L1	L2/L3	L1	L2/L3
100	-	-	224	224
160	-	-	224	224
200	-	-	224	224
250	224	224	224	224
400	224	224	229	229
500	-	-	234	234
630	227	227	239	239
800	232	232	249	249
1000	244	244	257	257
1250	252	252	272	272
1350	-	-	279	279
1600	264	264	294	294
2000	282	282	309	309
2500	312	312	342	342
3150	350	350	410	410
3800	375	375	455	455
4000	385	385	475	475
4500	430	430	-	-
5000	450	450	-	-

For busway of all current levels, L1, L2 and L3 standard dimensions are as shown in the figure.

table.15-1

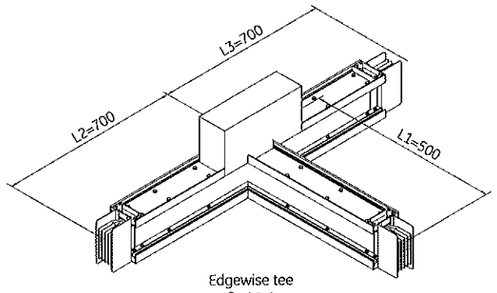

Edgewise tee
fig.15-2

Edgewise tee

Size: mm

Rated current (A)	Copper Minimum		Aluminium Minimum	
	L1	L2/L3	L1	L2/L3
100	-	-	300	340
160	-	-	300	340
200	-	-	300	340
250	300	340	300	340
400	300	340	300	350
500	-	-	300	360
630	300	345	300	370
800	300	355	300	390
1000	300	380	300	405
1250	300	395	300	435
1350	-	-	300	450
1600	300	420	300	480
2000	300	455	300	510
2500	300	515	300	560
3150	300	435	300	495
3800	300	460	300	540
4000	300	470	300	560
4500	300	515	-	-
5000	300	535	-	-

L1, L2 and L3 standard dimensions are as shown in the figure.

table.15-2

Physical Data

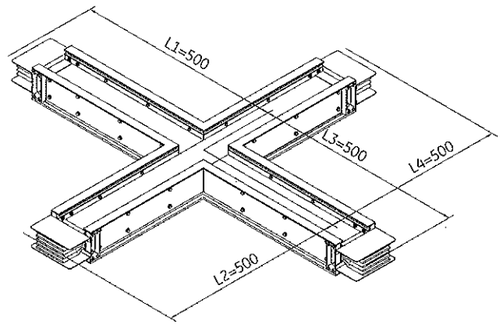

Flatwise cross
fig.16-1

Flatwise cross

Size: mm

Rated current (A)	Copper Minimum				Aluminium Minimum			
	L1	L2	L3	L4	L1	L2	L3	L4
100	-	-	-	-	224	224	224	224
160	-	-	-	-	224	224	224	224
200	-	-	-	-	224	224	224	224
250	224	224	224	224	224	224	224	224
400	224	224	224	224	229	229	229	229
500	-	-	-	-	234	234	234	234
630	227	227	227	227	239	239	239	239
800	232	232	232	232	249	249	249	249
1000	244	244	244	244	257	257	257	257
1250	252	252	252	252	272	272	272	272
1350	-	-	-	-	279	279	279	279
1600	264	264	264	264	294	294	294	294
2000	282	282	282	282	309	309	309	309
2500	312	312	312	312	342	342	342	342
3150	350	350	350	350	410	410	410	410
3800	375	375	375	375	455	455	455	455
4000	385	385	385	385	475	475	475	475
4500	430	430	430	430	-	-	-	-
5000	450	450	450	450	-	-	-	-

For busway of all current levels, standard dimensions are as shown in the figure.

table.16-1

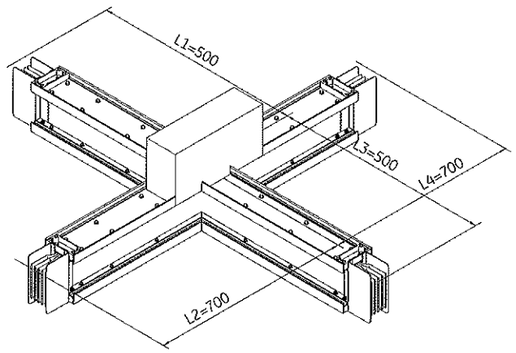

Edgewise cross
fig.16-2

Edgewise cross

Size: mm

Rated current (A)	Copper Minimum				Aluminium Minimum			
	L1	L2	L3	L4	L1	L2	L3	L4
100	-	-	-	-	300	372	300	372
160	-	-	-	-	300	372	300	372
200	-	-	-	-	300	372	300	372
250	300	372	300	372	300	372	300	372
400	300	372	300	372	300	382	300	382
500	-	-	-	-	300	392	300	392
630	300	377	300	377	300	402	300	402
800	300	387	300	387	300	422	300	422
1000	300	412	300	412	300	437	300	437
1250	300	427	300	427	300	467	300	467
1350	-	-	-	-	300	482	300	482
1600	300	452	300	452	300	512	300	512
2000	300	487	300	487	300	542	300	542
2500	300	547	300	547	300	607	300	607
3150	300	467	300	467	300	527	300	527
3800	300	492	300	492	300	572	300	572
4000	300	502	300	502	300	592	300	592
4500	300	547	300	547	-	-	-	-
5000	300	567	300	567	-	-	-	-

For busway of all current levels, standard dimensions are as shown in the figure.

table.16-2

Flanged end

Flanged end and end tap box can be used in connection with switchgear and transformer of any type and users can determine the spacing between the stubs of the bus bar based on the specific applications.

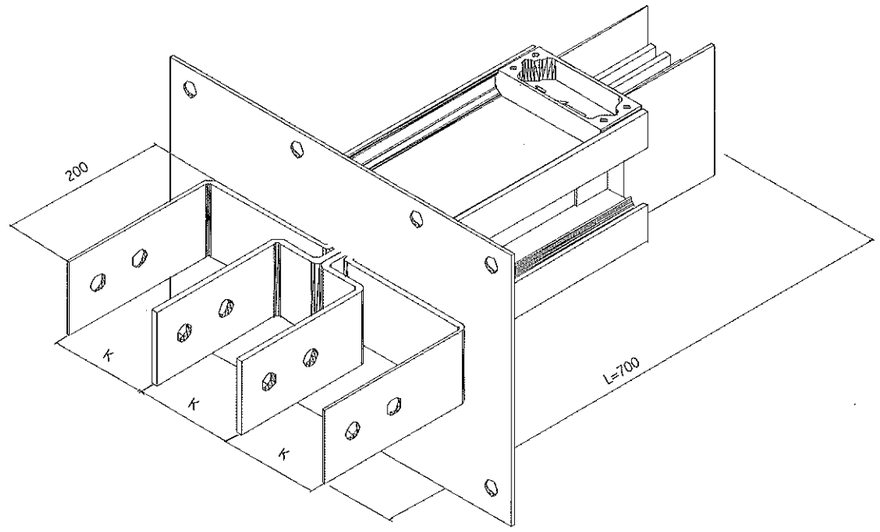

fig.17-1

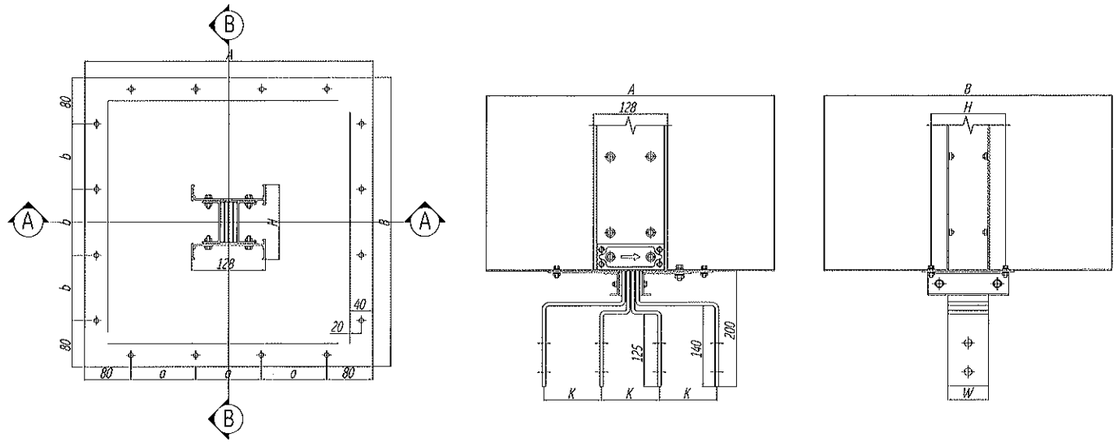

FLANGED END STUB PLAN VIEW

SECTION 'A' - 'A'

SECTION 'B' - 'B'

fig.17-2

Note:
1. As a standard flanged end, when the bus bar current is less than or equal to 1600A, K=100mm; when the bus bar current is more than 1600A, K=120mm.
2.All dimensions provided are for standard products. Please contact our engineers for customized products' dimensions.

Physical Data

Flanged end side dam

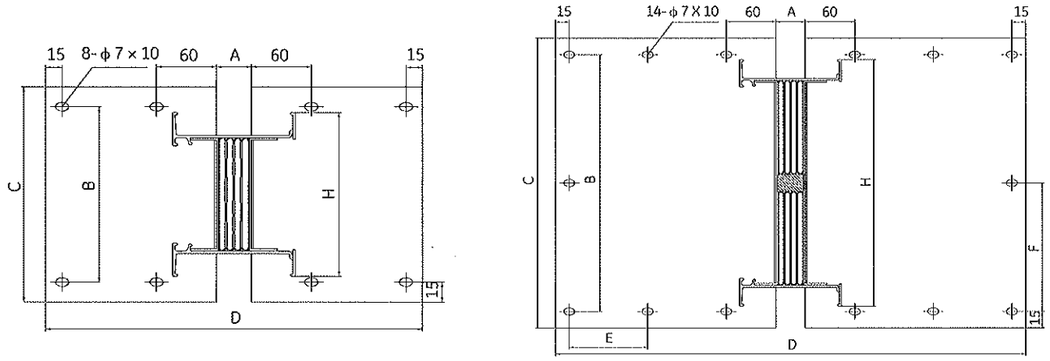

fig.18-1

Copper

Size: mm

Rated current (A)	H	A		B	C	D	
		4 Wire	5 Wire			4 Wire	5 Wire
250	88	35	39	90	120	390	490
400	88	35	39	90	120	390	490
500	-	-	-	-	-	-	-
630	93	35	39	95	125	390	490
800	103	35	39	105	135	390	490
1000	128	35	39	130	160	390	490
1250	143	35	39	145	175	390	490
1350	-	-	-	-	-	-	-
1600	168	35	39	170	200	390	490
2000	203	35	39	205	235	450	570
2500	263	35	39	265	295	450	570
3150	340	35	39	342	372	450	570
3800	390	35	39	392	422	450	570
4000	410	35	39	412	442	450	570
4500	500	35	39	502	532	450	570
5000	540	35	39	542	572	450	570

table.18-1

Aluminium

Size: mm

Rated current (A)	H	A		B	C	D	
		4 Wire	5 Wire			4 Wire	5 Wire
100	88	35	39	90	120	390	490
160	88	35	39	90	120	390	490
200	88	35	39	90	120	390	490
250	88	35	39	90	120	390	490
400	98	35	39	100	130	390	490
500	108	35	39	110	140	390	490
630	118	35	39	120	150	390	490
800	138	35	39	140	170	390	490
1000	153	35	39	155	185	390	490
1250	183	35	39	185	215	390	490
1350	198	35	39	200	230	390	490
1600	228	35	39	230	260	390	490
2000	258	35	39	260	290	450	570
2500	323	35	39	325	355	450	570
3150	460	35	39	462	492	450	570
3800	550	35	39	552	582	450	570
4000	590	35	39	592	622	450	570

table.18-2

Note:

1. As shown in the figure, for the location of the hole of outboard, it shall be 15mm away from the outer edge; while for the location of the one of inboard, it shall be 60mm away from the inner edge. The rest distance wherein is given uniformly for mid holes according to situation.
2. E and F indicate the distance between the centers of two adjacent holes, and the value shall be limited with the extension from 100mm to 250mm, E and F will be confirmed and sent to the customer when the end tap box dimension is confirmed.

Flanged end details

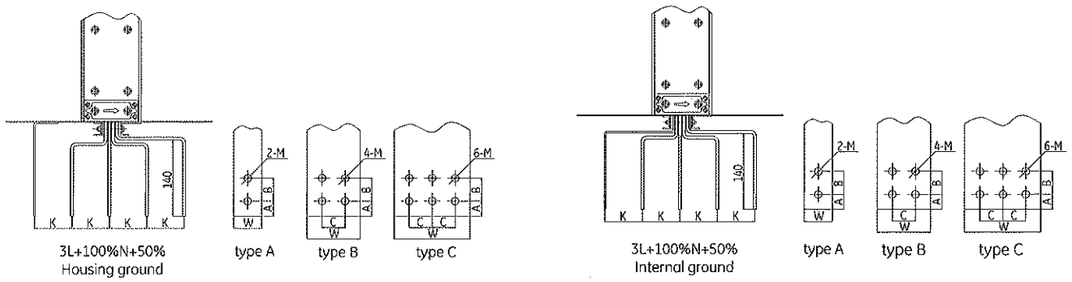

fig.19-1

Copper

Size: mm

Rated current (A)	A	B	C	K	2-M	Type
250	20	40	-	100	2-ϕ11	A
400	20	40	-	100	2-ϕ11	A
500	-	-	-	-	-	-
630	20	40	-	100	2-ϕ11	A
800	20	40	-	100	2-ϕ11	A
1000	25	50	-	100	2-ϕ14	A
1250	20	40	40	100	4-ϕ14	B
1600	25	50	50	100	4-ϕ18	B
2000	30	60	60	120	4-ϕ18	B
2500	30	60	60	120	6-ϕ18	C
3150	30	60	60	120	4-ϕ18	B
3800	25	50	50	120	6-ϕ18	C
4000	25	50	50	120	6-ϕ18	C
4500	30	60	60	120	6-ϕ18	C
5000	30	60	60	120	6-ϕ18	C

table.19-1

Aluminium

Size: mm

Rated current (A)	A	B	C	K	2-M	Type
100	20	40	-	100	2-ϕ11	A
160	20	40	-	100	2-ϕ11	A
200	20	40	-	100	2-ϕ11	A
250	20	40	-	100	2-ϕ11	A
400	20	40	-	100	2-ϕ11	A
500	25	50	-	100	2-ϕ14	A
630	25	50	-	100	2-ϕ14	A
800	20	40	40	100	4-ϕ14	B
1000	20	40	40	100	4-ϕ14	B
1250	30	60	60	100	4-ϕ18	B
1350	30	60	60	100	4-ϕ18	B
1600	25	50	50	100	6-ϕ18	C
2000	30	60	60	120	6-ϕ18	C
2500	30	60	60	120	6-ϕ18	C
3150	25	50	50	120	6-ϕ18	C
3800	30	60	60	120	6-ϕ18	C
4000	30	60	60	120	6-ϕ18	C

table.19-2

Note: For the current equal to or above 3150A, two bars shall be adopted for per phase, and the hole dimension shown in the tab shall be furnished in both bars.

Physical Data

End tap box

WavePro LT busway system tap boxes are used where a run of busway is fed by cable. We offer end tap box in standard size (1m × 1m × 1m), while we can also supply with nonstandard box according to site measurements.
All provided dimensions are for standard products. Please contact our engineers for customized product's dimensions.

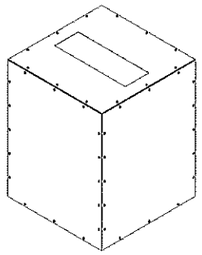

fig.20-1

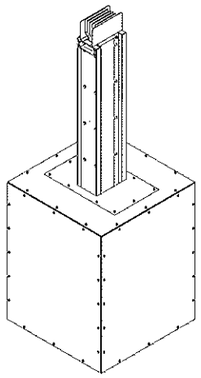

fig.20-2

Terminal cover

Terminal cover is installed to terminate the busway to prevent ingress of external materials/particles and contact with live parts, thus enclosing the whole busway system.

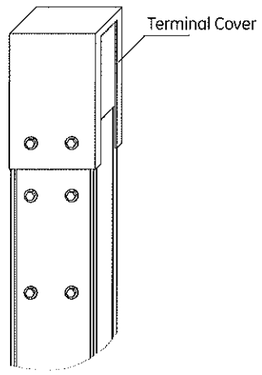

fig.20-3

Flanged end cutout and hole pattern

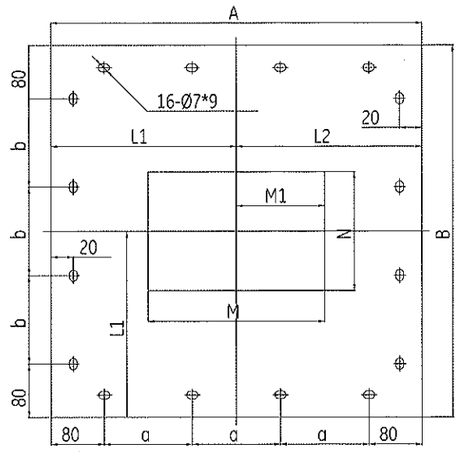

fig.21-1

Copper

Size: mm

Rated current (A)	M		N
	4 Wire	5 Wire	
250	330	430	60
400	330	430	60
500	-	-	-
630	330	430	65
800	330	430	75
1000	330	430	100
1250	330	430	115
1600	330	430	140
2000	390	510	175
2500	390	510	235
3150	390	510	312
3800	390	510	362
4000	390	510	382
4500	390	510	472
5000	390	510	512

table.21-1

Aluminium

Size: mm

Rated current (A)	M		N
	4 Wire	5 Wire	
100	330	430	60
160	330	430	60
200	330	430	60
250	330	430	60
400	330	430	70
500	330	430	80
630	330	430	90
800	330	430	110
1000	330	430	125
1250	330	430	155
1350	330	430	170
1600	330	430	200
2000	390	510	230
2500	390	510	295
3150	390	510	432
3800	390	510	522
4000	390	510	562

table.21-2

Note:

1. "A" indicates the length of end tap box while "B" indicates the width, they are based on the site situation.
2. "L1" and "L2" are based on the location of flanged end. For standard product, they' are the same.
3. "M1" is based on the location of flanged end. For standard product, M1=M/2.
4. As shown in the figure, the hole in the corner shall be 80mm away from one edge of end tap box and 20mm away from the other, the rest distance wherein is given uniformly for mid holes according to situation.
5. "a" and "b" indicate the distance between the centers of two adjacent holes, and the value shall be limited with the extension from 100mm to 250mm.

Physical Data

Wall flange

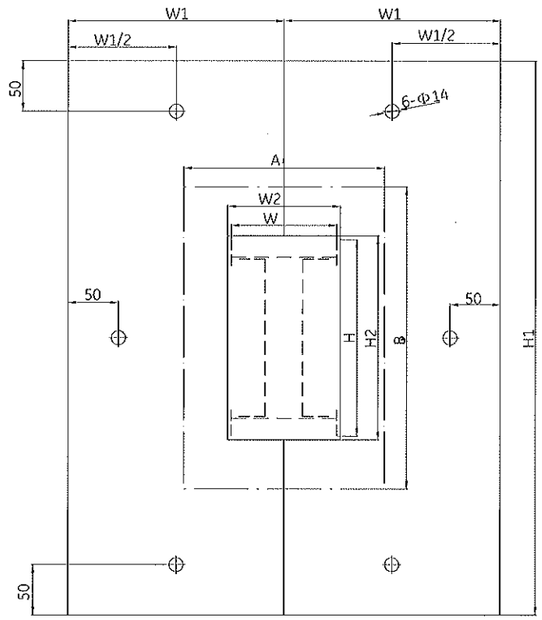

fig.22-1

Note:

1. W indicates the width of busway while H indicates the height;
2. A indicates the width of cutout while B indicates the height;
3. W1 indicates the external width of flange while H1 indicates the height;
4. W2 indicates the internal width of flange while H2 indicates the height;
5. The flange is dimidiate;
6. Flange is necessary in both sides of the cutout;
7. Flange is fixed against the wall with internal expansion bolt.

Size: mm

Rated current (A)	External dimension of busway W×H		Dimension of cutout A×B (≥)		External dimension of wall flange W1×H1 (≥)		Internal dimension of wall flange W2×H2 (≥)	
	Cu	Al	Cu	Al	Cu	Al	Cu	Al
100	-	128×88	-	230×190	-	215×390	-	140×100
160	-	128×88	-	230×190	-	215×390	-	140×100
200	-	128×88	-	230×190	-	215×390	-	140×100
250	128×88	128×88	230×190	230×190	215×390	215×390	140×100	140×100
400	128×88	128×98	230×190	230×200	215×390	215×400	140×100	140×110
500	-	128×108	-	230×210	-	215×410	-	140×120
630	128×93	128×118	230×195	230×220	215×395	215×420	140×105	140×130
800	128×103	128×138	230×205	230×240	215×405	215×440	140×115	140×150
1000	128×128	128×153	230×230	230×255	215×430	215×455	140×140	140×165
1250	128×143	128×183	230×245	230×285	215×445	215×485	140×155	140×195
1350	-	128×198	-	230×300	-	215×500	-	140×210
1600	128×168	128×228	230×270	230×330	215×470	215×530	140×180	140×240
2000	128×203	128×258	230×305	230×360	215×505	215×560	140×215	140×270
2500	128×263	128×323	230×365	230×425	215×565	215×625	140×275	140×335
3150	128×340	128×460	230×442	230×562	215×642	215×762	140×352	140×472
3800	128×390	128×550	230×492	230×652	215×692	215×852	140×402	140×562
4000	128×410	128×590	230×512	230×692	215×712	215×892	140×422	140×602
4500	128×500	-	230×602	-	215×802	-	140×512	-
5000	128×540	-	230×642	-	215×842	-	140×552	-

table.22-1

Expansion length

Expansion length is the transition section compensating thermal expansion, it is normally set at each 60m in linear distance.

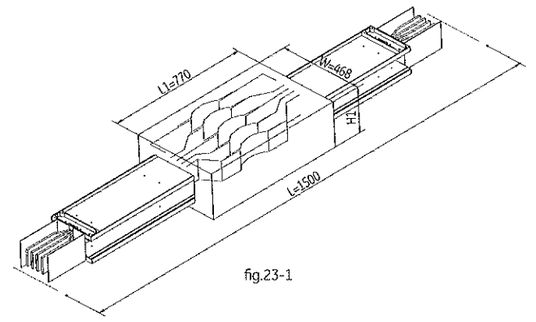

fig.23-1

Note: H1=H+67 (H is bus height)

Reducer

This transition section is used for reducing busbar size according to the final load, it provides users with more economic power transmission and distribution method.

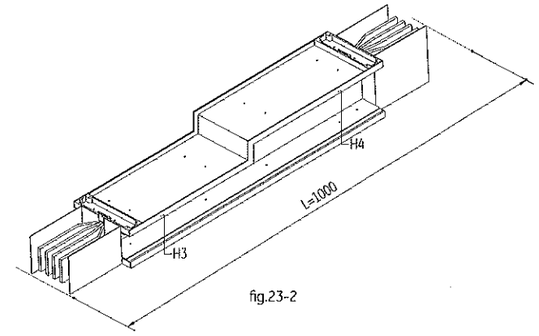

fig.23-2

Note: H3, H4 is the height of the busway.
Please refer to table.13-1 & 13-2.

Transposition section

Transposition section is the transition part used for changing phase sequence of the busbar. Its minimum size is 1500mm. The phase sequence of both sides needs to be provided by the customer.

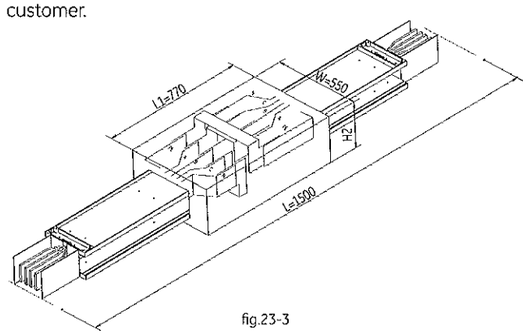

fig.23-3

Note: H2=H+200mm (H is busbar height)

Note:
1. For H dimensions please refer to table.12-2.
2. All dimensions provided are for standard products. Please contact our engineers for customized product's dimensions.

Physical Data

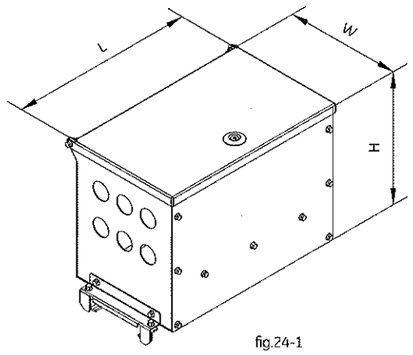

fig.24-1

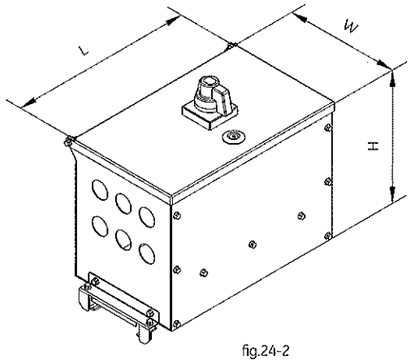

fig.24-2

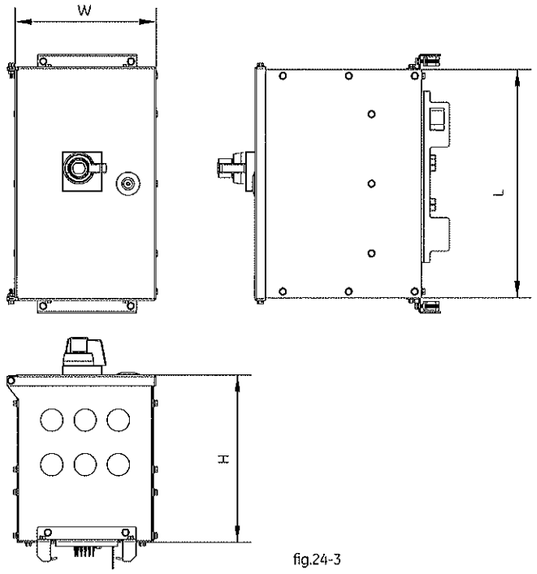

fig.24-3

Bus plug

WavePro LT bus plugs are used to Supply electrical power directly to the load from the busway system. The protection component in a bus plug can be either a circuit breaker or fuse.

3-Pole or 4-Pole circuit breakers may be installed in the plug for load protection including accessories of circuit breakers such as rotary handles, shunt release, thermal magnetic release and leakage-current protection module

Physical data of plug (L × W × H) mm

*For any nonstandard dimension, please contact us.

Operation mode	Rated current (A)	Dimension of plug (L × W × H) mm
Manual operating mechanism fig.24-1	25~160	450 × 240 × 260
	200, 250	550 × 260 × 280
	400	650 × 300 × 300
Rotary operating mechanism fig.24-2	25~160	430 × 240 × (275+70[1])
	200, 250	550 × 260 × (320+70[1])
	400	650 × 300 × (340+70[1])

table.24-1

(1) Additional 70mm dimension indicated is for the space required to install rotary handle.

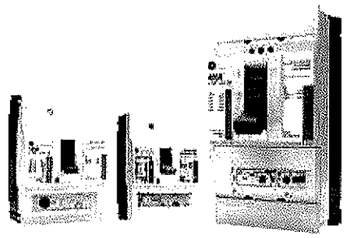

Bus plug protection components

GE Record Plus™ circuit breakers are provided as standard offering for WavePro LT bus plug. The circuit will be reliably protected.
Record Plus™ breakers have unique current limiting devices and integrated protection devices known as trip unit. They meet the needs of protection and isolation for low-voltage distribution lines.

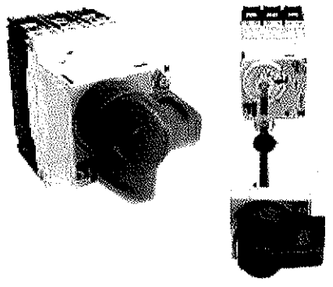

Easy-to-mount rotary handles

Fitted onto the breaker front the device allows the vertical handle movement to be changed into a rotary operation with the OFF position at 3 o'clock or the OFF position at 6 o'clock. An accurate position indication of the three breaker positions ON-OFF and TRIPPED is provided by a totally new internal design that also allows the user to install one or two early closing and late opening contact blocks which are the same as the standard internal accessory types.

FD160

Rated at 160A is available as a thermalmagnetic breaker, a moulded case switch, and as a magnetic-only motor circuit protector.

FE160 and FE250

Rated at 160 and 250A, the FE frame sizes are designed for side-by-side mounting with FD160 types in panels. FE sizes are equipped with an easily accessible busbar connection and can also be supplied with cable lugs for use with copper or aluminum conductors. The design allows the use of interchangeable thermal-magnetic, magnetic-only, and electronic trip units.

FG400 and FG630

Rated at 400 and 630A, the FG frame size includes all of the advanced features of the FD and FE frame sizes.
The FG connection area features easy-to-access busbar connections. Cable lugs for use with single or multiple copper or aluminum conductors are optionally available. The breaker is designed for use with interchangeable electronic trip units that can be easily adapted to multiple levels of protection.

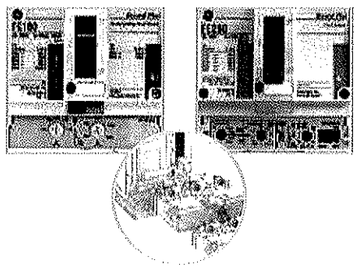

Electromechanical devices

Devices available in a current range of 16 to 1250A as single, two, three or four pole devices. The electromechanical trip units exist as thermal magnetic, magnetic-only and generator protection models. The high-performance thermal magnetic trip units exist as selective and nonselective versions and are equipped with a fault indicator that distinguishes between overload and short-circuit events in accordance with HD 384(1). This patented safety feature allows users to reduce downtime by resetting the breaker directly after an overload event.

Physical Data

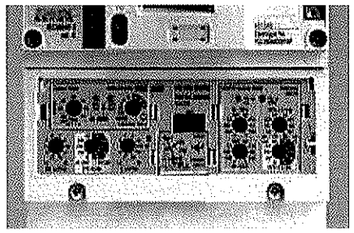

Electronic devices SMR2

Designed to provide a flexible solution for all protection scenarios the standard device provides an extensive set of protection features including:

- Long Time Protection adjustable from 0.4 to 1x In
- A choice of up to five Long Time Delay Bands
- Short Time protection adjustable from 2 to 12x In
- A choice of up to five Short Time Delay Bands with a set of optional I2T bands
- Instantaneous Short Circuit Protection adjustable from 2 to 13x In
- Zone selective interlock on ST and GF functions (When a GF module is added)
- A Battery that supplies the Thermal Mermory function

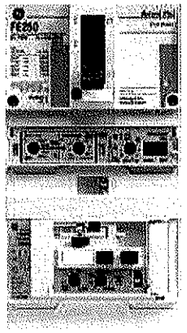

Personnel protection

A line of three and four pole add-on residual current devices are available as side or bottom mounted units with ratings up to 630A and sensitivities of 30mA to 10A. The devices slide on to the breaker easily and are fixed by simply tightening the main electrical connections. Designed to meet the latest standards, they each have a mechanical and electrical test option and share a common cut out. A de-electric disconnect plug unit and setting areas with transparent, tamper-free cover are standard for the whole line. For ratings above 630A, seperate sensors and relays are available, or an integrated ground fault protection can be used.



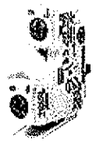

Auxiliary and Bell Alarm contacts

The internal accessories are common to Record Plus™ FD, FE and FG circuit breakers. They offer a unique, patented, auxiliary contact block with normally open and normally closed contacts which are suitable for use in high current and high fidelity applications. Selective Fault Indication is possible by using one or a combination of the two Bell Alarm contact types.





Releases

The shunt and undervoltage releases are a totally new design combining the best in electromechanical and electronic engineering. Most releases are common for AC and DC voltages and are available in a wide voltage range. They combine low power consumption, a kiss-free, lock-out design and the ease of use common to all Record Plus™ internal accessories.

Busway Plugs with GE Record Plus™ breaker

With FD160 Breaker-3 Poles/3 Trips, Rotary Handle

Rated current (A)	Icc/415V	Breaker	SKU(standard)	SKU(with shunt trip)
25	50kA	FDN160 25A, 50KA 3P	WTPR3P0240FDN	WTPR3P0240FDNS
32	50kA	FDN160 32A, 50KA 3P	WTPR3P0340FDN	WTPR3P0340FDNS
40	50kA	FDN160 40A, 50KA 3P	WTPR3P0440FDN	WTPR3P0440FDNS
50	50kA	FDN160 50A, 50KA 3P	WTPR3P0540FDN	WTPR3P0540FDNS
63	50kA	FDN160 63A, 50KA 3P	WTPR3P0640FDN	WTPR3P0640FDNS
80	50kA	FDN160 80A, 50KA 3P	WTPR3P0840FDN	WTPR3P0840FDNS
100	50kA	FDN160 100A, 50KA 3P	WTPR3P1040FDN	WTPR3P1040FDNS
125	50kA	FDN160 125A, 50KA 3P	WTPR3P1340FDN	WTPR3P1340FDNS
160	50kA	FDN160 160A, 50KA 3P	WTPR3P1640FDN	WTPR3P1640FDNS

table.27-1

With FD160 Breaker-4 Poles/4 Trips, Rotary Handle

Rated current (A)	Icc/415V	Breaker	SKU(standard)	SKU(with shunt trip)
25	50kA	FDN160 25A, 50KA 4P	WTPR4P0240FDN	WTPR4P0240FDNS
32	50kA	FDN160 32A, 50KA 4P	WTPR4P0340FDN	WTPR4P0340FDNS
40	50kA	FDN160 40A, 50KA 4P	WTPR4P0440FDN	WTPR4P0440FDNS
50	50kA	FDN160 50A, 50KA 4P	WTPR4P0540FDN	WTPR4P0540FDNS
63	50kA	FDN160 63A, 50KA 4P	WTPR4P0640FDN	WTPR4P0640FDNS
80	50kA	FDN160 80A, 50KA 4P	WTPR4P0840FDN	WTPR4P0840FDNS
100	50kA	FDN160 100A, 50KA 4P	WTPR4P1040FDN	WTPR4P1040FDNS
125	50kA	FDN160 125A, 50KA 4P	WTPR4P1340FDN	WTPR4P1340FDNS
160	50kA	FDN160 160A, 50KA 4P	WTPR4P1640FDN	WTPR4P1640FDNS

table.27-2

With FE/FG Breaker-3 Poles with 3 Trips, Rotary Handle

Rated current (A)	Icc/415V	Breaker	SKU(standard)	SKU(with shunt trip)
25	50kA	FEN160 25A, 50KA 3P	WTPR3P0240FEN	WTPR3P0240FENS
32	50kA	FEN160 32A, 50KA 3P	WTPR3P0340FEN	WTPR3P0340FENS
40	50kA	FEN160 40A, 50KA 3P	WTPR3P0440FEN	WTPR3P0440FENS
50	50kA	FEN160 50A, 50KA 3P	WTPR3P0540FEN	WTPR3P0540FENS
63	50kA	FEN160 63A, 50KA 3P	WTPR3P0640FEN	WTPR3P0640FENS
80	50kA	FEN160 80A, 50KA 3P	WTPR3P0840FEN	WTPR3P0840FENS
100	50kA	FEN160 100A, 50KA 3P	WTPR3P1040FEN	WTPR3P1040FENS
125	50kA	FEN160 125A, 50KA 3P	WTPR3P1340FEN	WTPR3P1340FENS
160	50kA	FEN160 160A, 50KA 3P	WTPR3P1640FEN	WTPR3P1640FENS
200	50kA	FEN250 200A, 50KA 3P	WTPR3P2040FEN	WTPR3P2040FENS
250	50kA	FEN250 250A, 50KA 3P	WTPR3P2540FEN	WTPR3P2540FENS
400	50kA	FGN630 400A, 50KA 3P	WTPR3P4040FGN	WTPR3P4040FGNS

table.27-3

With FE/FG Breaker-4 Poles with 4 Trips, Rotary Handle

Rated current (A)	Icc/415V	Breaker	SKU(standard)	SKU(with shunt trip)
25	50kA	FEN160 25A, 50KA 4P	WTPR4P0240FEN	WTPR4P0240FENS
32	50kA	FEN160 32A, 50KA 4P	WTPR4P0340FEN	WTPR4P0340FENS
40	50kA	FEN160 40A, 50KA 4P	WTPR4P0440FEN	WTPR4P0440FENS
50	50kA	FEN160 50A, 50KA 4P	WTPR4P0540FEN	WTPR4P0540FENS
63	50kA	FEN160 63A, 50KA 4P	WTPR4P0640FEN	WTPR4P0640FENS
80	50kA	FEN160 80A, 50KA 4P	WTPR4P0840FEN	WTPR4P0840FENS
100	50kA	FEN160 100A, 50KA 4P	WTPR4P1040FEN	WTPR4P1040FENS
125	50kA	FEN160 125A, 50KA 4P	WTPR4P1340FEN	WTPR4P1340FENS
160	50kA	FEN160 160A, 50KA 4P	WTPR4P1640FEN	WTPR4P1640FENS
200	50kA	FEN250 200A, 50KA 4P	WTPR4P2040FEN	WTPR4P2040FENS
250	50kA	FEN250 250A, 50KA 4P	WTPR4P2540FEN	WTPR4P2540FENS
400	50kA	FGN630 400A, 50KA 4P	WTPR4P4040FGN	WTPR4P4040FGNS

table.27-4

Accessories

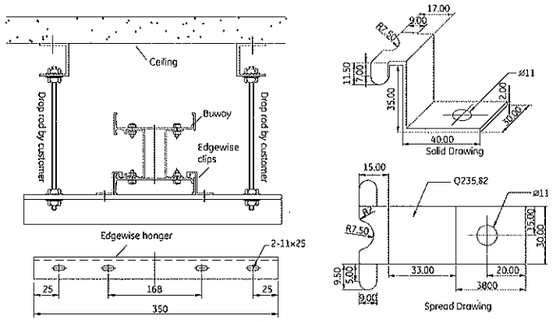

fig.28-1

Edgewise hanger (Horizontal)

The edgewise hanger is used when the busway is edgewise installed. It is suitable for all ampere ratings.

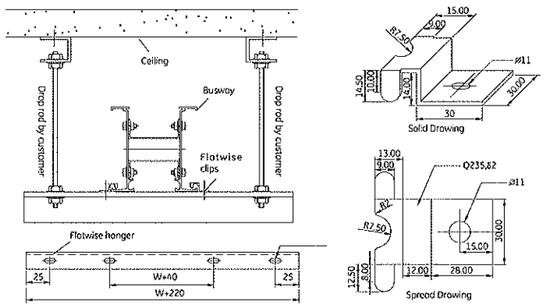

fig.28-2

Flatwise hanger (Horizontal)

The flatwise hanger is used when the busway is flatwise installed. It is suitable for all ampere ratings. But dimension of the flatwise installation beam is based on the ampere rating. In the pic below W is the width of the busway.

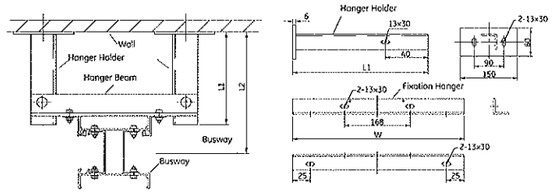

fig.28-3

Fixed hanger (Vertical)

The fixed hanger is used when the busway is vertically installed. It is installed on the wall between the two floors. It keeps the busway from moving horizontally. It is suitable for all ampere ratings. Fixed hanger has two parts, a pair of "Hanger Holder" which are perpendicular to the wall and a "Hanger Beam" which is parallel with the wall.

Note:
1. L1 and L2 are customized based on different projects. Other dimensions are for standard products.
2. Fxation hangers are provided by the installation company as a Standard Practice. It is charged separately when supplied by the factory, according to the dimension provided.

Spring hanger (Vertical)

Spring hanger is used in each floor to support vertically installed busway's weight.

Spring hanger is connected with the busway by bolt.

Spring hangers have different spring quantities for different ampere rating busways. Please refer to table.29-1.

Accessories:
1. Spring supporter
2. Hex head bolt
3. Double-headed bolt
4. Spring
5. Cushion
6. Channel steel base

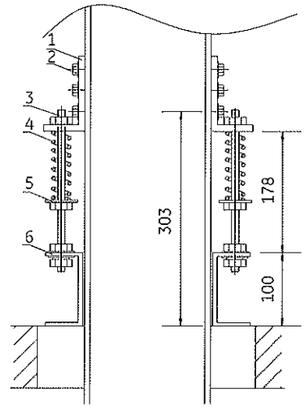

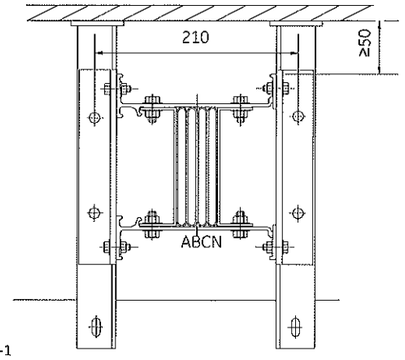

fig.29-1

Rated current (A)	Spring Qty
100-800	2
1000-2500	4
3150-5000	6

table.29-1

Note:
1. All dimensions are in mm.
2. All dimensions provided are for standard products. Please contact our engineers for customized products' dimensions.

Installation

Minimum clearance required for heat dissipation

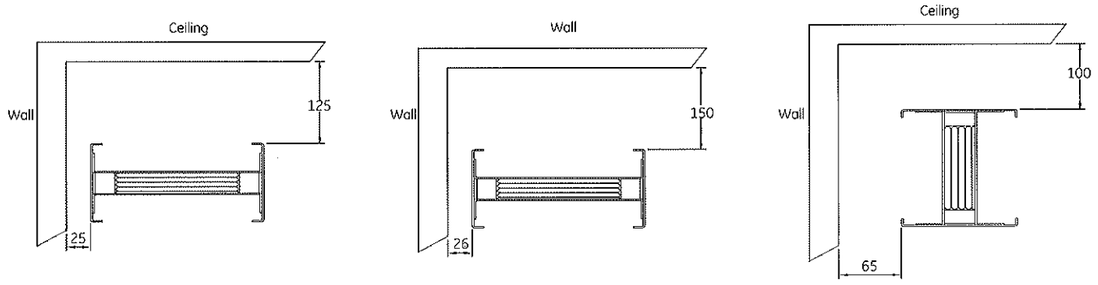

fig.30-1

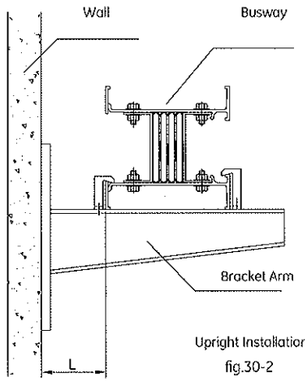

Upright Installation

fig.30-2

Minimum clearance required for Plug-in box installation

Installation of bus plug

When the busway is horizontally or vertically installed near the wall, a minimum clearance is required for Plug-in box installation. Pls refer to below table.34-1

Rated current of plugs (A)	100	250	400
L (mm)	150	195	210

table.30-1

Note:
1. All dimensions are in mm.
2. For IP65 application, busway shall be edgewise or vertically installed.

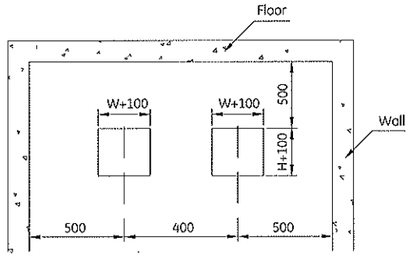

fig.30-3

Horizontal installation

Horizontal through-the-wall installation

For dimensions of through-the-wall installation, please refer to the left figure.

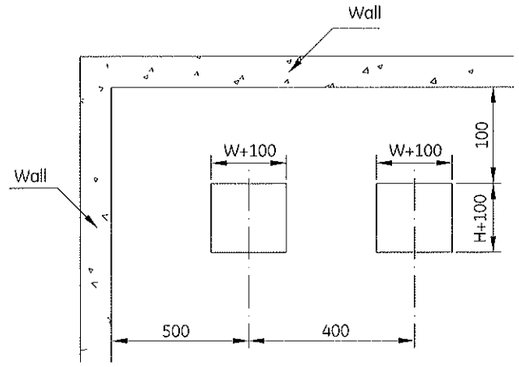

fig.31-1

Vertical installation

For installing vertical bus run, please refer to the fig.31-1 for dimension of cut holes. It shall be ensured that the spacing between every two runs of busway exceeds 400mm if there are two or more than two vertical runs of busway installed in the same riser.

Key points in Vertical installation

- In vertical installation, the distance between joint and ground should not be less than 0.56m, while distance between busway and wall backwards should be more than 0.1m
- Busway installed in riser should be reinforced in the center (generally when the space between floors exceed 4m or according to the user's special requirements)
- In vertical installation, spring bracket should be installed first and then busway, together with the spring bracket, can be fixed on the channel steel bed. Switch the spring to adjust the nut so that bracket spring can naturally bear the weight of busway
- The central distance between two neighbor vertical busways should be more than 0.4m. If have the special situation, please contact with project engineer

Ordering Information

WavePro LT purchase guide

The following information should be noted in building construction drawings and busway arrangement drawings:

- Model, rated current, rated voltage
- Plug-in busway or feeder busway
- Characteristics of the power supply and protection degree
- All fittings' installation locations and the dimension limits
- Power connecting method
- Surface treatment and color and accessories
- Name, model, specifications, quantity of components and protection degree of the plug

WavePro LT busway quotation inquiry form

Item	Details										
Conduct type	☐ Copper ☐ Aluminium										
Rated capacity	☐ 100A ☐ 160A ☐ 200A ☐ 250A ☐ 400A ☐ 500A ☐ 630A ☐ 800A ☐ 1000A ☐ 1250A ☐ 1600A ☐ 2000A ☐ 2500A ☐ 3150A ☐ 3800A ☐ 4000A ☐ 4500A ☐ 5000A										
Number of phase and wire	☐ 3L+50% Housing ground ☐ 3L+100%N+50% Internal ground ☐ 3L+200%N+50% Internal ground					☐ 3L+100%N+50% Housing ground ☐ 3L+200%N+50% Housing ground					
Phase sequence and color	☐ Option 1	☐ Option 2	☐ Option 4	☐ Option 6	☐ Option 7						
Frequency	☐ 50Hz					☐ 60Hz					
Voltage	☐ 415V					☐ 690V					
Certification	☐ IEC					☐ Others (consult the manufacturer in advance)					
Degree of protection	☐ IP40	☐ IP42	☐ IP54	☐ IP65	☐ Others						
Short withstand current@1s	☐ 10kA	☐ 20kA	☐ 30kA	☐ 50kA	☐ 65kA	☐ 80kA	☐ 100kA				
Color	☐ GE Standard Grey (RAL7000)	☐ RAL9001	☐ Others (please specify)								
Model	☐ Plug-in busway: _____meter (s)					☐ Feed-in busway: _____meter (s)					
Number of Plug Outlets	☐ 1	☐ 2	☐ 3	☐ 4	☐ One side	☐ Both side					
Accessories	☐ L type horizontal elbow (inside N phase), Qnty: _____ ☐ L type vertical elbow (above N phase), Qnty: _____ ☐ T type horizontal elbow (inside N phase), Qnty: _____ ☐ T type vertical elbow (above N phase), Qnty: _____ ☐ Terminal, quantity: _____ ☐ Flanged end, quantity: _____ ☐ Reducer, quantity: _____ ☐ Expansion length, quantity: _____ ☐ Transposition length, quantity: _____					☐ L type horizontal elbow (outside N phase), Qnty: _____ ☐ L type vertical elbow (under N phase), Qnty: _____ ☐ T type horizontal elbow (outside N phase), Qnty: _____ ☐ T type vertical elbow (under N phase), Qnty: _____					
Plug	☐ MCCB ☐ Others ☐ Rotary handle operation ☐ Manual operation										
	Rated current	___A, quantity: ___ ___A, quantity: ___ ___A, quantity: ___ ___A, quantity: ___ ___A, quantity: ___ ___A, quantity: ___ ___A, quantity: ___ ___A, quantity: ___ ___A, quantity: ___ ___A, quantity: ___ ___A, quantity: ___ ___A, quantity: ___										
	Short-circuit current	___A									
Installation Hanger	☐ Horizontal, quantity: _____					☐ Vertical, quantity: _____					
Delivery date											
Mode of shipping											
Packaging requirement											
Address of destination											
Contact Person Info.											
Contact											
Special requirement											

table.32-1

Busway Phase Sequence and Color

Option 1

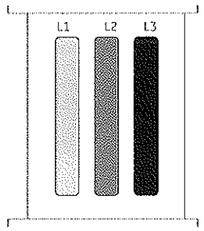

3L+50%Housing ground

Option 2

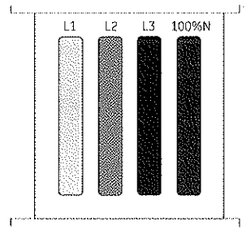

3L+100%N+50% Housing ground

Option 4

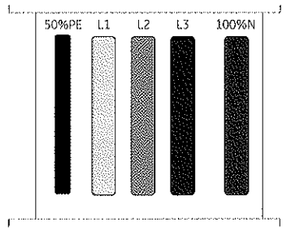

3L+100%N+50% Internal ground

Option 6

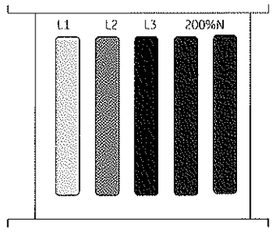

3L+200%N+50% Housing ground

Option 7

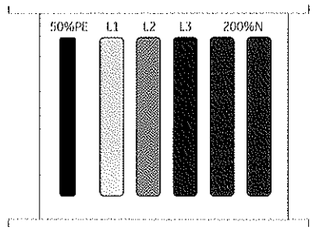

3L+200%N+50% Internal ground

Note: The phase sequence identifies L1, L2, L3, equivalent to A, B, C.

WavePro LT Catalogues

Lengths and fittings

WT	B	FD	EL	1	00	C	40	B
WavePro LT	Busway	FD: Feeder & Fittings Pn: Plug-in Busway (with n outlet)		Service: 1: 3L+50%Housing PE 2: 3L+N+50%Housing PE 4: 3L+N+50%Internal PE 6: 3L+2N+50%Housing PE 7: 3L+2N+50%Internal PE	00: 100A 01: 160A 02: 200A 03: 250A 04: 400A 05: 500A 06: 630A 08: 800A 10: 1000A 12: 1250A 13: 1350A 16: 1600A 20: 2000A 25: 2500A 32: 3150A 38: 3800A 40: 4000A 45: 4500A 50: 5000A	Conductor C: Copper A: Aluminum	40: IP40 42: IP42 54: IP54 65: IP65	--: 50Hz B: 60Hz*

CSLN: Straight Length
CFEN: Flanged End
EL: Elbow
ZL: Offset
TE: Tee
CL: Cross
TREN: Reducer
ELNN: Expansion unit
TPLN: Transposition Length
JONT: Joint
OTLT: Outlet
CTCN: Terminal Cover

EL:	**Elbow**	
	LEIN:	Edgewise (N inboard)
	LEON:	Edgewise (N outboard)
	LFNN:	Flatwise
ZL:	**Offset**	
	ZENN:	Edgewise
	ZFUN:	Flatwise (N phase Up)
	ZFDN:	Flatwise (N phase Down)
TE:	**Tee**	
	TEIN:	Edgewise Tee (N inboard)
	TEON:	Edgewise Tee (N outboard)
	TFNN:	Flatwise Tee
CL:	**Cross**	
	CFNN:	Flatwise Cross
	CENN:	Edgewise Cross

Samples:

1. IP54, 2000A Feeder Busway, 3L+100%N+50% Housing PE, Copper Conductor: WTBFDCSLN320C54
2. IP54, 4000A Elbow, 3L+100%N+50% Housing PE, Aluminum Conductor: WTBFDEL340A54
3. Copper Busway Outlet: WTBFDOTLTC; Aluminum Busway Outlet: WTBFDOTLTA

Note: For 60Hz product, please contact GE sales engineer for detail.

Busway plugs

WT	P	R	3P	10	40	FEN	S
WavePro LT	Plugs	M: Manual Mechanism R: Rotary Mechanism	3P: 3 Poles Breaker with Neutral Line 4P: 4 poles breaker with 4 trips	02: 25A 03: 32A 04: 40A 05: 50A 06: 63A 08: 80A 10: 100A 13: 125A 16: 160A 20: 200A 25: 250A 32: 315A 40: 400A	40: IP40 42: IP42 54: IP54	Breaker: FDN FEN FGN FEH FGH	-: w/o Shunt Trip S: with Shunt Trip

Accessories

WT	A	SPHR	08
WavePro LT	Accessory	ETB: End Tap Box SPHR: Spring Hanger HE: Edgewise Hanger HF: Flatwise Hanger HX: Fixed Hanger HPP: Press Plate - Flatwise VPP: Press Plate - Edgewise FLC: Flex Connection CNB: Connecting Bar JSH: Joint Cover WF: Wall Flange OTH: Others	00: End Tap Box 03: 100~250A 04: 400A 05: 500A 06: 630A 08: 800A 10: 1000A 12: 1250A 13: 1350A 16: 1600A 20: 2000A 25: 2500A 32: 3150A 38: 3800A 40: 4000A 45: 4500A 50: 5000A

Information provided is subjected to change without notice. Please verify all details with GE.