



Schindler 9300 AE

When a world of options provides the best choice.

Schindler Escalators and Moving Walks

Schindler

Schindler 9300 AE moving up to a new level.

The world's best-selling commercial escalator
The sleek and stylish Schindler 9300 Advanced Edition escalators are the latest development from Schindler's award-winning Escalator Competence Center in Vienna, Austria. Tailored to suit the exacting requirements of the Asia Pacific region, every detail reflects the Schindler design philosophy of safety, quality and style.

The Schindler 9300 AE is designed, engineered and built to provide high flexibility to meet customer needs both in commercial applications and in public transportation. Combining outstanding performance and durability, the Schindler 9300 AE provides fully individualized solutions that can meet the highest levels of aesthetic design and allow outdoor operation in virtually any climate.

When it comes to planning the layout of your escalators, the Schindler 9300 AE can help you achieve the best solution. SchindlerDraw is a fast, efficient and powerful online tool that saves hours of time on scaled layouts, traffic analyses and 3-D layouts – a unique tool in the escalator industry.



Core benefits

Built to the highest standards of excellence, the new Schindler 9300 AE maximizes your design and transportation potential, thanks to a wide choice of finishes and options. The new generation builds on Schindler's proven standards of safety, quality and style.

Safety
No margin for error. All Schindler 9300 AE escalators comply with all local and international safety standards, including EN 115. Every unit comprises over twenty important safety features and numerous options are available to further enhance the level of safety.

Quality
All Schindler 9300 AE units are pre-engineered using cutting-edge technology components to provide the highest levels of quality and reliability. Part of an integrated worldwide manufacturing network, all Schindler plants and processes are fully ISO certified.

Style
With Schindler 9300 AE, fully individualized solutions can be configured to achieve the highest levels of aesthetic design. An exceptionally wide choice of materials, colors and finishes is available for harmonization with any architectural design concept.



Safety & quality

Schindler's global-scale commitment to passenger safety never wavers: Schindler 9300 Advanced Edition escalators satisfy the same strict safety criteria from continent to continent. What's more, Schindler redefines industry standards. Every one of our units includes more than twenty important safety features – made possible thanks to Schindler's high-grade components and dependable system engineering.

– An additional safeguard against accidents on crowded escalators is the Schindler band brake. No other brake on the market matches its reliability and long service life. The braking torque is automatically adapted to the direction of travel. Its reduction to one third during the ascent slows down the braking effect.
– Continuous step axles linking the two step chains enhance safety by absorbing the bending stresses of the step band.
– Brushes keep children's fingers away from the handrail entry area, which is also equipped with a safety contact to shut down the unit.







Every Schindler escalator offers the highest level of safety

– Doubling your assurance of security through dual processor control is our advanced MICONIC F4, which oversees the operation of your escalator. Two independent microprocessors, "master" and "slave," cross-reference with each other to keep tabs on all operating parameters.
– User safety is maximized by a unique skirt design that offers optimal protection against wedging. The skirting is rigidly reinforced with C-rails on the back and is provided with anti-friction coating on the front to prevent shoes and other foreign objects from becoming trapped between the steps and the skirt panels. Well-designed optional skirt brushes further reduce the risk of wedging. Schindler skirting has proved its durability and easy maintenance in many existing installations.
– Schindler's unique step guiding system further decreases the risk of wedging by ensuring that the distance between the skirting and the step is consistently kept to a minimum.

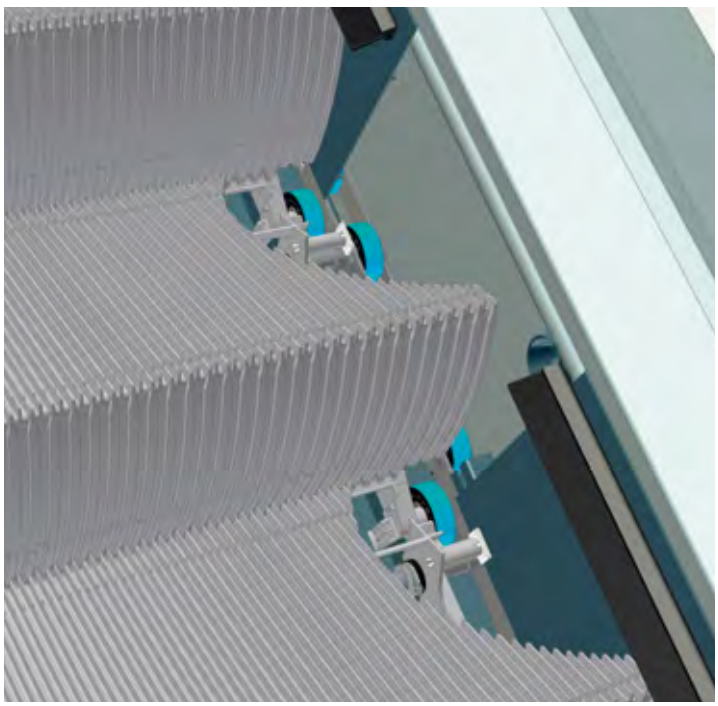

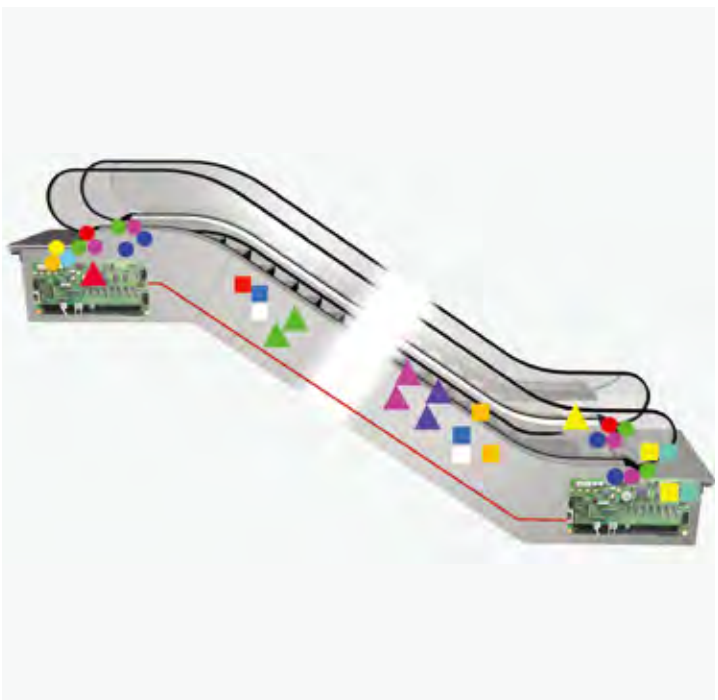

Design versatility

From the structural elements to the materials, finishes and colors, an extensive range of standard variants and options ensures the aesthetic harmonization of a Schindler 9300 Advanced Edition escalator with any architectural interior.

For an escalator to look its best, you have to get four visible key elements right: the balustrade; the steps and floor covers; the claddings; and the lighting features.

The balustrade
The slim, transparent balustrade design of the Schindler 9300 Advanced Edition is marked by classic grace. The stainless steel balustrade profile provides maximum durability. The 10-mm safety glass panels come in a variety of colors.

Designed to suit different environments, the Schindler 9300 AE offers optional design F and I balustrades with an aluminum profile and stainless steel panels respectively.

Lighting
Sophisticated lighting options add substantial visual impact and reduce the risk of trapping. Durable, vandal-resistant "LED" skirt lighting uses light-emitting diode technology to eyecatching effect. "Neon" skirt lighting accentuates the line of the escalator, and the overall visibility of the steps increases safety. Standardized soffit lighting creates focal points with halogen spots. With
the optional design F balustrade, cold-cathode lighting can be integrated into the powder-coated profile.


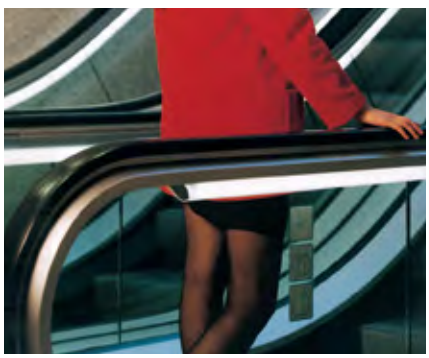



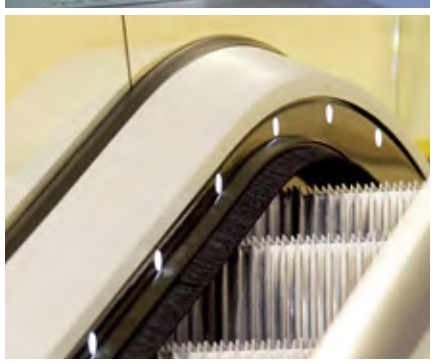

Steps
Defying industry trends, Schindler manufactures the step as core component in-house in order to guarantee a high level of safety and design. The Schindler 9300 AE package features aluminum compact steps, which can be powder-coated in silver, black or other colors.

Claddings
Attractive claddings and deckings are crucial to creating a positive impression. Available in scratch-resistant, powder-coated aluminum or brushed stainless steel, our deckings are as good-looking as they are robust. Cladding materials range from sheet steel to glass.

Schindler further broadens your design choices by including innovative solutions for colored claddings, deckings, handrails and newel end caps.



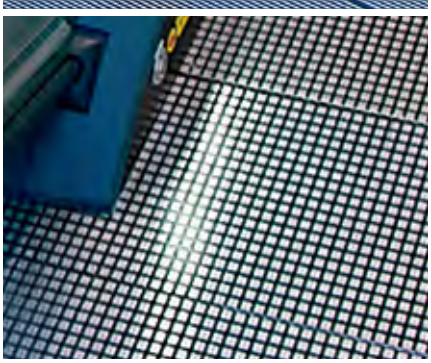



Efficiency

If the name of the game is efficiency, Schindler 9300 Advanced Edition escalators easily fulfill the highest expectations. Every feature is designed to meet the need for quiet, cost-effective operation.

– Exceptionally quiet running is a result of Schindler's industry-unique combination of a 6-pole motor with the Schindler reduction gear. This low-speed motor produces significantly less noise than a 4-pole motor.

Whatever your energy goals,
Schindler helps you achieve them

– All new installations have remote monitoring capability to determine the operating state round the clock. In the event of a stoppage, immediate diagnosis enables fast response and return to service.
- To keep energy costs down, every Schindler 9300 Advanced Edition escalator has an optimized drive system that is perfectly matched to the demands of the rise. Nominal motor power drops by as much as 27% compared with earlier escalator models.

– With Schindler you have a choice of three optional energy-saving packages. Schindler's ECO energy-saving system for higher rises, starting current reduction and soft start/soft stop functionality are all included in the ECOLINE Competence package and can generate energy savings of up to 20%. ECOLINE Plus provides for stop-&-go operation when passenger flow is discontinuous. ECOLINE Premium offers the advantages of crawling speed and peak current reduction thanks to a built-in frequency converter.

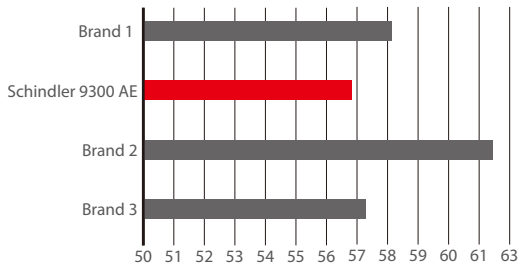

The Schindler 9300 AE is quieter in operation than other leading commercial escalator brands

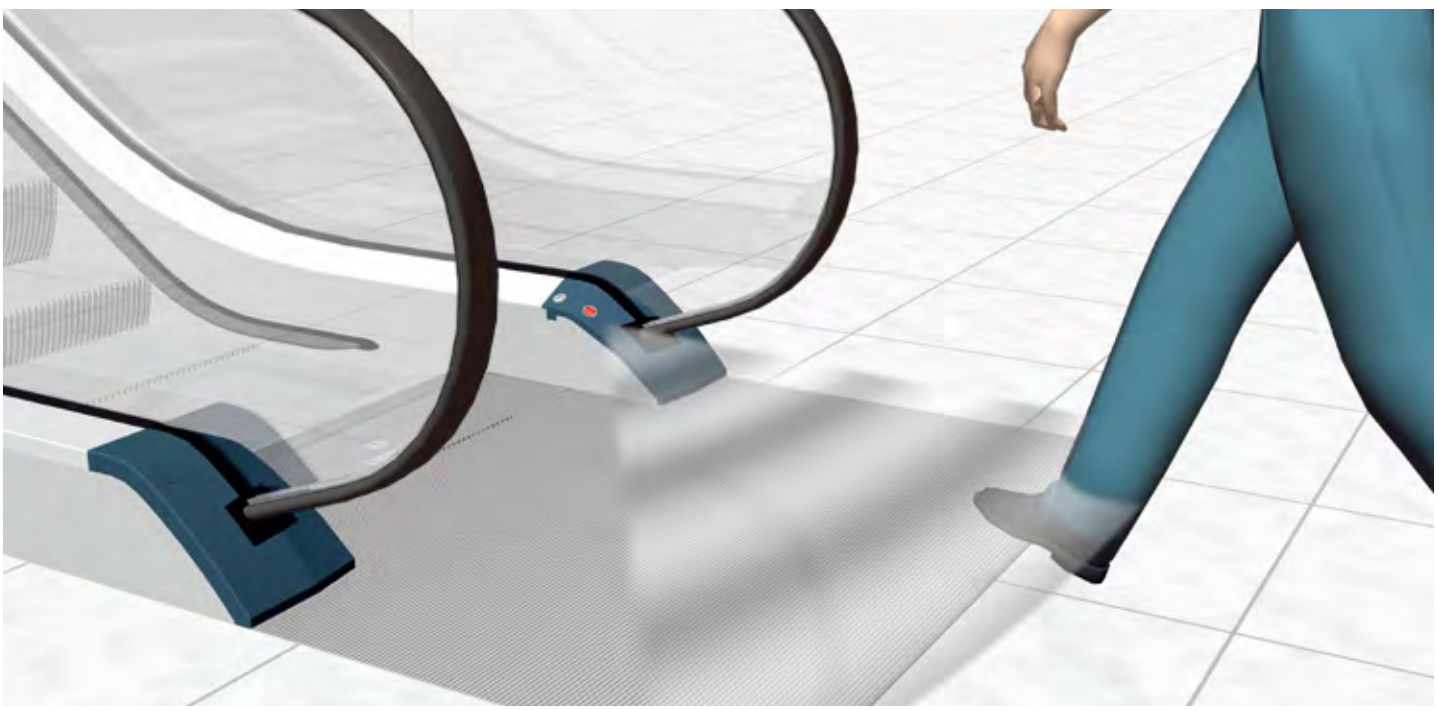

Value-added tools

Design your own escalator – online
SchindlerDraw is a fast, efficient and powerful tool that saves hours of drawing time on scaled layouts. Based on ready-to-use specifications, it is an indispensable planning aid, tailoring drawings to each individual project.

New features and functions –
now with 3-D
SchindlerDraw is an automated interactive CAD program for Schindler escalators. This unique service was first launched by Schindler in 1995 and has become an industry benchmark.
New features include:

- On-screen pdf drawing – print and download immediately
- AutoCAD drawings
- 3-D layout visualizations
- Traffic analysis
- Escalator specifications ready for tender documents

How
As the program is accessed online free of charge, there's no software to download. Simply log
in to SchindlerDraw, register, then click to open the Escalator Project Center, your own personal work center for creating, saving, opening or downloading escalator drawings.

www.schindlerdraw.com



Interrupted arrangement maximizes revenue



Parallel arrangement for heavy traffic volumes



Crisscross arrangement minimizes transportation time



Maintenance

Around the clock, around the region
Every day throughout the Asia Pacific region, over 100 million people travel using lifts, escalators and moving walks, installed, maintained and modernized by the Jardine Schindler Group.

Following the installation and handover of your Schindler 9300 AE escalators, our experienced and highly trained maintenance professionals will keep your escalators running
at optimum efficiency.



Schindler 9300 Advanced Edition
Type 10, 30° - K

Rise:	max. 6 m at a step width of 1000 mm	Inclination:	30°
Balustrade:	design E	Step width:	600/800/1000 mm
Balustrade height:	900/1000 mm	Step run:	2 horizontal steps

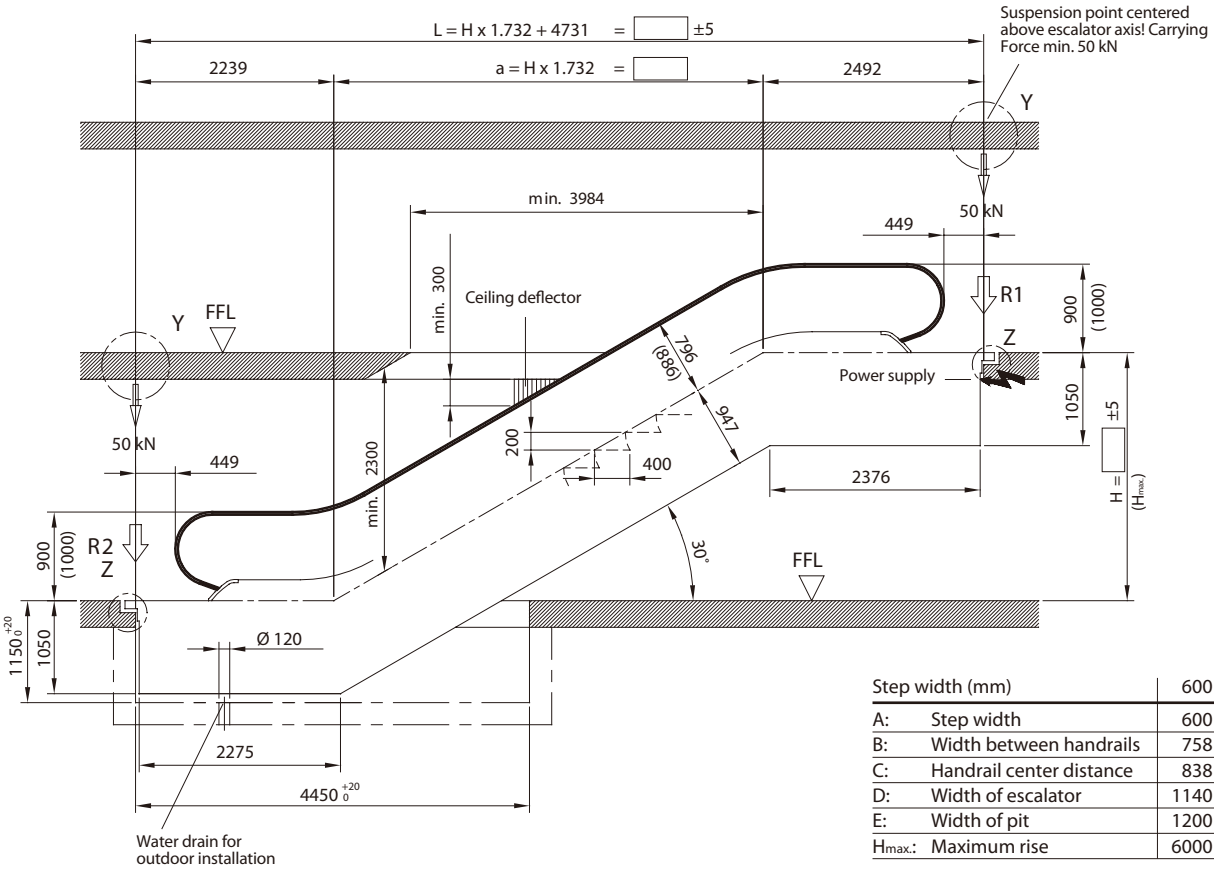

Step width (mm)		600	800	1000
A:	Step width	600	800	1000
B:	Width between handrails	758	958	1158
C:	Handrail center distance	838	1038	1238
D:	Width of escalator	1140	1340	1540
E:	Width of pit	1200	1400	1600
Hmax.:	Maximum rise	6000	6000	6000

Transportation dimensions

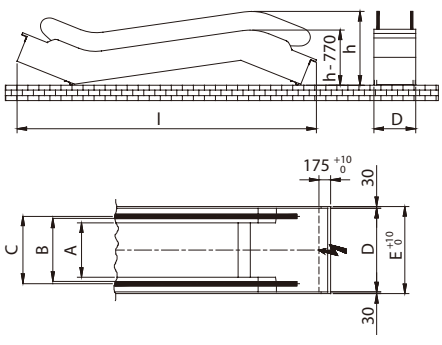

Detail Z

Gaps at joints to be filled with joint filler (by customer)

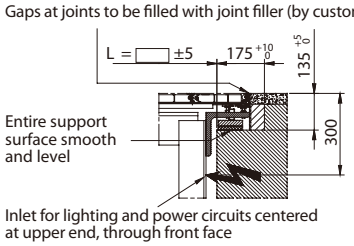

Step width A mm	Rise H mm	Weight kN	Support loads Cladding load 120N/m² R1 kN	Support loads Cladding load 120N/m² R2 kN	Transp.dimensions Balustrade height 900 h	Transp.dimensions Balustrade height 900 l
600	3000	52	44	38	2740	10860
	3500	56	47	41	2760	11850
	4000	59	50	44	2780	12840
	4500	62	53	47	2800	13840
	5000	65	56	50	2820	14830
	5500	69	58	53	2830	15830
	6000	72	61	56	2840	16820
800	3000	55	50	45	2740	10860
	3500	59	54	48	2760	11850
	4000	62	57	52	2780	12840
	4500	66	61	55	2800	13840
	5000	69	64	58	2820	14830
	5500	73	68	62	2830	15830
	6000	76	71	65	2840	16820
1000	3000	59	57	51	2740	10860
	3500	62	61	55	2760	11850
	4000	66	65	59	2780	12840
	4500	70	69	63	2800	13840
	5000	73	73	67	2820	14830
	5500	85	82	74	2830	15830
	6000	89	86	79	2840	16820

All dimensions in mm. Truss dimensions exclude truss cladding.
Observe national regulations! Subject to changes.

Schindler 9300 Advanced Edition
Type 10, 30° - M

Rise:	max. 7.5 m at a step width of 1000 mm	Inclination:	30°
Balustrade:	design E	Step width:	600/800/1000 mm
Balustrade height:	900/1000 mm	Step run:	3 horizontal steps

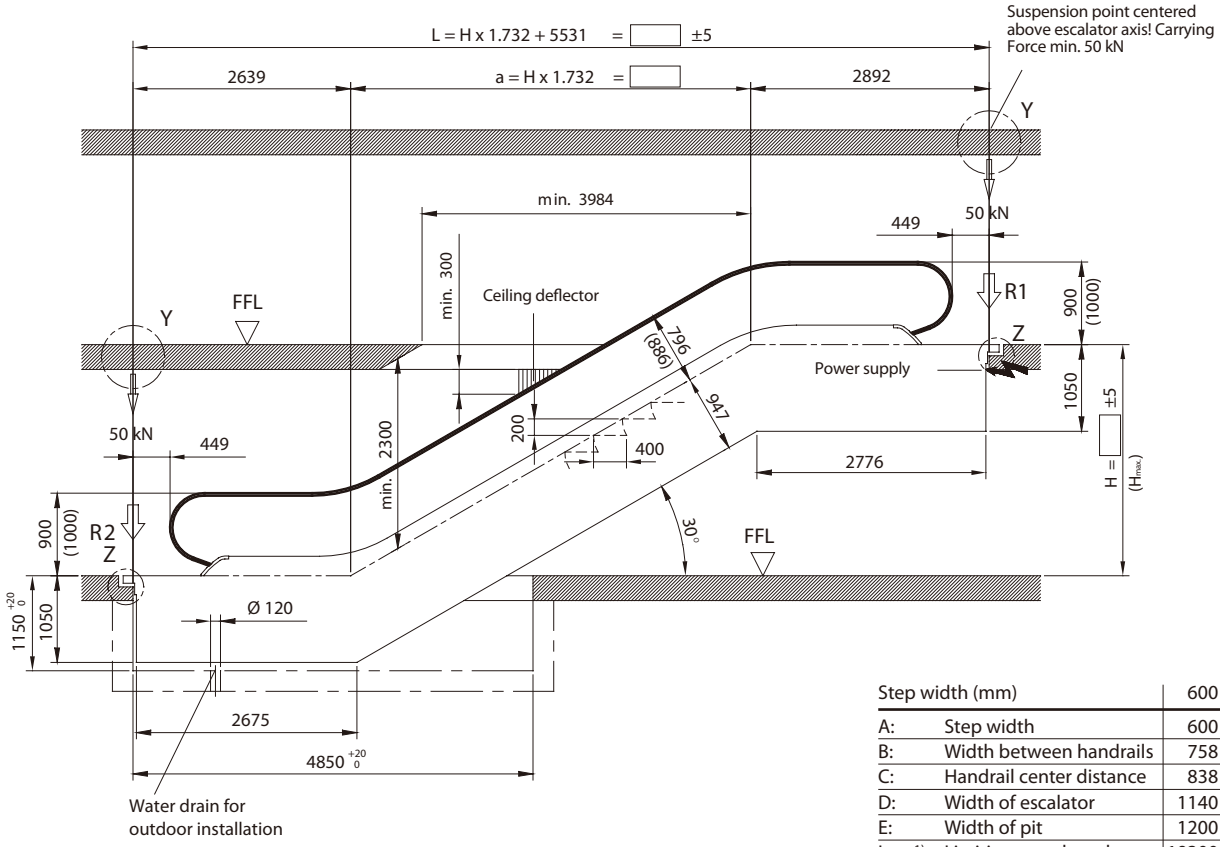

Step width (mm)		600	800	1000
A:	Step width	600	800	1000
B:	Width between handrails	758	958	1158
C:	Handrail center distance	838	1038	1238
D:	Width of escalator	1140	1340	1540
E:	Width of pit	1200	1400	1600
$L_{max.}$ [1]:	Limiting span length	19300	17600	16200
$H_{max.}$:	Maximum rise	12000	9300	7500

Transportation dimensions

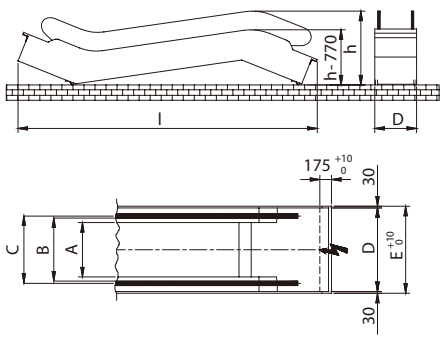

Step width	Rise	Weight	Support loads Cladding load 120N/m²		Transp.dimensions Balustrade height 900	
			R1	R2		
A mm	H mm	kN	kN	kN	h	l
600	3000	58	48	42	2850	11610
	3500	61	51	45	2880	12590
	4000	65	54	48	2910	13580
	4500	68	57	51	2930	14570
	5000	72	60	54	2950	15570
	5500	75	63	57	2970	16560
	6000	78	66	60	[2]	[2]
800	3000	61	55	49	2850	11610
	3500	65	58	53	2880	12590
	4000	68	62	56	2910	13580
	4500	72	65	60	2930	14570
	5000	76	69	63	2950	15570
	5500	82	74	68	2970	16560
	6000	86	78	72	[2]	[2]
1000	3000	65	62	56	2850	11610
	3500	69	66	61	2880	12590
	4000	73	70	65	2910	13580
	4500	79	76	70	2930	14570
	5000	83	80	74	2950	15570
	5500	90	87	79	2970	16560
	6000	94	91	83	[2]	[2]

Detail Z

Gaps at joints to be filled with joint filler (by customer)

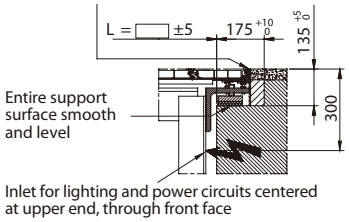

1) If L > $L_{max.}$, an intermediate support may be required; please consult Schindler.

2) Delivery in 2 parts.

All dimensions in mm. Truss dimensions exclude truss cladding.
Observe national regulations! Subject to changes.

Schindler 9300 Advanced Edition
Type 10, 35° - K

Rise:	max. 6 m at a step width of 1000 mm	Inclination:	35°
Balustrade:	design E	Step width:	600/800/1000 mm
Balustrade height:	900/1000 mm	Step run:	2 horizontal steps

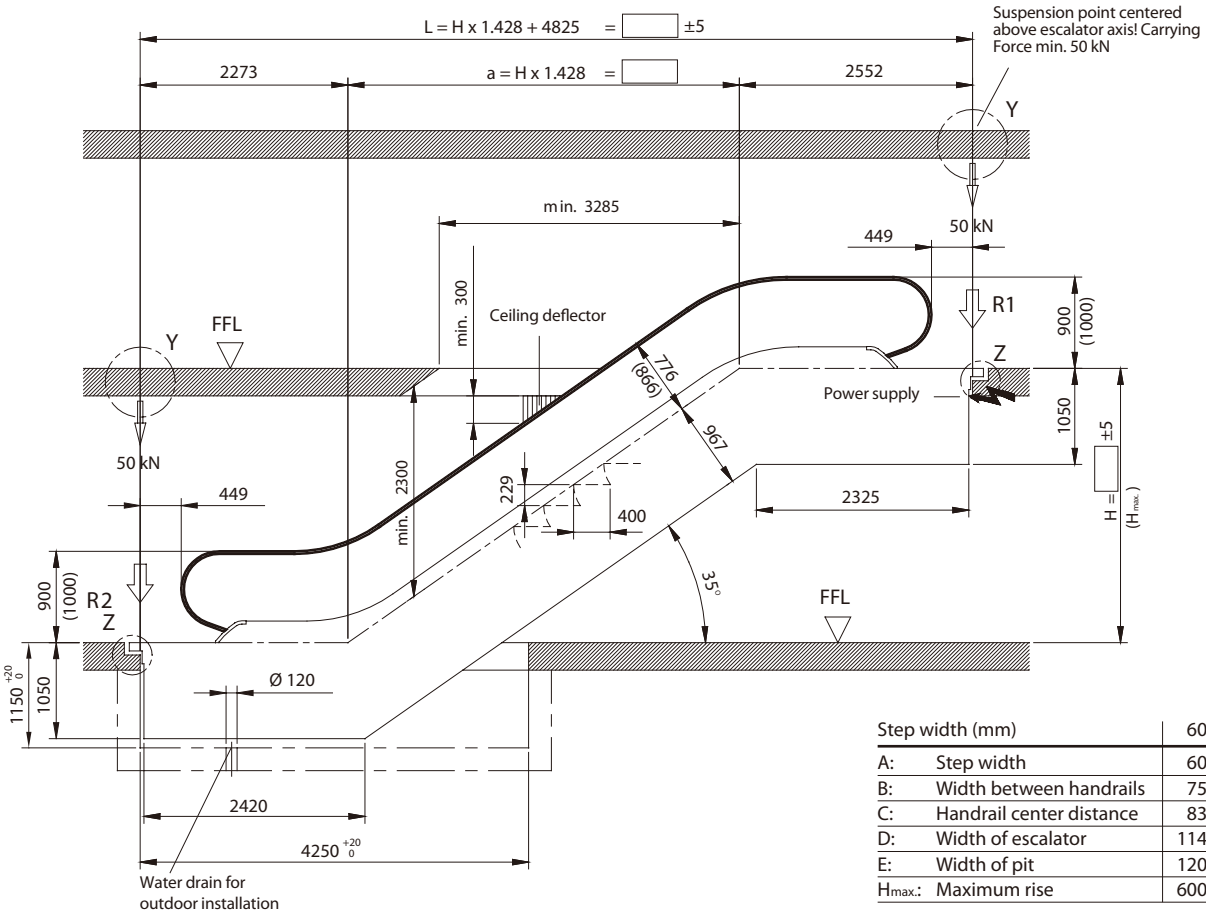

Step width (mm)		600	800	1000
A:	Step width	600	800	1000
B:	Width between handrails	758	958	1158
C:	Handrail center distance	838	1038	1238
D:	Width of escalator	1140	1340	1540
E:	Width of pit	1200	1400	1600
Hmax.:	Maximum rise	6000	6000	6000

Transportation dimensions

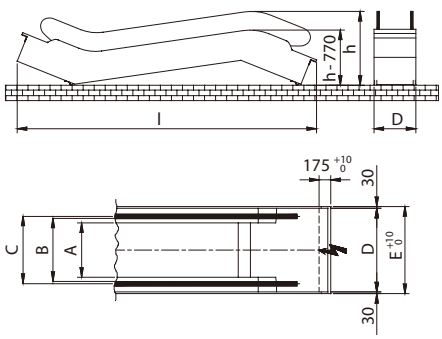

Detail Z

Gaps at joints to be filled with joint filler (by customer)

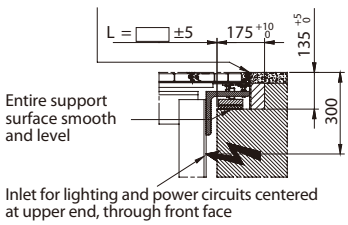

Step width A mm	Rise H mm	Weight kN	Support loads Cladding load 120N/m² R1 kN	Support loads Cladding load 120N/m² R2 kN	Transp.dimensions Balustrade height 900 h	Transp.dimensions Balustrade height 900 l
600	3000	49	41	35	2820	10110
	3500	52	44	38	2850	10960
	4000	55	46	40	2880	11820
	4500	58	49	43	2900	12680
	5000	60	51	45	2910	13540
	5500	63	53	48	2930	14400
	6000	66	56	50	2940	15270
800	3000	52	47	41	2820	10110
	3500	55	50	44	2850	10960
	4000	58	53	47	2880	11820
	4500	61	56	50	2900	12680
	5000	64	59	53	2910	13540
	5500	67	62	56	2930	14400
	6000	70	65	59	2940	15270
1000	3000	55	53	47	2820	10110
	3500	58	57	51	2850	10960
	4000	62	60	54	2880	11820
	4500	65	63	58	2900	12680
	5000	68	67	61	2910	13540
	5500	71	70	64	2930	14400
	6000	83	79	71	2940	15270

All dimensions in mm. Truss dimensions exclude truss cladding.
Observe national regulations! Subject to changes.

We are always close by.

Please contact one of the following addresses:

Brunei
Schindler Liftec Sdn. Bhd.
Unit B8, 1st Floor, Kompleks Setia Kenangan
Kg. Kiulap, Mukim Gadong
Bandar Seri Begawan BE 1518
Negara Brunei Darussalam
Telephone + 673 2 236 515
+ 673 2 236 516
Fax + 673 2 236 470
info@bn.schindler.com

Cambodia
Jardine Schindler (Cambodia) Ltd.
No. 315, Monivong Blvd, 22nd Floor, Canadia Tower
Phnom Penh, Kingdom of Cambodia
Telephone + 855 23 431 013
Fax + 855 23 431 014
info@kh.schindler.com

Hong Kong
Schindler Lifts (Hong Kong) Ltd.
29th Floor, Devon House, Taikoo Place, 979 King's Road
Quarry Bay, Hong Kong
Telephone + 852 2516 8168
Fax + 852 2516 6026
info@hk.schindler.com

Indonesia
P.T. Berca Schindler Lifts
Menara Rajawali
2nd Floor, Jl Mega Kuningan Lot 5.1
Kawasan Mega Kuningan
12950 Jakarta, Indonesia
Telephone + 62 21 576 1476
+ 62 21 576 1582
+ 62 21 576 3338
Fax + 62 21 576 1844
info@id.schindler.com

Macau
Jardine Schindler Lifts (Macao) Ltd.
No. 398, Alameda Dr. Carlos
D Assumpcao Edificio CNAC
9-andar-G & H, Macau
Telephone + 853 2875 7953
Fax + 853 2883 7264
info@hk.schindler.com

Malaysia
Antah Schindler Sdn Bhd (3837-H)
7th & 8th Floor, Bangunan TH Uptown 3
No. 3 Jalan SS 21/39, Damansara Uptown
47400 Petaling Jaya, Selangor D Ehsan, Malaysia
Telephone + 60 3 7725 1818
Fax + 60 3 7725 1181
info@my.schindler.com

Myanmar
Myanmar Jardine Schindler Ltd.
15 (F), Than Ta Man Street, Dagon Township
Yangon, Myanmar
Telephone + 95 1 226 930
+ 95 1 228 376
Fax + 95 1 226 930
+ 95 1 228 376

Philippines
Jardine Schindler Elevator Corporation
8th Floor, Pacific Star Building, Corner Sen. Gil Puyat Avenue
and Makati Avenue, Makati City, Philippines
Telephone + 63 2 811 5438
Fax + 63 2 843 1419
info@ph.schindler.com
Website www.schindler.ph

Singapore
Schindler Lifts (Singapore) Pte. Ltd.
1 Kaki Bukit Place, Singapore 416179
Telephone + 65 6854 7888
Fax + 65 6846 2212
info@sg.schindler.com

Taiwan
Jardine Schindler Lifts Ltd.
9th Floor, 35 Kwang Fu South Road
Taipei 105, Taiwan, R.O.C.
Telephone + 886 2 2528 6626
Fax + 886 2 2528 6656
info@tw.schindler.com
Website www.schindler.tw

Thailand
Jardine Schindler (Thai) Ltd.
20th Floor, Times Square Building
246 Sukhumvit Road, Klongtoey, Bangkok 10110, Thailand
Telephone + 66 2 685 1600
Fax + 66 2 685 1601
info@th.schindler.com
Website www.schindler.co.th

Vietnam
Schindler Vietnam Ltd.
9th Floor, Star Building, 33ter-33bis Mac Dinh Chi Street
District 1, Ho Chi Minh City, Vietnam
Telephone + 84 8 3821 3383
+ 84 8 3821 3384
Fax + 84 8 3821 3382
info@vn.schindler.com
Website www.schindler.vn

Or visit our website:
www.jardineschindler.com

Disclaimer
The specifications, options and colors expressed within this brochure are indicative only and are subject to change without notice. They are not intended to, and do not, constitute an offer on the part of the Jardine Schindler Group.