Chapter D
MV & LV architecture selection guide

Contents

1 Stakes for the user D3

2 Simplified architecture design process D4
- 2.1 The architecture design D4
- 2.2 The whole process D5

3 Electrical installation characteristics D7
- 3.1 Activity D7
- 3.2 Site topology D7
- 3.3 Layout latitude D7
- 3.4 Service reliability D8
- 3.5 Maintainaility D8
- 3.6 Installation flexibility D8
- 3.7 Power demand D8
- 3.8 Load distribution D9
- 3.9 Power interruption sensitivity D9
- 3.10 Disturbance sensitivity D9
- 3.11 Disturbance capability of circuits D10
- 3.12 Other considerations or constraints D10

4 Technological characteristics D11
- 4.1 Environment, atmosphere D11
- 4.2 Service Index D11
- 4.3 Other considerations D12

5 Architecture assessment criteria D13
- 5.1 On-site work time D13
- 5.2 Environmental impact D13
- 5.3 Preventive maintenance level D13
- 5.4 Availability of electrical power supply D14

6 Choice of architecture fundamentals D15
- 6.1 Connection to the upstream network D15
- 6.2 MV circuit configuration D16
- 6.3 Number and distribution of MV/LV transformation substations D17
- 6.4 Number of MV/LV transformers D18
- 6.5 MV back-up generator D18

7 Choice of architecture details D19
- 7.1 Layout D19
- 7.2 Centralized or distributed layout D20
- 7.3 Presence of an Uninterruptible Power Supply (UPS) D22
- 7.4 Configuration of LV circuits D22

8 Choice of equiment D24

9 Recommendations for architecture optimization D26

9.1 On-site work time D26
9.2 Environmental impact D26
9.3 Preventive maintenance volume D28
9.4 Electrical power availability D28

10 Glossary D29

11 ID-Spec software D30

12 Example: electrical installation in a printworks D31

12.1 Brief description D31
12.2 Installation characteristics D31
12.3 Technological characteristics D31
12.4 Architecture assessment criteria D32
12.5 Choice of technogical solutions D34

1 Stakes for the user

Choice of distribution architecture

The choice of distribution architecture has a decisive impact on installation performance throughout its lifecycle:

- right from the construction phase, choices can greatly influence the installation time, possibilities of work rate, required competencies of installation teams, etc.
- there will also be an impact on performance during the operation phase in terms of quality and continuity of power supply to sensitive loads, power losses in power supply circuits,
- and lastly, there will be an impact on the proportion of the installation that can be recycled in the end-of-life phase.

The Electrical Distribution architecture of an installation involves the spatial configuration, the choice of power sources, the definition of different distribution levels, the single-line diagram and the choice of equipment.

The choice of the best architecture is often expressed in terms of seeking a compromise between the various performance criteria that interest the customer who will use the installation at different phases in its lifecycle. The earlier we search for solutions, the more optimization possibilities exist (see Fig. D1).

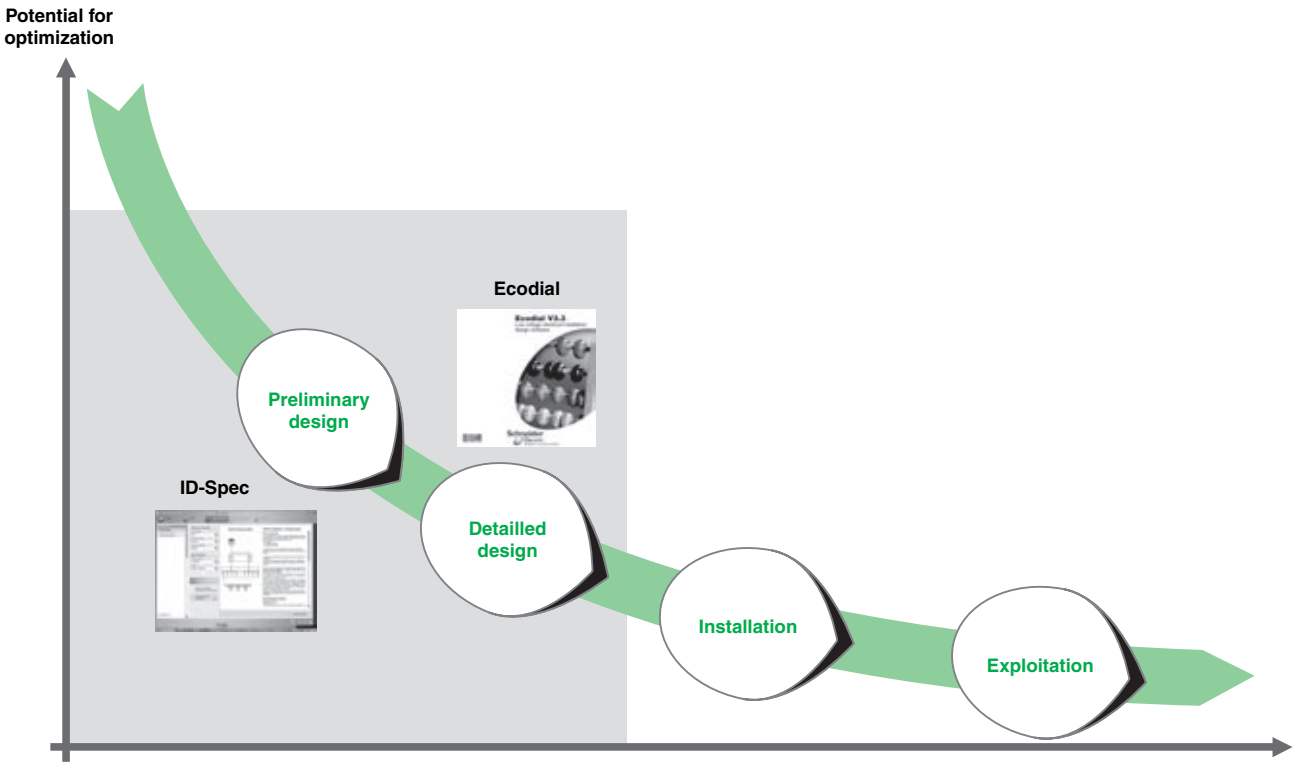

Fig. D1 : Optimization potential

A successful search for an optimal solution is also strongly linked to the ability for exchange between the various players involved in designing the various sections of a project:

- the architect who defines the organization of the building according to user requirements,
- the designers of different technical sections (lighting, heating, air conditioning, fluids, etc.),
- the user's representatives e.g. defining the process.

The following paragraphs present the selection criteria as well as the architecture design process to meet the project performance criteria in the context of industrial and tertiary buildings (excluding large sites).

2 Simplified architecture design process

2.1 The architecture design

The architecture design considered in this document is positioned at the Draft Design stage. It generally covers the levels of MV/LV main distribution, LV power distribution, and exceptionally the terminal distribution level. (see **Fig. D2**).

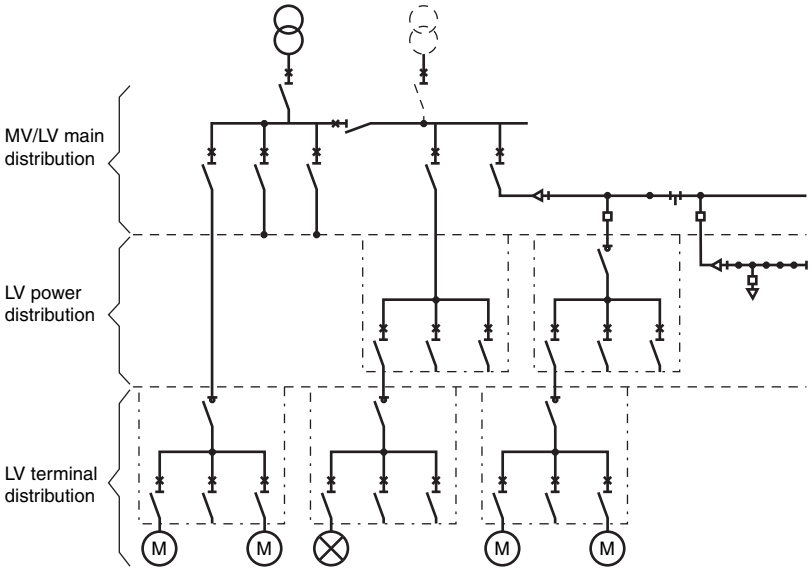

Fig. D2 *: Example of single-line diagram*

The design of an electrical distribution architecture can be described by a 3-stage process, with iterative possibilities. This process is based on taking account of the installation characteristics and criteria to be satisfied.

2 Simplified architecture design process

2.2 The whole process

The whole process is described briefly in the following paragraphs and illustrated on **Figure D3**.

The process described in this document is not intended as the only solution. This document is a guide intended for the use of electrical installation designers.

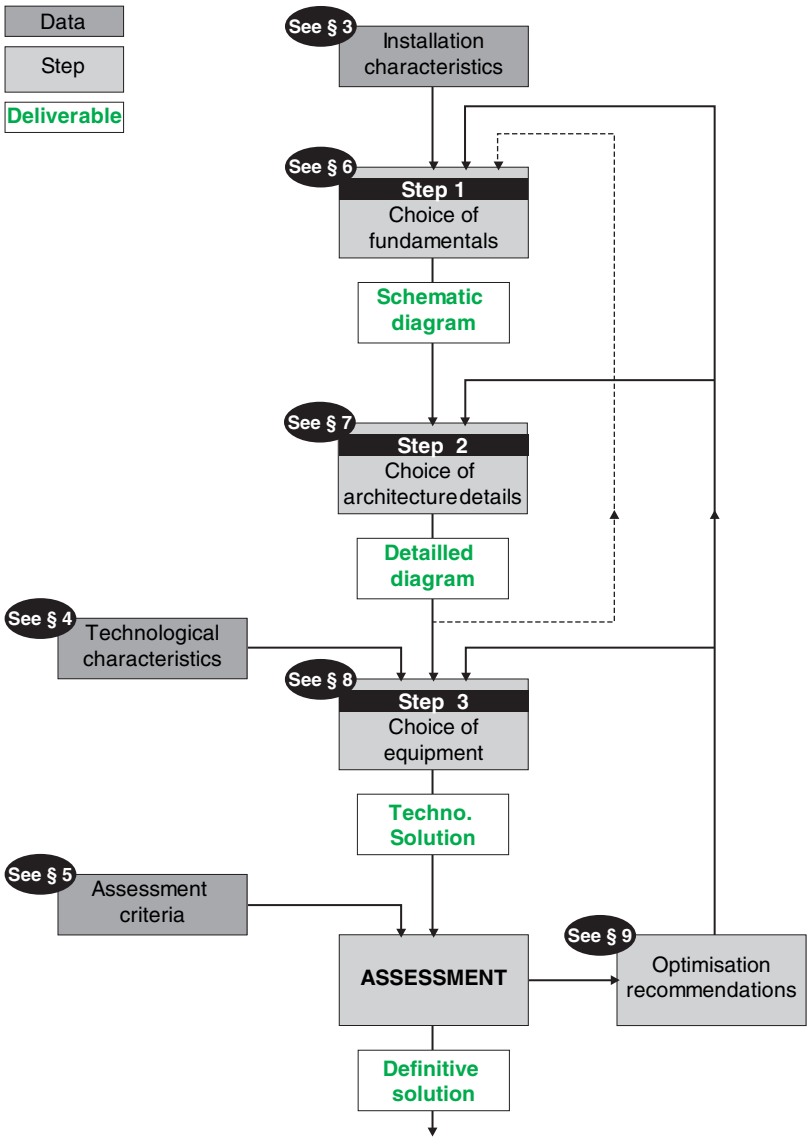

Fig. D3 : Flow diagram for choosing the electrical distribution architecture

Step 1: Choice of distribution architecture fundamentals

This involves defining the general features of the electrical installation. It is based on taking account of macroscopic characteristics concerning the installation and its usage.

These characteristics have an impact on the connection to the upstream network, MV circuits, the number of transformer substations, etc.

At the end of this step, we have several distribution schematic diagram solutions, which are used as a starting point for the single-line diagram. The definitive choice is confirmed at the end of the step 2.

2 Simplified architecture design process

Step 2: choice of architecture details

This involves defining the electrical installation in more detail. It is based on the results of the previous step, as well as on satisfying criteria relative to implementation and operation of the installation.
The process loops back into step1 if the criteria are not satisfied. An iterative process allows several assessment criteria combinations to be analyzed.
At the end of this step, we have a detailed single-line diagram.

Step 3: choice of equipment

The choice of equipment to be implemented is carried out in this stage, and results from the choice of architecture. The choices are made from the manufacturer catalogues, in order to satisfy certain criteria.
This stage is looped back into step 2 if the characteristics are not satisfied.

Assessment

This assessment step allows the Engineering Office to have figures as a basis for discussions with the customer and other players.
According to the result of these discussions, it may be possible to loop back into step 1.

3 Electrical installation characteristics

These are the main installation characteristics enabling the defining of the fundamentals and details of the electrical distribution architecture. For each of these characteristics, we supply a definition and the different categories or possible values.

3.1 Activity

Definition:

Main economic activity carried out on the site.

Indicative list of sectors considered for industrial buildings:

- Manufacturing
- Food & Beverage
- Logistics

Indicative list of sectors considered for tertiary buildings:

- Offices buildings
- Hypermarkets
- Shopping malls

3.2 Site topology

Definition:

Architectural characteristic of the building(s), taking account of the number of buildings, number of floors, and of the surface area of each floor.

Different categories:

- Single storey building,
- Multi-storey building,
- Multi-building site,
- High-rise building.

3.3 Layout latitude

Definition:

Characteristic taking account of constraints in terms of the layout of the electrical equipment in the building:

- aesthetics,
- accessibility,
- presence of dedicated locations,
- use of technical corridors (per floor),
- use of technical ducts (vertical).

Different categories:

- Low: the position of the electrical equipment is virtually imposed
- Medium: the position of the electrical equipment is partially imposed, to the detriment of the criteria to be satisfied
- High: no constraints. The position of the electrical equipment can be defined to best satisfy the criteria.

3 Electrical installation characteristics

3.4 Service reliability

Definition:

The ability of a power system to meet its supply function under stated conditions for a specified period of time.

Different categories:

- Minimum: this level of service reliability implies risk of interruptions related to constraints that are geographical (separate network, area distant from power production centers), technical (overhead line, poorly meshed system), or economic (insufficient maintenance, under-dimensioned generation).
- Standard
- Enhanced: this level of service reliability can be obtained by special measures taken to reduce the probability of interruption (underground network, strong meshing, etc.)

3.5 Maintainability

Definition:

Features input during design to limit the impact of maintenance actions on the operation of the whole or part of the installation.

Different categories:

- Minimum: the installation must be stopped to carry out maintenance operations.
- Standard: maintenance operations can be carried out during installation operations, but with deteriorated performance. These operations must be preferably scheduled during periods of low activity. Example: several transformers with partial redundancy and load shedding.
- Enhanced: special measures are taken to allow maintainance operations without disturbing the installation operations. Example: double-ended configuration.

3.6 Installation flexibility

Definition:

Possibility of easily moving electricity delivery points within the installation, or to easily increase the power supplied at certain points. Flexibility is a criterion which also appears due to the uncertainty of the building during the pre-project summary stage.

Different categories:

- No flexibility: the position of loads is fixed throughout the lifecycle, due to the high constraints related to the building construction or the high weight of the supplied process. E.g.: smelting works.
- Flexibility of design: the number of delivery points, the power of loads or their location are not precisely known.
- Implementation flexibility: the loads can be installed after the installation is commissioned.
- Operating flexibility: the position of loads will fluctuate, according to process re-organization.

Examples:

- industrial building: extension, splitting and changing usage
- office building: splitting

3 Electrical installation characteristics

3.7 Power demand

Definition:

The sum of the apparent load power (in kVA), to which is applied a usage coefficient. This represents the maximum power which can be consumed at a given time for the installation, with the possibility of limited overloads that are of short duration.

Significant power ranges correspond to the transformer power limits most commonly used:

- < 630kVA
- of 630 to 1250kVA
- of 1250 to 2500kVA
- > 2500kVA

3.8 Load distribution

Definition:

A characteristic related to the uniformity of load distribution (in kVA / m²) over an area or throughout the building.

Different categories:

- Uniform distribution: the loads are generally of an average or low unit power and spread throughout the surface area or over a large area of the building (uniform density).

E.g.: lighting, individual workstations

- intermediate distribution: the loads are generally of medium power, placed in groups over the whole building surface area

E.g.: machines for assembly, conveying, workstations, modular logistics “sites”

- localized loads: the loads are generally high power and localized in several areas of the building (non-uniform density).

E.g.: HVAC

3.9 Power Interruption Sensitivity

Definition:

The aptitude of a circuit to accept a power interruption.

Different categories:

- “Sheddable” circuit: possible to shut down at any time for an indefinite duration
- Long interruption acceptable: interruption time > 3 minutes *
- Short interruption acceptable: interruption time < 3 minutes *
- No interruption acceptable.

We can distinguish various levels of severity of an electrical power interruption, according to the possible consequences:

- No notable consequence,
- Loss of production,
- Deterioration of the production facilities or loss of sensitive data,
- Causing mortal danger.

This is expressed in terms of the criticality of supplying of loads or circuits.

- Non-critical:

The load or the circuit can be “shed” at any time. E.g.: sanitary water heating circuit.

- Low criticality:

A power interruption causes temporary discomfort for the occupants of a building, without any financial consequences. Prolonging of the interruption beyond the critical time can cause a loss of production or lower productivity. E.g.: heating, ventilation and air conditioning circuits (HVAC).

- Medium criticality

A power interruption causes a short break in process or service. Prolonging of the interruption beyond a critical time can cause a deterioration of the production facilities or a cost of starting for starting back up.

E.g.: refrigerated units, lifts.

- High criticality

Any power interruption causes mortal danger or unacceptable financial losses.

E.g.: operating theatre, IT department, security department.

* indicative value, supplied by standard EN50160: “Characteristics of the voltage supplied by public distribution networks”.

3 Electrical installation characteristics

3.10 Disturbance sensitivity

Definition

The ability of a circuit to work correctly in presence of an electrical power disturbance.

A disturbance can lead to varying degrees of malfunctioning. E.g.: stopping working, incorrect working, accelerated ageing, increase of losses, etc
Types of disturbances with an impact on circuit operations:
- brown-outs,
- overvoltages
- voltage distortion,
- voltage fluctuation,
- voltage imbalance.

Different categories:

- low sensitivy: disturbances in supply voltages have very little effect on operations.
E.g.: heating device.
- medium sensitivity: voltage disturbances cause a notable deterioration in operations.
E.g.: motors, lighting.
- high sensitivity: voltage disturbances can cause operation stoppages or even the deterioration of the supplied equipment.
E.g.: IT equipment.

The sensitivity of circuits to disturbances determines the design of shared or dedicated power circuits. Indeed it is better to separate “sensitive” loads from “disturbing” loads. E.g.: separating lighting circuits from motor supply circuits. This choice also depends on operating features. E.g.: separate power supply of lighting circuits to enable measurement of power consumption.

3.11 Disturbance capability of circuits

The ability of a circuit to disturb the operation of surrounding circuits due to phenomena such as: harmonics, in-rush current, imbalance, High Frequency currents, electromagnetic radiation, etc.

Different categories

- Non disturbing: no specific precaution to take
- moderate or occasional disturbance: separate power supply may be necessary in the presence of medium or high sensitivity circuits. E.g.: lighting circuit generating harmonic currents.
- Very disturbing: a dedicated power circuit or ways of attenuating disturbances are essential for the correct functioning of the installation. E.g.: electrical motor with a strong start-up current, welding equipment with fluctuating current.

3.12 Other considerations or constraints

- Environment
E.g.: lightning classification, sun exposure
- Specific rules
E.g.: hospitals, high rise buildings, etc.
- Rule of the Energy Distributor
Example: limits of connection power for LV, access to MV substation, etc
- Attachment loads
Loads attached to 2 independent circuits for reasons of redundancy.
- Designer experience
Consistency with previous designs or partial usage of previous designs, standardization of sub-assemblies, existence of an installed equipment base.
- Load power supply constraints
Voltage level (230V, 400V, 690V), voltage system (single-phase, three-phase with or without neutral, etc)

4 Technological characteristics

The technological solutions considered concern the various types of MV and LV equipment, as well as Busbar Trunking Systems .
The choice of technological solutions is made following the choice of single-line diagram and according to characteristics given below.

4.1 Environment, atmosphere

A notion taking account of all of the environmental constraints (average ambient temperature, altitude, humidity, corrosion, dust, impact, etc.) and bringing together protection indexes IP and IK.
Different categories:
- Standard: no particular environmental constraints
- Enhanced: severe environment, several environmental parameters generate important constraints for the installed equipment
- Specific: atypical environment, requiring special enhancements

4.2 Service Index

The service index (IS) is a value that allows us to characterize an LV switchboard according to user requirements in terms of operation, maintenance, and scalability.
The different index values are indicated in the following table (**Fig D4**):

	Operation	Maintenance	Upgrade
Level 1	IS = 1 • • Operation may lead to complete stoppage of the switchboard	IS = • 1 • Operation may lead to complete stoppage of the switchboard	IS = • • 1 Operation may lead to complete stoppage of the switchboard
Level 2	IS = 2 • • Operation may lead to stoppage of only the functional unit	IS = • 2 • Operation may lead to stoppage of only the functional unit, with work on connections	IS = • • 2 Operation may lead to stoppage of only the functional unit, with functional units provided for back-up
Level 3	IS = 3 • • Operation may lead to stoppage of the power of the functional unit only	IS = • 3 • Operation may lead to stoppage of only the functional unit, without work on connections	IS = • • 3 Operation may lead to stoppage of only the functional unit, with total freedom in terms of upgrade

Fig. D4 : Different index values

- Examples of an operation event: turning off a circuit-breaker, switching operation to energize/de-energize a machine
- Example of a maintenance operation: tightening connections
- Example of an upgrade operation: connecting an additional feeder

There are a limited number of relevant service indices (see **Fig. D5**)

IS	Operation	Maintenance	Upgrade
1 1 1	Switching off the whole switchboard	Working time > 1h, with total non-availability	Extension not planned
2 1 1	Individually switching off the functional unit and re-commissioning < 1h		
2 2 3		Working time between 1/4h and 1h, with work on connections	Possible adding of functional units without stopping the switchboard
2 3 2		Working time between 1/4h and 1h, without work on connections	Possible adding of functional units with stopping the switchboard
2 3 3			Possible adding of functional units without stopping the switchboard
3 3 2	Individually switching off the functional unit and re-commissioning < 1/4h		Possible adding of functional units with stopping the switchboard
3 3 3			Possible adding of functional units without stopping the switchboard

Fig. D5 : Relevant service indices (IS)

Correspondence between service index and other mechanical parameters (**Fig. D6**):

Service index IS	Protection index IP	Form	Functional Unit Withdrawability	Switchgear Withdrawability
1 1 1	2 X X	1	F F F	Fixed
2 1 1	2 X B	1	F F F	Fixed
2 2 3	2 X B	3b	W F D	Fixed
2 3 2	2 X B	3b	W F W	Withdrawable base
2 3 3	2 X B	3b	W F D	Fixed
3 3 2	2 X B	3b	W W W	Withdrawable cradle
3 3 3	2 X B	3b	W W W	Withdrawable cradle

Fig. D6 : Correspondence between service index and other mechanical parameters

- Definition of the protection index: see IEC 60529: “Degree of protection given by enclosures (IP code)”,
- Definitions of the form and withdrawability: see IEC 60439-1: “Low-voltage switchgear and controlgear assemblies; part 1: type-tested and partially type-tested assemblies”.

4.3 Other considerations

Other considerations have an impact on the choice of technological solutions:
- Designer experience,
- Consistency with past designs or the partial use of past designs,
- Standardization of sub-assemblies,
- The existence of an installed equipment base,
- Utilities requirements,
- Technical criteria: target power factor, backed-up load power, presence of harmonic generators…

These considerations should be taken into account during the detailed electrical definition phase following the draft design stage.

5 Architecture assessment criteria

Certain decisive criteria are assessed at the end of the 3 stages in defining architecture, in order to validate the architecture choice. These criteria are listed below with the different allocated levels of priority.

5.1 On-site work time

Time for implementing the electrical equipment on the site.

Different levels of priority:

- Secondary: the on-site work time can be extended, if this gives a reduction in overall installation costs,
- Special: the on-site work time must be minimized, without generating any significant excess cost,
- Critical: the on-site work time must be reduced as far as possible, imperatively, even if this generates a higher total installation cost,

5.2 Environmental impact

Taking into consideration environmental constraints in the installation design. This takes account of: consumption of natural resources, Joule losses (related to CO_2 emission), “recyclability” potential, throughout the installation’s lifecycle.

Different levels of priority:

- Non significant: environmental constraints are not given any special consideration,
- Minimal: the installation is designed with minimum regulatory requirements,
- Proactive: the installation is designed with a specific concern for protecting the environment. Excess cost is allowed in this situation. E.g.: using low-loss transformers.

The environmental impact of an installation will be determined according to the method carrying out an installation lifecycle analysis, in which we distinguish between the following 3 phases:

- manufacture,
- operation,
- end of life (dismantling, recycling).

In terms of environmental impact, 3 indicators (at least) can be taken into account and influenced by the design of an electrical installation. Although each lifecycle phase contributes to the three indicators, each of these indicators is mainly related to one phase in particular:

- consumption of natural resources mainly has an impact on the manufacturing phase,
- consumption of energy has an impact on the operation phase,
- “recycleability” potential has an impact on the end of life.

The following table details the contributing factors to the 3 environmental indicators (**Fig D7**).

Indicators	Contributors
Natural resources consumption	Mass and type of materials used
Power consumption	Joule losses at full load and no load
«Recyclability» potential	Mass and type of material used

Fig D7 : Contributing factors to the 3 environmental indicators

5.3 Preventive maintenance level

Definition:

Number of hours and sophistication of maintenance carried out during operations in conformity with manufacturer recommendations to ensure dependable operation of the installation and the maintaining of performance levels (avoiding failure: tripping, down time, etc).

Different categories:

- Standard: according to manufacturer recommendations.
- Enhanced: according to manufacturer recommendations, with a severe environment,
- Specific: specific maintenance plan, meeting high requirements for continuity of service, and requiring a high level of maintenance staff competency.

5.4 Availability of electrical power supply

Definition:

This is the probability that an electrical installation be capable of supplying quality power in conformity with the specifications of the equipment it is supplying. This is expressed by an availability level:

Availability (%) = (1 - MTTR/ MTBF) x 100

MTTR (Mean Time To Repair): the average time to make the electrical system once again operational following a failure (this includes detection of the reason for failure, its repair and re-commissioning),

MTBF (Mean Time Between Failure): measurement of the average time for which the electrical system is operational and therefore enables correct operation of the application.

The different availability categories can only be defined for a given type of installation. E.g.: hospitals, data centers.

Example of classification used in data centers:

Tier 1: the power supply and air conditioning are provided by one single channel, without redundancy, which allows availability of 99.671%,

Tier 2: the power supply and air conditioning are provided by one single channel, with redundancy, which allows availability of 99.741%,

Tier 3: the power supply and air conditioning are provided by several channels, with one single redundant channel, which allows availability of 99.982%,

Tier 4: the power supply and air conditioning are provided by several channels, with redundancy, which allows availability of 99.995%.

6 Choice of architecture fundamentals

The single-line diagram can be broken down into different key parts, which are determined throughout a process in 2 successive stages. During the first stage we make the following choices:
- connection to the utilities network,
- configuration of MV circuits,
- number of power transformers,
- number and distribution of transformation substations,
- MV back-up generator

6.1 Connection to the upstream network

The main configurations for possible connection are as follows (see **Fig. D8** for MV service):
- LV service,
- MV single-line service,
- MV ring-main service,
- MV duplicate supply service,
- MV duplicate supply service with double busbar.

Metering, protection, disconnection devices, located in the delivery substations are not represented on the following diagrams. They are often specific to each utilities company and do not have an influence on the choice of installation architecture.
For each connection, one single transformer is shown for simplification purposes, but in the practice, several transformers can be connected.
(MLVS: Main Low Voltage Switchboard)

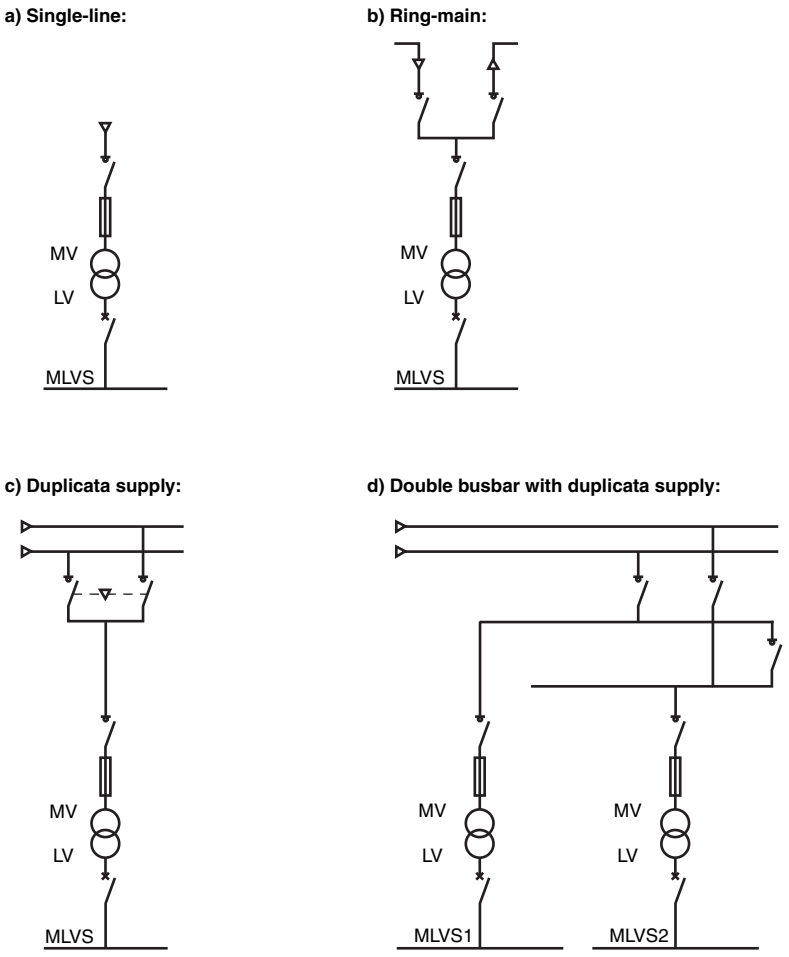

Fig. D8 : MV connection to the utilities network

6 Choice of architecture fundamentals

For the different possible configurations, the most probable and usual set of characteristics is given in the following table:

	Configuration				
	LV	MV			
Characteristic to consider		**Simple-line**	**Ring-main**	**Duplicate supply**	**Duplicate supply with double busbars**
Activity	Any	Any	Any	Hi-tech, sensitive office, health-care	Any
Site topology	Single building	Single building	Single building	Single building	Several buildings
Service reliability	Minimal	Minimal	Standard	Enhanced	Enhanced
Power demand	< 630kVA	≤ 1250kVA	≤ 2500kVA	> 2500kVA	> 2500kVA
Other connection constraints	Any	Isolated site	Low density urban area	High density urban area	Urban area with utility constraint

6.2 MV circuit configuration

The main possible connection configurations are as follows (**Fig. D9**):
- single feeder, one or several transformers
- open ring, one MV incomer
- open ring, 2 MV incomers

The basic configuration is a radial single-feeder architecture, with one single transformer.
In the case of using several transformers, no ring is realised unless all of the transformers are located in a same substation.
Closed-ring configuration is not taken into account.

a) Single feeder:

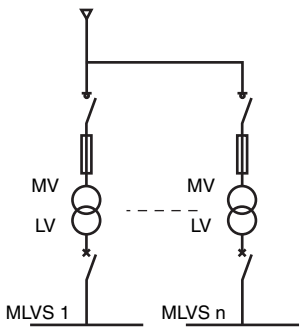

b) Open ring, 1 MV substation:

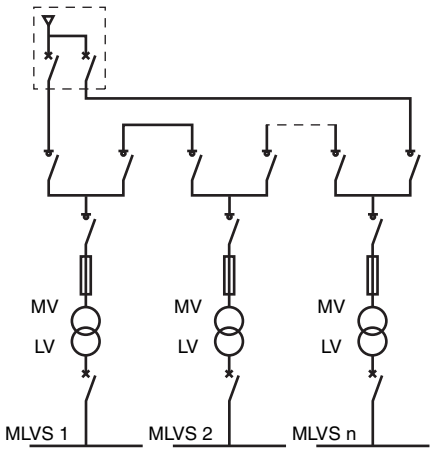

c) Open ring, 2 MV substations:

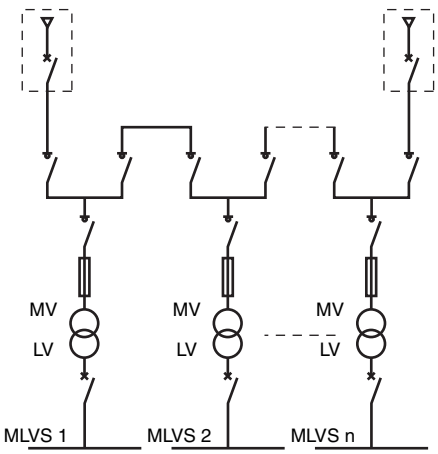

Fig. D9 : MV circuit configuration

6 Choice of architecture fundamentals

For the different possible ocnfigurations, the most probable and usual set of characteristics is given in the table on **Fig D10**.

	MV circuit configuration		
Characteristic to consider	**Single feeder**	**Open ring 1 MV substation**	**Open ring 2 MV substations**
Site topology	Any < 25000m²	Building with one level or several buildings ≤ 25000m²	Several buildings ≥ 25000m²
Maintainability	Minimal or standard	Enhanced	Enhanced
Power demand	Any	> 1250kVA	> 2500kVA
Disturbance sensitivity	Long interruption acceptable	Short interruption acceptable	Short interruption acceptable

Fig. D10 : Typical values of the installation characteristics

Another exceptional configuration: power supply by 2 MV substations and connection of the transformers to each of these 2 substations (MV “double ended” connection).

6.3 Number and distribution of MV/LV transformation substations

Main characteristics to consider to determine the transformation substations:
- Surface area of building or site
- Power demand, (to be compared with standardized transformer power),
- Load distribution

The preferred basic configuration comprises one single substation. Certain factors contribute to increasing the number of substations (> 1):
- A large surface area (> 25000m²),
- The site configuration: several buildings,
- Total power > 2500kVA,
- Sensitivity to interruption: need for redundancy in the case of a fire.

	Configuration		
Characteristic to consider	**1 substation with N transformers**	**N substations N transformers (identical substations)**	**N substations M transformers (different powers)**
Building configuration	< 25000m²	≥ 25000m² 1 building with several floors	≥ 25000m² several buildings
Power demand	< 2500kVA	≥ 2500kVA	≥ 2500kVA
Load distribution	Localized loads	Uniform distribution	Medium density

Fig. D11 : Typical characteristics of the different configurations

6 Choice of architecture fundamentals

6.4 Number of MV/LV transformers

Main characteristics to consider to determine the number of transformers:
- Surface of building or site
- Total power of the installed loads
- Sensitivity of circuits to power interruptions
- Sensitivity of circuits to disturbances
- Installation scalability

The basic preferred configuration comprises a single transformer supplying the total power of the installed loads. Certain factors contribute to increasing the number of transformers (> 1), preferably of equal power:
- A high total installed power (> 1250kVA): practical limit of unit power (standardization, ease of replacement, space requirement, etc),
- A large surface area (> 5000m²): the setting up of several transformers as close as possible to the distributed loads allows the length of LV trunking to be reduced
- A need for partial redundancy (down-graded operation possible in the case of a transformer failure) or total redundancy (normal operation ensured in the case a transformer failure)
- Separating of sensitive and disturbing loads (e.g.: IT, motors)

6.5 MV back-up generator

Main characteristics to consider for the implementation of an MV back-up generator:
- Site activity
- Total power of the installed loads
- Sensitivity of circuits to power interruptions
- Availability of the public distribution network

The preferred basic configuration does not include an MV generator. Certain factors contribute to installing an MV generator:
- Site activity: process with co-generation, optimizing the energy bill,
- Low availability of the public distribution network.

Installation of a back-up generator can also be carried out at LV level.

7 Choice of architecture details

This is the second stage in designing of the electrical installation. During this stage we carry out the following choices are carried out:
- Layout,
- Centralized or decentralized distribution,
- Presence of back-up generators,
- Presence of uninterruptible power supplies,
- Configuration of LV circuits,
- Architecture combinations.

7.1 Layout

Position of the main MV and LV equipment on the site or in the building.
This layout choice is applied to the results of stage 1.

Selection guide:
- Place power sources as close as possible to the barycenter of power consumers,
- Reduce atmospheric constraints: building dedicated premises if the layout in the workshop is too restrictive (temperature, vibrations, dust, etc.),
- Placing heavy equipment (transformers, generators, etc) close to walls or main exists for ease of maintenance,

A layout example is given in the following diagram (**Fig. D12**):

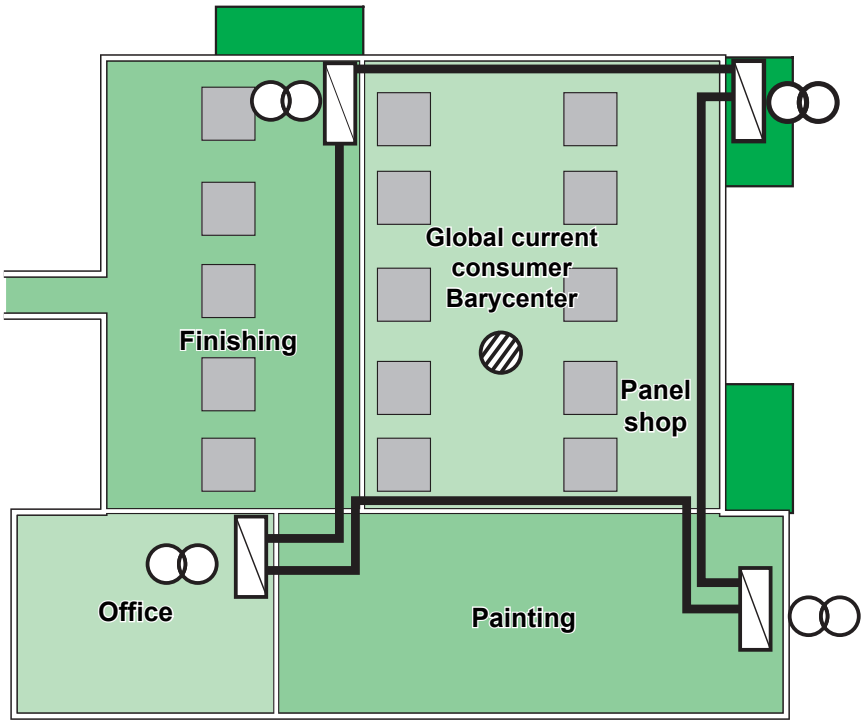

Fig. D12 : The position of the global current consumer barycenter guides the positioning of power sources

7.2 Centralized or distributed layout

In **centralized layout**, current consumers are connected to the power sources by a star-connection. Cables are suitable for centralized layout, with point to point links between the MLVS and current consumers or sub-distribution boards (radial distribution, star- distribution) (**Fig. D13**):

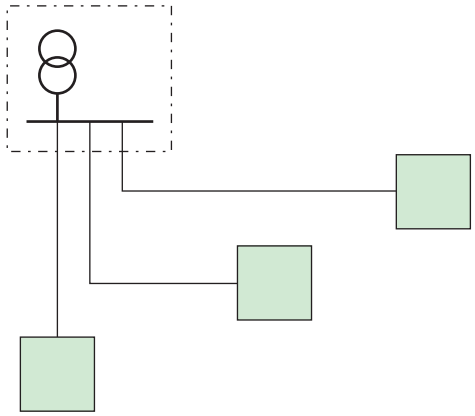

***Fig. D13**: Example of centralized layout with point to point links*

In **decentralized layout**, current consumers are connected to sources via a busway. Busbar trunking systems are well suited to decentralized layout, to supply many loads that are spread out, making it easy to change, move or add connections (**Fig D14**):

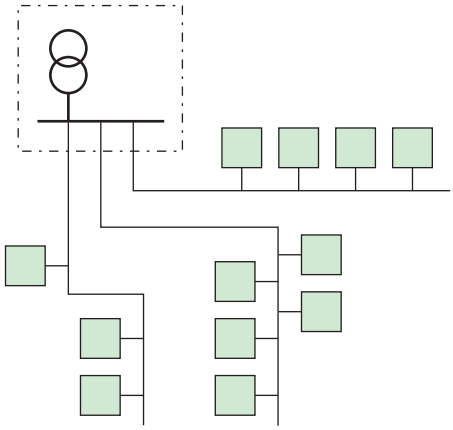

***Fig. D14** : Example of decentralized layout, with busbar trunking links*

Factors in favour of centralized layout (see summary table in **Fig. D15**):
- Installation flexibility: no,
- Load distribution: localized loads (high unit power loads).

Factors in favor of decentralized layout:
- Installation flexibility: "Implementation" flexibility (moving of workstations, etc…),
- Load distribution: uniform distribution of low unit power loads

7 Choice of architecture details

	Load distribution		
Flexibility	**Localized loads**	**Intermediate distribution**	**Uniform distributed**
No flexibility	Centralized		Decentralized
Design flexibility			
Implementation flexibility	Centralized	Decentralized	
Operation flexibility			

Fig. D15 : Recommendations for centralized or decentralized layout

Power supply by cables gives greater independence of circuits (lighting, power sockets, HVAC, motors, auxiliaries, security, etc), reducing the consequences of a fault from the point of view of power availability.

The use of busbar trunking systems allows load power circuits to be combined and saves on conductors by taking advantage of a clustering coefficient. The choice between cable and busbar trunking, according to the clustering coefficient, allows us to find an economic optimum between investment costs, implementation costs and operating costs.

These two distribution modes are often combined.

Presence of back-up generators (Fig. D16)

Here we only consider LV back-up generators.
The electrical power supply supplied by a back-up generator is produced by an alternator, driven by a thermal engine.
No power can be produced until the generator has reached its rated speed. This type of device is therefore not suitable for an uninterrupted power supply.
According to the generator's capacity to supply power to all or only part of the installation, there is either total or partial redundancy.
A back-up generator functions generally disconnected from the network. A source switching system is therefore necessary.
The generator can function permanently or intermittently. Its back-up time depends on the quantity of available fuel.

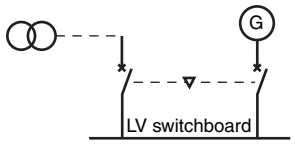

Fig. D16 : Connection of a back-up generator

The main characteristics to consider for implementing LV back-up generator:
- Sensitivity of loads to power interruption,
- Availability of the public distribution network,
- Other constraints (e.g.: generators compulsory in hospitals or high-vise buildings)

The presence of generators can be decided to reduce the energy bill or due to the opportunity for co-generation. These two aspects are not taken into account in this guide.

The presence of a back-up generator is essential if the loads cannot be shed for an indefinite duration (long interruption only acceptable) or if the utility network availability is low.

Determining the number of back-up generator units is in line with the same criteria as determining the number of transformers, as well as taking account of economic and availability considerations (redundancy, start-up reliability, maintenance facility).

7.3 Presence of an Uninterruptible Power Supply (UPS)

The electrical power from a UPS is supplied from a storage unit: batteries or inertia wheel. This system allows us to avoid any power failure. The back-up time of the system is limited: from several minutes to several hours.
The simultaneous presence of a back-up generator and a UPS unit is used for permanently supply loads for which no failure is acceptable (**Fig. D17**). The back-up time of the battery or the inertia wheel must be compatible with the maximum time for the generator to start up and be brought on-line.
A UPS unit is also used for supply power to loads that are sensitive to disturbances (generating a “clean” voltage that is independent of the network).

Main characteristics to be considered for implementing a UPS:
- Sensitivity of loads to power interruptions,
- Sensitivity of loads to disturbances.

The presence of a UPS unit is essential if and only if no failure is acceptable.

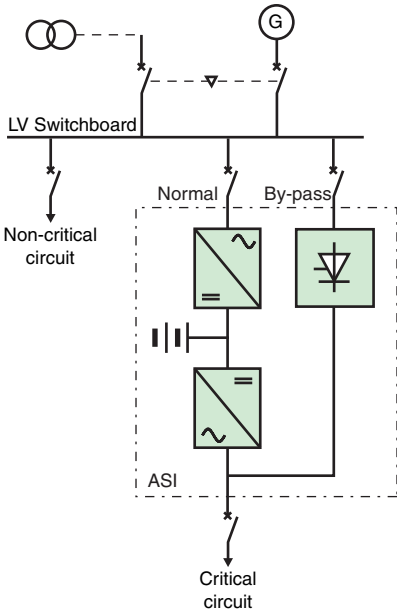

Fig. D17 : Example of connection for a UPS

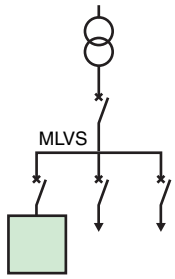

Fig. D18 : Radial single feeder configuration

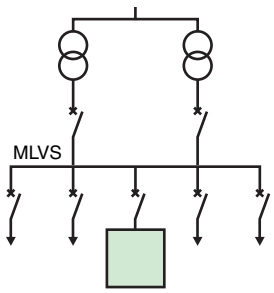

Fig. D19 : Two-pole configuration

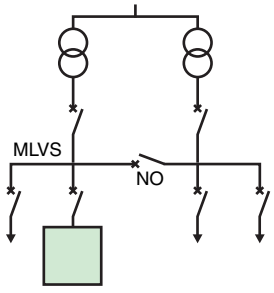

Fig. D20 : Two-pole configuration with two ½ MLVS and NO link

7.4 Configuration of LV circuits

Main possible configurations (see **figures D18 to D25**):
- **Radial single feeder configuration:** This is the reference configuration and the most simple. A load is connected to only one single source. This configuration provides a minimum level of availability, since there is no redundancy in case of power source failure.
- **Two-pole configuration**: The power supply is provided by 2 transformers, connected to the same MV line. When the transformers are close, they are generally connected in parallel to the same MLVS.
- **Variant: two-pole with two ½ MLVS**: In order to increase the availability in case of failure of the busbars or authorize maintenance on one of the transformers, it is possible to split the MLVS into 2 parts, with a normally open link (NO). This configuration generally requires an Automatic Transfer Switch, (ATS).
- **Shedable switchboard (simple disconnectable attachment)**: A series of shedable circuits can be connected to a dedicated switchboard. The connection to the MLVS is interrupted when needed (overload, generator operation, etc)
- **Interconnected switchboards:** If transformers are physically distant from one another, they may be connected by a busbar trunking. A critical load can be supplied by one or other of the transformers. The availability of power is therefore improved, since the load can always be supplied in the case of failure of one of the sources. The redundancy can be:
  - Total: each transformer being capable of supplying all of the installation,
  - Partial: each transformer only being able to supply part of the installation. In this case, part of the loads must be disconnected (load-shedding) in the case of one of the transformers failing.

7 Choice of architecture details

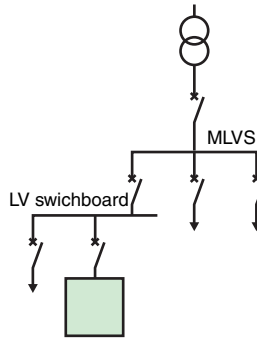

Fig. D21 : Shedable switchboard

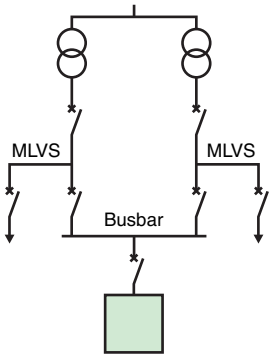

Fig. D22 : Interconnected switchboards

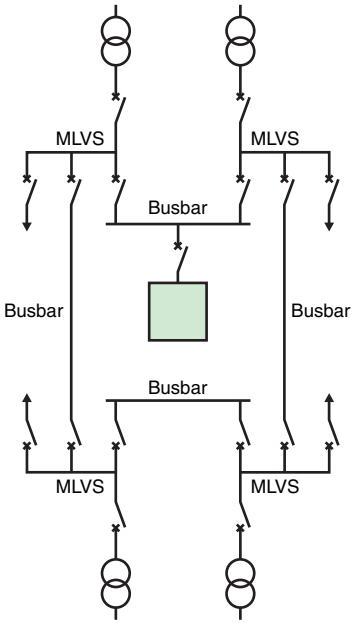

Fig. D23 : Ring configuration

■ **Ring configuration**: This configuration can be considered as an extension of the configuration with interconnection between switchboards. Typically, 4 transformers connected to the same MV line, supply a ring using busbar trunking. A given load is then supplied power by several clustered transformers. This configuration is well suited to extended installations, with a high load density (in kVA/m²). If all of the loads can be supplied by 3 transformers, there is total redundancy in the case of failure of one of the transformers. In fact, each busbar can be fed power by one or other of its ends. Otherwise, downgraded operation must be considered (with partial load shedding). This configuration requires special design of the protection plan in order to ensure discrimination in all of the fault circumstances.

■ **Double-ended power supply**: This configuration is implemented in cases where maximum availability is required. The principle involves having 2 independent power sources, e.g.:

- 2 transformers supplied by different MV lines,
- 1 transformer and 1 generator,
- 1 transformer and 1 UPS.

An automatic transfer switch (ATS) is used to avoid the sources being parallel connected. This configuration allows preventive and curative maintenance to be carried out on all of the electrical distribution system upstream without interrupting the power supply.

■ **Configuration combinations**: An installation can be made up of several sub-asssemblies with different configurations, according to requirements for the availability of the different types of load. E.g.: generator unit and UPS, choice by sectors (some sectors supplied by cables and others by busbar trunking).

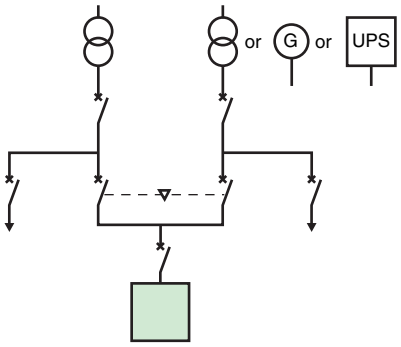

Fig. D24 : Double-ended configuration with automatic transfer switch

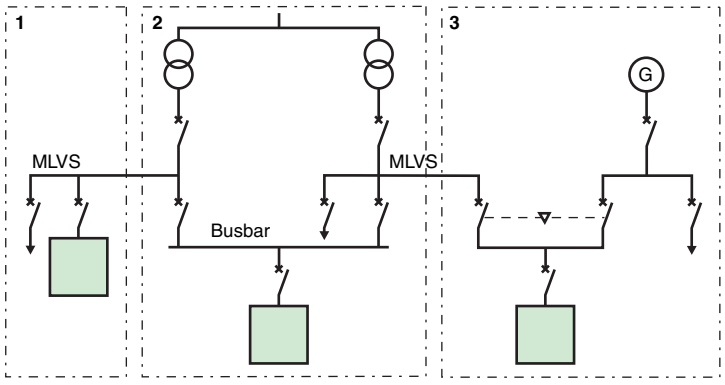

Fig. D25 : Example of a configuration combination
1: Single feeder, 2: Switchboard interconnection, 3: Double-ended

7 Choice of architecture details

For the different possible configurations, the most probable and usual set of characteristics is given in the following table:

Characteristic to be considered	Configuration					
	Radial	Two-pole	Sheddable load	Interconnected switchboards	Ring	Double-ended
Site topology	Any	Any	Any	1 level 5 to 25000m²	1 level 5 to 25000m²	Any
Location latitude	Any	Any	Any	Medium of high	Medium or high	Any
Maintainability	Minimal	Standard	Minimal	Standard	Standard	Enhanced
Power demand	< 2500kVA	Any	Any	≥ 1250kVA	> 2500kVA	Any
Load distribution	Localized loads	Localized loads	Localized load	Intermediate or uniforme distribution	Uniform distribution	Localized loads
Interruptions sensitivity	Long interruption acceptable	Long interruption acceptable	Sheddable	Long interruption acceptable	Long interruption acceptable	Short or no interruption
Disturbances sensitivity	Low sensitivity	High sensitivity	Low sensitivity	High sensitivity	High sensitivity	High sensitivity
Other constraints	/	/	/	/	/	Double-ended loads

8 Choice of equipment

The choice of equipment is step 3 in the design of an electrical installation. The aim of this step is to select equipment from the manufacturers' catalogues. The choice of technological solutions results from the choice of architecture.

List of equipment to consider:

- MV/LV substation,
- MV switchboards,
- Transformers,
- LV switchboards,
- Busbar trunking,
- UPS units,
- Power factor correction and filtering equipment.

Criteria to consider:

- Atmosphere, environment,
- Service index,
- Offer availability per country,
- Utilities requirements,
- Previous architecture choices.

The choice of equipment is basically linked to the offer availability in the country. This criterion takes into account the availability of certain ranges of equipment or local technical support.

The detailed selection of equipment is out of the scope of this document.

9 Recommendations for architecture optimization

These recommendations are intended to guide the designer towards architecture upgrades which allow him to improve assessment criteria.

9.1 On-site work

To be compatible with the “special” or “critical” work-site time, it is recommended to limit uncertainties by applying the following recommendations:
- Use of proven solutions and equipment that has been validated and tested by manufacturers (“functional” switchboard or “manufacturer” switchboard according to the application criticality),
- Prefer the implementation of equipment for which there is a reliable distribution network and for which it is possible to have local support (supplier well established),
- Prefer the use of factory-built equipment (MV/LV substation, busbar trunking), allowing the volume of operations on site to be limited,
- Limit the variety of equipment implemented (e.g. the power of transformers),
- Avoid mixing equipment from different manufacturers.

9.2 Environmental impact

The optimization of the environmental assessment of an installation will involve reducing:
- Power losses at full load and no load during installation operation,
- Overall, the mass of materials used to produce the installation.

Taken separately and when looking at only one piece of equipment, these 2 objectives may seem contradictory. However, when applied to whole installation, it is possible to design the architecture to contribute to both objectives. The optimal installation will therefore not be the sum of the optimal equipment taken separately, but the result of an optimization of the overall installation.
Figure D26 gives an example of the contribution per equipment category to the weight and energy dissipation for a 3500 kVA installation spread over 10000m².

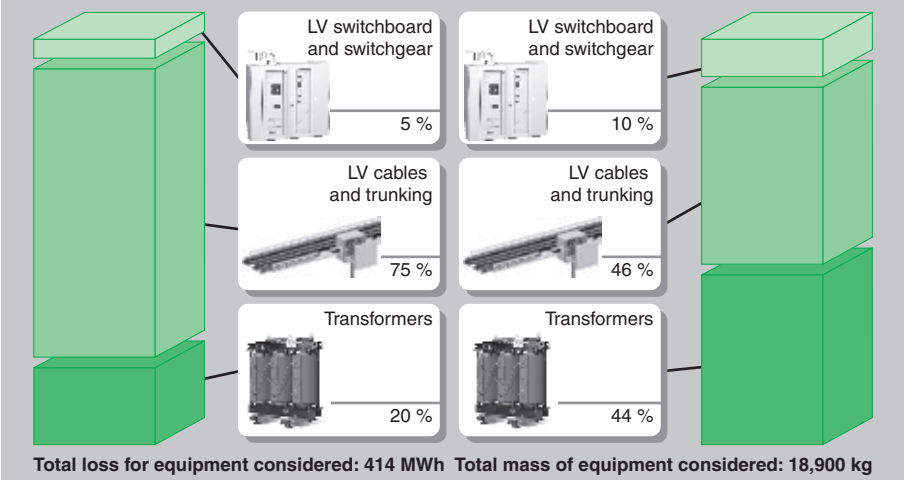

Fig. D26 : Example of the spread of losses and the weight of material for each equipment category

Generally speaking, LV cables and trunking as well as the MV/LV transformers are the main contributors to operating losses and the weight of equipment used.

Environmental optimization of the installation by the architecture will therefore involve:
- reducing the length of LV circuits in the installation,
- clustering LV circuits wherever possible to take advantage of the factor of simultaneity ks (see chapter A: General rules of electrical installation design, Chapter – Power loading of an installation, 4.3 “Estimation of actual maximum kVA demand”)

9 Recommendations for architecture optimization

Objectives	Resources
Reducing the length of LV circuits	Placing MV/LV substations as close as possible to the barycenter of all of the LV loads to be supplied
Clustering LV circuits	When the simultaneity factor of a group of loads to be supplied is less than 0.7, the clustering of circuits allows us to limit the volume of conductors supplying power to these loads. In real terms this involves: ■ setting up sub-distribution switchboards as close as possible to the barycenter of the groups of loads if they are localized, ■ setting up busbar trunking systems as close as possible to the barycenter of the groups of loads if they are distributed. The search for an optimal solution may lead to consider several clustering scenarios. In all cases, reducing the distance between the barycenter of a group of loads and the equipment that supplies them power allows to reduce environmental impact.

Fig. D27 : Environmental optimization : Objectives and Ressources.

As an example **figure D28** shows the impact of clustering circuits on reducing the distance between the barycenter of the loads of an installation and that of the sources considered (MLVS whose position is imposed). This example concerns a mineral water bottling plant for which:
■ the position of electrical equipment (MLVS) is imposed in the premises outside of the process area for reasons of accessibility and atmosphere constraints,
■ the installed power is around 4 MVA.

In solution No.1, the circuits are distributed for each workshop.
In solution No. 2, the circuits are distributed by process functions (production lines).

Solution	Barycenter position
N°1	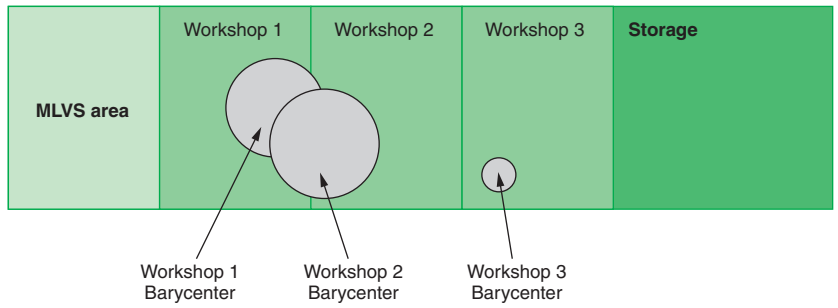
N°2	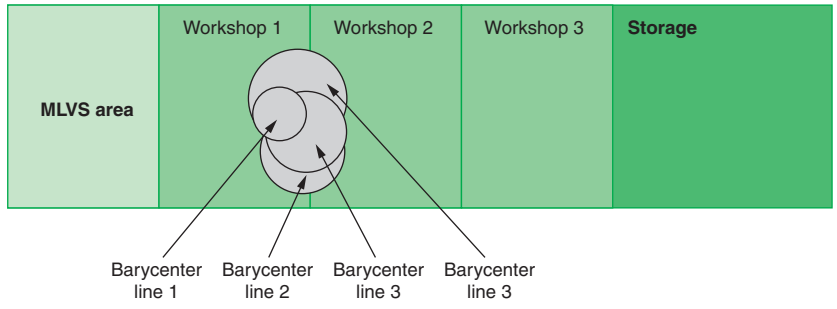

Fig. D28 : Example of barycenter positioning

9 Recommendations for architecture optimization

Without changing the layout of electrical equipment, the second solution allows us to achieve gains of around 15% on the weight of LV cables to be installed (gain on lengths) and a better uniformity of transformer power.

To supplement the optimizations carried out in terms of architecture, the following points also contribute to the optimization:

- the setting up of LV power factor correction to limit losses in the transformers and LV circuits if this compensation is distributed,
- the use of low loss transformers,
- the use of aluminum LV busbar trunking when possible, since natural resources of this metal are greater.

9.3 Preventive maintenance volume

Recommendations for reducing the volume of preventive maintenance:
- Use the same recommendations as for reducing the work site time,
- Focus maintenance work on critical circuits,
- Standardize the choice of equipment,
- Use equipment designed for severe atmospheres (requires less maintenance).

9.4 Electrical power availability

Recommendations for improving the electrical power availability:
- Reduce the number of feeders per switchboard, in order to limit the effects of a possible failure of a switchboard,
- Distributing circuits according to availability requirements,
- Using equipment that is in line with requirements (see Service Index, 4.2),
- Follow the selection guides proposed for steps 1 & 2 (see **Fig. D3 page D5**).

Recommendations to increase the level of availability:
- Change from a radial single feeder configuration to a two-pole configuration,
- Change from a two-pole configuration to a double-ended configuration,
- Change from a double-ended configuration to a uninterruptible configuration with a UPS unit and a Static Transfer Switch
- Increase the level of maintenance (reducing the MTTR, increasing the MTBF)

10 Glossary

Architecture: choice of a single-line diagram and technological solutions, from connection to the utility network through to load power supply circuits.

Main MV/LV distribution: Level upstream of the architecture, from connection to the network utility through to LV distribution equipment on the site (MLVS – or equivalent).

MLVS – Main Low Voltage Switchboard: Main switchboard downstream of the MV/LV transformer, starting point of power distribution circuits in the installation

LV power distribution: intermediate level in the architecture, downstream of the main level through to the sub-distribution switchboards (spatial and functional distribution of electrical power in the circuits).

LV terminal distribution: Downstream level of the architecture, downstream of the sub-distribution switchboards through to the loads. This level of distribution is not dealt with in this guide.

Single-line diagram: general electrical schematic diagram to represent the main electrical equipment and their interconnection.

MV substation, transformation substation: Enclosures grouping together MV equipment and/or MV/LV transformers. These enclosures can be shared or separate, according to the site layout, or the equipment technology. In certain countries, the MV substation is assimilated with the delivery substation.

Technological solution: Resulting from the choice of technology for an installation sub-assembly, from among the different products and equipment proposed by the manufacturer.

Characteristics: Technical or environmental data relative to the installation, enabling the best-suited architecture to be selected.

Criteria: Parameters for assessing the installation, enabling selection of the architecture that is the best-suited to the needs of the customer.

11 ID-Spec software

ID-Spec is a new software which aims at helping the designer to be more productive in draft design phase and argue easily his design decisions.
It supports the designer in selecting the relevant single line diagram patterns for main distribution and sub distribution and in adapting these patterns to his project. It also supports the designer in equipment technology and rating selection. Its generates automatically the corresponding design specification documentation including single line diagram and its argument, list and specification of the corresponding equipment.

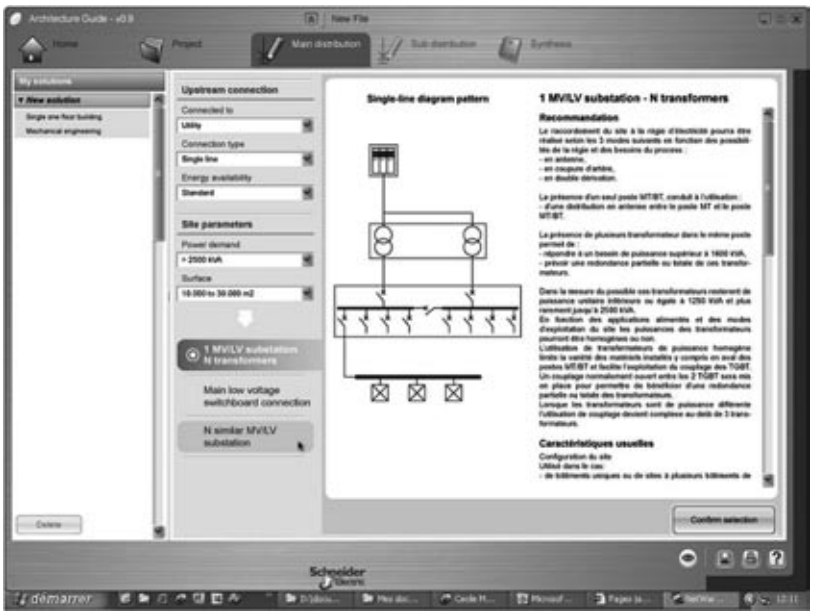

12 Example: electrical installation in a printworks

12.1 Brief description

Printing of personalized mailshots intended for mail order sales.

12.2 Installation characteristics

Characteristic	Category
Activity	Mechanical
Site topology	single storey building, 10000m² (8000m² dedicated to the process, 2000m² for ancillary areas)
Layout latitude	High
Service reliability	Standard
Maintainability	Standard
Installation flexibility	■ No flexibility planned: □ HVAC □ Process utilities □ Office power supply ■ Possible flexibility: □ finishing, putting in envelopes □ special machines, installed at a later date □ rotary machines (uncertainty at the draft design stage)
Power demand	3500kVA
Load distribution	Intermediate distribution
Power interruptions sensitivity	■ Sheddable circuits: □ offices (apart from PC power sockets) □ air conditioning, office heating □ social premises □ maintenance premises ■ long interruptions acceptable: □ printing machines □ workshop HVAC (hygrometric control) □ Finishing, envelope filling □ Process utilities (compressor, recycling of cooled water) ■ No interruptions acceptable: □ servers, office PCs
Disturbance sensitivity	■ Average sensitivity: □ motors, lighting ■ High sensitivity: □ IT No special precaution to be taken due to the connection to the EdF network (low level of disturbance)
Disturbance capability	Non disturbing
Other constraints	■ Building with lightning classification: lightning surge arresters installed ■ Power supply by overhead single feeder line

12.3 Technological characteristics

Criteria	Category
Atmosphere, environment	■ IP: standard (no dust, no water protection) ■ IK: standard (use of technical pits, dedicated premises) ■ °C: standard (temperature regulation)
Service index	211
Offer availability by country	No problem (project carried out in France)
Other criteria	Nothing particular

12 Example: electrical installation in a printworks

12.4 Architecture assessment criteria

Criteria	Category
On-site work time	Secondary
Environmental impact	Minimal: compliance with European standard regulations
Preventive maintenance costs	Standard
Power supply availability	Level I

Step 1: Architecture fundamentals

Choice	Main criteria	Solution
Connection to upstream network	Isolated site	single branch circuit
MV Circuits	Layout + criticality	single feeder
Number of transformers	Power > 2500kVA	2 x 2000kVA
Number and distribution of substations	Surface area and power distribution	2 possible solutions: 1 substation or 2 substations ■ if 1 substations: NO link between MLVS ■ if 2 substations: interconnected switchboards
MV Generator	Site activity	No

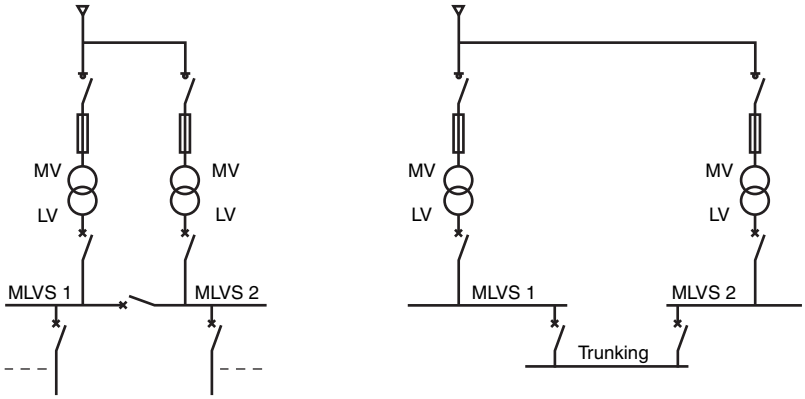

Fig. D29 : Two possible single-line diagrams

12 Example: electrical installation in a printworks

Step 2: Architecture details

"1 substation" solution

Choice	Main criteria	Solution
Layout	Atmospheric constraint	Dedicated premises
Centralized or decentralized layout	Uniform loads, distributed power, scalability possibilities	■ Decentralized with busbar trunking: □ finishing sector, envelope filling
	Non-uniform loads, direct link from MLVS	■ Centralized with cables: □ special machines, rotary machines, HVAC, process utilities, offices (2 switchboards), office air conditioning, social premises, maintenance
Presence of back-up generator	Criticality ≤ low Network availability: standard	No back-up generator
Presence of UPS	Criticality	UPS unit for servers and office PCs
LV circuit configuration	2 transformers, possible partial redundancy	■ Two-pole, variant 2 ½ MLVS + NO link (reduction of the Isc by MLVS, no redundancy ■ process (≤ weak) ■ sheddable circuit for non-critical loads

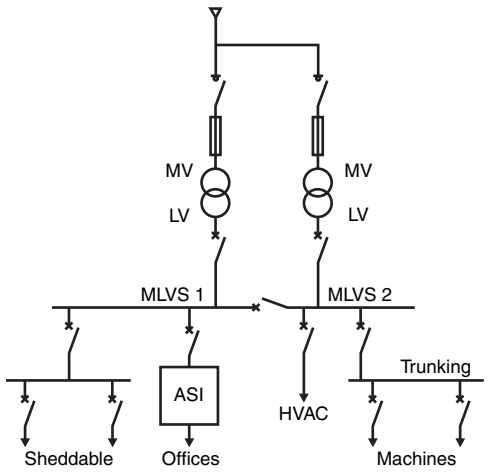

Fig. D30 : Detailed single-line diagram (1 substation)

12 Example: electrical installation in a printworks

12.5 Choice of technological solutions:

Choice	Main criteria	Solution
MV/LV substation	Atmosphere, environment	indoor (dedicated premises)
MV switchboard	Offer availability by country	SM6 (installation produced in France)
Transformers	Atmosphere, environment	cast resin transfo (avoids constraints related to oil)
LV switchboard	Atmosphere, IS	MLVS: Prisma + P Sub-distribution: Prisma +
Busbar trunking	Installed power to be supplied	Canalis KS
UPS units	Installed power to be supplied, back-up time	Galaxy PW
Power factor correction	Installed power, presence of harmonics	LV, standard, automatic (Average Q, ease of installation)

"2 substation" solution

Ditto apart from:
LV circuit: 2 remote MLVS connected via busbar trunking

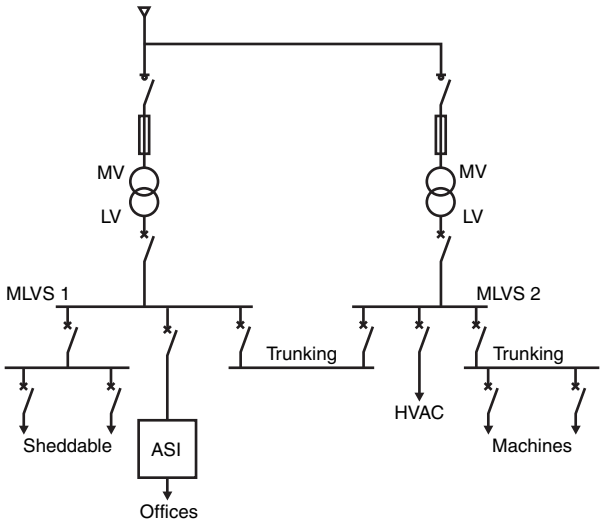

Fig. D31 : Detailed single-line diagram (2 substations)