Chapter E
LV Distribution

Contents

1	**Earthing schemes**	**E2**
	1.1 Earthing connections	E2
	1.2 Definition of standardised earthing schemes	E3
	1.3 Characteristics of TT, TN and IT systems	E6
	1.4 Selection criteria for the TT, TN and IT systems	E8
	1.5 Choice of earthing method - implementation	E10
	1.6 Installation and measurements of earth electrodes	E11
2	**The installation system**	**E15**
	2.1 Distribution boards	E15
	2.2 Cables and busways	E18
3	**External influences (IEC 60364-5-51)**	**E25**
	3.1 Definition and reference standards	E25
	3.2 Classification	E25
	3.3 List of external influences	E25
	3.4 Protection provided for enclosed equipment: codes IP and IK	E28

1 Earthing schemes

In a building, the connection of all metal parts of the building and all exposed conductive parts of electrical equipment to an earth electrode prevents the appearance of dangerously high voltages between any two simultaneously accessible metal parts

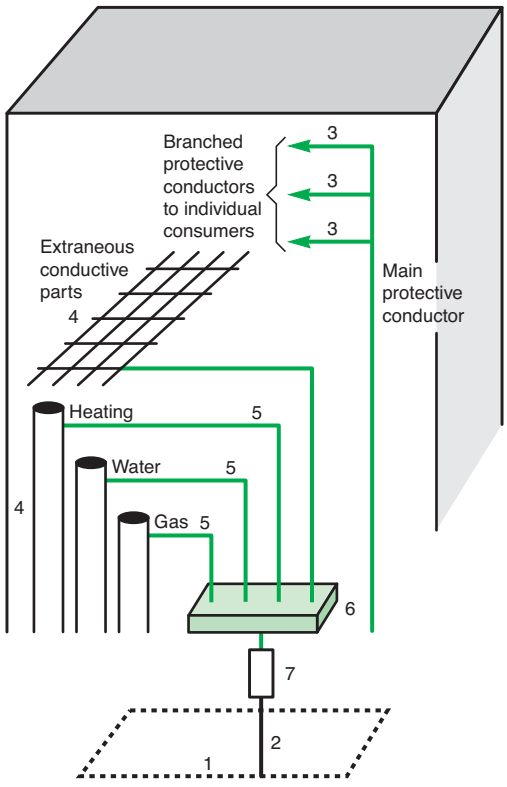

Fig. E1 : An example of a block of flats in which the main earthing terminal (6) provides the main equipotential connection; the removable link (7) allows an earth-electrode-resistance check

1.1 Earthing connections

Definitions

National and international standards (IEC 60364) clearly define the various elements of earthing connections. The following terms are commonly used in industry and in the literature. Bracketed numbers refer to **Figure E1** :

- Earth electrode (1): A conductor or group of conductors in intimate contact with, and providing an electrical connection with Earth (cf details in section 1.6 of Chapter E.)
- Earth: The conductive mass of the Earth, whose electric potential at any point is conventionally taken as zero
- Electrically independent earth electrodes: Earth electrodes located at such a distance from one another that the maximum current likely to flow through one of them does not significantly affect the potential of the other(s)
- Earth electrode resistance: The contact resistance of an earth electrode with the Earth
- Earthing conductor (2): A protective conductor connecting the main earthing terminal (6) of an installation to an earth electrode (1) or to other means of earthing (e.g. TN systems);
- Exposed-conductive-part: A conductive part of equipment which can be touched and which is not a live part, but which may become live under fault conditions
- Protective conductor (3): A conductor used for some measures of protection against electric shock and intended for connecting together any of the following parts:
  - Exposed-conductive-parts
  - Extraneous-conductive-parts
  - The main earthing terminal
  - Earth electrode(s)
  - The earthed point of the source or an artificial neutral
- Extraneous-conductive-part: A conductive part liable to introduce a potential, generally earth potential, and not forming part of the electrical installation (4).
  For example:
  - Non-insulated floors or walls, metal framework of buildings
  - Metal conduits and pipework (not part of the electrical installation) for water, gas, heating, compressed-air, etc. and metal materials associated with them
- Bonding conductor (5): A protective conductor providing equipotential bonding
- Main earthing terminal (6): The terminal or bar provided for the connection of protective conductors, including equipotential bonding conductors, and conductors for functional earthing, if any, to the means of earthing.

Connections

The main equipotential bonding system

The bonding is carried out by protective conductors and the aim is to ensure that, in the event of an incoming extraneous conductor (such as a gas pipe, etc.) being raised to some potential due to a fault external to the building, no difference of potential can occur between extraneous-conductive-parts within the installation.

The bonding must be effected as close as possible to the point(s) of entry into the building, and be connected to the main earthing terminal (6).

However, connections to earth of metallic sheaths of communications cables require the authorisation of the owners of the cables.

Supplementary equipotential connections

These connections are intended to connect all exposed-conductive-parts and all extraneous-conductive-parts simultaneously accessible, when correct conditions for protection have not been met, i.e. the original bonding conductors present an unacceptably high resistance.

Connection of exposed-conductive-parts to the earth electrode(s)

The connection is made by protective conductors with the object of providing a low-resistance path for fault currents flowing to earth.

1 Earthing schemes

Components (see **Fig. E2**)

Effective connection of all accessible metal fixtures and all exposed-conductive-parts of electrical appliances and equipment, is essential for effective protection against electric shocks.

Component parts to consider:	
as exposed-conductive-parts	**as extraneous-conductive-parts**
Cableways ■ Conduits ■ Impregnated-paper-insulated lead-covered cable, armoured or unarmoured ■ Mineral insulated metal-sheathed cable (pyrotenax, etc.)	Elements used in building construction ■ Metal or reinforced concrete (RC): □ Steel-framed structure □ Reinforcement rods □ Prefabricated RC panels ■ Surface finishes: □ Floors and walls in reinforced concrete without further surface treatment □ Tiled surface ■ Metallic covering: □ Metallic wall covering
Switchgear ■ cradle of withdrawable switchgear	
Appliances ■ Exposed metal parts of class 1 insulated appliances	
Non-electrical elements ■ metallic fittings associated with cableways (cable trays, cable ladders, etc.) ■ Metal objects: □ Close to aerial conductors or to busbars □ In contact with electrical equipment.	Building services elements other than electrical ■ Metal pipes, conduits, trunking, etc. for gas, water and heating systems, etc. ■ Related metal components (furnaces, tanks, reservoirs, radiators) ■ Metallic fittings in wash rooms, bathrooms, toilets, etc. ■ Metallised papers

Component parts not to be considered:	
as exposed-conductive-parts	**as extraneous-conductive-parts**
Diverse service channels, ducts, etc. ■ Conduits made of insulating material ■ Mouldings in wood or other insulating material ■ Conductors and cables without metallic sheaths	■ Wooden-block floors ■ Rubber-covered or linoleum-covered floors ■ Dry plaster-block partition ■ Brick walls ■ Carpets and wall-to-wall carpeting
Switchgear ■ Enclosures made of insulating material	
Appliances ■ All appliances having class II insulation regardless of the type of exterior envelope	

***Fig. E2** : List of exposed-conductive-parts and extraneous-conductive-parts*

The different earthing schemes (often referred to as the type of power system or system earthing arrangements) described characterise the method of earthing the installation downstream of the secondary winding of a MV/LV transformer and the means used for earthing the exposed conductive-parts of the LV installation supplied from it

1.2 Definition of standardised earthing schemes

The choice of these methods governs the measures necessary for protection against indirect-contact hazards.
The earthing system qualifies three originally independent choices made by the designer of an electrical distribution system or installation:

- The type of connection of the electrical system (that is generally of the neutral conductor) and of the exposed parts to earth electrode(s)
- A separate protective conductor or protective conductor and neutral conductor being a single conductor
- The use of earth fault protection of overcurrent protective switchgear which clear only relatively high fault currents or the use of additional relays able to detect and clear small insulation fault currents to earth

In practice, these choices have been grouped and standardised as explained below.

Each of these choices provides standardised earthing systems with three advantages and drawbacks:

- Connection of the exposed conductive parts of the equipment and of the neutral conductor to the PE conductor results in equipotentiality and lower overvoltages but increases earth fault currents
- A separate protective conductor is costly even if it has a small cross-sectional area but it is much more unlikely to be polluted by voltage drops and harmonics, etc. than a neutral conductor is. Leakage currents are also avoided in extraneous conductive parts
- Installation of residual current protective relays or insulation monitoring devices are much more sensitive and permits in many circumstances to clear faults before heavy damage occurs (motors, fires, electrocution). The protection offered is in addition independent with respect to changes in an existing installation

1 Earthing schemes

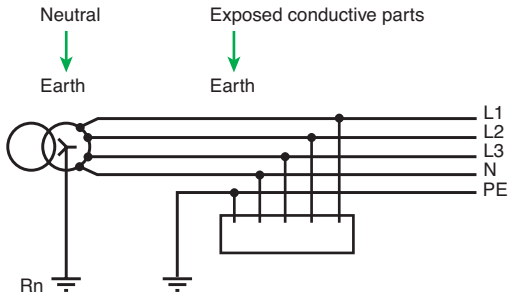

Fig. E3 : TT System

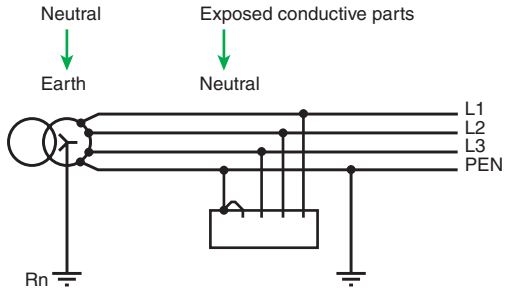

Fig. E4 : TN-C system

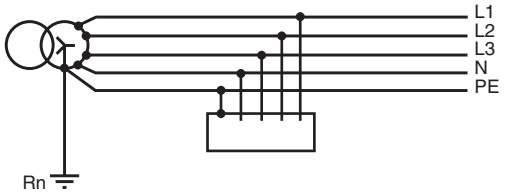

Fig. E5 : TN-S system

TT system (earthed neutral) (see **Fig. E3**)

One point at the supply source is connected directly to earth. All exposed- and extraneous-conductive-parts are connected to a separate earth electrode at the installation. This electrode may or may not be electrically independent of the source electrode. The two zones of influence may overlap without affecting the operation of protective devices.

TN systems (exposed conductive parts connected to the neutral)

The source is earthed as for the TT system (above). In the installation, all exposed- and extraneous-conductive-parts are connected to the neutral conductor. The several versions of TN systems are shown below.

TN-C system (see **Fig. E4**)

The neutral conductor is also used as a protective conductor and is referred to as a PEN (Protective Earth and Neutral) conductor. This system is not permitted for conductors of less than 10 mm^2 or for portable equipment.

The TN-C system requires an effective equipotential environment within the installation with dispersed earth electrodes spaced as regularly as possible since the PEN conductor is both the neutral conductor and at the same time carries phase unbalance currents as well as 3rd order harmonic currents (and their multiples).

The PEN conductor must therefore be connected to a number of earth electrodes in the installation.

Caution: In the TN-C system, the “protective conductor” function has priority over the “neutral function”. In particular, a PEN conductor must always be connected to the earthing terminal of a load and a jumper is used to connect this terminal to the neutral terminal.

TN-S system (see **Fig. E5**)

The TN-S system (5 wires) is obligatory for circuits with cross-sectional areas less than 10 mm^2 for portable equipment.

The protective conductor and the neutral conductor are separate. On underground cable systems where lead-sheathed cables exist, the protective conductor is generally the lead sheath. The use of separate PE and N conductors (5 wires) is obligatory for circuits with cross-sectional areas less than 10 mm^2 for portable equipment.

TN-C-S system (see **Fig. E6** below and **Fig. E7** next page)

The TN-C and TN-S systems can be used in the same installation. In the TN-C-S system, the TN-C (4 wires) system must never be used downstream of the TN-S (5 wires) system, since any accidental interruption in the neutral on the upstream part would lead to an interruption in the protective conductor in the downstream part and therefore a danger.

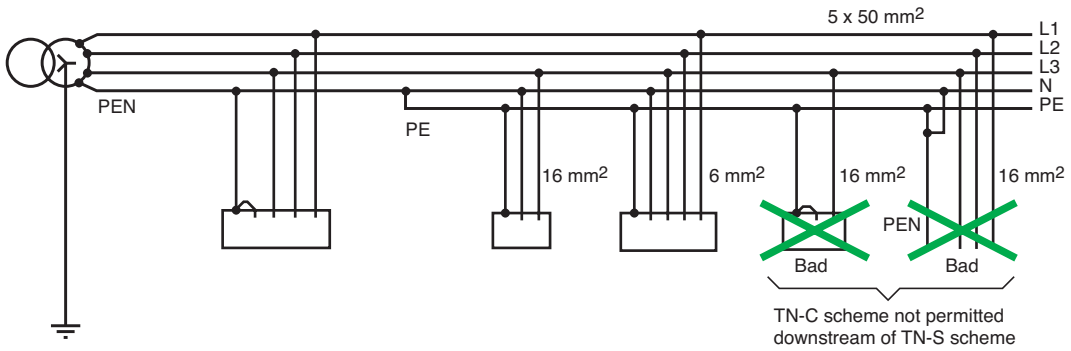

Fig. E6 : TN-C-S system

1 Earthing schemes

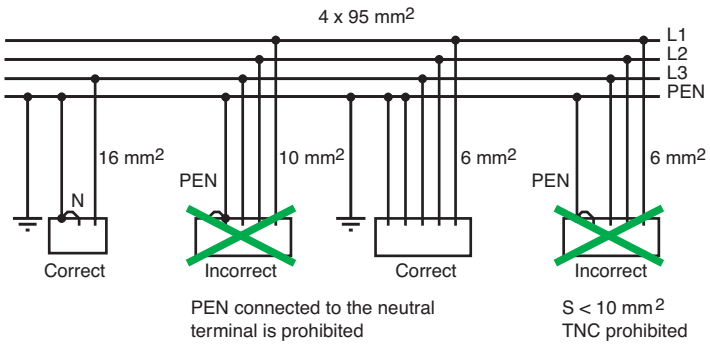

Fig. E7 : Connection of the PEN conductor in the TN-C system

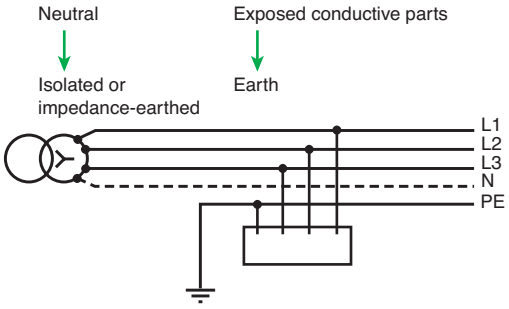

Fig. E8 : IT system (isolated neutral)

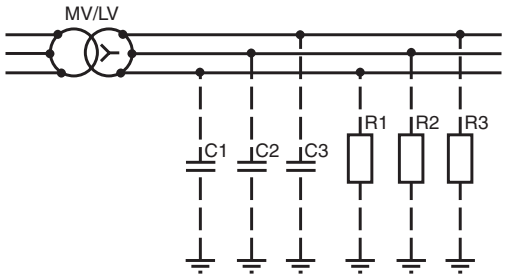

Fig. E9 : IT system (isolated neutral)

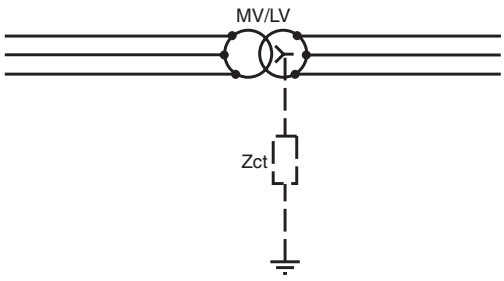

Fig. E10 : Impedance equivalent to leakage impedances in an IT system

IT system (isolated or impedance-earthed neutral)

IT system (isolated neutral)

No intentional connection is made between the neutral point of the supply source and earth (see **Fig. E8**).

Exposed- and extraneous-conductive-parts of the installation are connected to an earth electrode.

In practice all circuits have a leakage impedance to earth, since no insulation is perfect. In parallel with this (distributed) resistive leakage path, there is the distributed capacitive current path, the two paths together constituting the normal leakage impedance to earth (see **Fig. E9**).

Example (see **Fig. E10**)

In a LV 3-phase 3-wire system, 1 km of cable will have a leakage impedance due to C1, C2, C3 and R1, R2 and R3 equivalent to a neutral earth impedance Zct of 3,000 to 4,000 Ω, without counting the filtering capacitances of electronic devices.

IT system (impedance-earthed neutral)

An impedance Zs (in the order of 1,000 to 2,000 Ω) is connected permanently between the neutral point of the transformer LV winding and earth (see **Fig. E11**). All exposed- and extraneous-conductive-parts are connected to an earth electrode. The reasons for this form of power-source earthing are to fix the potential of a small network with respect to earth (Zs is small compared to the leakage impedance) and to reduce the level of overvoltages, such as transmitted surges from the MV windings, static charges, etc. with respect to earth. It has, however, the effect of slightly increasing the first-fault current level.

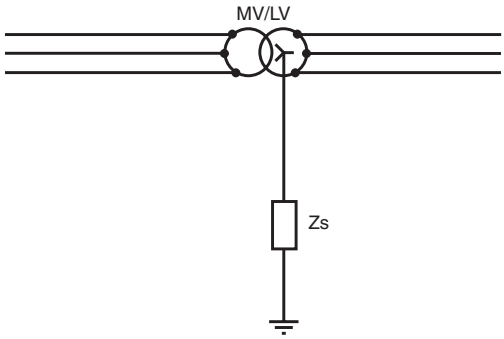

Fig. E11 : IT system (impedance-earthed neutral)

1 Earthing schemes

1.3 Characteristics of TT, TN and IT systems

The TT system:

■ *Technique for the protection of persons: the exposed conductive parts are earthed and residual current devices (RCDs) are used*

■ *Operating technique: interruption for the first insulation fault*

TT system (see **Fig. E12**)

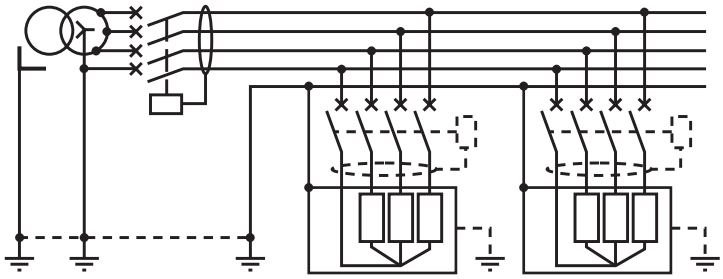

***Fig. E12** : TT system*

Note: If the exposed conductive parts are earthed at a number of points, an RCD must be installed for each set of circuits connected to a given earth electrode.

Main characteristics

■ Simplest solution to design and install. Used in installations supplied directly by the public LV distribution network.

■ Does not require continuous monitoring during operation (a periodic check on the RCDs may be necessary).

■ Protection is ensured by special devices, the residual current devices (RCD), which also prevent the risk of fire when they are set to ⩽ 500 mA.

■ Each insulation fault results in an interruption in the supply of power, however the outage is limited to the faulty circuit by installing the RCDs in series (selective RCDs) or in parallel (circuit selection).

■ Loads or parts of the installation which, during normal operation, cause high leakage currents, require special measures to avoid nuisance tripping, i.e. supply the loads with a separation transformer or use specific RCDs (see section 5.1 in chapter F).

The TN system:

■ *Technique for the protection of persons:*
□ *Interconnection and earthing of exposed conductive parts and the neutral are mandatory*
□ *Interruption for the first fault using overcurrent protection (circuit-breakers or fuses)*

■ *Operating technique: interruption for the first insulation fault*

TN system (see **Fig. E13** and **Fig. E14**)

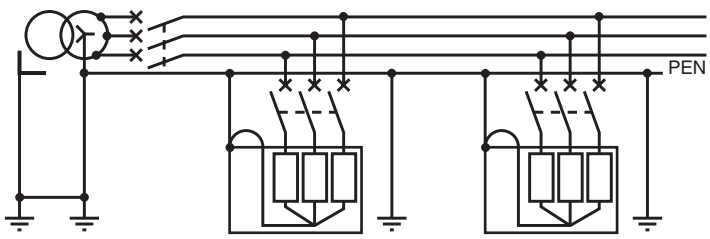

***Fig. E13** : TN-C system*

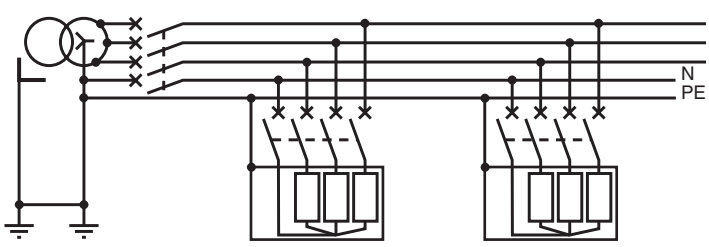

***Fig. E14** : TN-S system*

1 Earthing schemes

Main characteristics

■ Generally speaking, the TN system:
□ requires the installation of earth electrodes at regular intervals throughout the installation
□ Requires that the initial check on effective tripping for the first insulation fault be carried out by calculations during the design stage, followed by mandatory measurements to confirm tripping during commissioning
□ Requires that any modification or extension be designed and carried out by a qualified electrician
□ May result, in the case of insulation faults, in greater damage to the windings of rotating machines
□ May, on premises with a risk of fire, represent a greater danger due to the higher fault currents

■ In addition, the TN-C system:
□ At first glance, would appear to be less expensive (elimination of a device pole and of a conductor)
□ Requires the use of fixed and rigid conductors
□ Is forbidden in certain cases:
- Premises with a risk of fire
- For computer equipment (presence of harmonic currents in the neutral)

■ In addition, the TN-S system:
□ May be used even with flexible conductors and small conduits
□ Due to the separation of the neutral and the protection conductor, provides a clean PE (computer systems and premises with special risks)

IT system:
■ *Protection technique:*
□ *Interconnection and earthing of exposed conductive parts*
□ *Indication of the first fault by an insulation monitoring device (IMD)*
□ *Interruption for the second fault using overcurrent protection (circuit-breakers or fuses)*
■ *Operating technique:*
□ *Monitoring of the first insulation fault*
□ *Mandatory location and clearing of the fault*
□ *Interruption for two simultaneous insulation faults*

IT system (see **Fig. E15**)

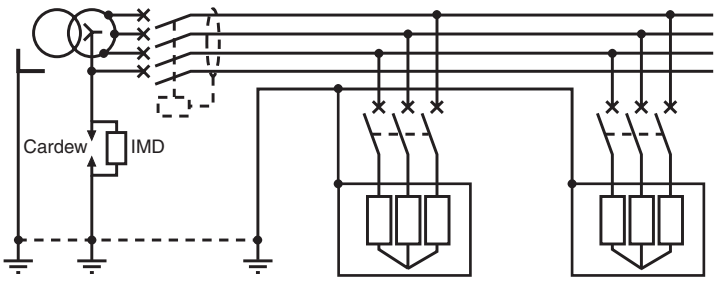

***Fig. E15** : IT system*

Main characteristics

■ Solution offering the best continuity of service during operation

■ Indication of the first insulation fault, followed by mandatory location and clearing, ensures systematic prevention of supply outages

■ Generally used in installations supplied by a private MV/LV or LV/LV transformer

■ Requires maintenance personnel for monitoring and operation

■ Requires a high level of insulation in the network (implies breaking up the network if it is very large and the use of circuit-separation transformers to supply loads with high leakage currents)

■ The check on effective tripping for two simultaneous faults must be carried out by calculations during the design stage, followed by mandatory measurements during commissioning on each group of interconnected exposed conductive parts

■ Protection of the neutral conductor must be ensured as indicated in section 7.2 of Chapter G

Selection does not depend on safety criteria. The three systems are equivalent in terms of protection of persons if all installation and operating rules are correctly followed. The selection criteria for the best system(s) depend on the regulatory requirements, the required continuity of service, operating conditions and the types of network and loads.

1.4 Selection criteria for the TT, TN and IT systems

In terms of the protection of persons, the three system earthing arrangements (SEA) are equivalent if all installation and operating rules are correctly followed. Consequently, selection does not depend on safety criteria.

It is by combining all requirements in terms of regulations, continuity of service, operating conditions and the types of network and loads that it is possible to determine the best system(s) (see **Fig. E16**).
Selection is determined by the following factors:
- Above all, the applicable regulations which in some cases impose certain types of SEA
- Secondly, the decision of the owner if supply is via a private MV/LV transformer (MV subscription) or the owner has a private energy source (or a separate-winding transformer)

If the owner effectively has a choice, the decision on the SEA is taken following discussions with the network designer (design office, contractor)
The discussions must cover:
- First of all, the operating requirements (the required level of continuity of service) and the operating conditions (maintenance ensured by electrical personnel or not, in-house personnel or outsourced, etc.)
- Secondly, the particular characteristics of the network and the loads

(see **Fig. E17** next page)

	TT	TN-S	TN-C	IT1	IT2	Comments
Electrical characteristics						
Fault current	-	- -	- -	+	- -	Only the IT system offers virtually negligible first-fault currents
Fault voltage	-	-	-	+	-	In the IT system, the touch voltage is very low for the first fault, but is considerable for the second
Touch voltage	+/- -	-	-	+	-	In the TT system, the touch voltage is very low if system is equipotential, otherwise it is high
Protection						
Protection of persons against indirect contact	+	+	+	+	+	All SEAs (system earthing arrangement) are equivalent, if the rules are followed
Protection of persons with emergency generating sets	+	-	-	+	-	Systems where protection is ensured by RCDs are not sensitive to a change in the internal impedance of the source
Protection against fire (with an RCD)	+	+	**Not allowed**	+	+	All SEAs in which RCDs can be used are equivalent. The TN-C system is forbidden on premises where there is a risk of fire
Overvoltages						
Continuous overvoltage	+	+	+	-	+	A phase-to-earth overvoltage is continuous in the IT system if there is a first insulation fault
Transient overvoltage	+	-	-	+	-	Systems with high fault currents may cause transient overvoltages
Overvoltage if transformer breakdown (primary/secondary)	-	+	+	+	+	In the TT system, there is a voltage imbalance between the different earth electrodes. The other systems are interconnected to a single earth electrode
Electromagnetic compatibility						
Immunity to nearby lightning strikes	-	+	+	+	+	In the TT system, there may be voltage imbalances between the earth electrodes. In the TT system, there is a significant current loop between the two separate earth electrodes
Immunity to lightning strikes on MV lines	-	-	-	-	-	All SEAs are equivalent when a MV line takes a direct lightning strike
Continuous emission of an electromagnetic field	+	+	-	+	+	Connection of the PEN to the metal structures of the building is conducive to the continuous generation of electromagnetic fields
Transient non-equipotentiality of the PE	+	-	-	+	-	The PE is no longer equipotential if there is a high fault current
Continuity of service						
Interruption for first fault	-	-	-	+	+	Only the IT system avoids tripping for the first insulation fault
Voltage dip during insulation fault	+	-	-	+	-	The TN-S, TNC and IT (2nd fault) systems generate high fault currents which may cause phase voltage dips
Installation						
Special devices	-	+	+	-	-	The TT system requires the use of RCDs. The IT system requires the use of IMDs
Number of earth electrodes	-	+	+	-/+	-/+	The TT system requires two distinct earth electrodes. The IT system offers a choice between one or two earth electrodes
Number of cables	-	-	+	-	-	Only the TN-C system offers, in certain cases, a reduction in the number of cables
Maintenance						
Cost of repairs	-	- -	- -	-	- -	The cost of repairs depends on the damage caused by the amplitude of the fault currents
Installation damage	+	-	-	++	-	Systems causing high fault currents require a check on the installation after clearing the fault

***Fig. E16** : Comparison of system earthing arrangements*

1 Earthing schemes

Type of network		Advised	Possible	Not advised
Very large network with high-quality earth electrodes for exposed conductive parts (10 Ω max.)			TT, TN, IT (1) or mixed	
Very large network with low-quality earth electrodes for exposed conductive parts (> 30 Ω)		TN	TN-S	IT (1) TN-C
Disturbed area (storms) (e.g. television or radio transmitter)		TN	TT	IT (2)
Network with high leakage currents (> 500 mA)	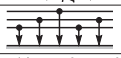	TN (4)	IT (4) TT (3) (4)	
Network with outdoor overhead lines	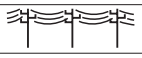	TT (5)	TN (5) (6)	IT (6)
Emergency standby generator set		IT	TT	TN (7)
Type of loads				
Loads sensitive to high fault currents (motors, etc.)		IT	TT	TN (8)
Loads with a low insulation level (electric furnaces, welding machines, heating elements, immersion heaters, equipment in large kitchens)		TN (9)	TT (9)	IT
Numerous phase-neutral single-phase loads (mobile, semi-fixed, portable)		TT (10) TN-S		IT (10) TN-C (10)
Loads with sizeable risks (hoists, conveyers, etc.)		TN (11)	TT (11)	IT (11)
Numerous auxiliaries (machine tools)		TN-S	TN-C IT (12 bis)	TT (12)
Miscellaneous				
Supply via star-star connected power transformer (13)		TT	IT without neutral	IT (13) with neutral
Premises with risk of fire		IT (15)	TN-S (15) TT (15)	TN-C (14)
Increase in power level of LV utility subscription, requiring a private substation		TT (16)		
Installation with frequent modifications	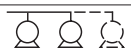	TT (17)		TN (18) IT (18)
Installation where the continuity of earth circuits is uncertain (work sites, old installations)		TT (19)	TN-S	TN-C IT (19)
Electronic equipment (computers, PLCs)		TN-S	TT	TN-C
Machine control-monitoring network, PLC sensors and actuators		IT (20)	TN-S, TT	

(1) When the SEA is not imposed by regulations, it is selected according to the level of operating characteristics (continuity of service that is mandatory for safety reasons or desired to enhance productivity, etc.)
Whatever the SEA, the probability of an insulation failure increases with the length of the network. It may be a good idea to break up the network, which facilitates fault location and makes it possible to implement the system advised above for each type of application.
(2) The risk of flashover on the surge limiter turns the isolated neutral into an earthed neutral. These risks are high for regions with frequent thunder storms or installations supplied by overhead lines. If the IT system is selected to ensure a higher level of continuity of service, the system designer must precisely calculate the tripping conditions for a second fault.
(3) Risk of RCD nuisance tripping.
(4) Whatever the SEA, the ideal solution is to isolate the disturbing section if it can be easily identified.
(5) Risks of phase-to-earth faults affecting equipotentiality.
(6) Insulation is uncertain due to humidity and conducting dust.
(7) The TN system is not advised due to the risk of damage to the generator in the case of an internal fault. What is more, when generator sets supply safety equipment, the system must not trip for the first fault.
(8) The phase-to-earth current may be several times higher than In, with the risk of damaging or accelerating the ageing of motor windings, or of destroying magnetic circuits.
(9) To combine continuity of service and safety, it is necessary and highly advised, whatever the SEA, to separate these loads from the rest of the installation (transformers with local neutral connection).
(10) When load equipment quality is not a design priority, there is a risk that the insulation resistance will fall rapidly. The TT system with RCDs is the best means to avoid problems.
(11) The mobility of this type of load causes frequent faults (sliding contact for bonding of exposed conductive parts) that must be countered. Whatever the SEA, it is advised to supply these circuits using transformers with a local neutral connection.
(12) Requires the use of transformers with a local TN system to avoid operating risks and nuisance tripping at the first fault (TT) or a double fault (IT).
(12 bis) With a double break in the control circuit.
(13) Excessive limitation of the phase-to-neutral current due to the high value of the zero-phase impedance (at least 4 to 5 times the direct impedance). This system must be replaced by a star-delta arrangement.
(14) The high fault currents make the TN system dangerous. The TN-C system is forbidden.
(15) Whatever the system, the RCD must be set to $\Delta n \leqslant 500$ mA.
(16) An installation supplied with LV energy must use the TT system. Maintaining this SEA means the least amount of modifications on the existing network (no cables to be run, no protection devices to be modified).
(17) Possible without highly competent maintenance personnel.
(18) This type of installation requires particular attention in maintaining safety. The absence of preventive measures in the TN system means highly qualified personnel are required to ensure safety over time.
(19) The risks of breaks in conductors (supply, protection) may cause the loss of equipotentiality for exposed conductive parts. A TT system or a TN-S system with 30 mA RCDs is advised and is often mandatory. The IT system may be used in very specific cases.
(20) This solution avoids nuisance tripping for unexpected earth leakage.

***Fig. E17** : Influence of networks and loads on the selection of system earthing arrangements*

1.5 Choice of earthing method - implementation

After consulting applicable regulations, Figures E16 and E17 can be used as an aid in deciding on divisions and possible galvanic isolation of appropriate sections of a proposed installation.

Division of source

This technique concerns the use of several transformers instead of employing one high-rated unit. In this way, a load that is a source of network disturbances (large motors, furnaces, etc.) can be supplied by its own transformer.
The quality and continuity of supply to the whole installation are thereby improved.
The cost of switchgear is reduced (short-circuit current level is lower).
The cost-effectiveness of separate transformers must be determined on a case by case basis.

Network islands

The creation of galvanically-separated “islands” by means of LV/LV transformers makes it possible to optimise the choice of earthing methods to meet specific requirements (see **Fig. E18** and **Fig. E19**).

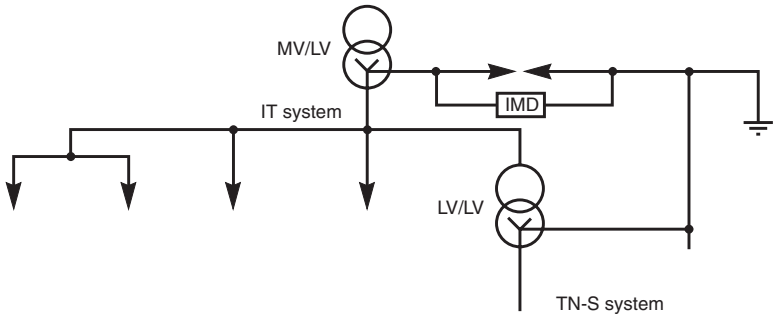

Fig. E18 : TN-S island within an IT system

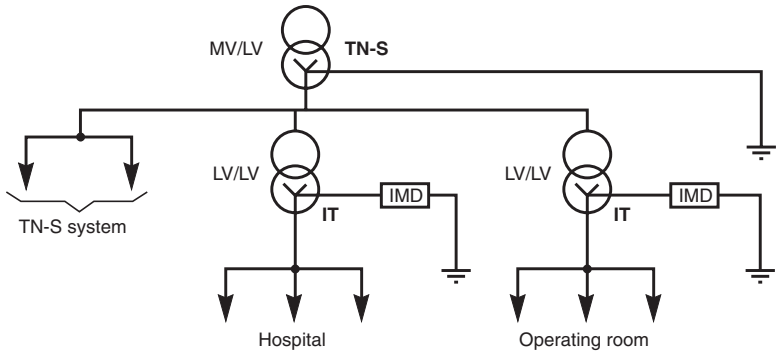

Fig. E19 : IT islands within a TN-S system

Conclusion

The optimisation of the performance of the whole installation governs the choice of earthing system.

Including:

- Initial investments, and
- Future operational expenditures, hard to assess, that can arise from insufficient reliability, quality of equipment, safety, continuity of service, etc.

An ideal structure would comprise normal power supply sources, local reserve power supply sources (see section 1.4 of Chapter E) and the appropriate earthing arrangements.

A very effective method of obtaining a low-resistance earth connection is to bury a conductor in the form of a closed loop in the soil at the bottom of the excavation for building foundations.
The resistance R of such an electrode (in homogeneous soil) is given (approximately) in ohms by: $R = \frac{2\rho}{L}$ *where*

L = length of the buried conductor in metres
ρ = soil resistivity in ohm-metres

For n rods: $R = \frac{1}{n}\frac{\rho}{L}$

1.6 Installation and measurements of earth electrodes

The quality of an earth electrode (resistance as low as possible) depends essentially on two factors:
- Installation method
- Type of soil

Installation methods

Three common types of installation will be discussed:

Buried ring (see **Fig. E20**)

This solution is strongly recommended, particularly in the case of a new building. The electrode should be buried around the perimeter of the excavation made for the foundations. It is important that the bare conductor be in intimate contact with the soil (and not placed in the gravel or aggregate hard-core, often forming a base for concrete). At least four (widely-spaced) vertically arranged conductors from the electrode should be provided for the installation connections and, where possible, any reinforcing rods in concrete work should be connected to the electrode.

The conductor forming the earth electrode, particularly when it is laid in an excavation for foundations, must be in the earth, at least 50 cm below the hard-core or aggregate base for the concrete foundation. Neither the electrode nor the vertical rising conductors to the ground floor, should ever be in contact with the foundation concrete.

For existing buildings, the electrode conductor should be buried around the outside wall of the premises to a depth of at least 1 metre. As a general rule, all vertical connections from an electrode to above-ground level should be insulated for the nominal LV voltage (600-1,000 V).

The conductors may be:
- Copper: Bare cable ($\geqslant 25$ mm^2) or multiple-strip ($\geqslant 25$ mm^2 and $\geqslant 2$ mm thick)
- Aluminium with lead jacket: Cable ($\geqslant 35$ mm^2)
- Galvanised-steel cable: Bare cable ($\geqslant 95$ mm^2) or multiple-strip ($\geqslant 100$ mm^2 and $\geqslant 3$ mm thick)

The approximate resistance R of the electrode in ohms:

$$R = \frac{2\rho}{L}$$

where
L = length of conductor in metres
ρ = resistivity of the soil in ohm-metres (see "Influence of the type of soil" next page)

Earthing rods (see **Fig. E21**)

Vertically driven earthing rods are often used for existing buildings, and for improving (i.e. reducing the resistance of) existing earth electrodes.

The rods may be:
- Copper or (more commonly) copper-clad steel. The latter are generally 1 or 2 metres long and provided with screwed ends and sockets in order to reach considerable depths, if necessary (for instance, the water-table level in areas of high soil resistivity)
- Galvanised (see note (1) next page) steel pipe $\geqslant 25$ mm diameter or rod $\geqslant 15$ mm diameter, $\geqslant 2$ metres long in each case.

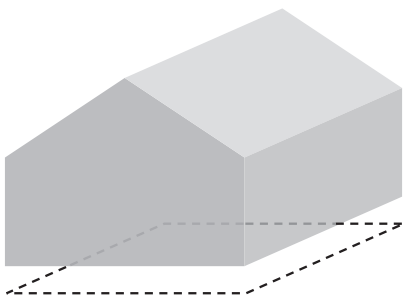

Fig. E20 *: Conductor buried below the level of the foundations, i.e. not in the concrete*

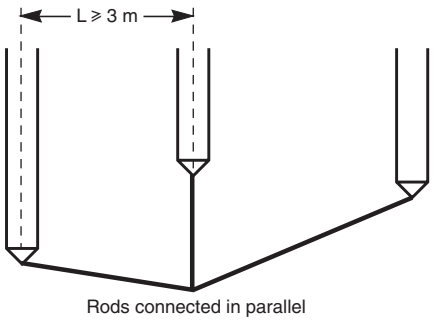

Fig. E21 *: Earthing rods*

1 Earthing schemes

It is often necessary to use more than one rod, in which case the spacing between them should exceed the depth to which they are driven, by a factor of 2 to 3.

The total resistance (in homogeneous soil) is then equal to the resistance of one rod, divided by the number of rods in question. The approximate resistance R obtained is:

$R = \frac{1}{n}\frac{\rho}{L}$ if the distance separating the rods > 4L

where
L = the length of the rod in metres
ρ = resistivity of the soil in ohm-metres (see "Influence of the type of soil" below)
n = the number of rods

Vertical plates (see **Fig. E22**)

For a vertical plate electrode: $R = \frac{0.8\ \rho}{L}$

Rectangular plates, each side of which must be ⩾ 0.5 metres, are commonly used as earth electrodes, being buried in a vertical plane such that the centre of the plate is at least 1 metre below the surface of the soil.

The plates may be:
- Copper of 2 mm thickness
- Galvanised (1) steel of 3 mm thickness

The resistance R in ohms is given (approximately), by:

$R = \frac{0.8\ \rho}{L}$

L = the perimeter of the plate in metres
ρ = resistivity of the soil in ohm-metres (see "Influence of the type of soil" below)

Influence of the type of soil

Measurements on earth electrodes in similar soils are useful to determine the resistivity value to be applied for the design of an earth-electrode system

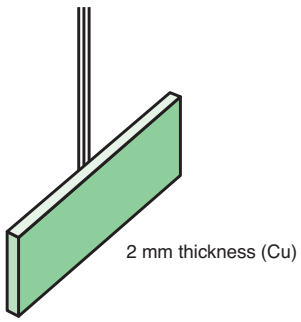

Fig. E22 : Vertical plate

Type of soil	Mean value of resistivity in Ωm
Swampy soil, bogs	1 - 30
Silt alluvium	20 - 100
Humus, leaf mould	10 - 150
Peat, turf	5 - 100
Soft clay	50
Marl and compacted clay	100 - 200
Jurassic marl	30 - 40
Clayey sand	50 - 500
Siliceous sand	200 - 300
Stoney ground	1,500 - 3,000
Grass-covered-stoney sub-soil	300 - 500
Chalky soil	100 - 300
Limestone	1,000 - 5,000
Fissured limestone	500 - 1,000
Schist, shale	50 - 300
Mica schist	800
Granite and sandstone	1,500 - 10,000
Modified granite and sandstone	100 - 600

Fig. E23 : Resistivity (Ωm) for different types of soil

Type of soil	Average value of resistivity in Ωm
Fertile soil, compacted damp fill	50
Arid soil, gravel, uncompacted non-uniform fill	500
Stoney soil, bare, dry sand, fissured rocks	3,000

Fig. E24 : Average resistivity (Ωm) values for approximate earth-elect

(1) Where galvanised conducting materials are used for earth electrodes, sacrificial cathodic protection anodes may be necessary to avoid rapid corrosion of the electrodes where the soil is aggressive. Specially prepared magnesium anodes (in a porous sack filled with a suitable "soil") are available for direct connection to the electrodes. In such circumstances, a specialist should be consulted

1 Earthing schemes

Measurement and constancy of the resistance between an earth electrode and the earth

The resistance of the electrode/earth interface rarely remains constant

Among the principal factors affecting this resistance are the following:

- Humidity of the soil

The seasonal changes in the moisture content of the soil can be significant at depths of up to 2 meters.
At a depth of 1 metre the resistivity and therefore the resistance can vary by a ratio of 1 to 3 between a wet winter and a dry summer in temperate regions

- Frost

Frozen earth can increase the resistivity of the soil by several orders of magnitude. This is one reason for recommending the installation of deep electrodes, in particular in cold climates

- Ageing

The materials used for electrodes will generally deteriorate to some extent for various reasons, for example:

- Chemical reactions (in acidic or alkaline soils)
- Galvanic: due to stray DC currents in the earth, for example from electric railways, etc. or due to dissimilar metals forming primary cells. Different soils acting on sections of the same conductor can also form cathodic and anodic areas with consequent loss of surface metal from the latter areas. Unfortunately, the most favourable conditions for low earth-electrode resistance (i.e. low soil resistivity) are also those in which galvanic currents can most easily flow.

- Oxidation

Brazed and welded joints and connections are the points most sensitive to oxidation. Thorough cleaning of a newly made joint or connection and wrapping with a suitable greased-tape binding is a commonly used preventive measure.

Measurement of the earth-electrode resistance

There must always be one or more removable links to isolate an earth electrode so that it can be tested.

There must always be removable links which allow the earth electrode to be isolated from the installation, so that periodic tests of the earthing resistance can be carried out. To make such tests, two auxiliary electrodes are required, each consisting of a vertically driven rod.

- Ammeter method (see **Fig. E25**)

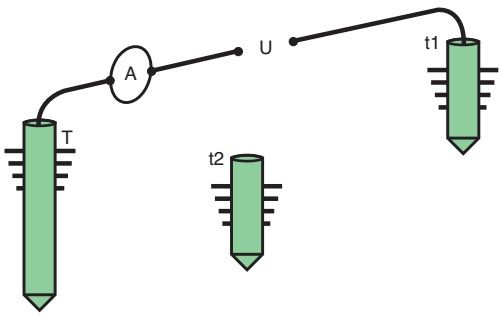

Fig. E25 : Measurement of the resistance to earth of the earth electrode of an installation by means of an ammeter

$$A = R_T + R_{t1} = \frac{U_{Tt1}}{i_1}$$

$$B = R_{t1} + R_{t2} = \frac{U_{t1t2}}{i_2}$$

$$C = R_{t2} + R_T = \frac{U_{t2T}}{i_3}$$

When the source voltage U is constant (adjusted to be the same value for each test) then:

$$R_T = \frac{U}{2}\left(\frac{1}{i_1} + \frac{1}{i_3} - \frac{1}{i_2}\right)$$

1 Earthing schemes

In order to avoid errors due to stray earth currents (galvanic -DC- or leakage currents from power and communication networks and so on) the test current should be AC, but at a different frequency to that of the power system or any of its harmonics. Instruments using hand-driven generators to make these measurements usually produce an AC voltage at a frequency of between 85 Hz and 135 Hz.

The distances between the electrodes are not critical and may be in different directions from the electrode being tested, according to site conditions. A number of tests at different spacings and directions are generally made to cross-check the test results.

■ Use of a direct-reading earthing-resistance ohmmeter

These instruments use a hand-driven or electronic-type AC generator, together with two auxiliary electrodes, the spacing of which must be such that the zone of influence of the electrode being tested should not overlap that of the test electrode (C). The test electrode (C) furthest from the electrode (X) under test, passes a current through the earth and the electrode under test, while the second test electrode (P) picks up a voltage. This voltage, measured between (X) and (P), is due to the test current and is a measure of the contact resistance (of the electrode under test) with earth. It is clear that the distance (X) to (P) must be carefully chosen to give accurate results. If the distance (X) to (C) is increased, however, the zones of resistance of electrodes (X) and (C) become more remote, one from the other, and the curve of potential (voltage) becomes more nearly horizontal about the point (O).

In practical tests, therefore, the distance (X) to (C) is increased until readings taken with electrode (P) at three different points, i.e. at (P) and at approximately 5 metres on either side of (P), give similar values. The distance (X) to (P) is generally about 0.68 of the distance (X) to (C).

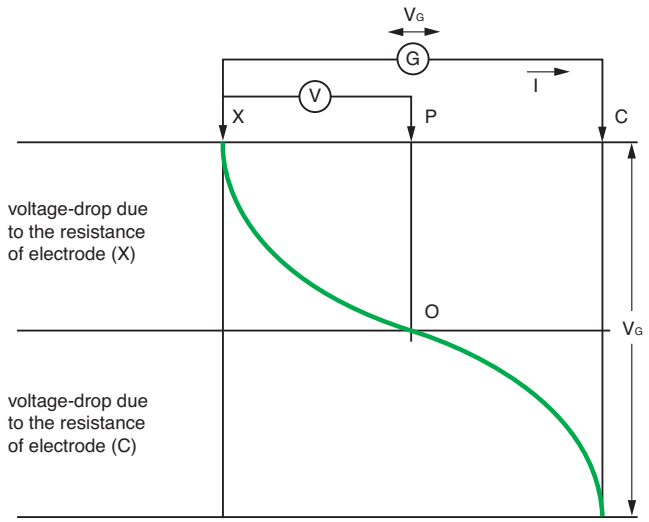

a) the principle of measurement is based on assumed homogeneous soil conditions. Where the zones of influence of electrodes C and X overlap, the location of test electrode P is difficult to determine for satisfactory results.

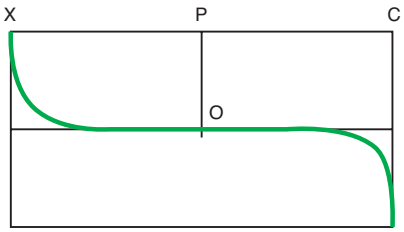

b) showing the effect on the potential gradient when (X) and (C) are widely spaced. The location of test electrode P is not critical and can be easily determined.

***Fig. E26** : Measurement of the resistance to the mass of earth of electrode (X) using an earth-electrode-testing ohmmeter.*

2 The installation system

2.1 Distribution boards

Distribution boards, including the main LV switchboard (MLVS), are critical to the dependability of an electrical installation. They must comply with well-defined standards governing the design and construction of LV switchgear assemblies

A distribution board is the point at which an incoming-power supply divides into separate circuits, each of which is controlled and protected by the fuses or switchgear of the board. A distribution board is divided into a number of functional units, each comprising all the electrical and mechanical elements that contribute to the fulfilment of a given function. It represents a key link in the dependability chain.

Consequently, the type of distribution board must be perfectly adapted to its application. Its design and construction must comply with applicable standards and working practises.

The distribution board enclosure provides dual protection:

- Protection of switchgear, indicating instruments, relays, fusegear, etc. against mechanical impacts, vibrations and other external influences likely to interfere with operational integrity (EMI, dust, moisture, vermin, etc.)
- The protection of human life against the possibility of direct and indirect electric shock (see degree of protection IP and the IK index in section 3.3 of Chapter E).

Types of distribution boards

Distribution boards may differ according to the kind of application and the design principle adopted (notably in the arrangement of the busbars).

The load requirements dictate the type of distribution board to be installed

Distribution boards according to specific applications

The principal types of distribution boards are:

- The main LV switchboard - MLVS - (see **Fig. E27a**)
- Motor control centres - MCC - (see **Fig. E27b**)
- Sub-distribution boards (see **Fig. E28**)
- Final distribution boards (see **Fig. E29**)

Distribution boards for specific applications (e.g. heating, lifts, industrial processes) can be located:

- Adjacent to the main LV switchboard, or
- Near the application concerned

Sub-distribution and final distribution boards are generally distributed throughout the site.

a



b



*Fig. E27 : **[a]** A main LV switchboard - MLVS - (Prisma Plus P) with incoming circuits in the form of busways - **[b]** A LV motor control centre - MCC - (Okken)*



Fig. E28 : A sub-distribution board (Prisma Plus G)

a



b



c



*Fig. E29 : Final distribution boards **[a]** Prisma Plus G Pack; **[b]** Kaedra; **[c]** mini-Pragma*

A distinction is made between:
- *Traditional distribution boards in which switchgear and fusegear, etc. are fixed to a chassis at the rear of an enclosure*
- *Functional distribution boards for specific applications, based on modular and standardised design.*

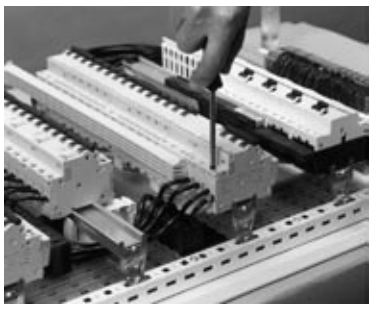

***Fig. E30** : Assembly of a final distribution board with fixed functional units (Prisma Plus G)*



***Fig. E31** : Distribution board with disconnectable functional units*



***Fig. E32** : Distribution board with withdrawable functional units in drawers*

Two technologies of distribution boards

Traditional distribution boards

Switchgear and fusegear, etc. are normally located on a chassis at the rear of the enclosure. Indications and control devices (meters, lamps, pushbuttons, etc.) are mounted on the front face of the board.
The placement of the components within the enclosure requires very careful study, taking into account the dimensions of each item, the connections to be made to it, and the clearances necessary to ensure safe and trouble-free operation. .

Functional distribution boards

Generally dedicated to specific applications, these distribution boards are made up of functional modules that include switchgear devices together with standardised accessories for mounting and connections, ensuring a high level of reliability and a great capacity for last-minute and future changes.

■ Many advantages

The use of functional distribution boards has spread to all levels of LV electrical distribution, from the main LV switchboard (MLVS) to final distribution boards, due to their many advantages:

□ System modularity that makes it possible to integrate numerous functions in a single distribution board, including protection, control, technical management and monitoring of electrical installations. Modular design also enhances distribution board maintenance, operation and upgrades

□ Distribution board design is fast because it simply involves adding functional modules

□ Prefabricated components can be mounted faster

□ Finally, these distribution boards are subjected to type tests that ensure a high degree of dependability.

The new Prisma Plus G and P ranges of functional distribution boards from Schneider Electric cover needs up to 3200 A and offer:

□ Flexibility and ease in building distribution boards

□ Certification of a distribution board complying with standard IEC 60439 and the assurance of servicing under safe conditions

□ Time savings at all stages, from design to installation, operation and modifications or upgrades

□ Easy adaptation, for example to meet the specific work habits and standards in different countries

Figures E27a, E28 and E29 show examples of functional distribution boards ranging for all power ratings and figure E27b shows a high-power industrial functional distribution board.

■ Main types of functional units

Three basic technologies are used in functional distribution boards.

□ Fixed functional units (see **Fig. E30**)

These units cannot be isolated from the supply so that any intervention for maintenance, modifications and so on, requires the shutdown of the entire distribution board. Plug-in or withdrawable devices can however be used to minimise shutdown times and improve the availability of the rest of the installation.

□ Disconnectable functional units (see **Fig. E31**)

Each functional unit is mounted on a removable mounting plate and provided with a means of isolation on the upstream side (busbars) and disconnecting facilities on the downstream (outgoing circuit) side. The complete unit can therefore be removed for servicing, without requiring a general shutdown.

□ Drawer-type withdrawable functional units (see **Fig. E32**)

The switchgear and associated accessories for a complete function are mounted on a drawer-type horizontally withdrawable chassis. The function is generally complex and often concerns motor control.
Isolation is possible on both the upstream and downstream sides by the complete withdrawal of the drawer, allowing fast replacement of a faulty unit without de-energising the rest of the distribution board.

2 The installation system

Compliance with applicable standards is essential in order to ensure an adequate degree of dependability

Three elements of standard IEC 60439-1 contribute significantly to dependability:
- *Clear definition of functional units*
- *Forms of separation between adjacent functional units in accordance with user requirements*
- *Clearly defined routine tests and type tests*

Standards

Different standards

Certain types of distribution boards (in particular, functional distribution boards) must comply with specific standards according to the application or environment involved.

The reference international standard is IEC 60439-1 type-tested and partially type-tested assemblies

Standard IEC 60439-1

■ Categories of assemblies

Standard IEC 60439-1 distinguishes between two categories of assemblies:
- □ Type-tested LV switchgear and controlgear assemblies (TTA), which do not diverge significantly from an established type or system for which conformity is ensured by the type tests provided in the standard
- □ Partially type-tested LV switchgear and controlgear assemblies (PTTA), which may contain non-type-tested arrangements provided that the latter are derived from type-tested arrangements

When implemented in compliance with professional work standards and manufacturer instructions by qualified personnel, they offer the same level of safety and quality.

■ Functional units

The same standard defines functional units:
- □ Part of an assembly comprising all the electrical and mechanical elements that contribute to the fulfilment of the same function
- □ The distribution board includes an incoming functional unit and one or more functional units for outgoing circuits, depending on the operating requirements of the installation

What is more, distribution board technologies use functional units that may be fixed, disconnectable or withdrawable (see section 3.1 of Chapter E).

■ Forms (see **Fig. E33**)

Separation of functional units within the assembly is provided by forms that are specified for different types of operation.

The various forms are numbered from 1 to 4 with variations labelled “a” or “b”. Each step up (from 1 to 4) is cumulative, i.e. a form with a higher number includes the characteristics of forms with lower numbers. The standard distinguishes:
- □ Form 1: No separation
- □ Form 2: Separation of busbars from the functional units
- □ Form 3: Separation of busbars from the functional units and separation of all functional units, one from another, except at their output terminals
- □ Form 4: As for Form 3, but including separation of the outgoing terminals of all functional units, one from another

The decision on which form to implement results from an agreement between the manufacturer and the user.

The Prima Plus functional range offers solutions for forms 1, 2b, 3b, 4a, 4b.

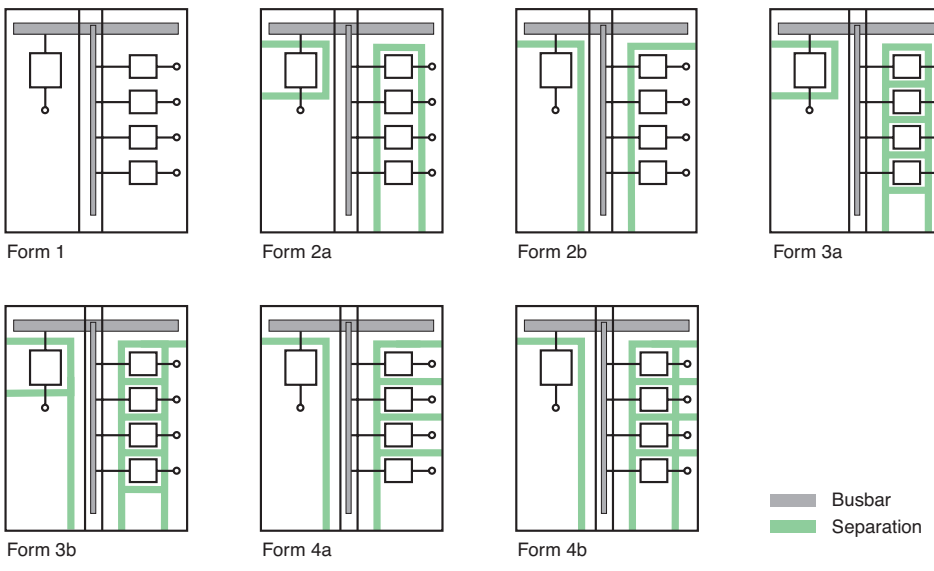

***Fig. E33** : Representation of different forms of LV functional distribution boards*

■ Type tests and routine tests
They ensure compliance of each distribution board with the standard. The availability of test documents certified by independent organisations is a guarantee for users.

Total accessibility of electrical information and intelligent distribution boards are now a reality

Remote monitoring and control of the electrical installation

Remote monitoring and control are no longer limited to large installations.
These functions are increasingly used and provide considerable cost savings.
The main potential advantages are:

■ Reductions in energy bills

■ Reductions in structural costs to maintain the installation in running order

■ Better use of the investment, notably concerning optimisation of the installation life cycle

■ Greater satisfaction for energy users (in a building or in process industries) due to improved power availability and/or quality

The above possibilities are all the more an option given the current deregulation of the electrical-energy sector.

Modbus is increasingly used as the open standard for communication within the distribution board and between the distribution board and customer power monitoring and control applications. Modbus exists in two forms, twisted pair (RS 485) and Ethernet-TCP/IP (IEEE 802.3).

The www.modbus.org site presents all bus specifications and constantly updates the list of products and companies using the open industrial standard.

The use of web technologies has largely contributed to wider use by drastically reducing the cost of accessing these functions through the use of an interface that is now universal (web pages) and a degree of openness and upgradeability that simply did not exist just a few years ago.

2.2 Cables and busway trunking

Two types of distribution are possible:
■ *By insulated wires and cables*
■ *By busbar trunking (busways)*

Distribution by insulated conductors and cables

Definitions

■ Conductor



A conductor comprises a single metallic core with or without an insulating envelope.

■ Cable



A cable is made up of a number of conductors, electrically separated, but joined mechanically, generally enclosed in a protective flexible sheath.

■ Cableway



The term cableway refers to conductors and/or cables together with the means of support and protection, etc. for example : cable trays, ladders, ducts, trenches, and so on… are all “cableways”.

Conductor marking

Conductor identification must always respect the following three rules:

■ Rule 1
The double colour green and yellow is strictly reserved for the PE and PEN protection conductors.

■ Rule 2
□ When a circuit comprises a neutral conductor, it must be light blue or marked “1” for cables with more than five conductors
□ When a circuit does not have a neutral conductor, the light blue conductor may be used as a phase conductor if it is part of a cable with more than one conductor

■ Rule 3
Phase conductors may be any colour except:
□ Green and yellow
□ Green
□ Yellow
□ Light blue (see rule 2)

2 The installation system

Conductors in a cable are identified either by their colour or by numbers (see **Fig. E34**).

Number of conductors in circuit	Circuit	Fixed cableways									
		Insulated conductors					Rigid and flexible multi-conductor cables				
		Ph	Ph	Pn	N	PE	Ph	Ph	Ph	N	PE
1	Protection or earth					G/Y					
2	Single-phase between phases	■	■				BL	LB			
	Single-phase between phase and neutral	■			LB		BL			LB	
	Single-phase between phase and neutral + protection conductor	■			G/Y		BL			G/Y	
3	Three-phase without neutral	■	■	■			BL	B	LB		
	2 phases + neutral	■	■		LB		BL	B		LB	
	2 phases + protection conductor	■	■			G/Y	BL	LB			G/Y
	Single-phase between phase and neutral + protection conductor	■			LB	G/Y	BL			LB	G/Y
4	Three-phase with neutral	■	■	■	LB		BL	B	BL	LB	
	Three-phase with neutral + protection conductor	■	■	■		G/Y	BL	B	LB		G/Y
	2 phases + neutral + protection conductor	■	■		LB	G/Y	BL	B		LB	G/Y
	Three-phase with PEN conductor	■	■	■	G/Y		BL	B	LB	G/Y	
5	Three-phase + neutral + protection conductor	■	■	■	LB	G/Y	BL	B	BL	LB	G/Y
> 5		Protection conductor: G/Y - Other conductors: BL: with numbering The number “1” is reserved for the neutral conductor if it exists									

G/Y: Green and yellow BL: Black ■ : As indicated in rule 3 LB: Light blue B: Brown

Fig. E34 : Conductor identification according to the type of circuit

Note: If the circuit includes a protection conductor and if the available cable does not have a green and yellow conductor, the protection conductor may be:

- A separate green and yellow conductor
- The blue conductor if the circuit does not have a neutral conductor
- A black conductor if the circuit has a neutral conductor

In the last two cases, the conductor used must be marked by green and yellow bands or markings at the ends and on all visible lengths of the conductor.

Equipment power cords are marked similar to multi-conductor cables (see **Fig. E35**).

Distribution and installation methods (see **Fig. E36**)

Distribution takes place via cableways that carry single insulated conductors or cables and include a fixing system and mechanical protection.

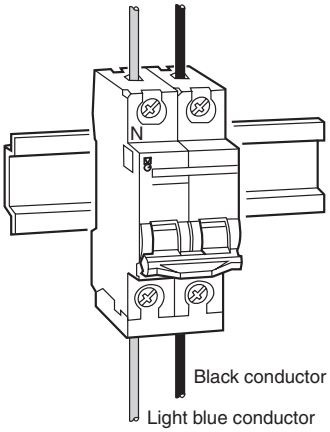

Fig. E35 : Conductor identification on a circuit-breaker with a phase and a neutral

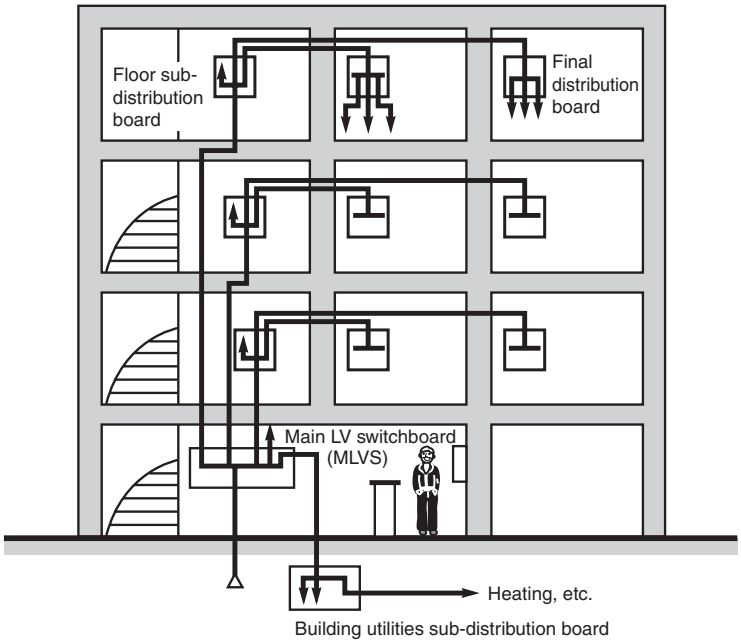

Fig. E36 : Radial distribution using cables in a hotel

Busways, also referred to as busbar trunking systems, stand out for their ease of installation, flexibility and number of possible connection points

Busbar trunking (busways)

Busbar trunking is intended to distribute power (from 40 A to 5000 A) and lighting (in this application, the busbar trunking plays a dual role of supplying electrical power and physically holding the lights).

Busbar trunking system components

A **busbar trunking** system comprises a set of conductors protected by an enclosure (see **Fig. E37**). Used for the transmission and distribution of electrical power, busbar trunking systems have all the necessary features for fitting: connectors, straights, angles, fixings, etc. The tap-off points placed at regular intervals make power available at every point in the installation.

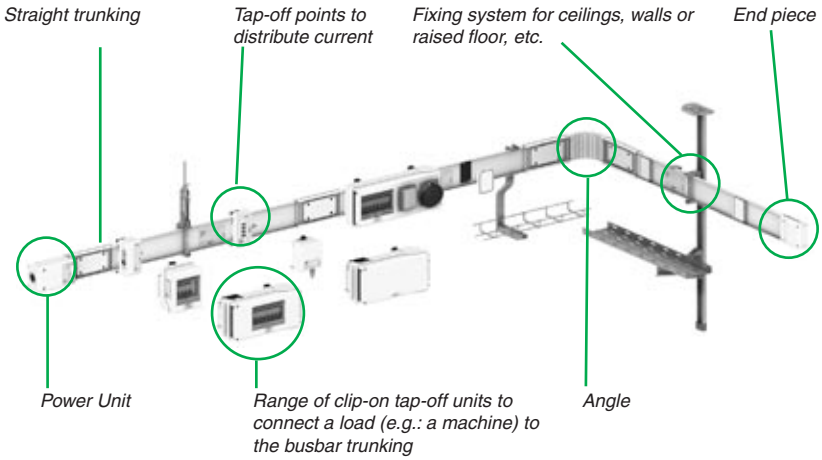

Fig. E37 *: Busbar trunking system design for distribution of currents from 25 to 4000A.*

The various types of busbar trunking:

Busbar trunking systems are present at every level in electrical distribution: from the link between the transformer and the low voltage switch board (MLVS) to the distribution of power sockets and lighting to offices, or power distribution to workshops.

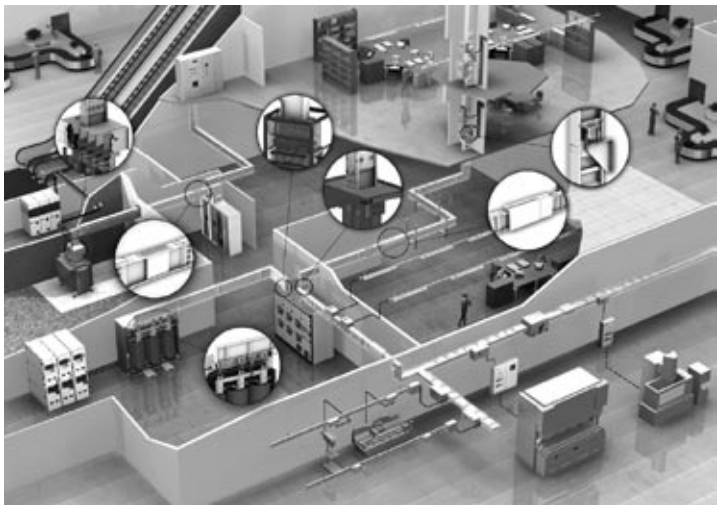

Fig. E38 *: Radial distribution using busways*

We talk about a distributed network architecture.

2 The installation system

There are essentially three categories of busways.

■ Transformer to MLVS busbar trunking

Installation of the busway may be considered as permanent and will most likely never be modified. There are no tap-off points.

Frequently used for short runs, it is almost always used for ratings above 1,600 / 2,000 A, i.e. when the use of parallel cables makes installation impossible. Busways are also used between the MLVS and downstream distribution boards.

The characteristics of main-distribution busways authorize operational currents from 1,000 to 5,000 A and short-circuit withstands up to 150 kA.

■ Sub-distribution busbar trunking with low or high tap-off densities

Downstream of main-distribution busbar trunking , two types of applications must be supplied:

□ Mid-sized premises (industrial workshops with injection presses and metalwork machines or large supermarkets with heavy loads). The short-circuit and current levels can be fairly high (respectively 20 to 70 kA and 100 to 1,000 A)

□ Small sites (workshops with machine-tools, textile factories with small machines, supermarkets with small loads). The short-circuit and current levels are lower (respectively 10 to 40 kA and 40 to 400 A)

Sub-distribution using busbar trunking meets user needs in terms of:

□ Modifications and upgrades given the high number of tap-off points

□ Dependability and continuity of service because tap-off units can be connected under energized conditions in complete safety

The sub-distribution concept is also valid for vertical distribution in the form of 100 to 5,000 A risers in tall buildings.

■ Lighting distribution busbar trunking

Lighting circuits can be distributed using two types of busbar trunking according to whether the lighting fixtures are suspended from the busbar trunking or not.

□ busbar trunking designed for the suspension of lighting fixtures

These busways supply and support light fixtures (industrial reflectors, discharge lamps, etc.). They are used in industrial buildings, supermarkets, department stores and warehouses. The busbar trunkings are very rigid and are designed for one or two 25 A or 40 A circuits. They have tap-off outlets every 1.5 m.

□ busbar trunking not designed for the suspension of lighting fixtures

Similar to prefabricated cable systems, these busways are used to supply all types of lighting fixtures secured to the building structure. They are used in commercial buildings (offices, shops, restaurants, hotels, etc.), especially in false ceilings. The busbar trunking is flexible and designed for one 20 A circuit. It has tap-off outlets every 1.5 m or 3 m.

Busbar trunking systems are suited to the requirements of a large number of buildings.

■ Industrial buildings: garages, workshops, farm buildings, logistic centers, etc....
■ Commercial areas: stores, shopping malls, supermarkets, hotels, etc.
■ Tertiary buildings: offices, schools, hospitals, sports rooms, cruise liners, etc.

Standards

Busbar trunking systems must meet all rules stated in IEC 439-2.

This defines the manufacturing arrangements to be complied with in the design of busbar trunking systems (e.g.: temperature rise characteristics, short-circuit withstand, mechanical strength, etc.) as well as test methods to check them.

Standard IEC 439-2 defines 13 compulsory type-tests on configurations or system components..

By assembling the system components on the site according to the assembly instructions, the contractor benefits from conformity with the standard.

The advantages of busbar trunking systems

Flexibility

■ Easy to change configuration (on-site modification to change production line configuration or extend production areas).
■ Reusing components (components are kept intact): when an installation is subject to major modifications, the busbar trunking is easy to dismantle and reuse.
■ Power availability throughout the installation (possibility of having a tap-off point every meter).
■ Wide choice of tap-off units.

Simplicity

- Design can be carried out independently from the distribution and layout of current consumers.
- Performances are independent of implementation: the use of cables requires a lot of derating coefficients.
- Clear distribution layout
- Reduction of fitting time: the trunking system allows fitting times to be reduced by up to 50% compared with a traditional cable installation.
- Manufacturer's guarantee.
- Controlled execution times: the trunking system concept guarantees that there are no unexpected surprises when fitting. The fitting time is clearly known in advance and a quick solution can be provided to any problems on site with this adaptable and scalable equipment.
- Easy to implement: modular components that are easy to handle, simple and quick to connect.

Dependability

- Reliability guaranteed by being factory-built
- Fool-proof units
- Sequential assembly of straight components and tap-off units making it impossible to make any mistakes

Continuity of service

- The large number of tap-off points makes it easy to supply power to any new current consumer. Connecting and disconnecting is quick and can be carried out in complete safety even when energized. These two operations (adding or modifying) take place without having to stop operations.
- Quick and easy fault location since current consumers are near to the line
- Maintenance is non existent or greatly reduced

Major contribution to sustainable development

- Busbar trunking systems allow circuits to be combined. Compared with a traditional cable distribution system, consumption of copper raw materials and insulators is divided by 3 due to the busbar trunking distributed network concept (see **Fig. E39**).

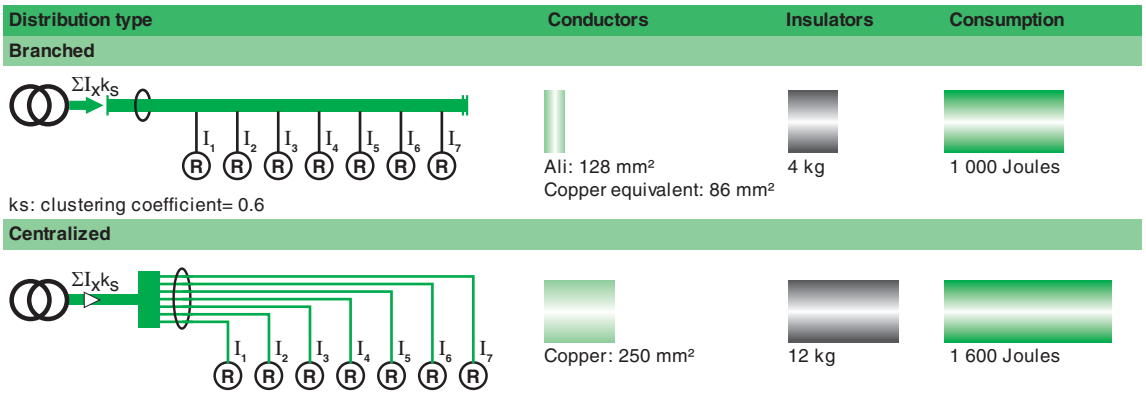

Fig. E39 : Example: 30 m of Canalis KS 250A equipped with 10 25 A, four-pole feeders

- Reusable device and all of its components are fully recyclable.
- Does not contain PVC and does not generate toxic gases or waste.
- Reduction of risks due to exposure to electromagnetic fields.

New functional features for Canalis

Busbar trunking systems are getting even better. Among the new features we can mention:

- Increased performance with a IP55 protection index and new ratings of 160 A through to 1000 A (Ks).
- New lighting offers with pre-cabled lights and new light ducts.
- New fixing accessories. Quick fixing system, cable ducts, shared support with "VDI" (voice, data, images) circuits.

2 The installation system

Busbar trunking systems are perfectly integrated with the environment:

- white color to enhance the working environment, naturally integrated in a range of electrical distribution products.
- conformity with European regulations on reducing hazardous materials (RoHS).

Examples of Canalis busbar trunking systems

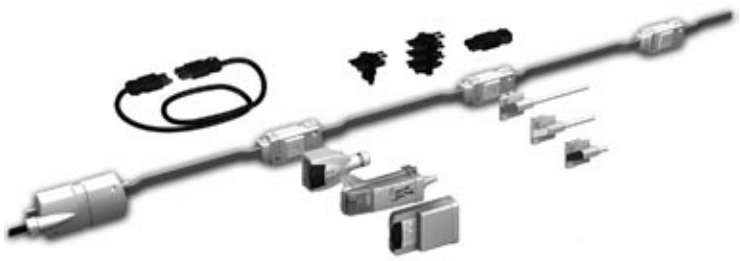

Fig. E40 : Flexible busbar trunking not capable of supporting light fittings : Canalis KDP (20 A)



Fig. E41 : Rigid busbar trunking able to support light fittings : Canalis KBA or KBB (25 and 40 A)

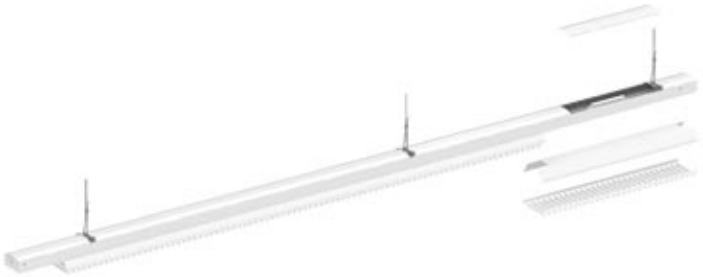

Fig. E42 : Lighting duct : Canalis KBX (25 A)

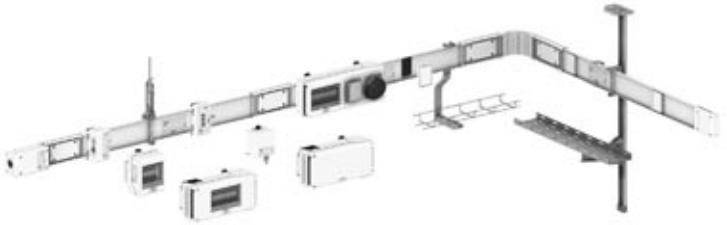

Fig. E43 : A busway for medium power distribution : Canalis KN (40 up to 160 A)

2 The installation system



Fig. E44 : A busway for medium power distribution : Canalis KS (100 up to 1000A)

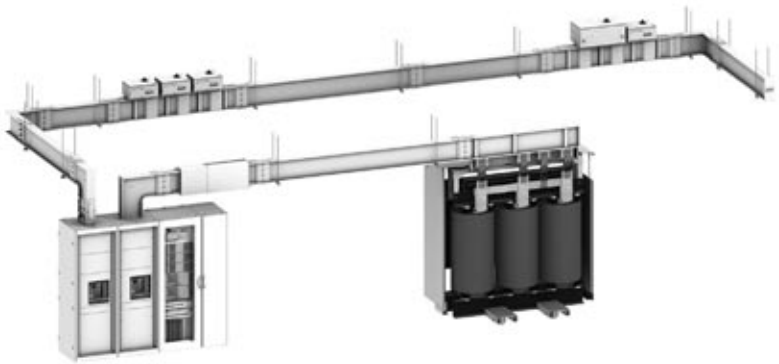

Fig. E45 : A busway for high power distribution : Canalis KT (800A up to 1000A)

3 External influences (IEC 60364-5-51)

External influences shall be taken into account when choosing:
- *The appropriate measures to ensure the safety of persons (in particular in special locations or electrical installations)*
- *The characteristics of electrical equipment, such as degree of protection (IP), mechanical withstand (IK), etc.*

3.1 Definition and reference standards

Every electrical installation occupies an environment that presents a variable degree of risk:
- For people
- For the equipment constituting the installation

Consequently, environmental conditions influence the definition and choice of appropriate installation equipment and the choice of protective measures for the safety of persons.

The environmental conditions are referred to collectively as “external influences”. Many national standards concerned with external influences include a classification scheme which is based on, or which closely resembles, that of international standard IEC 60364-5-51.

If several external influences appear at the same time, they can have independent or mutual effects and the degree of protection must be chosen accordingly

3.2 Classification

Each condition of external influence is designated by a code comprising a group of two capital letters and a number as follows:

First letter (A, B or C)

The first letter relates to the general category of external influence :
- A = environment
- B = utilisation
- C = construction of buildings

Second letter

The second letter relates to the nature of the external influence.

Number

The number relates to the class within each external influence.

Additional letter (optional)

Used only if the effective protection of persons is greater than that indicated by the first IP digit.
When only the protection of persons is to be specified, the two digits of the IP code are replaced by the X’s.
Example: IP XXB.

Example

For example the code AC2 signifies:
A = environment
AC = environment-altitude
AC2 = environment-altitude > 2,000 m

3.3 List of external influences

Figure E46 below is from IEC 60364-5-51, which should be referred to if further details are required.

Code	External influences			Characteristics required for equipment
A - Environment				
AA	**Ambient temperature (°C)**			
	Low	High		Specially designed equipment or appropriate arrangements
AA1	- 60 °C	+ 5 °C		
AA2	- 40 °C	+ 5 °C		
AA3	- 25 °C	+ 5 °C		
AA4	- 5° C	+ 40 °C		Normal (special precautions in certain cases)
AA5	+ 5 °C	+ 40 °C		Normal
AA6	+ 5 °C	+ 60 °C		Specially designed equipment or appropriate arrangements
AA7	- 25 °C	+ 55 °C		
AA8	- 50 °C	+ 40 °C		

Fig. E46 : List of external influences (taken from Appendix A of IEC 60364-5-51) (continued on next page)

3 External influences (IEC 60364-5-51)

Code	External influences						Characteristics required for equipment
A - Environment							
AB	**Atmospheric humidity**						
	Air temperature °C		Relative humidity %		Absolute humidity g/m³		
	Low	High	Low	High	Low	High	
AB1	- 60 °C	+ 5 °C	3	100	0.003	7	Appropriate arrangements shall be made
AB2	- 40 °C	+ 5 °C	10	100	0.1	7	
AB3	- 25 °C	+ 5 °C	10	100	0.5	7	
AB4	- 5° C	+ 40 °C	5	95	1	29	Normal
AB5	+ 5 °C	+ 40 °C	5	85	1	25	Normal
AB6	+ 5 °C	+ 60 °C	10	100	1	35	Appropriate arrangements shall be made
AB7	- 25 °C	+ 55 °C	10	100	0.5	29	
AB8	- 50 °C	+ 40 °C	15	100	0.04	36	
AC	**Altitude**						
AC1	⩽ 2000 m						Normal
AC2	> 2000 m						May necessitate precaution (derating factors)
AD	**Presence of water**						
AD1	Negligible		Outdoor or non-weather protected locations				IPX0
AD2	Free-falling drops						IPX1 or IPX2
AD3	Sprays						IPX3
AD4	Splashes						IPX4
AD5	Jets		Locations where hose water is used regularly				IPX5
AD6	Waves		Seashore locations (piers, beaches, quays…)				IPX6
AD7	Immersion		Water 150 mm above the highest point and equipment not more than 1m below the surface				IPX7
AD8	Submersion		Equipment is permanently and totally covered				IPX8
AE	**Presence of foreign solid bodies**						
			Smallest dimension		Example		
AE1	Negligible						IP0X
AE2	Small objects		2.5 mm		Tools		IP3X
AE3	Very small objects		1 mm		Wire		IP4X
AE4	Light dust						IP5X if dust penetration is not harmful to functioning
AE5	Moderate dust						IP6X if dust should not penetrate
AE6	Heavy dust						IP6X
AF	**Presence of corrosive or polluting substances**						
AF1	Negligible						Normal
AF2	Atmospheric						According to the nature of the substance
AF3	Intermittent, accidental						Protection against corrosion
AF4	Continuous						Equipment specially designed
AG	**Mechanical stress impact**						
AG1	Low severity						Normal
AG2	Medium severity						Standard where applicable or reinforced material
AG3	High severity						Reinforced protection
AH	**Vibrations**						
AH1	Low severity		Household or similar				Normal
AH2	Medium severity		Usual industrial conditions				Specially designed equipment or special arrangements
AH3	High severity		Severe industrial conditions				
AJ	**Other mechanical stresses**						
AK	**Presence of flora and/or mould growth**						
AH1	No hazard						Normal
AH2	Hazard						
AL	**Presence of fauna**						
AH1	No hazard						Normal
AH2	Hazard						
AM	**Electromagnetic, electrostatic or ionising influences / Low frequency electromagnetic phenomena / Harmonics**						
AM1	Harmonics, interharmonics						Refer to applicable IEC standards
AM2	Signalling voltage						
AM3	Voltage amplitude variations						
AM4	Voltage unbalance						
AM5	Power frequency variations						
AM6	Induced low-frequency voltages						
AM7	Direct current in a.c. networks						
AM8	Radiated magnetic fields						
AM9	Electric field						
AM21	Induced oscillatory voltages or currents						

***Fig. E46** : List of external influences (taken from Appendix A of IEC 60364-5-51) (continued on next page)*

3 External influences (IEC 60364-5-51)

Code	External influences	Characteristics required for equipment
A - Environment		
AM22	Conducted unidirectional transients of the nanosecond time scale	Refer to applicable IEC standards
AM23	Conducted unidirectional transients of the microsecond to the millisecond time scale	
AM24	Conducted oscillatory transients	
AM25	Radiated high frequency phenomena	
AM31	Electrostatic discharges	
AM41	Ionisation	
AN	**Solar radiation**	
AN1	Low	Normal
AN2	Medium	
AN3	High	
AP	**Seismic effect**	
AP1	Negligible	Normal
AP2	Low severity	
AP3	Medium severity	
AP4	High severity	
AQ	**Lightning**	
AQ1	Negligible	Normal
AQ2	Indirect exposure	
AQ3	Direct exposure	
AR	**Movement of air**	
AQ1	Low	Normal
AQ2	Medium	
AQ3	High	
AS	**Wind**	
AQ1	Low	Normal
AQ2	Medium	
AQ3	High	
B - Utilization		
BA	**Capability of persons**	
BA1	Ordinary	Normal
BA2	Children	
BA3	Handicapped	
BA4	Instructed	
BA5	Skilled	
BB	**Electrical resistance of human body**	
BC	**Contact of persons with earth potential**	
BC1	None	Class of equipment according to IEC61140
BC2	Low	
BC3	Frequent	
BC4	Continuous	
BD	**Condition of evacuation in case of emergency**	
BD1	Low density / easy exit	Normal
BD2	Low density / difficult exit	
BD3	High density / easy exit	
BD4	High density / difficult exit	
BE	**Nature of processed or stored materials**	
BE1	No significant risks	Normal
BE2	Fire risks	
BE3	Explosion risks	
BE4	Contamination risks	
C - Construction of building		
CA	**Construction materials**	
CA1	Non combustible	Normal
CA2	Combustible	
CB	**Building design**	
CB1	Negligible risks	Normal
CB2	Propagation of fire	
CB3	Movement	
CB4	lexible or unstable	

Fig. E46 *: List of external influences (taken from Appendix A of IEC 60364-5-51) (concluded)*

3 External influences (IEC 60364-5-51)

3.4 Protection provided for enclosed equipment: codes IP and IK

IP code definition (see **Fig. E47**)

The degree of protection provided by an enclosure is indicated in the IP code, recommended in IEC 60529.

Protection is afforded against the following external influences:

- Penetration by solid bodies
- Protection of persons against access to live parts
- Protection against the ingress of dust
- Protection against the ingress of liquids

Note: the IP code applies to electrical equipment for voltages up to and including 72.5 kV.

Elements of the IP Code and their meanings

A brief description of the IP Code elements is given in the following chart (see **Fig. E48**).

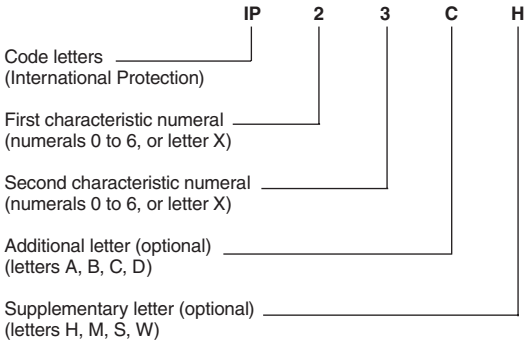

Where a characteristic numeral is not required to be specified, it shall be replaced by the letter "X" ("XX" if both numerals are omitted). Additional letters and/or supplementary letters may be omitted without replacement.

Fig. E47 : IP Code arrangement

Element	Numerals or letters	Meaning for the protection of equipment	Meaning for the protection of persons
Code letters	**IP**		
First characteristic numeral	**0**	**Against ingress of solid foreign objects** (non-protected)	**Against access to hazardous parts with** (non-protected)
	1	⩾ 50 mm diameter	Back of hand
	2	⩾ 12.5 mm diameter	Finger
	3	⩾ 2.5 mm diameter	Tool
	4	⩾ 1.0 mm diameter	Wire
	5	Dust-protected	Wire
	6	Dust-tight	Wire
Second characteristic numeral	**0**	**Against ingress of water with harmful effects** (non-protected)	
	1	Vertically dripping	
	2	Dripping (15° tilted)	
	3	Spraying	
	4	Splashing	
	5	Jetting	
	6	Powerful jetting	
	7	Temporary immersion	
	8	Continuous immersion	
Additional letter (optional)	**A**		**Against access to hazardous parts with** back of hand
	B		Finger
	C		Tool
	D		Wire
Supplementary letter (optional)	**H**	**Supplementary information specific to:** High-voltage apparatus	
	M	Motion during water test	
	S	Stationary during water test	
	W	Weather conditions	

Fig. E48 : Elements of the IP Code

3 External influences (IEC 60364-5-51)

IK Code definition

Standard IEC 62262 defines an IK code that characterises the aptitude of equipment to resist mechanical impacts on all sides (see **Fig. E49**).

IK code	Impact energy (in Joules)	AG code
00	0	
01	⩽ 0.14	
02	⩽ 0.20	AG1
03	⩽ 0.35	
04	⩽ 0.50	
05	⩽ 0.70	
06	⩽ 1	
07	⩽ 2	AG2
08	⩽ 5	AG3
09	⩽ 10	
10	⩽ 20	AG4

Fig. E49 : Elements of the IK Code

IP and IK code specifications for distribution boards

The degrees of protection IP and IK of an enclosure must be specified as a function of the different external influences defined by standard IEC 60364-5-51, in particular:

- Presence of solid bodies (code AE)
- Presence of water (code AD)
- Mechanical stresses (no code)
- Capability of persons (code BA)
- …

Prisma Plus switchboards are designed for indoor installation.
Unless the rules, standards and regulations of a specific country stipulate otherwise, Schneider Electric recommends the following IP and IK values (see **Fig. E50** and **Fig. E51**)

IP recommendations

IP codes according to conditions		
Normal without risk of vertically falling water	Technical rooms	30
Normal with risk of vertically falling water	Hallways	31
Very severe with risk of splashing water from all directions	Workshops	54/55

Fig. E50 : IP recommendations

IK recommendations

IK codes according to conditions		
No risk of major impact	Technical rooms	07
Significant risk of major impact that could damage devices	Hallways	08 (enclosure with door)
Maximum risk of impact that could damage the enclosure	Workshops	10

Fig. E51 : IK recommendations