Chapter L
Power factor correction and harmonic filtering

Contents

1	**Reactive energy and power factor**	**L2**
	1.1 The nature of reactive energy	L2
	1.2 Equipment and appliances requiring reactive energy	L2
	1.3 The power factor	L3
	1.4 Practical values of power factor	L4
2	**Why to improve the power factor?**	**L5**
	2.1 Reduction in the cost of electricity	L5
	2.2 Technical/economic optimization	L5
3	**How to improve the power factor?**	**L7**
	3.1 Theoretical principles	L7
	3.2 By using what equipment?	L7
	3.3 The choice between a fixed or automatically-regulated bank of capacitors	L9
4	**Where to install power factor correction capacitors?**	**L10**
	4.1 Global compensation	L10
	4.2 Compensation by sector	L10
	4.3 Individual compensation	L11
5	**How to decide the optimum level of compensation?**	**L12**
	5.1 General method	L12
	5.2 Simplified method	L12
	5.3 Method based on the avoidance of tariff penalties	L14
	5.4 Method based on reduction of declared maximum apparent power (kVA)	L14
6	**Compensation at the terminals of a transformer**	**L15**
	6.1 Compensation to increase the available active power output	L15
	6.2 Compensation of reactive energy absorbed by the transformer	L16
7	**Power factor correction of induction motors**	**L18**
	7.1 Connection of a capacitor bank and protection settings	L18
	7.2 How self-excitation of an induction motor can be avoided	L19
8	**Example of an installation before and after power-factor correction**	**L20**
9	**The effects of harmonics**	**L21**
	9.1 Problems arising from power-system harmonics	L21
	9.2 Possible solutions	L21
	9.3 Choosing the optimum solution	L23
10	**Implementation of capacitor banks**	**L24**
	10.1 Capacitor elements	L24
	10.2 Choice of protection, control devices and connecting cables	L25

1 Reactive energy and power factor

Alternating current systems supply two forms of energy:
- *"Active" energy measured in kilowatt hours (kWh) which is converted into mechanical work, heat, light, etc*
- *"Reactive" energy, which again takes two forms:*
  - *"Reactive" energy required by inductive circuits (transformers, motors, etc.),*
  - *"Reactive" energy supplied by capacitive circuits (cable capacitance, power capacitors, etc)*

1.1 The nature of reactive energy

All inductive (i.e. electromagnetic) machines and devices that operate on AC systems convert electrical energy from the power system generators into mechanical work and heat. This energy is measured by kWh meters, and is referred to as "active" or "wattful" energy. In order to perform this conversion, magnetic fields have to be established in the machines, and these fields are associated with another form of energy to be supplied from the power system, known as "reactive" or "wattless" energy.

The reason for this is that inductive circuit cyclically absorbs energy from the system (during the build-up of the magnetic fields) and re-injects that energy into the system (during the collapse of the magnetic fields) twice in every power-frequency cycle.

An exactly similar phenomenon occurs with shunt capacitive elements in a power system, such as cable capacitance or banks of power capacitors, etc. In this case, energy is stored electrostatically. The cyclic charging and discharging of capacitive circuit reacts on the generators of the system in the same manner as that described above for inductive circuit, but the current flow to and from capacitive circuit in exact phase opposition to that of the inductive circuit. This feature is the basis on which power factor correction schemes depend.

It should be noted that while this "wattless" current (more accurately, the "wattless" component of a load current) does not draw power from the system, it does cause power losses in transmission and distribution systems by heating the conductors.

In practical power systems, "wattless" components of load currents are invariably inductive, while the impedances of transmission and distribution systems are predominantly inductively reactive. The combination of inductive current passing through an inductive reactance produces the worst possible conditions of voltage drop (i.e. in direct phase opposition to the system voltage).

For these reasons (transmission power losses and voltage drop), the power-supply authorities reduce the amount of "wattless" (inductive) current as much as possible.

"Wattless" (capacitive) currents have the reverse effect on voltage levels and produce voltage-rises in power systems.

The power (kW) associated with "active" energy is usually represented by the letter P.

The reactive power (kvar) is represented by Q. Inductively-reactive power is conventionally positive (+ Q) while capacitively-reactive power is shown as a negative quantity (- Q).

The apparent power S (kVA) is a combination of P and Q (see **Fig. L1**).

Sub-clause 1.3 shows the relationship between P, Q, and S.

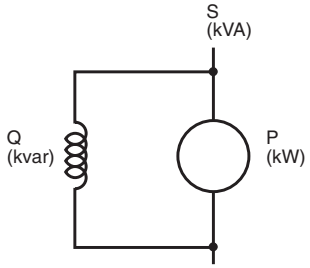

***Fig. L1** : An electric motor requires active power P and reactive power Q from the power system*

1.2 Equipement and appliances requiring reactive energy

All AC equipement and appliances that include electromagnetic devices, or depend on magnetically-coupled windings, require some degree of reactive current to create magnetic flux.
The most common items in this class are transformers and reactors, motors and discharge lamps (with magnetic ballasts) (see **Fig. L2**).
The proportion of reactive power (kvar) with respect to active power (kW) when an item of equipement is fully loaded varies according to the item concerned being:
- 65-75% for asynchronous motors
- 5-10% for transformers

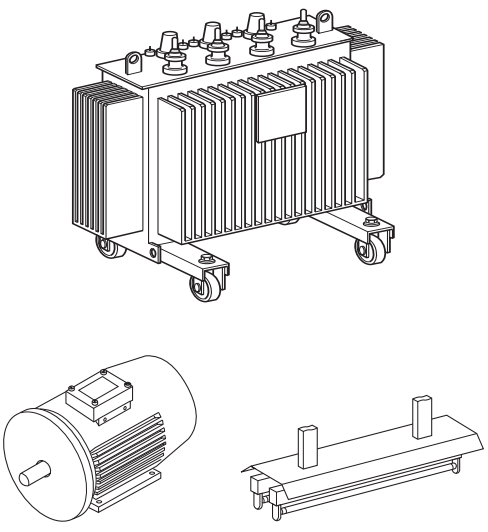

***Fig. L2** : Power consuming items that also require reactive energy*

1 Reactive energy and power factor

The power factor is the ratio of kW to kVA. The closer the power factor approaches its maximum possible value of 1, the greater the benefit to consumer and supplier.
PF = P (kW) / S (kVA)
P = Active power
S = Apparent power

1.3 The power factor

Definition of power factor

The power factor of a load, which may be a single power-consuming item, or a number of items (for example an entire installation), is given by the ratio of P/S i.e. kW divided by kVA at any given moment.

The value of a power factor will range from 0 to 1.

If currents and voltages are perfectly sinusoidal signals, power factor equals cos φ.

A power factor close to unity means that the reactive energy is small compared with the active energy, while a low value of power factor indicates the opposite condition.

Power vector diagram

- ■ Active power P (in kW)
  - □ Single phase (1 phase and neutral): $P = V\ I \cos\varphi$
  - □ Single phase (phase to phase): $P = U\ I \cos\varphi$
  - □ Three phase (3 wires or 3 wires + neutral): $P = \sqrt{3}\ U\ I \cos\varphi$
- ■ Reactive power Q (in kvar)
  - □ Single phase (1 phase and neutral): $P = V\ I \sin\varphi$
  - □ Single phase (phase to phase): $Q = U\ I \sin\varphi$
  - □ Three phase (3 wires or 3 wires + neutral): $P = \sqrt{3}\ U\ I \sin\varphi$
- ■ Apparent power S (in kVA)
  - □ Single phase (1 phase and neutral): $S = V\ I$
  - □ Single phase (phase to phase): $S = U\ I$
  - □ Three phase (3 wires or 3 wires + neutral): $P = \sqrt{3}\ U\ I$

where:
V = Voltage between phase and neutral
U = Voltage between phases
I = Line current
φ = Phase angle between vectors V and I.

- □ For balanced and near-balanced loads on 4-wire systems

Current and voltage vectors, and derivation of the power diagram

The power "vector" diagram is a useful artifice, derived directly from the true rotating vector diagram of currents and voltage, as follows:

The power-system voltages are taken as the reference quantities, and one phase only is considered on the assumption of balanced 3-phase loading.

The reference phase voltage (V) is co-incident with the horizontal axis, and the current (I) of that phase will, for practically all power-system loads, lag the voltage by an angle φ.

The component of I which is in phase with V is the "wattful" component of I and is equal to $I \cos\varphi$, while $VI \cos\varphi$ equals the active power (in kW) in the circuit, if V is expressed in kV.

The component of I which lags 90 degrees behind V is the wattless component of I and is equal to $I \sin\varphi$, while $VI \sin\varphi$ equals the reactive power (in kvar) in the circuit, if V is expressed in kV.

If the vector I is multiplied by V, expressed in kV, then VI equals the apparent power (in kVA) for the circuit.

The simple formula is obtained: $S^2 = P^2 + Q^2$

The above kW, kvar and kVA values per phase, when multiplied by 3, can therefore conveniently represent the relationships of kVA, kW, kvar and power factor for a total 3-phase load, as shown in **Figure L3** .

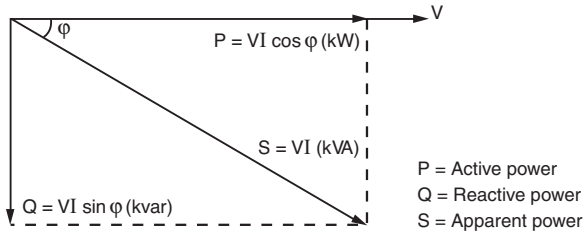

***Fig. L3** : Power diagram*

1 Reactive energy and power factor

An example of power calculations (see **Fig. L4**)

Type of circuit		Apparent power S (kVA)	Active power P (kW)	Reactive power Q (kvar)
Single-phase (phase and neutral)		S = VI	P = VI cos φ	Q = VI sin φ
Single-phase (phase to phase)		S = UI	P = UI cos φ	Q = UI sin φ
Example	5 kW of load cos φ = 0.5	10 kVA	5 kW	8.7 kvar
Three phase 3-wires or 3-wires + neutral		S = $\sqrt{3}$ UI	P = $\sqrt{3}$ UI cos φ	Q = $\sqrt{3}$ UI sin φ
Example	Motor Pn = 51 kW cos φ = 0.86 ρ = 0.91 (motor efficiency)	65 kVA	56 kW	33 kvar

Fig. L4 : Example in the calculation of active and reactive power

1.4 Practical values of power factor

The calculations for the three-phase example above are as follows:
Pn = delivered shaft power = 51 kW
P = active power consumed

$$P = \frac{Pn}{\rho} = \frac{51}{0.91} = 56 \text{ kW}$$

S = apparent power

$$S = \frac{P}{\cos \varphi} = \frac{56}{0.86} = 65 \text{ kVA}$$

So that, on referring to diagram **Figure L5** or using a pocket calculator, the value of tan φ corresponding to a cos φ of 0.86 is found to be 0.59
Q = P tan φ = 56 x 0.59 = 33 kvar (see Figure L15).

Alternatively

$$Q = \sqrt{S^2 - P^2} = \sqrt{65^2 - 56^2} = 33 \text{ kvar}$$

Average power factor values for the most commonly-used equipment and appliances (see **Fig. L6**)

Equipment and appliances		cos φ	tan φ
■ Common induction motor loaded at	0%	0.17	5.80
	25%	0.55	1.52
	50%	0.73	0.94
	75%	0.80	0.75
	100%	0.85	0.62
■ Incandescent lamps		1.0	0
■ Fluorescent lamps (uncompensated)		0.5	1.73
■ Fluorescent lamps (compensated)		0.93	0.39
■ Discharge lamps		0.4 to 0.6	2.29 to 1.33
■ Ovens using resistance elements		1.0	0
■ Induction heating ovens (compensated)		0.85	0.62
■ Dielectric type heating ovens		0.85	0.62
■ Resistance-type soldering machines		0.8 to 0.9	0.75 to 0.48
■ Fixed 1-phase arc-welding set		0.5	1.73
■ Arc-welding motor-generating set		0.7 to 0.9	1.02 to 0.48
■ Arc-welding transformer-rectifier set		0.7 to 0.8	1.02 to 0.75
■ Arc furnace		0.8	0.75

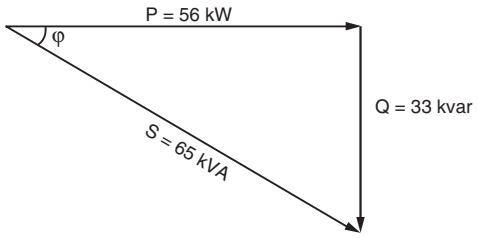

Fig. L5 : Calculation power diagram

Fig. L6 : Values of cos φ and tan φ for commonly-used equipment

2 Why to improve the power factor?

An improvement of the power factor of an installation presents several technical and economic advantages, notably in the reduction of electricity bills

2.1 Reduction in the cost of electricity

Good management in the consumption of reactive energy brings economic advantages.

These notes are based on an actual tariff structure commonly applied in Europe, designed to encourage consumers to minimize their consumption of reactive energy.

The installation of power-factor correction capacitors on installations permits the consumer to reduce his electricity bill by maintaining the level of reactive-power consumption below a value contractually agreed with the power supply authority.
In this particular tariff, reactive energy is billed according to the tan φ criterion.
As previously noted:

$$\tan \varphi = \frac{Q \text{ (kvarh)}}{P \text{ (kWh)}}$$

The power supply authority delivers reactive energy for free:
- If the reactive energy represents less than 40% of the active energy (tan φ < 0.4) for a maximum period of 16 hours each day (from 06-00 h to 22-00 h) during the most-heavily loaded period (often in winter)
- Without limitation during light-load periods in winter, and in spring and summer.

During the periods of limitation, reactive energy consumption exceeding 40% of the active energy (i.e. tan φ > 0.4) is billed monthly at the current rates. Thus, the quantity of reactive energy billed in these periods will be:
kvarh (to be billed) = kWh (tan φ > 0.4) where:
- kWh is the active energy consumed during the periods of limitation
- kWh tan φ is the total reactive energy during a period of limitation
- 0.4 kWh is the amount of reactive energy delivered free during a period of limitation

tan φ = 0.4 corresponds to a power factor of 0.93 so that, if steps are taken to ensure that during the limitation periods the power factor never falls below 0.93, the consumer will have nothing to pay for the reactive power consumed.

Against the financial advantages of reduced billing, the consumer must balance the cost of purchasing, installing and maintaining the power factor improvement capacitors and controlling switchgear, automatic control equipment (where stepped levels of compensation are required) together with the additional kWh consumed by the dielectric losses of the capacitors, etc. It may be found that it is more economic to provide partial compensation only, and that paying for some of the reactive energy consumed is less expensive than providing 100% compensation.

The question of power-factor correction is a matter of optimization, except in very simple cases.

Power factor improvement allows the use of smaller transformers, switchgear and cables, etc. as well as reducing power losses and voltage drop in an installation

2.2 Technical/economic optimization

A high power factor allows the optimization of the components of an installation. Overating of certain equipment can be avoided, but to achieve the best results, the correction should be effected as close to the individual inductive items as possible.

Reduction of cable size

Figure L7 shows the required increase in the size of cables as the power factor is reduced from unity to 0.4, for the same active power transmitted.

Multiplying factor for the cross-sectional area of the cable core(s)	1	1.25	1.67	2.5
cos φ	1	0.8	0.6	0.4

Fig. L7 : Multiplying factor for cable size as a function of cos φ

2 Why to improve the power factor?

Reduction of losses (P, kW) in cables

Losses in cables are proportional to the current squared, and are measured by the kWh meter of the installation. Reduction of the total current in a conductor by 10% for example, will reduce the losses by almost 20%.

Reduction of voltage drop

Power factor correction capacitors reduce or even cancel completely the (inductive) reactive current in upstream conductors, thereby reducing or eliminating voltage drops.

Note: Over compensation will produce a voltage rise at the capacitor level.

Increase in available power

By improving the power factor of a load supplied from a transformer, the current through the transformer will be reduced, thereby allowing more load to be added. In practice, it may be less expensive to improve the power factor (1), than to replace the transformer by a larger unit.

This matter is further elaborated in clause 6.

(1) Since other benefits are obtained from a high value of power factor, as previously noted.

3 How to improve the power factor?

Improving the power factor of an installation requires a bank of capacitors which acts as a source of reactive energy. This arrangement is said to provide reactive energy compensation

a) Reactive current components only flow pattern

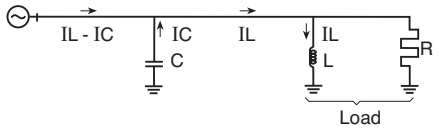

b) When IC = IL, all reactive power is supplied from the capacitor bank

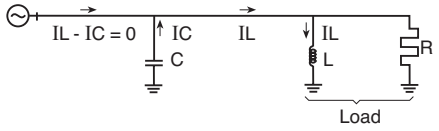

c) With load current added to case (**b**)

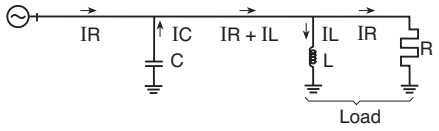

***Fig. L8** : Showing the essential features of power-factor correction*

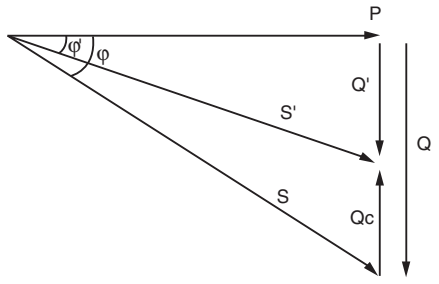

***Fig. L9** : Diagram showing the principle of compensation: Qc = P (tan φ - tan φ')*

3.1 Theoretical principles

An inductive load having a low power factor requires the generators and transmission/distribution systems to pass reactive current (lagging the system voltage by 90 degrees) with associated power losses and exaggerated voltage drops, as noted in sub-clause 1.1. If a bank of shunt capacitors is added to the load, its (capacitive) reactive current will take the same path through the power system as that of the load reactive current. Since, as pointed out in sub-clause 1.1, this capacitive current Ic (which leads the system voltage by 90 degrees) is in direct phase opposition to the load reactive current (IL), the two components flowing through the same path will cancel each other, such that if the capacitor bank is sufficiently large and Ic = IL there will be no reactive current flow in the system upstream of the capacitors.

This is indicated in **Figure L8** (**a**) and (**b**) which show the flow of the reactive components of current only.
In this figure:
R represents the active-power elements of the load
L represents the (inductive) reactive-power elements of the load
C represents the (capacitive) reactive-power elements of the power-factor correction equipment (i.e. capacitors).

It will be seen from diagram (**b**) of **Figure L9**, that the capacitor bank C appears to be supplying all the reactive current of the load. For this reason, capacitors are sometimes referred to as “generators of lagging vars”.

In diagram (**c**) of Figure L9, the active-power current component has been added, and shows that the (fully-compensated) load appears to the power system as having a power factor of 1.

In general, it is not economical to fully compensate an installation.

Figure L9 uses the power diagram discussed in sub-clause 1.3 (see Fig. L3) to illustrate the principle of compensation by reducing a large reactive power Q to a smaller value Q’ by means of a bank of capacitors having a reactive power Qc. In doing so, the magnitude of the apparent power S is seen to reduce to S’.

Example:

A motor consumes 100 kW at a power factor of 0.75 (i.e. tan φ = 0.88). To improve the power factor to 0.93 (i.e. tan φ = 0.4), the reactive power of the capacitor bank must be : Qc = 100 (0.88 - 0.4) = 48 kvar

The selected level of compensation and the calculation of rating for the capacitor bank depend on the particular installation. The factors requiring attention are explained in a general way in clause 5, and in clauses 6 and 7 for transformers and motors.

Note: Before starting a compensation project, a number of precautions should be observed. In particular, oversizing of motors should be avoided, as well as the no-load running of motors. In this latter condition, the reactive energy consumed by a motor results in a very low power factor (≈ 0.17); this is because the kW taken by the motor (when it is unloaded) are very small.

3.2 By using what equipment?

Compensation at LV

At low voltage, compensation is provided by:
- Fixed-value capacitor
- Equipment providing automatic regulation, or banks which allow continuous adjustment according to requirements, as loading of the installation changes

Note: When the installed reactive power of compensation exceeds 800 kvar, and the load is continuous and stable, it is often found to be economically advantageous to instal capacitor banks at the medium voltage level.

3 How to improve the power factor?

Compensation can be carried out by a fixed value of capacitance in favourable circumstances

Fixed capacitors (see **Fig. L10**)

This arrangement employs one or more capacitor(s) to form a constant level of compensation. Control may be:

- Manual: by circuit-breaker or load-break switch
- Semi-automatic: by contactor
- Direct connection to an appliance and switched with it

These capacitors are applied:

- At the terminals of inductive devices (motors and transformers)
- At busbars supplying numerous small motors and inductive appliance for which individual compensation would be too costly
- In cases where the level of load is reasonably constant



***Fig. L10** : Example of fixed-value compensation capacitors*

Compensation is more-commonly effected by means of an automatically-controlled stepped bank of capacitors

Automatic capacitor banks (see **Fig. L11**)

This kind of equipment provides automatic control of compensation, maintaining the power factor within close limits around a selected level. Such equipment is applied at points in an installation where the active-power and/or reactive-power variations are relatively large, for example:

- At the busbars of a general power distribution board
- At the terminals of a heavily-loaded feeder cable



***Fig. L11** : Example of automatic-compensation-regulating equipment*

Automatically-regulated banks of capacitors allow an immediate adaptation of compensation to match the level of load

The principles of, and reasons, for using automatic compensation

A bank of capacitors is divided into a number of sections, each of which is controlled by a contactor. Closure of a contactor switches its section into parallel operation with other sections already in service. The size of the bank can therefore be increased or decreased in steps, by the closure and opening of the controlling contactors.

A control relay monitors the power factor of the controlled circuit(s) and is arranged to close and open appropriate contactors to maintain a reasonably constant system power factor (within the tolerance imposed by the size of each step of compensation). The current transformer for the monitoring relay must evidently be placed on one phase of the incoming cable which supplies the circuit(s) being controlled, as shown in **Figure L12**.

A Varset Fast capacitor bank is an automatic power factor correction equipment including static contactors (thyristors) instead of usual contactors. Static correction is particularly suitable for a certain number of installations using equipment with fast cycle and/or sensitive to transient surges.

The advantages of static contactors are :
- Immediate response to all power factor fluctuation (response time 2 s or 40 ms according to regulator option)
- Unlimited number of operations
- Elimination of transient phenomena on the network on capacitor switching
- Fully silent operation

By closely matching compensation to that required by the load, the possibility of producing overvoltages at times of low load will be avoided, thereby preventing an overvoltage condition, and possible damage to appliances and equipment. Overvoltages due to excessive reactive compensation depend partly on the value of source impedance.

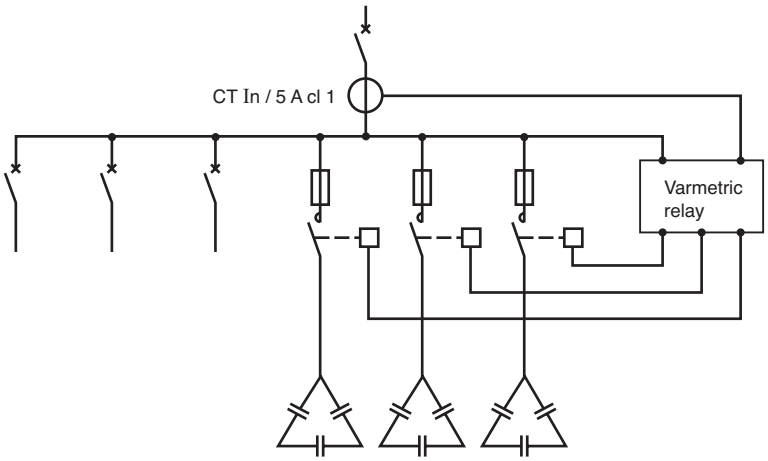

Fig. L12 : The principle of automatic-compensation control

3.3 The choice between a fixed or automatically-regulated bank of capacitors

Commonly-applied rules

Where the kvar rating of the capacitors is less than, or equal to 15% of the supply transformer rating, a fixed value of compensation is appropriate. Above the 15% level, it is advisable to install an automatically-controlled bank of capacitors.
The location of low-voltage capacitors in an installation constitutes the mode of compensation, which may be global (one location for the entire installation), partial (section-by-section), local (at each individual device), or some combination of the latter two. In principle, the ideal compensation is applied at a point of consumption and at the level required at any instant.

In practice, technical and economic factors govern the choice.

4 Where to install correction capacitors?

Where a load is continuous and stable, global compensation can be applied

4.1 Global compensation (see **Fig. L13**)

Principle

The capacitor bank is connected to the busbars of the main LV distribution board for the installation, and remains in service during the period of normal load.

Advantages

The global type of compensation:

- Reduces the tariff penalties for excessive consumption of kvars
- Reduces the apparent power kVA demand, on which standing charges are usually based
- Relieves the supply transformer, which is then able to accept more load if necessary

Comments

- Reactive current still flows in all conductors of cables leaving (i.e. downstream of) the main LV distribution board
- For the above reason, the sizing of these cables, and power losses in them, are not improved by the global mode of compensation.

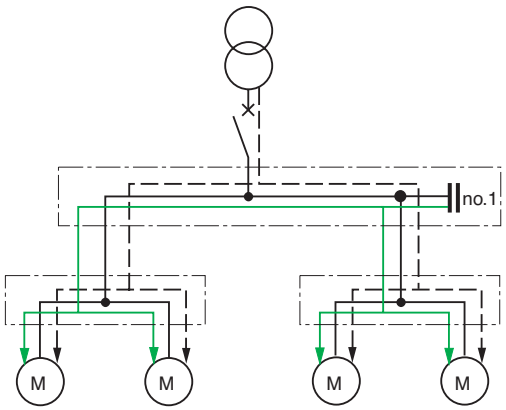

Fig. L13 : Global compensation

Compensation by sector is recommended when the installation is extensive, and where the load/time patterns differ from one part of the installation to another

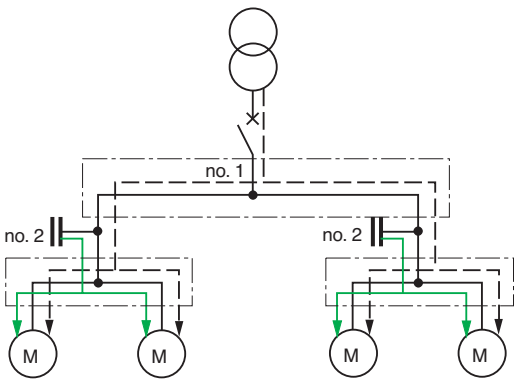

Fig. L14 : Compensation by sector

4.2 Compensation by sector (see **Fig. L14**)

Principle

Capacitor banks are connected to busbars of each local distribution board, as shown in Figure L14.

A significant part of the installation benefits from this arrangement, notably the feeder cables from the main distribution board to each of the local distribution boards at which the compensation measures are applied.

Advantages

The compensation by sector:

- Reduces the tariff penalties for excessive consumption of kvars
- Reduces the apparent power kVA demand, on which standing charges are usually based
- Relieves the supply transformer, which is then able to accept more load if necessary
- The size of the cables supplying the local distribution boards may be reduced, or will have additional capacity for possible load increases
- Losses in the same cables will be reduced

Comments

- Reactive current still flows in all cables downstream of the local distribution boards
- For the above reason, the sizing of these cables, and the power losses in them, are not improved by compensation by sector
- Where large changes in loads occur, there is always a risk of overcompensation and consequent overvoltage problems

4 Where to install correction capacitors?

Individual compensation should be considered when the power of motor is significant with respect to power of the installation

4.3 Individual compensation

Principle

Capacitors are connected directly to the terminals of inductive circuit (notably motors, see further in Clause 7). Individual compensation should be considered when the power of the motor is significant with respect to the declared power requirement (kVA) of the installation.
The kvar rating of the capacitor bank is in the order of 25% of the kW rating of the motor. Complementary compensation at the origin of the installation (transformer) may also be beneficial.

Advantages

Individual compensation:
- Reduces the tariff penalties for excessive consumption of kvars
- Reduces the apparent power kVA demand
- Reduces the size of all cables as well as the cable losses

Comments

- Significant reactive currents no longer exist in the installation

5 How to decide the optimum level of compensation?

5.1 General method

Listing of reactive power demands at the design stage

This listing can be made in the same way (and at the same time) as that for the power loading described in chapter A. The levels of active and reactive power loading, at each level of the installation (generally at points of distribution and sub-distribution of circuits) can then be determined.

Technical-economic optimization for an existing installation

The optimum rating of compensation capacitors for an existing installation can be determined from the following principal considerations:

- Electricity bills prior to the installation of capacitors
- Future electricity bills anticipated following the installation of capacitors
- Costs of:
  - Purchase of capacitors and control equipment (contactors, relaying, cabinets, etc.)
  - Installation and maintenance costs
  - Cost of dielectric heating losses in the capacitors, versus reduced losses in cables, transformer, etc., following the installation of capacitors

Several simplified methods applied to typical tariffs (common in Europe) are shown in sub-clauses 5.3 and 5.4.

5.2 Simplified method

General principle

An approximate calculation is generally adequate for most practical cases, and may be based on the assumption of a power factor of 0.8 (lagging) before compensation. In order to improve the power factor to a value sufficient to avoid tariff penalties (this depends on local tariff structures, but is assumed here to be 0.93) and to reduce losses, volt-drops, etc. in the installation, reference can be made to **Figure L15** next page.

From the figure, it can be seen that, to raise the power factor of the installation from 0.8 to 0.93 will require 0.355 kvar per kW of load. The rating of a bank of capacitors at the busbars of the main distribution board of the installation would be

Q (kvar) = 0.355 x P (kW).

This simple approach allows a rapid determination of the compensation capacitors required, albeit in the global, partial or independent mode.

Example

It is required to improve the power factor of a 666 kVA installation from 0.75 to 0.928.
The active power demand is 666 x 0.75 = 500 kW.
In Figure L15, the intersection of the row cos φ = 0.75 (before correction) with the column cos φ = 0.93 (after correction) indicates a value of 0.487 kvar of compensation per kW of load.
For a load of 500 kW, therefore, 500 x 0.487 = 244 kvar of capacitive compensation is required.

Note: this method is valid for any voltage level, i.e. is independent of voltage.

5 How to decide the optimum level of compensation?

Before compensation		kvar rating of capacitor bank to install per kW of load, to improve cos φ (the power factor) or tan φ, to a given value													
		tan φ	0.75	0.59	0.48	0.46	0.43	0.40	0.36	0.33	0.29	0.25	0.20	0.14	0.0
tan φ	cos φ	cos φ	0.80	0.86	0.90	0.91	0.92	0.93	0.94	0.95	0.96	0.97	0.98	0.99	1
2.29	0.40		1.557	1.691	1.805	1.832	1.861	1.895	1.924	1.959	1.998	2.037	2.085	2.146	2.288
2.22	0.41		1.474	1.625	1.742	1.769	1.798	1.831	1.840	1.896	1.935	1.973	2.021	2.082	2.225
2.16	0.42		1.413	1.561	1.681	1.709	1.738	1.771	1.800	1.836	1.874	1.913	1.961	2.022	2.164
2.10	0.43		1.356	1.499	1.624	1.651	1.680	1.713	1.742	1.778	1.816	1.855	1.903	1.964	2.107
2.04	0.44		1.290	1.441	1.558	1.585	1.614	1.647	1.677	1.712	1.751	1.790	1.837	1.899	2.041
1.98	0.45		1.230	1.384	1.501	1.532	1.561	1.592	1.628	1.659	1.695	1.737	1.784	1.846	1.988
1.93	0.46		1.179	1.330	1.446	1.473	1.502	1.533	1.567	1.600	1.636	1.677	1.725	1.786	1.929
1.88	0.47		1.130	1.278	1.397	1.425	1.454	1.485	1.519	1.532	1.588	1.629	1.677	1.758	1.881
1.83	0.48		1.076	1.228	1.343	1.370	1.400	1.430	1.464	1.497	1.534	1.575	1.623	1.684	1.826
1.78	0.49		1.030	1.179	1.297	1.326	1.355	1.386	1.420	1.453	1.489	1.530	1.578	1.639	1.782
1.73	0.50		0.982	1.232	1.248	1.276	1.303	1.337	1.369	1.403	1.441	1.481	1.529	1.590	1.732
1.69	0.51		0.936	1.087	1.202	1.230	1.257	1.291	1.323	1.357	1.395	1.435	1.483	1.544	1.686
1.64	0.52		0.894	1.043	1.160	1.188	1.215	1.249	1.281	1.315	1.353	1.393	1.441	1.502	1.644
1.60	0.53		0.850	1.000	1.116	1.144	1.171	1.205	1.237	1.271	1.309	1.349	1.397	1.458	1.600
1.56	0.54		0.809	0.959	1.075	1.103	1.130	1.164	1.196	1.230	1.268	1.308	1.356	1.417	1.559
1.52	0.55		0.769	0.918	1.035	1.063	1.090	1.124	1.156	1.190	1.228	1.268	1.316	1.377	1.519
1.48	0.56		0.730	0.879	0.996	1.024	1.051	1.085	1.117	1.151	1.189	1.229	1.277	1.338	1.480
1.44	0.57		0.692	0.841	0.958	0.986	1.013	1.047	1.079	1.113	1.151	1.191	1.239	1.300	1.442
1.40	0.58		0.665	0.805	0.921	0.949	0.976	1.010	1.042	1.076	1.114	1.154	1.202	1.263	1.405
1.37	0.59		0.618	0.768	0.884	0.912	0.939	0.973	1.005	1.039	1.077	1.117	1.165	1.226	1.368
1.33	0.60		0.584	0.733	0.849	0.878	0.905	0.939	0.971	1.005	1.043	1.083	1.131	1.192	1.334
1.30	0.61		0.549	0.699	0.815	0.843	0.870	0.904	0.936	0.970	1.008	1.048	1.096	1.157	1.299
1.27	0.62		0.515	0.665	0.781	0.809	0.836	0.870	0.902	0.936	0.974	1.014	1.062	1.123	1.265
1.23	0.63		0.483	0.633	0.749	0.777	0.804	0.838	0.870	0.904	0.942	0.982	1.030	1.091	1.233
1.20	0.64		0.450	0.601	0.716	0.744	0.771	0.805	0.837	0.871	0.909	0.949	0.997	1.058	1.200
1.17	0.65		0.419	0.569	0.685	0.713	0.740	0.774	0.806	0.840	0.878	0.918	0.966	1.007	1.169
1.14	0.66		0.388	0.538	0.654	0.682	0.709	0.743	0.775	0.809	0.847	0.887	0.935	0.996	1.138
1.11	0.67		0.358	0.508	0.624	0.652	0.679	0.713	0.745	0.779	0.817	0.857	0.905	0.966	1.108
1.08	0.68		0.329	0.478	0.595	0.623	0.650	0.684	0.716	0.750	0.788	0.828	0.876	0.937	1.079
1.05	0.69		0.299	0.449	0.565	0.593	0.620	0.654	0.686	0.720	0.758	0.798	0.840	0.907	1.049
1.02	0.70		0.270	0.420	0.536	0.564	0.591	0.625	0.657	0.691	0.729	0.769	0.811	0.878	1.020
0.99	0.71		0.242	0.392	0.508	0.536	0.563	0.597	0.629	0.663	0.701	0.741	0.783	0.850	0.992
0.96	0.72		0.213	0.364	0.479	0.507	0.534	0.568	0.600	0.634	0.672	0.712	0.754	0.821	0.963
0.94	0.73		0.186	0.336	0.452	0.480	0.507	0.541	0.573	0.607	0.645	0.685	0.727	0.794	0.936
0.91	0.74		0.159	0.309	0.425	0.453	0.480	0.514	0.546	0.580	0.618	0.658	0.700	0.767	0.909
0.88	0.75		0.132	0.82	0.398	0.426	0.453	0.487	0.519	0.553	0.591	0.631	0.673	0.740	0.882
0.86	0.76		0.105	0.255	0.371	0.399	0.426	0.460	0.492	0.526	0.564	0.604	0.652	0.713	0.855
0.83	0.77		0.079	0.229	0.345	0.373	0.400	0.434	0.466	0.500	0.538	0.578	0.620	0.687	0.829
0.80	0.78		0.053	0.202	0.319	0.347	0.374	0.408	0.440	0.474	0.512	0.552	0.594	0.661	0.803
0.78	0.79		0.026	0.176	0.292	0.320	0.347	0.381	0.413	0.447	0.485	0.525	0.567	0.634	0.776
0.75	0.80			0.150	0.266	0.294	0.321	0.355	0.387	0.421	0.459	0.499	0.541	0.608	0.750
0.72	0.81			0.124	0.240	0.268	0.295	0.329	0.361	0.395	0.433	0.473	0.515	0.582	0.724
0.70	0.82			0.098	0.214	0.242	0.269	0.303	0.335	0.369	0.407	0.447	0.489	0.556	0.698
0.67	0.83			0.072	0.188	0.216	0.243	0.277	0.309	0.343	0.381	0.421	0.463	0.530	0.672
0.65	0.84			0.046	0.162	0.190	0.217	0.251	0.283	0.317	0.355	0.395	0.437	0.504	0.645
0.62	0.85			0.020	0.136	0.164	0.191	0.225	0.257	0.291	0.329	0.369	0.417	0.478	0.620
0.59	0.86				0.109	0.140	0.167	0.198	0.230	0.264	0.301	0.343	0.390	0.450	0.593
0.57	0.87				0.083	0.114	0.141	0.172	0.204	0.238	0.275	0.317	0.364	0.424	0.567
0.54	0.88				0.054	0.085	0.112	0.143	0.175	0.209	0.246	0.288	0.335	0.395	0.538
0.51	0.89				0.028	0.059	0.086	0.117	0.149	0.183	0.230	0.262	0.309	0.369	0.512
0.48	0.90					0.031	0.058	0.089	0.121	0.155	0.192	0.234	0.281	0.341	0.484

Value selected as an example on section 5.2

Value selected as an example on section 5.4

Fig. L15 : kvar to be installed per kW of load, to improve the power factor of an installation

5 How to decide the optimum level of compensation?

In the case of certain (common) types of tariff, an examination of several bills covering the most heavily-loaded period of the year allows determination of the kvar level of compensation required to avoid kvarh (reactive-energy) charges. The pay-back period of a bank of power-factor-correction capacitors and associated equipment is generally about 18 months

5.3 Method based on the avoidance of tariff penalties

The following method allows calculation of the rating of a proposed capacitor bank, based on billing details, where the tariff structure corresponds with (or is similar to) the one described in sub-clause 2.1 of this chapter.

The method determines the minimum compensation required to avoid these charges which are based on kvarh consumption.

The procedure is as follows:

- Refer to the bills covering consumption for the 5 months of winter (in France these are November to March inclusive).

Note: in tropical climates the summer months may constitute the period of heaviest loading and highest peaks (owing to extensive air conditioning loads) so that a consequent variation of high-tariff periods is necessary in this case. The remainder of this example will assume Winter conditions in France.

- Identify the line on the bills referring to “reactive-energy consumed” and “kvarh to be charged”. Choose the bill which shows the highest charge for kvarh (after checking that this was not due to some exceptional situation).
For example: 15,966 kvarh in January.

- Evaluate the total period of loaded operation of the installation for that month, for instance: 220 hours (22 days x 10 hours). The hours which must be counted are those occurring during the heaviest load and the highest peak loads occurring on the power system. These are given in the tariff documents, and are (commonly) during a 16-hour period each day, either from 06.00 h to 22.00 h or from 07.00 h to 23.00 h according to the region. Outside these periods, no charge is made for kvarh consumption.

- The necessary value of compensation in kvar = kvarh billed/number of hours of operation(1) = Qc

The rating of the installed capacitor bank is generally chosen to be slightly larger than that calculated.

Certain manufacturers can provide “slide rules” especially designed to facilitate these kinds of calculation, according to particular tariffs. These devices and accompanying documentation advice on suitable equipment and control schemes, as well as drawing attention to constraints imposed by harmonic voltages on the power system. Such voltages require either over dimensioned capacitors (in terms of heat-dissipation, voltage and current ratings) and/or harmonic-suppression inductors or filters.

For 2-part tariffs based partly on a declared value of kVA, Figure L17 allows determination of the kvar of compensation required to reduce the value of kVA declared, and to avoid exceeding it

5.4 Method based on reduction of declared maximum apparent power (kVA)

For consumers whose tariffs are based on a fixed charge per kVA declared, plus a charge per kWh consumed, it is evident that a reduction in declared kVA would be beneficial. The diagram of **Figure L16** shows that as the power factor improves, the kVA value diminishes for a given value of kW (P). The improvement of the power factor is aimed at (apart from other advantages previously mentioned) reducing the declared level and never exceeding it, thereby avoiding the payment of an excessive price per kVA during the periods of excess, and/or tripping of the the main circuit-breaker. Figure L15 (previous page) indicates the value of kvar of compensation per kW of load, required to improve from one value of power factor to another.

Example:

A supermarket has a declared load of 122 kVA at a power factor of 0.7 lagging, i.e.an active-power load of 85.4 kW. The particular contract for this consumer was based on stepped values of declared kVA (in steps of 6 kVA up to 108 kVA, and 12 kVA steps above that value, this is a common feature in many types of two-part tariff). In the case being considered, the consumer was billed on the basis of 132 kVA. Referring to Figure L15, it can be seen that a 60 kvar bank of capacitors will improve the power factor of the load from 0.7 to 0.95 (0.691 x 85.4 = 59 kvar in the figure). The declared value of kVA will then be $\frac{85.4}{0.95} = 90$ kVA, i.e. an improvement of 30%.

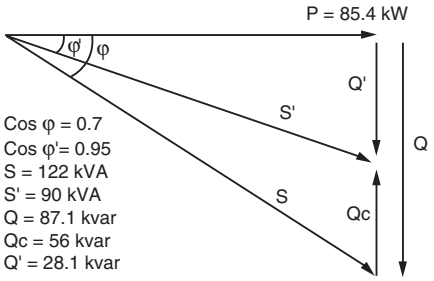

Fig. L16 : Reduction of declared maximum kVA by power-factor improvement

(1) In the billing period, during the hours for which reactive energy is charged for the case considered above:

$$Qc = \frac{15{,}996 \text{ kvarh}}{220 \text{ h}} = 73 \text{ kvar}$$

6 Compensation at the terminals of a transformer

The installation of a capacitor bank can avoid the need to change a transformer in the event of a load increase

6.1 Compensation to increase the available active power output

Steps similar to those taken to reduce the declared maximum kVA, i.e. improvement of the load power factor, as discussed in subclause 5.4, will maximise the available transformer capacity, i.e. to supply more active power.

Cases can arise where the replacement of a transformer by a larger unit, to overcome a load growth, may be avoided by this means. Figure L17 shows directly the power (kW) capability of fully-loaded transformers at different load power factors, from which the increase of active-power output can be obtained as the value of power factor increases.

tan φ	cos φ	Nominal rating of transformers (in kVA)											
		100	160	250	315	400	500	630	800	1000	1250	1600	2000
0.00	1	100	160	250	315	400	500	630	800	1000	1250	1600	2000
0.20	0.98	98	157	245	309	392	490	617	784	980	1225	1568	1960
0.29	0.96	96	154	240	302	384	480	605	768	960	1200	1536	1920
0.36	0.94	94	150	235	296	376	470	592	752	940	1175	1504	1880
0.43	0.92	92	147	230	290	368	460	580	736	920	1150	1472	1840
0.48	0.90	90	144	225	284	360	450	567	720	900	1125	1440	1800
0.54	0.88	88	141	220	277	352	440	554	704	880	1100	1408	1760
0.59	0.86	86	138	215	271	344	430	541	688	860	1075	1376	1720
0.65	0.84	84	134	210	265	336	420	529	672	840	1050	1344	1680
0.70	0.82	82	131	205	258	328	410	517	656	820	1025	1312	1640
0.75	0.80	80	128	200	252	320	400	504	640	800	1000	1280	1600
0.80	0.78	78	125	195	246	312	390	491	624	780	975	1248	1560
0.86	0.76	76	122	190	239	304	380	479	608	760	950	1216	1520
0.91	0.74	74	118	185	233	296	370	466	592	740	925	1184	1480
0.96	0.72	72	115	180	227	288	360	454	576	720	900	1152	1440
1.02	0.70	70	112	175	220	280	350	441	560	700	875	1120	1400

Fig. L17 : Active-power capability of fully-loaded transformers, when supplying loads at different values of power factor

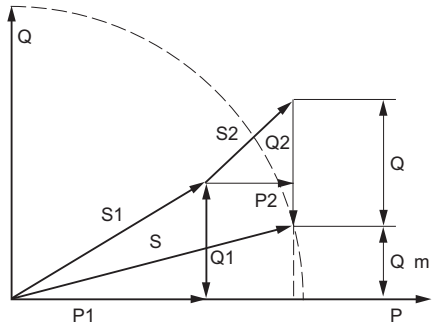

Fig. L18 : Compensation Q allows the installation-load extension S2 to be added, without the need to replace the existing transformer, the output of which is limited to S

Example: (see **Fig. L18**)

An installation is supplied from a 630 kVA transformer loaded at 450 kW (P1) with a mean power factor of 0.8 lagging. The apparent power $S1 = \frac{450}{0.8} = 562$ kVA

The corresponding reactive power

$Q1 = \sqrt{S1^2 - P1^2} = 337$ kvar

The anticipated load increase P2 = 100 kW at a power factor of 0.7 lagging.

The apparent power $S2 = \frac{100}{0.7} = 143$ kVA

The corresponding reactive power

$Q2 = \sqrt{S2^2 - P2^2} = 102$ kvar

What is the minimum value of capacitive kvar to be installed, in order to avoid a change of transformer?

Total power now to be supplied:

P = P1 + P2 = 550 kW

The maximum reactive power capability of the 630 kVA transformer when delivering 550 kW is:

$Qm = \sqrt{S^2 - P^2}$ $\quad Qm = \sqrt{630^2 - 550^2} = 307$ kvar

Total reactive power required by the installation before compensation:

Q1 + Q2 = 337 + 102 = 439 kvar

So that the minimum size of capacitor bank to install:

Qkvar = 439 - 307 = 132 kvar

It should be noted that this calculation has not taken account of load peaks and their duration.

The best possible improvement, i.e. correction which attains a power factor of 1 would permit a power reserve for the transformer of 630 - 550 = 80 kW. The capacitor bank would then have to be rated at 439 kvar.

6 Compensation at the terminals of a transformer

Where metering is carried out at the MV side of a transformer, the reactive-energy losses in the transformer may need to be compensated (depending on the tariff)

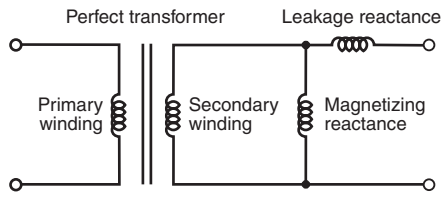

***Fig. L19** : Transformer reactances per phase*

The reactive power absorbed by a transformer cannot be neglected, and can amount to (about) 5% of the transformer rating when supplying its full load. Compensation can be provided by a bank of capacitors. In transformers, reactive power is absorbed by both shunt (magnetizing) and series (leakage flux) reactances. Complete compensation can be provided by a bank of shunt-connected LV capacitors

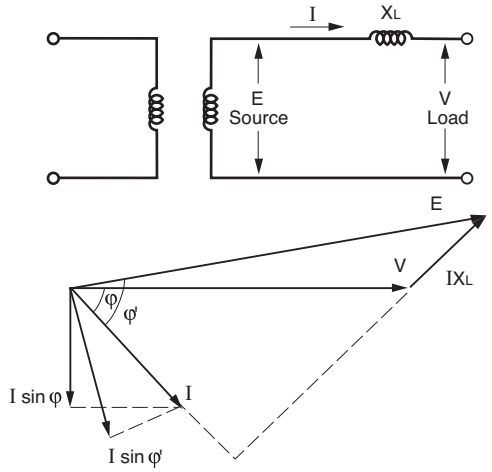

***Fig. L20** : Reactive power absorption by series inductance*

6.2 Compensation of reactive energy absorbed by the transformer

The nature of transformer inductive reactances

All previous references have been to shunt connected devices such as those used in normal loads, and power factor-correcting capacitor banks etc. The reason for this is that shunt connected equipment requires (by far) the largest quantities of reactive energy in power systems; however, series-connected reactances, such as the inductive reactances of power lines and the leakage reactance of transformer windings, etc., also absorb reactive energy.

Where metering is carried out at the MV side of a transformer, the reactive-energy losses in the transformer may (depending on the tariff) need to be compensated. As far as reactive-energy losses only are concerned, a transformer may be represented by the elementary diagram of **Figure L19**. All reactance values are referred to the secondary side of the transformer, where the shunt branch represents the magnetizing-current path. The magnetizing current remains practically constant (at about 1.8% of full-load current) from no load to full load, in normal circumstances, i.e. with a constant primary voltage, so that a shunt capacitor of fixed value can be installed at the MV or LV side, to compensate for the reactive energy absorbed.

Reactive-power absorption in series-connected (leakage flux) reactance X_L

A simple illustration of this phenomenon is given by the vector diagram of **Figure L20**.

The reactive-current component through the load = $I \sin \varphi$ so that $Q_L = VI \sin \varphi$.

The reactive-current component from the source = $I \sin \varphi'$ so that $Q_E = EI \sin \varphi'$.

It can be seen that $E > V$ and $\sin \varphi' > \sin \varphi$.

The difference between $EI \sin \varphi'$ and $VI \sin \varphi$ gives the kvar per phase absorbed by X_L.

It can be shown that this kvar value is equal to I^2X_L (which is analogous to the I^2R active power (kW) losses due to the series resistance of power lines, etc.).

From the I^2X_L formula it is very simple to deduce the kvar absorbed at any load value for a given transformer, as follows:

If per-unit values are used (instead of percentage values) direct multiplication of I and X_L can be carried out.

Example:

A 630 kVA transformer with a short-circuit reactance voltage of 4% is fully loaded.

What is its reactive-power (kvar) loss?

4% = 0.04 pu Ipu = 1

loss = $I^2X_L = 1^2 \times 0.04 = 0.04$ pu kvar

where 1 pu = 630 kVA

The 3-phase kvar losses are 630 x 0.04 = 25.2 kvar (or, quite simply, 4% of 630 kVA).

At half load i.e. $I = 0.5$ pu the losses will be
$0.5^2 \times 0.04 = 0.01$ pu = 630 x 0.01 = 6.3 kvar and so on...

This example, and the vector diagram of Figure L20 show that:

- The power factor at the primary side of a loaded transformer is different (normally lower) than that at the secondary side (due to the absorption of vars)
- Full-load kvar losses due to leakage reactance are equal to the transformer percentage reactance (4% reactance means a kvar loss equal to 4% of the kVA rating of the transformer)
- kvar losses due to leakage reactance vary according to the current (or kVA loading) squared

6 Compensation at the terminals of a transformer

To determine the total kvar losses of a transformer the constant magnetizing-current circuit losses (approx. 1.8% of the transformer kVA rating) must be added to the foregoing “series” losses. **Figure L21** shows the no-load and full-load kvar losses for typical distribution transformers. In principle, series inductances can be compensated by fixed series capacitors (as is commonly the case for long MV transmission lines). This arrangement is operationally difficult, however, so that, at the voltage levels covered by this guide, shunt compensation is always applied.

In the case of MV metering, it is sufficient to raise the power factor to a point where the transformer plus load reactive-power consumption is below the level at which a billing charge is made. This level depends on the tariff, but often corresponds to a tan φ value of 0.31 (cos φ of 0.955).

Rated power (kVA)	Reactive power (kvar) to be compensated	
	No load	Full load
100	2.5	6.1
160	3.7	9.6
250	5.3	14.7
315	6.3	18.4
400	7.6	22.9
500	9.5	28.7
630	11.3	35.7
800	20	54.5
1000	23.9	72.4
1250	27.4	94.5
1600	31.9	126
2000	37.8	176

Fig. L21 : Reactive power consumption of distribution transformers with 20 kV primary windings

As a matter of interest, the kvar losses in a transformer can be completely compensated by adjusting the capacitor bank to give the load a (slightly) leading power factor. In such a case, all of the kvar of the transformer is being supplied from the capacitor bank, while the input to the MV side of the transformer is at unity power factor, as shown in **Figure L22**.

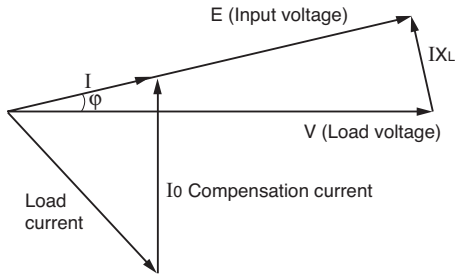

Fig. L22 : Overcompensation of load to completely compensate transformer reactive-power losses

In practical terms, therefore, compensation for transformer-absorbed kvar is included in the capacitors primarily intended for powerfactor correction of the load, either globally, partially, or in the individual mode. Unlike most other kvar-absorbing items, the transformer absorption (i.e. the part due to the leakage reactance) changes significantly with variations of load level, so that, if individual compensation is applied to the transformer, then an average level of loading will have to be assumed.

Fortunately, this kvar consumption generally forms only a relatively small part of the total reactive power of an installation, and so mismatching of compensation at times of load change is not likely to be a problem.

Figure L21 indicates typical kvar loss values for the magnetizing circuit (“no-load kvar” columns), as well as for the total losses at full load, for a standard range of distribution transformers supplied at 20 kV (which include the losses due to the leakage reactance).

7 Power factor correction of induction motors

Individual motor compensation is recommended where the motor power (kVA) is large with respect to the declared power of the installation

7.1 Connection of a capacitor bank and protection settings

General precautions

Because of the small kW consumption, the power factor of a motor is very low at no-load or on light load. The reactive current of the motor remains practically constant at all loads, so that a number of unloaded motors constitute a consumption of reactive power which is generally detrimental to an installation, for reasons explained in preceding sections.

Two good general rules therefore are that unloaded motors should be switched off, and motors should not be oversized (since they will then be lightly loaded).

Connection

The bank of capacitors should be connected directly to the terminals of the motor.

Special motors

It is recommended that special motors (stepping, plugging, inching, reversing motors, etc.) should not be compensated.

Effect on protection settings

After applying compensation to a motor, the current to the motor-capacitor combination will be lower than before, assuming the same motor-driven load conditions. This is because a significant part of the reactive component of the motor current is being supplied from the capacitor, as shown in **Figure L23**.

Where the overcurrent protection devices of the motor are located upstream of the motor capacitor connection (and this will always be the case for terminal-connected capacitors), the overcurrent relay settings must be reduced in the ratio:

cos φ before compensation / cos φ after compensation

For motors compensated in accordance with the kvar values indicated in **Figure L24** (maximum values recommended for avoidance of self-excitation of standard induction motors, as discussed in sub-clause 7.2), the above-mentioned ratio will have a value similar to that indicated for the corresponding motor speed in **Figure L25**.

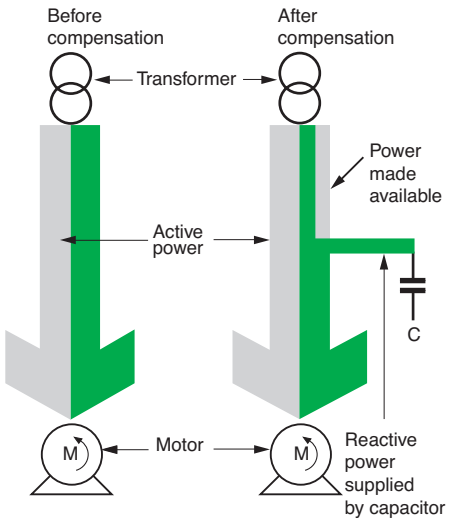

Fig. L23 : Before compensation, the transformer supplies all the reactive power; after compensation, the capacitor supplies a large part of the reactive power

3-phase motors 230/400 V					
Nominal power		kvar to be installed			
		Speed of rotation (rpm)			
kW	hp	3000	1500	1000	750
22	30	6	8	9	10
30	40	7.5	10	11	12.5
37	50	9	11	12.5	16
45	60	11	13	14	17
55	75	13	17	18	21
75	100	17	22	25	28
90	125	20	25	27	30
110	150	24	29	33	37
132	180	31	36	38	43
160	218	35	41	44	52
200	274	43	47	53	61
250	340	52	57	63	71
280	380	57	63	70	79
355	482	67	76	86	98
400	544	78	82	97	106
450	610	87	93	107	117

Figure L24 : Maximum kvar of power factor correction applicable to motor terminals without risk of self excitation

Speed in rpm	Reduction factor
750	0.88
1000	0.90
1500	0.91
3000	0.93

Fig. L25 : Reduction factor for overcurrent protection after compensation

7 Power factor correction of induction motors

When a capacitor bank is connected to the terminals of an induction motor, it is important to check that the size of the bank is less than that at which self-excitation can occur

7.2 How self-excitation of an induction motor can be avoided

When a motor is driving a high-inertia load, the motor will continue to rotate (unless deliberately braked) after the motor supply has been switched off.

The “magnetic inertia” of the rotor circuit means that an emf will be generated in the stator windings for a short period after switching off, and would normally reduce to zero after 1 or 2 cycles, in the case of an uncompensated motor.

Compensation capacitors however, constitute a 3-phase “wattless” load for this decaying emf, which causes capacitive currents to flow through the stator windings. These stator currents will produce a rotating magnetic field in the rotor which acts exactly along the same axis and in the same direction as that of the decaying magnetic field.

The rotor flux consequently increases; the stator currents increase; and the voltage at the terminals of the motor increases; sometimes to dangerously-high levels. This phenomenon is known as self-excitation and is one reason why AC generators are not normally operated at leading power factors, i.e. there is a tendency to spontaneously (and uncontrollably) self excite.

Notes:

1. The characteristics of a motor being driven by the inertia of the load are not rigorously identical to its no-load characteristics. This assumption, however, is sufficiently accurate for practical purposes.

2. With the motor acting as a generator, the currents circulating are largely reactive, so that the braking (retarding) effect on the motor is mainly due only to the load represented by the cooling fan in the motor.

3. The (almost 90° lagging) current taken from the supply in normal circumstances by the unloaded motor, and the (almost 90° leading) current supplied to the capacitors by the motor acting as a generator, both have the same phase relationship to the terminalvoltage. It is for this reason that the two characteristics may be superimposed on the graph.

In order to avoid self-excitation as described above, the kvar rating of the capacitor bank must be limited to the following maximum value:

$Qc \leqslant 0.9 \times Io \times Un \times \sqrt{3}$ where Io = the no-load current of the motor and Un = phase-to-phase nominal voltage of the motor in kV. Figure L24 previous page gives appropriate values of Qc corresponding to this criterion.

Example

A 75 kW, 3,000 rpm, 400 V, 3-phase motor may have a capacitor bank no larger than 17 kvar according to Figure L24. The table values are, in general, too small to adequately compensate the motor to the level of cos φ normally required. Additional compensation can, however, be applied to the system, for example an overall bank, installed for global compensation of a number of smaller appliances.

High-inertia motors and/or loads

In any installation where high-inertia motor driven loads exist, the circuit-breakers or contactors controlling such motors should, in the event of total loss of power supply, be rapidly tripped.

If this precaution is not taken, then self excitation to very high voltages is likely to occur, since all other banks of capacitors in the installation will effectively be in parallel with those of the high-inertia motors.

The protection scheme for these motors should therefore include an overvoltage tripping relay, together with reverse-power checking contacts (the motor will feed power to the rest of the installation, until the stored inertial energy is dissipated). If the capacitor bank associated with a high inertia motor is larger than that recommended in Figure L24, then it should be separately controlled by a circuit-breaker or contactor, which trips simultaneously with the main motor-controlling circuit-breaker or contactor, as shown in Figure L26.

Closing of the main contactor is commonly subject to the capacitor contactor being previously closed.

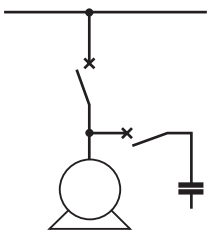

Fig. L26 : Connection of the capacitor bank to the motor

8 Example of an installation before and after power-factor correction

Installation before P.F. correction

$\overrightarrow{kVA}=\overrightarrow{kW}+\overrightarrow{kvar}$ (1)

- kvarh are billed heavily above the declared level
- Apparent power kVA is significantly greater than the kW demand
- The corresponding excess current causes losses (kWh) which are billed
- The installation must be over-dimensioned

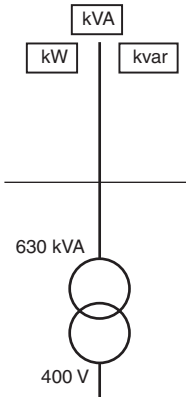

Characteristics of the installation
500 kW cos φ = 0.75

- Transformer is overloaded
- The power demand is

$S = \frac{P}{\cos \varphi} = \frac{500}{0.75} = 665$ kVA

S = apparent power

- The current flowing into the installation downstream of the circuit breaker is

$I = \frac{P}{\sqrt{3}\, U \cos \varphi} = 960$ A

- Losses in cables are calculated as a function of the current squared: 960^2

$P = I^2R$

cos φ = 0.75

- Reactive energy is supplied through the transformer and via the installation wiring
- The transformer, circuit breaker, and cables must be over-dimensioned

cos φ = 0.75 workshop

Installation after P.F. correction

$\overrightarrow{kVA}=\overrightarrow{kW}+\overrightarrow{kvar}$

- The consumption of kvarh is
  - Eliminated, or
  - Reduced, according to the cos φ required
- The tariff penalties
  - For reactive energy where applicable
  - For the entire bill in some cases are eliminated
- The fixed charge based on kVA demand is adjusted to be close to the active power kW demand

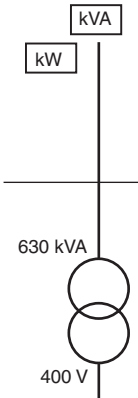

Characteristics of the installation
500 kW cos φ = 0.928

- Transformer no longer overloaded
- The power-demand is 539 kVA
- There is 14% spare-transformer capacity available

- The current flowing into the installation through the circuit breaker is 778 A

- The losses in the cables are reduced to $\frac{778^2}{960^2} = 65\%$ of the former value, thereby economizing in kWh consumed

cos φ = 0.928

- Reactive energy is supplied by the capacitor bank

250 kvar

Capacitor bank rating is 250 kvar in 5 automatically-controlled steps of 50 kvar.

cos φ = 0.75 workshop

Note: In fact, the cos φ of the workshop remains at 0.75 but cos φ for all the installation upstream of the capacitor bank to the transformer LV terminals is 0.928.
As mentioned in Sub-clause 6.2 the cos φ at the HV side of the transformer will be slightly lower (2), due to the reactive power losses in the transformer.

Fig. K27 : Technical-economic comparison of an installation before and after power-factor correction

(1) The arrows denote vector quantities.
(2) Particularly in the pre-corrected case.

9 The effects of harmonics

9.1 Problems arising from power-system harmonics

Equipment which uses power electronics components (variable-speed motor controllers, thyristor-controlled rectifiers, etc.) have considerably increased the problems caused by harmonics in power supply systems.

Harmonics have existed from the earliest days of the industry and were (and still are) caused by the non-linear magnetizing impedances of transformers, reactors, fluorescent lamp ballasts, etc.

Harmonics on symmetrical 3-phase power systems are generally odd-numbered: 3rd, 5th, 7th, 9th..., and the magnitude decreases as the order of the harmonic increases. A number of features may be used in various ways to reduce specific harmonics to negligible values - total elimination is not possible. In this section, practical means of reducing the influence of harmonics are recommended, with particular reference to capacitor banks.

Capacitors are especially sensitive to harmonic components of the supply voltage due to the fact that capacitive reactance decreases as the frequency increases. In practice, this means that a relatively small percentage of harmonic voltage can cause a significant current to flow in the capacitor circuit.

The presence of harmonic components causes the (normally sinusoidal) wave form of voltage or current to be distorted; the greater the harmonic content, the greater the degree of distortion.

If the natural frequency of the capacitor bank/ power-system reactance combination is close to a particular harmonic, then partial resonance will occur, with amplified values of voltage and current at the harmonic frequency concerned. In this particular case, the elevated current will cause overheating of the capacitor, with degradation of the dielectric, which may result in its eventual failure.

Several solutions to these problems are available. This can be accomplished by
- Shunt connected harmonic filter and/or harmonic-suppression reactors or
- Active power filters or
- Hybrid filters

K21

Harmonics are taken into account mainly by oversizing capacitors and including harmonic-suppression reactors in series with them

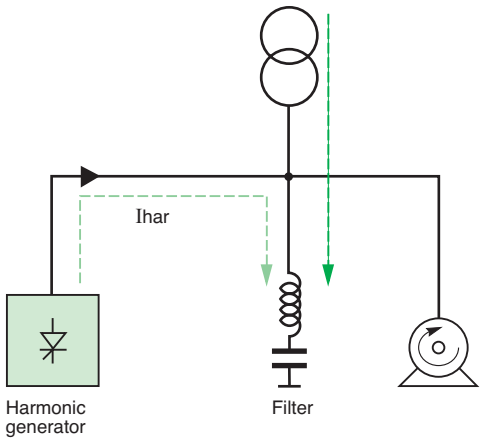

***Fig. L28** : Operation principle of passive filter*

9.2 Possible solutions

Passive filter (see **Fig. L28**)

Countering the effects of harmonics

The presence of harmonics in the supply voltage results in abnormally high current levels through the capacitors. An allowance is made for this by designing for an r.m.s. value of current equal to 1.3 times the nominal rated current. All series elements, such as connections, fuses, switches, etc., associated with the capacitors are similarly oversized, between 1.3 to 1.5 times nominal rating.

Harmonic distortion of the voltage wave frequently produces a “peaky” wave form, in which the peak value of the normal sinusoidal wave is increased. This possibility, together with other overvoltage conditions likely to occur when countering the effects of resonance, as described below, are taken into account by increasing the insulation level above that of “standard” capacitors. In many instances, these two counter measures are all that is necessary to achieve satisfactory operation.

Countering the effects of resonance

Capacitors are linear reactive devices, and consequently do not generate harmonics. The installation of capacitors in a power system (in which the impedances are predominantly inductive) can, however, result in total or partial resonance occurring at one of the harmonic frequencies.

The harmonic order h_o of the natural resonant frequency between the system inductance and the capacitor bank is given by

$$h_o = \sqrt{\frac{Ssc}{Q}}$$

where
Ssc = the level of system short-circuit kVA at the point of connection of the capacitor
Q = capacitor bank rating in kvar; and h_o = the harmonic order of the natural frequency f_o i.e. $\frac{f_o}{50}$ for a 50 Hz system, or $\frac{f_o}{60}$ for a 60 Hz system.

For example: $h_o = \sqrt{\frac{Ssc}{Q}}$ may give a value for h_o of 2.93 which shows that the natural frequency of the capacitor/system-inductance combination is close to the 3rd harmonic frequency of the system.

From $h_o = \frac{f_o}{50}$ it can be seen that $f_o = 50\ h_o = 50 \times 2.93 = 146.5$ Hz

The closer a natural frequency approaches one of the harmonics present on the system, the greater will be the (undesirable) effect. In the above example, strong resonant conditions with the 3rd harmonic component of a distorted wave would certainly occur.

In such cases, steps are taken to change the natural frequency to a value which will not resonate with any of the harmonics known to be present. This is achieved by the addition of a harmonic-suppression inductor connected in series with the capacitor bank.

On 50 Hz systems, these reactors are often adjusted to bring the resonant frequency of the combination, i.e. the capacitor bank + reactors to 190 Hz. The reactors are adjusted to 228 Hz for a 60 Hz system. These frequencies correspond to a value for h_o of 3.8 for a 50 Hz system, i.e. approximately mid-way between the 3rd and 5th harmonics.

In this arrangement, the presence of the reactor increases the fundamental frequency (50 Hz or 60 Hz) current by a small amount (7-8%) and therefore the voltage across the capacitor in the same proportion.

This feature is taken into account, for example, by using capacitors which are designed for 440 V operation on 400 V systems.

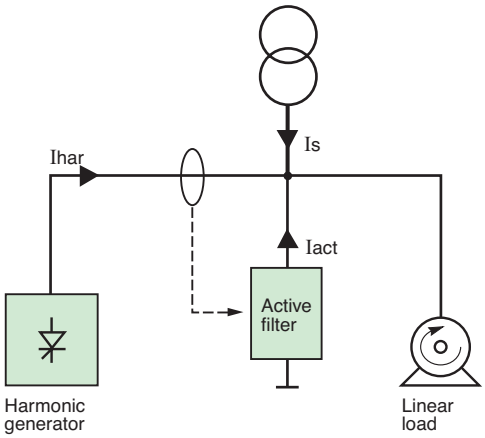

Fig. L29 : Operation principle of active filter

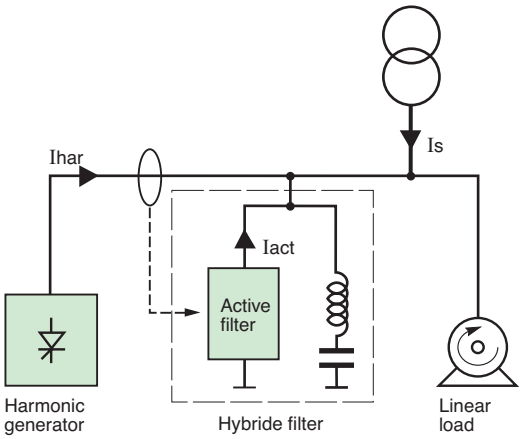

Fig. L30 : Operation principle of hybrid filter

Active filter (see **Fig. L29**)

Active filters are based on power electronic technology. They are generally installed in parallel with the non linear load.

Active filters analyse the harmonics drawn by the load and then inject the same harmonic current to the load with the appropriate phase. As a result, the harmonic currents are totally neutralised at the point considered. This means they no longer flow upstream and are no longer supplied by the source.
A main advantage of active conditioners is that they continue to guarantee efficient harmonic compensation even when changes are made to the installation. They are also exceptionally easy to use as they feature:

- Auto-configuration to harmonic loads whatever their order of magnitude
- Elimination of overload risks
- Compatibility with electrical generator sets
- Connection to any point of the electrical network
- Several conditioners can be used in the same installation to increase depollution efficiency (for example when a new machine is installed)

Active filters may provide also power factor correction.

Hybrid filter (see **Fig. L30**)

This type of filter combines advantages of passive and active filter. One frequency can be filtered by passive filter and all the other frequencies are filtered by active filter.

9.3 Choosing the optimum solution

Figure L31 below shows the criteria that can be taken into account to select the most suitable technology depending on the application.

	Passive filter	Active filter	Hybrid filter
Applications	Industrial	Tertiary	Industrial
… with total power of non linear loads (variable speed drive, UPS, rectifier…)	greater than 200 kVA	lower than 200 kVA	greater than 200 kVA
Power factor correction		No	
Necessity of reducing the harmonic distorsion in voltage for sensitive loads			
Necessity of reducing the harmonic distorsion in current to avoid cable overload			
Necessity of being in accordance with strict limits of harmonic rejected	No		

Fig. L31 : Selection of the most suitable technology depending on the application

For passive filter, a choice is made from the following parameters:

- Gh = the sum of the kVA ratings of all harmonic-generating devices (static converters, inverters, speed controllers, etc.) connected to the busbars from which the capacitor bank is supplied. If the ratings of some of these devices are quoted in kW only, assume an average power factor of 0.7 to obtain the kVA ratings
- Ssc = the 3-phase short-circuit level in kVA at the terminals of the capacitor bank
- Sn = the sum of the kVA ratings of all transformers supplying (i.e. directly connected to) the system level of which the busbars form a part

If a number of transformers are operating in parallel, the removal from service of one or more, will significantly change the values of Ssc and Sn. From these parameters, a choice of capacitor specification which will ensure an acceptable level of operation with the system harmonic voltages and currents, can be made, by reference to **Figure L32**.

- General rule valid for any size of transformer

$Gh \leqslant \frac{Ssc}{120}$	$\frac{Ssc}{120} \leqslant Gh \leqslant \frac{Ssc}{70}$	$Gh > \frac{Ssc}{70}$
Standard capacitors	Capacitor voltage rating increased by 10% (except 230 V units)	Capacitor voltage rating increased by 10% + harmonic-suppression reactor

- Simplified rule if transformer(s) rating Sn ⩽ 2 MVA

$Gh \leqslant 0.15\ Sn$	$0.15\ Sn < Gh \leqslant 0.25\ Sn$	$0.25\ Sn < Gh \leqslant 0.60\ Sn$	$Gh > 0.60\ Sn$
Standard capacitors	Capacitor voltage rating increased by 10% (except 230 V units)	Capacitor voltage rating increased by 10% + harmonic suppression reactor	Filters

Fig. L32 : Choice of solutions for limiting harmonics associated with a LV capacitor bank supplied via transformer(s)

K23

10 Implementation of capacitor banks

10.1 Capacitor elements

Technology

The capacitors are dry-type units (i.e. are not impregnated by liquid dielectric) comprising metallized polypropylene self-healing film in the form of a two-film roll. They are protected by a high-quality system (overpressure disconnector used with a high breaking capacity fuse) which switches off the capacitor if an internal fault occurs.

The protection scheme operates as follows:

- A short-circuit through the dielectric will blow the fuse
- Current levels greater than normal, but insufficient to blow the fuse sometimes occur, e.g. due to a microscopic flow in the dielectric film. Such “faults” often re-seal due to local heating caused by the leakage current, i.e. the units are said to be “self-healing”
- If the leakage current persists, the defect may develop into a short-circuit, and the fuse will blow
- Gas produced by vaporizing of the metallisation at the faulty location will gradually build up a pressure within the plastic container, and will eventually operate a pressure-sensitive device to short-circuit the unit, thereby causing the fuse to blow

Capacitors are made of insulating material providing them with double insulation and avoiding the need for a ground connection (see **Fig. L33**).

a)

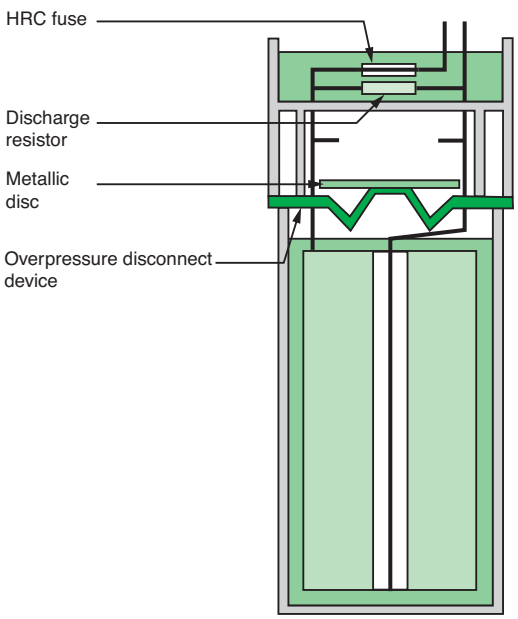

b)

Electrical characteristics			
Standard		IEC 60439-1, NFC 54-104, VDE 0560 CSA Standards, UL tests	
Operating range	Rated voltage	400 V	
	Rated frequency	50 Hz	
Capacitance tolerance		- 5% to + 10%	
Temperature range (up to 65 kvar)	Maximum temperature	55 °C	
	Average temperature over 24 h	45 °C	
	Average annual temperature	35 °C	
	Minimum temperature	- 25 °C	
Insulation level		50 Hz 1 min withstand voltage : 6 kV 1.2/50 µs impulse withstand voltage : 25 kV	
Permissible current overload		Classic range(1)	Comfort range(1)
		30%	50%
Permissible voltage overload		10%	20%

*Fig. L33 : Capacitor element, (**a**) cross-section, (**b**) electrical characteristics*

(1) Merlin-Gerin designation

10 Implementation of capacitor banks

10.2 Choice of protection, control devices and connecting cables

The choice of upstream cables and protection and control devices depends on the current loading.

For capacitors, the current is a function of:
- The applied voltage and its harmonics
- The capacitance value

The nominal current In of a 3-phase capacitor bank is equal to:

$$In = \frac{Q}{Un\sqrt{3}}$$ with:

- Q: kvar rating
- Un: Phase-to-phase voltage (kV)

The permitted range of applied voltage at fundamental frequency, plus harmonic components, together with manufacturing tolerances of actual capacitance (for a declared nominal value) can result in a 50% increase above the calculated value of current. Approximately 30% of this increase is due to the voltage increases, while a further 15% is due to the range of manufacturing tolerances, so that
1.3 x 1.15 = 1.5

All components carrying the capacitor current therefore, must be adequate to cover this “worst-case” condition, in an ambient temperature of 50 °C maximum. In the case where temperatures higher than 50 °C occur in enclosures, etc. derating of the components will be necessary.

Protection

The size of the circuit-breaker can be chosen in order to allow the setting of long time delay at:
- 1.36 x In for Classic range(1)
- 1.50 x In for Comfort range(1)
- 1.12 x In for Harmony range(1) (tuned at 2.7 f)(2)
- 1.19 x In for Harmony range(1) (tuned at 3.8 f)
- 1.31 x In for Harmony range(1) (tuned at 4.3 f)

Short time delay setting (short-circuit protection) must be insensitive to inrush current. The setting will be 10 x In for Classic, Comfort and Harmony range(1).

Example 1

50 kvar – 400V – 50 Hz – Classic range

$$In = \frac{50,000}{(400 \text{ x } 1.732)} = 72 \text{ A}$$

Long time delay setting: 1.36 x 72 = 98 A

Short time delay setting: 10 x In = 720 A

Example 2

50 kvar – 400V – 50 Hz – Harmony range (tuned at 4.3 f)

In = 72 A

Long time delay setting: 1.31 x 72 = 94 A

Short time delay setting: 10 x In = 720 A

Upstream cables

Figure L34 next page gives the minimum cross section area of the upstream cable for Rectiphase capacitors.

Cables for control

The minimum cross section area of these cables will be 1.5 mm^2 for 230 V.

For the secondary side of the transformer, the recommended cross section area is ⩾ 2.5 mm^2.

(1) Merlin-Gerin designation
(2) Harmony capacitor banks are equipped with a harmonic suppression reactor.

10 Implementation of capacitor banks

Bank power (kvar) 230 V	400 V	Copper cross- section (mm^2)	Aluminium cross- section (mm^2)
5	10	2.5	16
10	20	4	16
15	30	6	16
20	40	10	16
25	50	16	25
30	60	25	35
40	80	35	50
50	100	50	70
60	120	70	95
70	140	95	120
90-100	180	120	185
	200	150	240
120	240	185	2 x 95
150	250	240	2 x 120
	300	2 x 95	2 x 150
180-210	360	2 x 120	2 x 185
245	420	2 x 150	2 x 240
280	480	2 x 185	2 x 300
315	540	2 x 240	3 x 185
350	600	2 x 300	3 x 240
385	660	3 x 150	3 x 240
420	720	3 x 185	3 x 300

Fig L34 : Cross-section of cables connecting medium and high power capacitor banks(1)

Voltage transients

High-frequency voltage and current transients occur when switching a capacitor bank into service. The maximum voltage peak does not exceed (in the absence of harmonics) twice the peak value of the rated voltage when switching uncharged capacitors.

In the case of a capacitor being already charged at the instant of switch closure, however, the voltage transient can reach a maximum value approaching 3 times the normal rated peak value.

This maximum condition occurs only if:

- The existing voltage at the capacitor is equal to the peak value of rated voltage, and
- The switch contacts close at the instant of peak supply voltage, and
- The polarity of the power-supply voltage is opposite to that of the charged capacitor

In such a situation, the current transient will be at its maximum possible value, viz: Twice that of its maximum when closing on to an initially uncharged capacitor, as previously noted.

For any other values of voltage and polarity on the pre-charged capacitor, the transient peaks of voltage and current will be less than those mentioned above. In the particular case of peak rated voltage on the capacitor having the same polarity as that of the supply voltage, and closing the switch at the instant of supply-voltage peak, there would be no voltage or current transients.

Where automatic switching of stepped banks of capacitors is considered, therefore, care must be taken to ensure that a section of capacitors about to be energized is fully discharged.

The discharge delay time may be shortened, if necessary, by using discharge resistors of a lower resistance value.

(1) Minimum cross-section not allowing for any correction factors (installation mode, temperature, etc.). The calculations were made for single-pole cables laid in open air at 30 °C.