Chapter M
Harmonic management

Contents

1	**The problem: why is it necessary to detect and eliminate harmonics?**	**M2**
2	**Standards**	**M3**
3	**General**	**M4**
4	**Main effects of harmonics in installations**	**M6**
	4.1 Resonance	M6
	4.2 Increased losses	M6
	4.3 Overloads on equipment	M7
	4.4 Disturbances affecting sensitive loads	M9
	4.5 Economic impact	M10
5	**Essential indicators of harmonic distortion and measurement principles**	**M11**
	5.1 Power factor	M11
	5.2 Crest factor	M11
	5.3 Power values and harmonics	M11
	5.4 Harmonic spectrum and harmonic distortion	M12
	5.5 Total harmonic distortion (THD)	M12
	5.6 Usefulness of the various indicators	M13
6	**Measuring the indicators**	**M14**
	6.1 Devices used to measure the indicators	M14
	6.2 Procedures for harmonic analysis of distribution networks	M14
	6.3 Keeping a close eye on harmonics	M15
7	**Detection devices**	**M16**
8	**Solutions to attenuate harmonics**	**M17**
	8.1 Basic solutions	M17
	8.2 Harmonic filtering	M18
	8.3 The method	M20
	8.4 Specific products	M20

1 The problem: why is it necessary to detect and eliminate harmonics?

Disturbances caused by harmonics

Harmonics flowing in distribution networks downgrade the quality of electrical power. This can have a number of negative effects:

- Overloads on distribution networks due to the increase in rms current
- Overloads in neutral conductors due to the cumulative increase in third-order harmonics created by single-phase loads
- Overloads, vibration and premature ageing of generators, transformers and motors as well as increased transformer hum
- Overloads and premature ageing of power-factor correction capacitors
- Distortion of the supply voltage that can disturb sensitive loads
- Disturbances in communication networks and on telephone lines

Economic impact of disturbances

Harmonics have a major economic impact:

- Premature ageing of equipment means it must be replaced sooner unless oversized right from the start
- Overloads on the distribution network can require higher subscribed power levels and increase losses
- Distortion of current waveforms provokes nuisance tripping that can stop production

Increasingly serious consequences

Only ten years ago, harmonics were not yet considered a real problem because their effects on distribution networks were generally minor. However, the massive introduction of power electronics in equipment has made the phenomenon far more serious in all sectors of economic activity.

In addition, the equipment causing the harmonics is often vital to the company or organisation.

Which harmonics must be measured and eliminated?

The most frequently encountered harmonics in three-phase distribution networks are the odd orders. Harmonic amplitudes normally decrease as the frequency increases. Above order 50, harmonics are negligible and measurements are no longer meaningful. Sufficiently accurate measurements are obtained by measuring harmonics up to order 30.

Utilities monitor harmonic orders 3, 5, 7, 11 and 13. Generally speaking, harmonic conditioning of the lowest orders (up to 13) is sufficient. More comprehensive conditioning takes into account harmonic orders up to 25.

2 Standards

Harmonic emissions are subject to various standards and regulations:
- Compatibility standards for distribution networks
- Emissions standards applying to the equipment causing harmonics
- Recommendations issued by utilities and applicable to installations

In view of rapidly attenuating the effects of harmonics, a triple system of standards and regulations is currently in force based on the documents listed below.

Standards governing compatibility between distribution networks and products

These standards determine the necessary compatibility between distribution networks and products:
- The harmonics caused by a device must not disturb the distribution network beyond certain limits
- Each device must be capable of operating normally in the presence of disturbances up to specific levels
- Standard IEC 61000-2-2 for public low-voltage power supply systems
- Standard IEC 61000-2-4 for LV and MV industrial installations

Standards governing the quality of distribution networks
- Standard EN 50160 stipulates the characteristics of electricity supplied by public distribution networks
- Standard IEEE 519 presents a joint approach between Utilities and customers to limit the impact of non-linear loads. What is more, Utilities encourage preventive action in view of reducing the deterioration of power quality, temperature rise and the reduction of power factor. They will be increasingly inclined to charge customers for major sources of harmonics

Standards governing equipment
- Standard IEC 61000-3-2 or EN 61000-3-2 for low-voltage equipment with rated current under 16 A
- Standard IEC 61000-3-12 for low-voltage equipment with rated current higher than 16 A and lower than 75 A

Maximum permissible harmonic levels

International studies have collected data resulting in an estimation of typical harmonic contents often encountered in electrical distribution networks. **Figure M1** presents the levels that, in the opinion of many utilities, should not be exceeded.

Odd harmonic orders non-multiples of 3				Odd harmonic orders multiples of 3				Even harmonic orders			
Order h	**LV**	**MV**	**EMV**	**Order h**	**LV**	**MV**	**EMV**	**Order h**	**LV**	**MV**	**EMV**
5	6	6	2	3	5	2.5	1.5	2	2	1.5	1.5
7	5	5	2	9	1.5	1.5	1	4	1	1	1
11	3.5	3.5	1.5	15	0.3	0.3	0.3	6	0.5	0.5	0.5
13	3	3	1.5	21	0.2	0.2	0.2	8	0.5	0.2	0.2
17	2	2	1	> 21	0.2	0.2	0.2	10	0.5	0.2	0.2
19	1.5	1.5	1					12	0.2	0.2	0.2
23	1.5	1	0.7					> 12	0.2	0.2	0.2
25	1.5	1	0.7								
> 25	0.2 + 25/h	0.2 + 25/h	0.1 + 25/h								

Fig. M1 : Maximum permissible harmonic levels

3 General

The presence of harmonics indicates a distorted current or voltage wave. The distortion of the current or voltage wave means that the distribution of electrical energy is disturbed and power quality is not optimum.

Harmonic currents are caused by non-linear loads connected to the distribution network. The flow of harmonic currents causes harmonic voltages via distribution-network impedances and consequently distortion of the supply voltage.

Origin of harmonics

Devices and systems that cause harmonics are present in all sectors, i.e. industrial, commercial and residential. Harmonics are caused by non-linear loads (i.e. loads that draw current with a waveform that is not the same as that of the supply voltage).

Examples of non-linear loads are:

- Industrial equipment (welding machines, arc furnaces, induction furnaces, rectifiers)
- Variable-speed drives for asynchronous or DC motors
- UPSs
- Office equipment (computers, photocopy machines, fax machines, etc.)
- Home appliances (television sets, micro-wave ovens, fluorescent lighting)
- Certain devices involving magnetic saturation (transformers)

Disturbances caused by non-linear loads: harmonic current and voltage

Non-linear loads draw harmonic currents that flow in the distribution network. Harmonic voltages are caused by the flow of harmonic currents through the impedances of the supply circuits (transformer and distribution network for situations similar to that shown in **Figure M2**).

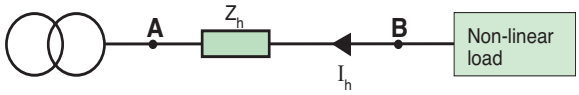

Fig. M2 : Single-line diagram showing the impedance of the supply circuit for a harmonic of order h

The reactance of a conductor increases as a function of the frequency of the current flowing through the conductor. For each harmonic current (order h), there is therefore an impedance Zh in the supply circuit.

When the harmonic current of order h flows through impedance Zh, it creates a harmonic voltage Uh, where Uh = Zh x Ih (Ohm law). The voltage at point B is therefore distorted. All devices supplied via point B receive a distorted voltage.

For a given harmonic current, the distortion is proportional to the impedance in the distribution network.

Flow of harmonic currents in distribution networks

The non-linear loads can be considered to reinject the harmonic currents upstream into the distribution network, toward the source.

Figures M3 and **M4** next page show an installation disturbed by harmonics. Figure M3 shows the flow of the current at 50 Hz in the installation and Figure M4 shows the harmonic current (order h).

3 General

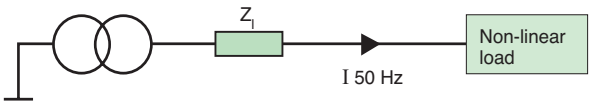

Fig. M3 : Installation supplying a non-linear load, where only the phenomena concerning the 50 Hz frequency (fundamental frequency) are shown

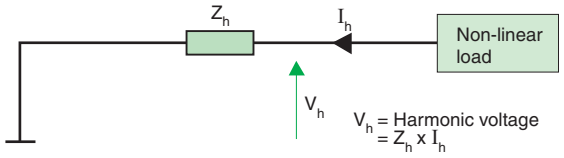

Fig. M4 : Same installation, where only the phenomena concerning the frequency of harmonic order h are shown

Supply of the non-linear load creates the flow of a current I_{50Hz} (shown in figure M3), to which is added each of the harmonic currents Ih (shown in figure M4), corresponding to each harmonic order h.

Still considering that the loads reinject harmonic current upstream into the distribution network, it is possible to create a diagram showing the harmonic currents in the network (see **Fig. M5**).

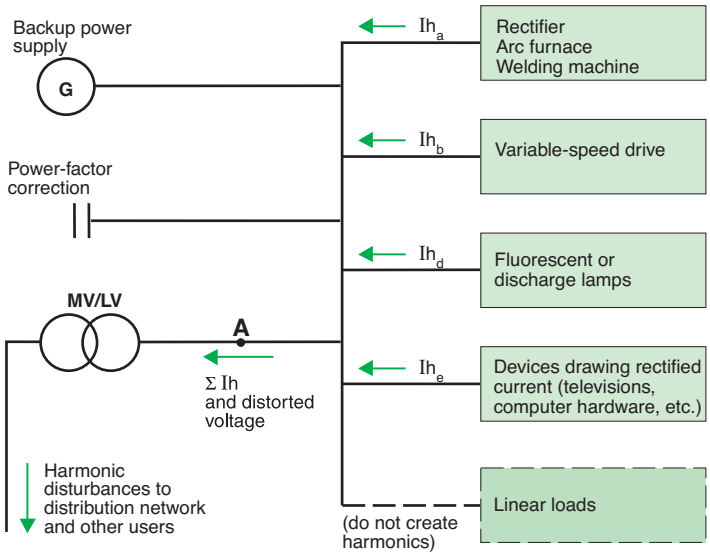

Note in the diagram that though certain loads create harmonic currents in the distribution network, other loads can absorb the harmonic currents.

Fig. M5 : Flow of harmonic currents in a distribution network

Harmonics have major economic effects in installations:
- Increases in energy costs
- Premature ageing of equipment
- Production losses

4 Main effects of harmonics in installations

4.1 Resonance

The simultaneous use of capacitive and inductive devices in distribution networks results in parallel or series resonance manifested by very high or very low impedance values respectively. The variations in impedance modify the current and voltage in the distribution network. Here, only parallel resonance phenomena, the most common, will be discussed.

Consider the following simplified diagram (see **Fig. M6**) representing an installation made up of:

- A supply transformer
- Linear loads
- Non-linear loads drawing harmonic currents
- Power factor correction capacitors

For harmonic analysis, the equivalent diagram (see **Fig. M7**) is shown below. Impedance Z is calculated by:

$$Z = \frac{jLs\omega}{1-LsC\omega^2}$$

neglecting R and where:

Ls = Supply inductance (upstream network + transformer + line)

C = Capacitance of the power factor correction capacitors

R = Resistance of the linear loads

Ih = Harmonic current

Resonance occurs when the denominator $1-LsCw^2$ tends toward zero. The corresponding frequency is called the resonance frequency of the circuit. At that frequency, impedance is at its maximum and high amounts of harmonic voltages appear with the resulting major distortion in the voltage. The voltage distortion is accompanied, in the Ls+C circuit, by the flow of harmonic currents greater than those drawn by the loads.

The distribution network and the power factor correction capacitors are subjected to high harmonic currents and the resulting risk of overloads. To avoid resonance, anti-harmonic coils can be installed in series with the capacitors.

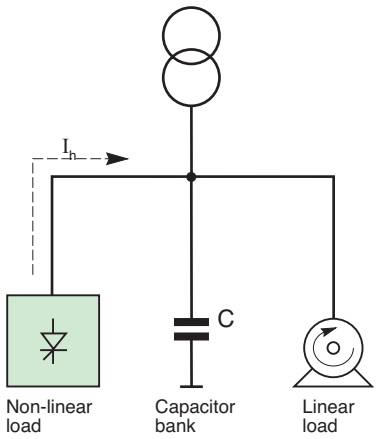

Fig. M6 : Diagram of an installation

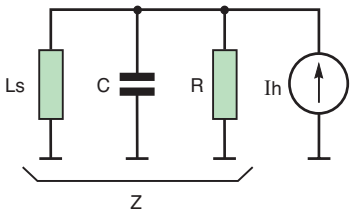

Fig. M7 : Equivalent diagram of the installation shown in Figure M6

4.2 Increased losses

Losses in conductors

The active power transmitted to a load is a function of the fundamental component I1 of the current.

When the current drawn by the load contains harmonics, the rms value of the current, Irms, is greater than the fundamental I1.

The definition of THD being:

$$THD = \sqrt{\left(\frac{Irms}{I1}\right)^2 - 1}$$

it may be deduced that: $Irms = I1\sqrt{1+THD^2}$

Figure M8 (next page) shows, as a function of the harmonic distortion:

- The increase in the rms current Irms for a load drawing a given fundamental current
- The increase in Joule losses, not taking into account the skin effect

(The reference point in the graph is 1 for Irms and Joules losses, the case when there are no harmonics)

The harmonic currents provoke an increase in the Joule losses in all conductors in which they flow and additional temperature rise in transformers, devices, cables, etc.

Losses in asynchronous machines

The harmonic voltages (order h) supplied to asynchronous machines provoke in the rotor the flow of currents with frequencies higher than 50 Hz that are the cause of additional losses.

4 Main effects of harmonics in installations

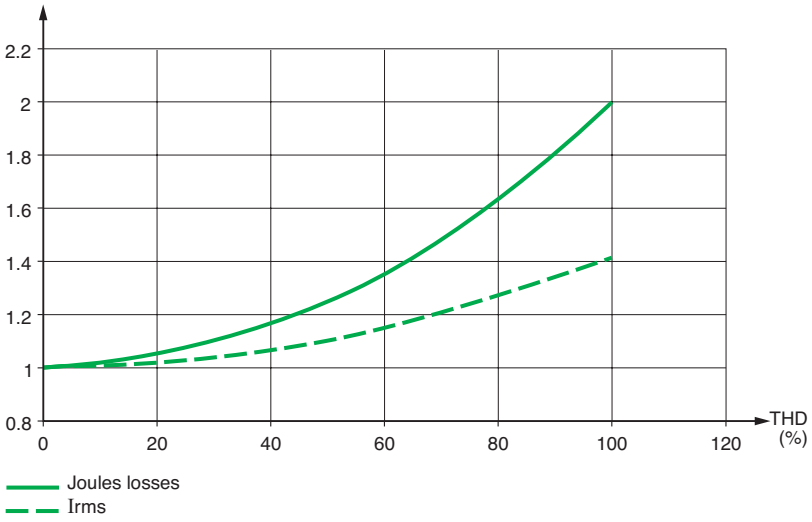

Fig. M8 : Increase in rms current and Joule losses as a function of the THD

Orders of magnitude

- A virtually rectangular supply voltage provokes a **20% increase** in losses
- A supply voltage with harmonics u5 = 8% (of U1, the fundamental voltage), u7 = 5%, u11 = 3%, u13 = 1%, i.e. total harmonic distortion THDu equal to 10%, results in additional losses of 6%

Losses in transformers

Harmonic currents flowing in transformers provoke an increase in the “copper” losses due to the Joule effect and increased “iron” losses due to eddy currents. The harmonic voltages are responsible for “iron” losses due to hysteresis.

It is generally considered that losses in windings increase as the square of the THDi and that core losses increase linearly with the THDu.

In utility-distribution transformers, where distortion levels are limited, losses increase between 10 and 15%.

Losses in capacitors

The harmonic voltages applied to capacitors provoke the flow of currents proportional to the frequency of the harmonics. These currents cause additional losses.

Example

A supply voltage has the following harmonics:
Fundamental voltage U1, harmonic voltages u5 = 8% (of U1), u7 = 5%, u11 = 3%, u13 = 1%, i.e. total harmonic distortion THDu equal to 10%. The amperage of the current is multiplied by 1.19. Joule losses are multiplied by 1.19^2, i.e. 1.4.

4.3 Overloads on equipment

Generators

Generators supplying non-linear loads must be derated due to the additional losses caused by harmonic currents.

The level of derating is approximately 10% for a generator where the overall load is made up of 30% of non-linear loads. It is therefore necessary to oversize the generator.

Uninterruptible power systems (UPS)

The current drawn by computer systems has a very high crest factor. A UPS sized taking into account exclusively the rms current may not be capable of supplying the necessary peak current and may be overloaded.

4 Main effects of harmonics in installations

Transformers

■ The curve presented below (see **Fig. M9**) shows the typical derating required for a transformer supplying electronic loads

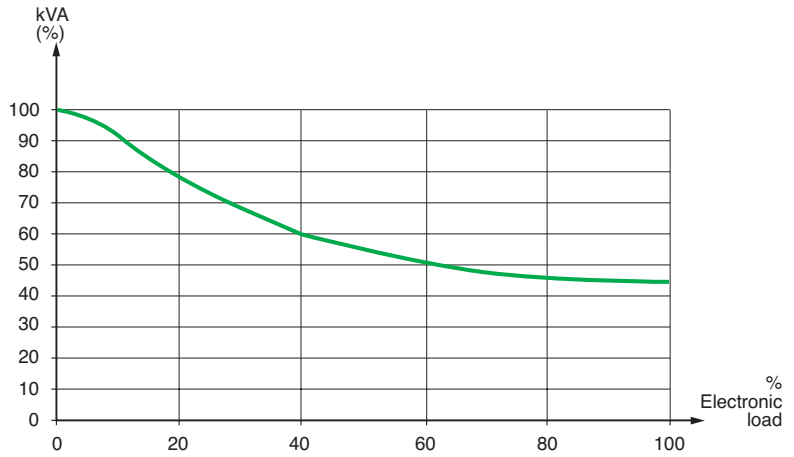

Fig. M9 : Derating required for a transformer supplying electronic loads

Example

If the transformer supplies an overall load comprising 40% of electronic loads, it must be derated by 40%.

■ Standard UTE C15-112 provides a derating factor for transformers as a function of the harmonic currents.

$$k = \frac{1}{\sqrt{1 + 0.1\left(\sum_{h=2}^{40} h^{1.6}\, T_h^2\right)}}$$

$$T_h = \frac{I_h}{I_1}$$

Typical values:

■ Current with a rectangular waveform (1/h spectrum [1]): k = 0.86

■ Frequency-converter current (THD ≈ 50%): k = 0.80

Asynchronous machines

Standard IEC 60892 defines a weighted harmonic factor (Harmonic voltage factor) for which the equation and maximum value are provided below.

$$HVF = \sqrt{\sum_{h=2}^{13} \frac{U_h}{h^2}} \leqslant 0.02$$

Example

A supply voltage has a fundamental voltage U1 and harmonic voltages u3 = 2% of U1, u5 = 3%, u7 = 1%. The THDu is 3.7% and the MVF is 0.018. The MVF value is very close to the maximum value above which the machine must be derated. Practically speaking, for supply to the machine, a THDu of 10% must not be exceeded.

Capacitors

According to IEC 60831-1 standard, the rms current flowing in the capacitors must not exceed 1.3 times the rated current.

Using the example mentioned above, the fundamental voltage U1, harmonic voltages u5 = 8% (of U1), u7 = 5%, u11 = 3%, u13 = 1%, i.e. total harmonic distortion THDu equal to 10%, the result is $\frac{Irms}{I1} = 1.19$, at the rated voltage. For a voltage equal to 1.1 times the rated voltage, the current limit $\frac{Irms}{I1} = 1.3$ is reached and it is necessary to resize the capacitors.

(1) In fact, the current waveform is similar to a rectangular waveform. This is the case for all current rectifiers (three-phase rectifiers, induction furnaces).

4 Main effects of harmonics in installations

Neutral conductors

Consider a system made up of a balanced three-phase source and three identical single-phase loads connected between the phases and the neutral (see **Fig. M10**). **Figure M11** shows an example of the currents flowing in the three phases and the resulting current in the neutral conductor.

In this example, the current in the neutral conductor has an rms value that is higher than the rms value of the current in a phase by a factor equal to the square root of 3. The neutral conductor must therefore be sized accordingly.

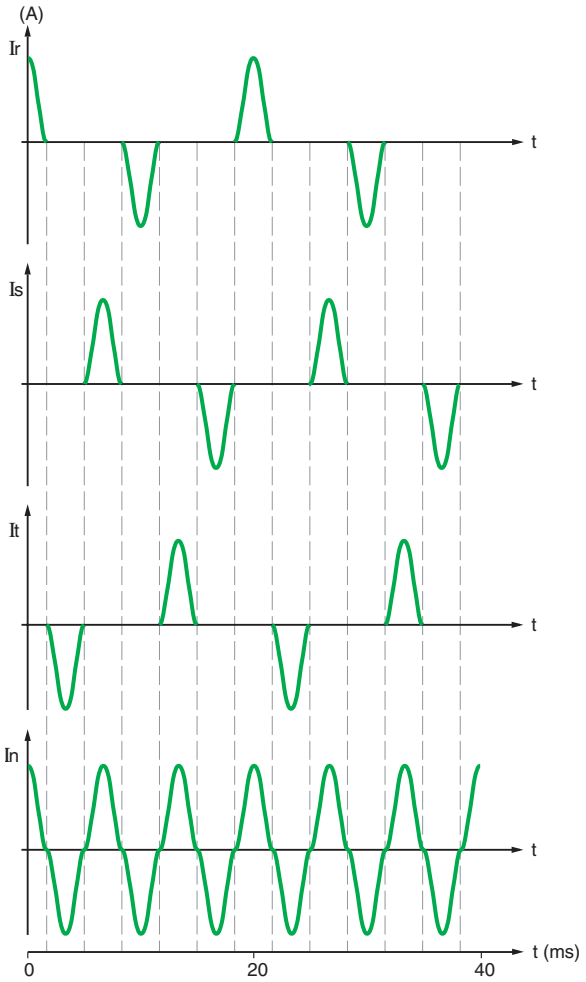

Fig. M11 : Example of the currents flowing in the various conductors connected to a three-phase load (In = Ir + Is + It)

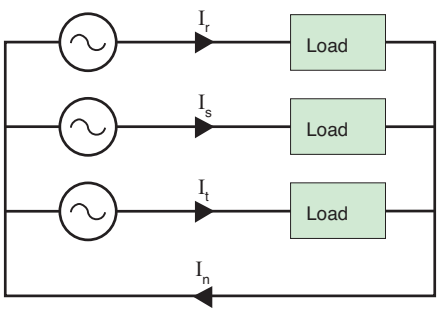

Fig. M10 : Flow of currents in the various conductors connected to a three-phase source

4.4 Disturbances affecting sensitive loads

Effects of distortion in the supply voltage

Distortion of the supply voltage can disturb the operation of sensitive devices:
- Regulation devices (temperature)
- Computer hardware
- Control and monitoring devices (protection relays)

Distortion of telephone signals

Harmonics cause disturbances in control circuits (low current levels). The level of distortion depends on the distance that the power and control cables run in parallel, the distance between the cables and the frequency of the harmonics.

4 Main effects of harmonics in installations

4.5 Economic impact

Energy losses

Harmonics cause additional losses (Joule effect) in conductors and equipment.

Higher subscription costs

The presence of harmonic currents can require a higher subscribed power level and consequently higher costs.

What is more, utilities will be increasingly inclined to charge customers for major sources of harmonics.

Oversizing of equipment

- Derating of power sources (generators, transformers and UPSs) means they must be oversized
- Conductors must be sized taking into account the flow of harmonic currents. In addition, due the the skin effect, the resistance of these conductors increases with frequency. To avoid excessive losses due to the Joule effect, it is necessary to oversize conductors
- Flow of harmonics in the neutral conductor means that it must be oversized as well

Reduced service life of equipment

When the level of distortion in the supply voltage approaches 10%, the duration of the service life of equipment is significantly reduced. The reduction has been estimated at:

- 32.5% for single-phase machines
- 18% for three-phase machines
- 5% for transformers

To maintain the service lives corresponding to the rated load, equipment must be oversized.

Nuisance tripping and installation shutdown

Circuit-breakers in the installation are subjected to current peaks caused by harmonics.

These current peaks cause nuisance tripping with the resulting production losses, as well as the costs corresponding to the time required to start the installation up again.

Examples

Given the economic consequences for the installations mentioned below, it was necessary to install harmonic filters.

Computer centre for an insurance company

In this centre, nuisance tripping of a circuit-breaker was calculated to have cost 100 k€ per hour of down time.

Pharmaceutical laboratory

Harmonics caused the failure of a generator set and the interruption of a long-duration test on a new medication. The consequences were a loss estimated at 17 M€.

Metallurgy factory

A set of induction furnaces caused the overload and destruction of three transformers ranging from 1500 to 2500 kVA over a single year. The cost of the interruptions in production were estimated at 20 k€ per hour.

Factory producing garden furniture

The failure of variable-speed drives resulted in production shutdowns estimated at 10 k€ per hour.

5 Essential indicators of harmonic distortion and measurement principles

A number of indicators are used to quantify and evaluate the harmonic distortion in current and voltage waveforms, namely:

- Power factor
- Crest factor
- Distortion power
- Harmonic spectrum
- Harmonic-distortion values

These indicators are indispensable in determining any necessary corrective action.

5.1 Power factor

Definition

The power factor PF is the ratio between the active power P and the apparent power S.

$$PF = \frac{P}{S}$$

Among electricians, there is often confusion with:

$$\cos \varphi = \frac{P1}{S1}$$

Where

P1 = active power of the fundamental

S1 = apparent power of the fundamental

The cos φ concerns exclusively the fundamental frequency and therefore differs from the power factor PF when there are harmonics in the installation.

Interpreting the power factor

An initial indication that there are significant amounts of harmonics is a measured power factor PF that is different (lower) than the measured cos φ.

5.2 Crest factor

Definition

The crest factor is the ratio between the value of the peak current or voltage (Im or Um) and its rms value.

- For a sinusoidal signal, the crest factor is therefore equal to $\sqrt{2}$.
- For a non-sinusoidal signal, the crest factor can be either greater than or less than $\sqrt{2}$.

In the latter case, the crest factor signals divergent peak values with respect to the rms value.

Interpretation of the crest factor

The typical crest factor for the current drawn by non-linear loads is much higher than $\sqrt{2}$. It is generally between 1.5 and 2 and can even reach 5 in critical cases. A high crest factor signals high transient overcurrents which, when detected by protection devices, can cause nuisance tripping.

5.3 Power values and harmonics

Active power

The active power P of a signal comprising harmonics is the sum of the active powers resulting from the currents and voltages of the same order.

Reactive power

Reactive power is defined exclusively in terms of the fundamental, i.e.

$$Q = U1 \times I1 \times \sin\varphi 1$$

Distortion power

When harmonics are present, the distortion power D is defined as $D = (S^2 - P^2 - Q^2)^{1/2}$ where S is the apparent power.

5 Essential indicators of harmonic distortion and measurement principles

5.4 Harmonic spectrum and harmonic distortion

Principle

Each type of device causing harmonics draws a particular form of harmonic current (amplitude and phase displacement).
These values, notably the amplitude for each harmonic order, are essential for analysis.

Individual harmonic distortion (or harmonic distortion of order h)

The individual harmonic distortion is defined as the percentage of harmonics for order h with respect to the fundamental.

$$u_h(\%) = 100\frac{U_h}{U_1}$$

or

$$i_h(\%) = 100\frac{I_h}{I_1}$$

Harmonic spectrum

By representing the amplitude of each harmonic order with respect to its frequency, it is possible to obtain a graph called the harmonic spectrum.

Figure M12 shows an example of the harmonic spectrum for a rectangular signal.

Rms value

The rms value of the voltage and current can be calculated as a function of the rms value of the various harmonic orders.

$$Irms = \sqrt{\sum_{h=1}^{\infty} I_h^2}$$

and

$$Urms = \sqrt{\sum_{h=1}^{\infty} U_h^2}$$

M12

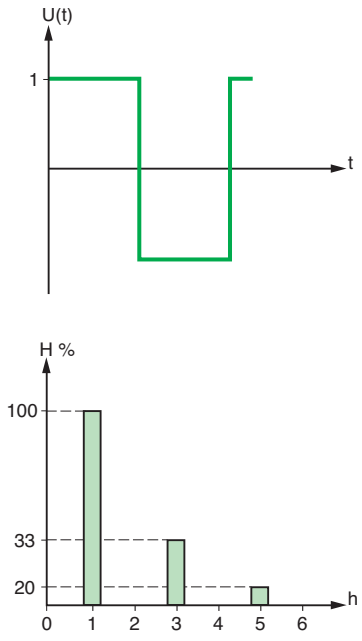

Fig. M12 : Harmonic spectrum of a rectangular signal, for a voltage U (t)

5.5 Total harmonic distortion (THD)

The term THD means Total Harmonic Distortion and is a widely used notion in defining the level of harmonic content in alternating signals.

Definition of THD

For a signal y, the THD is defined as:

$$THD = \frac{\sqrt{\sum_{h=2}^{\infty} y_h^2}}{y_1}$$

This complies with the definition given in standard IEC 61000-2-2.

Note that the value can exceed 1.

According to the standard, the variable h can be limited to 50. The THD is the means to express as a single number the distortion affecting a current or voltage flowing at a given point in the installation.

The THD is generally expressed as a percentage.

Current or voltage THD

For current harmonics, the equation is:

$$THD_i = \frac{\sqrt{\sum_{h=2}^{\infty} I_h^2}}{I_1}$$

5 Essential indicators of harmonic distortion and measurement principles

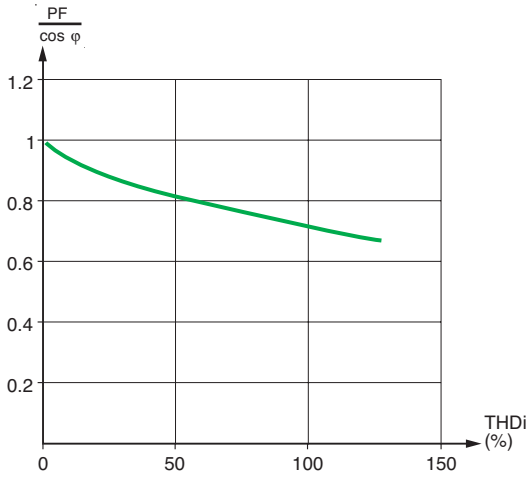

Fig. M13 : Variation in $\frac{PF}{\cos\varphi}$ *as a function of the THDi, where THDu = 0*

The equation below is equivalent to the above, but easier and more direct when the total rms value is available:

$$THD_i = \sqrt{\left(\frac{I_{rms}}{I_1}\right)^2 - 1}$$

For voltage harmonics, the equation is:

$$THD_u = \frac{\sqrt{\sum_{h=2}^{\infty} U_h^2}}{U_1}$$

Relation between power factor and THD (see **Fig. M13**)

When the voltage is sinusoidal or virtually sinusoidal, it may be said that:

$$P \approx P_1 = U_1.I_1.\cos\varphi_1$$

Consequently : $PF = \frac{P}{S} \approx \frac{U_1.I_1.\cos\varphi_1}{U_1.I_{rms}}$

as: $\frac{I_1}{I_{rms}} = \frac{1}{\sqrt{1+THDi^2}}$

hence: $PF \approx \frac{\cos\varphi_1}{\sqrt{1+THDi^2}}$

Figure M13 shows a graph of $\frac{PF}{\cos\varphi}$ as a function of THDi.

5.6 Usefulness of the various indicators

The THDu characterises the distortion of the voltage wave.

Below are a number of THDu values and the corresponding phenomena in the installation:
- THDu under 5% - normal situation, no risk of malfunctions
- 5 to 8% - significant harmonic pollution, some malfunctions are possible
- Higher than 8% - major harmonic pollution, malfunctions are probable. In-depth analysis and the installation of attenuation devices are required

The THDi characterises the distortion of the current wave.

The disturbing device is located by measuring the THDi on the incomer and each outgoer of the various circuits and thus following the harmonic trail.

Below are a number of THDi values and the corresponding phenomena in the installation:
- THDi under 10% - normal situation, no risk of malfunctions
- 10 to 50% - significant harmonic pollution with a risk of temperature rise and the resulting need to oversize cables and sources
- Higher than 50% - major harmonic pollution, malfunctions are probable. In-depth analysis and the installation of attenuation devices are required

Power factor PF

Used to evaluate the necessary oversizing for the power source of the installation.

Crest factor

Used to characterise the aptitude of a generator (or UPS) to supply high instantaneous currents. For example, computer equipment draws highly distorted current for which the crest factor can reach 3 to 5.

Spectrum (decomposition of the signal into frequencies)

It provides a different representation of electrical signals and can be used to evaluate their distortion.

6 Measuring the indicators

6.1 Devices used to measure the indicators

Device selection

The traditional observation and measurement methods include:

■ Observations using an oscilloscope

An initial indication on the distortion affecting a signal can be obtained by viewing the current or the voltage on an oscilloscope.

The waveform, when it diverges from a sinusoidal, clearly indicates the presence of harmonics. Current and voltage peaks can be viewed.

Note, however, that this method does not offer precise quantification of the harmonic components

■ Analogue spectral analysers

They are made up of passband filters coupled with an rms voltmeter. They offer mediocre performance and do not provide information on phase displacement.

Only the recent digital analysers can determine sufficiently precisely the values of all the mentioned indicators.

Functions of digital analysers

The microprocessors in digital analysers:

■ Calculate the values of the harmonic indicators (power factor, crest factor, distortion power, THD)

■ Carry out various complementary functions (corrections, statistical detection, measurement management, display, communication, etc.)

■ In multi-channel analysers, supply virtually in real time the simultaneous spectral decomposition of the currents and voltages

Analyser operation and data processing

The analogue signals are converted into a series of numerical values.

Using this data, an algorithm implementing the Fast Fourier Transform (FFT) calculates the amplitudes and the phases of the harmonics over a large number of time windows.

Most digital analysers measure harmonics up to order 20 or 25 when calculating the THD.

Processing of the successive values calculated using the FFT (smoothing, classification, statistics) can be carried out by the measurement device or by external software.

6.2 Procedures for harmonic analysis of distribution networks

Measurements are carried out on industrial or commercial site:

■ Preventively, to obtain an overall idea on distribution-network status (network map)

■ In view of corrective action:

□ To determine the origin of a disturbance and determine the solutions required to eliminate it

□ To check the validity of a solution (followed by modifications in the distribution network to check the reduction in harmonics)

Operating mode

The current and voltage are studied:

■ At the supply source

■ On the busbars of the main distribution switchboard (or on the MV busbars)

■ On each outgoing circuit in the main distribution switchboard (or on the MV busbars)

For the measurements, it is necessary to know the precise operating conditions of the installation and particularly the status of the capacitor banks (operating, not operating, the number of disconnected steps).

Analysis results

■ Determine any necessary derating of equipment in the installation or

■ Quantify any necessary harmonic protection and filtering systems to be installed in the distribution network

■ Enable comparison between the measured values and the reference values of the utility (maximum harmonic values, acceptable values, reference values)

6 Measuring the indicators

Use of measurement devices

Measurement devices serve to show both the instantaneous and long-term effects of harmonics. Analysis requires values spanning durations ranging from a few seconds to several minutes over observation periods of a number of days.

The required values include:

- The amplitudes of the harmonic currents and voltages
- The individual harmonic content of each harmonic order of the current and voltage
- The THD for the current and voltage
- Where applicable, the phase displacement between the harmonic voltage and current of the same harmonic order and the phase of the harmonics with respect to a common reference (e.g. the fundamental voltage)

6.3 Keeping a close eye on harmonics

The harmonic indicators can be measured:

- Either by devices permanently installed in the distribution network
- Or by an expert present at least a half day on the site (limited perception)

Permanent devices are preferable

For a number of reasons, the installation of permanent measurement devices in the distribution network is preferable.

- The presence of an expert is limited in time. Only a number of measurements at different points in the installation and over a sufficiently long period (one week to a month) provide an overall view of operation and take into account all the situations that can occur following:
  - Fluctuations in the supply source
  - Variations in the operation of the installation
  - The addition of new equipment in the installation
- Measurement devices installed in the distribution network prepare and facilitate the diagnosis of the experts, thus reducing the number and duration of their visits
- Permanent measurement devices detect any new disturbances arising following the installation of new equipment, the implementation of new operating modes or fluctuations in the supply network

M15

Take advantage of built-in measurement and detection devices

Measurement and detection devices built into the electrical distribution equipment:

- For an overall evaluation of network status (preventive analysis), avoid:
  - Renting measurement equipment
  - Calling in experts
  - Having to connect and disconnect the measurement equipment.

For the overall evaluation of network status, the analysis on the main low-voltage distribution switchboards (MLVS) can often be carried out by the incoming device and/or the measurement devices equipping each outgoing circuit

- For corrective action, are the means to:
  - Determine the operating conditions at the time of the incident
  - Draw up a map of the distribution network and evaluate the implemented solution

The diagnosis is improved by the use of equipment intended for the studied problem.

7 Detection devices

PowerLogic System with Power Meter and Circuit Monitor, Micrologic offer a complete range of devices for the detection of harmonic distortion



***Fig. M14** : Circuit monitor*



***Fig. M15** : Micrologic H control unit with harmonic metering for Masterpact NT and NW circuit-breakers*

Measurements are the first step in gaining control over harmonic pollution. Depending on the conditions in each installation, different types of equipment provide the necessary solution.

Power-monitoring units

Power Meter and Circuit Monitor in the PowerLogic System

These products offer high-performance measurement capabilities for low and medium-voltage distribution networks. They are digital units that include power-quality monitoring functions.

PowerLogic System is a complete offer comprising Power Meter (PM) and Circuit Monitor (CM). This highly modular offer covers needs ranging from the most simple (Power Meter) up to highly complex requirements (Circuit Monitor). These products can be used in new or existing installations where the level of power quality must be excellent. The operating mode can be local and/or remote.

Depending on its position in the distribution network, a Power Meter provides an initial indication on power quality. The main measurements carried out by a Power Meter are:
- Current and voltage THD
- Power factor

Depending on the version, these measurements can be combined with time-stamping and alarm functions.

A Circuit Monitor (see **Fig. M14**) carries out a detailed analysis of power quality and also analyses disturbances on the distribution network. The main functions of a Circuit Monitor are:
- Measurement of over 100 electrical parameters
- Storage in memory and time-stamping of minimum and maximum values for each electrical parameter
- Alarm functions tripped by electrical parameter values
- Recording of event data
- Recording of current and voltage disturbances
- Harmonic analysis
- Waveform capture (disturbance monitoring)

Micrologic - a power-monitoring unit built into the circuit-breaker

For new installations, the Micrologic H control unit (see **Fig. M15**), an integral part of Masterpact power circuit-breakers, is particularly useful for measurements at the head of an installation or on large outgoing circuits.

The Micrologic H control unit offers precise analysis of power quality and detailed diagnostics on events. It is designed for operation in conjunction with a switchboard display unit or a supervisor. It can:
- Measure current, voltage, active and reactive power
- Measure current and voltage THD
- Display the amplitude and phase of current and voltage harmonics up to the 51st order
- Carry out waveform capture (disturbance monitoring)

The functions offered by the Micrologic H control unit are equivalent to those of a Circuit Monitor.

Operation of power-monitoring units

Software for remote operation and analysis

In the more general framework of a distribution network requiring monitoring, the possibility of interconnecting these various devices can be offered in a communication network, thus making it possible to centralise information and obtain an overall view of disturbances throughout the distribution network.

Depending on the application, the operator can then carry out measurements in real time, calculate demand values, run waveform captures, anticipate on alarms, etc.

The power-monitoring units transmit all the available data over either a Modbus, Digipact or Ethernet network.

The essential goal of this system is to assist in identifying and planning maintenance work. It is an effective means to reduce servicing time and the cost of temporarily installing devices for on-site measurements or the sizing of equipment (filters).

Supervision software SMS

SMS is a very complete software used to analyse distribution networks, in conjunction with the products in the PowerLogic System. Installed on a standard PC, it can:
- Display measurements in real time
- Display historical logs over a given period
- Select the manner in which data is presented (tables, various curves)
- Carry out statistical processing of data (display bar charts)

8 Solutions to attenuate harmonics

There are three different types of solutions to attenuate harmonics:
- Modifications in the installation
- Special devices in the supply system
- Filtering

8.1 Basic solutions

To limit the propagation of harmonics in the distribution network, different solutions are available and should be taken into account particularly when designing a new installation.

Position the non-linear loads upstream in the system

Overall harmonic disturbances increase as the short-circuit power decreases.
All economic considerations aside, it is preferable to connect the non-linear loads as far upstream as possible (see **Fig. M16**).

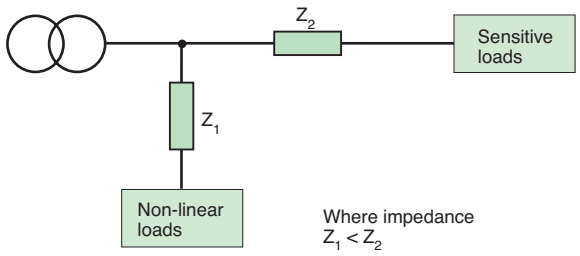

Fig. M16 : Non-linear loads positioned as far upstream as possible (recommended layout)

Group the non-linear loads

When preparing the single-line diagram, the non-linear devices should be separated from the others (see **Fig. M17**). The two groups of devices should be supplied by different sets of busbars.

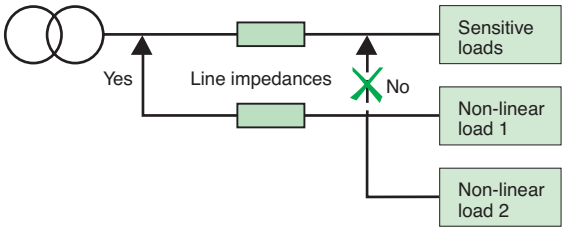

Fig. M17 : Grouping of non-linear loads and connection as far upstream as possible (recommended layout)

Create separate sources

In attempting to limit harmonics, an additional improvement can be obtained by creating a source via a separate transformer as indicated in the **Figure M18** next page.

The disadvantage is the increase in the cost of the installation.

8 Solutions to attenuate harmonics

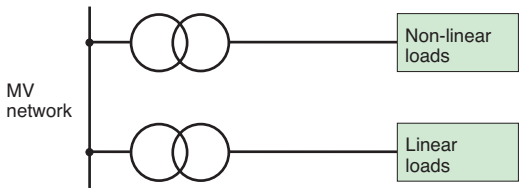

Fig. M18 : Supply of non-linear loads via a separate transformer

Transformers with special connections

Different transformer connections can eliminate certain harmonic orders, as indicated in the examples below:

- A Dyd connection suppresses 5th and 7th harmonics (see **Fig. M19**)
- A Dy connection suppresses the 3rd harmonic
- A DZ 5 connection suppresses the 5th harmonic

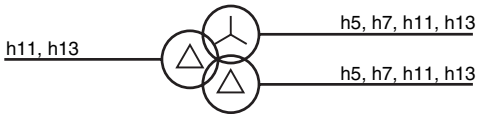

Fig. M19 : A Dyd transformer blocks propagation of the 5th and 7th harmonics to the upstream network

Install reactors

When variable-speed drives are supplied, it is possible to smooth the current by installing line reactors. By increasing the impedance of the supply circuit, the harmonic current is limited.

Installation of harmonic suppression reactors on capacitor banks increases the impedance of the reactor/capacitor combination for high-order harmonics.

This avoids resonance and protects the capacitors.

Select the suitable system earthing arrangement

TNC system

In the TNC system, a single conductor (PEN) provides protection in the event of an earth fault and the flow of unbalance currents.

Under steady-state conditions, the harmonic currents flow in the PEN. The latter, however, has a certain impedance with as a result slight differences in potential (a few volts) between devices that can cause electronic equipment to malfunction.

The TNC system must therefore be reserved for the supply of power circuits at the head of the installation and must not be used to supply sensitive loads.

TNS system

This system is recommended if harmonics are present.

The neutral conductor and the protection conductor PE are completely separate and the potential throughout the distribution network is therefore more uniform.

8.2 Harmonic filtering

In cases where the preventive action presented above is insufficient, it is necessary to equip the installation with filtering systems.

There are three types of filters:

- Passive
- Active
- Hybrid

8 Solutions to attenuate harmonics

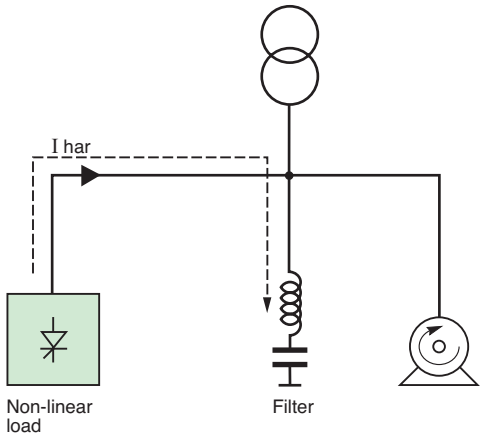

Fig. M20 : Operating principle of a passive filter

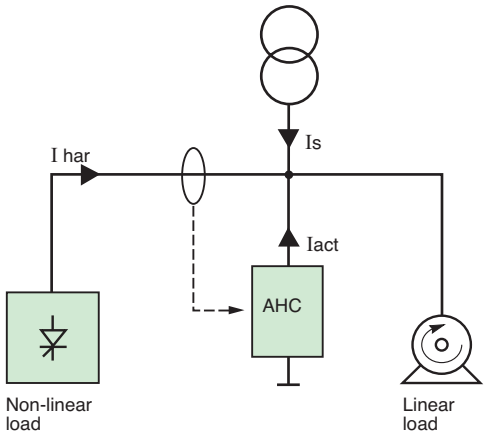

Fig. M21 : Operating principle of an active filter

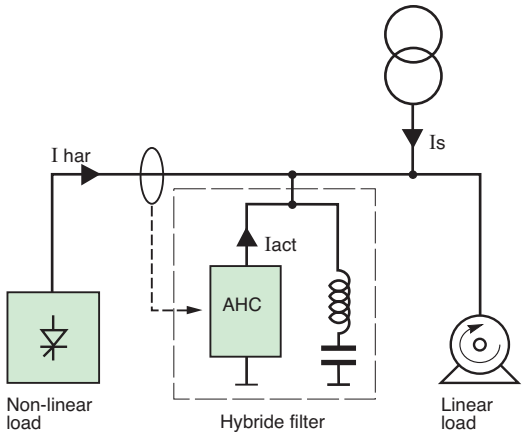

Fig. M22 : Operating principle of a hybrid filter

Passive filters

Typical applications

- Industrial installations with a set of non-linear loads representing more than 200 kVA (variable-speed drives, UPSs, rectifiers, etc.)
- Installations requiring power-factor correction
- Installations where voltage distortion must be reduced to avoid disturbing sensitive loads
- Installations where current distortion must be reduced to avoid overloads

Operating principle

An LC circuit, tuned to each harmonic order to be filtered, is installed in parallel with the non-linear load (see **Fig. M20**). This bypass circuit absorbs the harmonics, thus avoiding their flow in the distribution network.

Generally speaking, the passive filter is tuned to a harmonic order close to the order to be eliminated. Several parallel-connected branches of filters can be used if a significant reduction in the distortion of a number of harmonic orders is required.

Active filters (active harmonic conditioner)

Typical applications

- Commercial installations with a set of non-linear loads representing less than 200 kVA (variable-speed drives, UPSs, office equipment, etc.)
- Installations where current distortion must be reduced to avoid overloads.

Operating principle

These systems, comprising power electronics and installed in series or parallel with the non-linear load, compensate the harmonic current or voltage drawn by the load.

Figure M21 shows a parallel-connected active harmonic conditioner (AHC) compensating the harmonic current (Ihar = -Iact).

The AHC injects in opposite phase the harmonics drawn by the non-linear load, such that the line current Is remains sinusoidal.

Hybrid filters

Typical applications

- Industrial installations with a set of non-linear loads representing more than 200 kVA (variable-speed drives, UPSs, rectifiers, etc.)
- Installations requiring power-factor correction
- Installations where voltage distortion must be reduced to avoid disturbing sensitive loads
- Installations where current distortion must be reduced to avoid overloads
- Installations where strict limits on harmonic emissions must be met

Operating principle

Passive and active filters are combined in a single system to constitute a hybrid filter (see **Fig. M22**). This new filtering solution offers the advantages of both types of filters and covers a wide range of power and performance levels.

Selection criteria

Passive filter

It offers both power-factor correction and high current-filtering capacity.
Passive filters also reduce the harmonic voltages in installations where the supply voltage is disturbed. If the level of reactive power supplied is high, it is advised to turn off the passive filter at times when the percent load is low.
Preliminary studies for a filter must take into account the possible presence of a power factor correction capacitor bank which may have to be eliminated.

Active harmonic conditioners

They filter harmonics over a wide range of frequencies and can adapt to any type of load.
On the other hand, power ratings are low.

Hybrid filters

They combine the performance of both active and passive filters.

8 Solutions to attenuate harmonics

A complete set of services can be offered to eliminate harmonics:
- *Installation analysis*
- *Measurement and monitoring systems*
- *Filtering solutions*

8.3 The method

The best solution, in both technical and financial terms, is based on the results of an in-depth study.

Harmonic audit of MV and LV networks

By calling on an expert, you are guaranteed that the proposed solution will produce effective results (e.g. a guaranteed maximum THDu).

A harmonic audit is carried out by an engineer specialised in the disturbances affecting electrical distribution networks and equipped with powerful analysis and simulation equipment and software.

The steps in an audit are the following:

- Measurement of disturbances affecting current and phase-to-phase and phase-to-neutral voltages at the supply source, the disturbed outgoing circuits and the non-linear loads
- Computer modelling of the phenomena to obtain a precise explanation of the causes and determine the best solutions
- A complete audit report presenting:
  - The current levels of disturbances
  - The maximum permissible levels of disturbances (IEC 61000, IEC 34, etc.)
- A proposal containing solutions with guaranteed levels of performance
- Finally, implementation of the selected solution, using the necessary means and resources.

The entire audit process is certified ISO 9002.

8.4 Specific products

Passive filters

Passive filters are made up of coils and capacitors set up in resonant circuits tuned to the specific harmonic order that must be eliminated.

A system may comprise a number of filters to eliminate several harmonic orders. Suitable for 400 V three-phase voltages, the power ratings can reach:
- 265 kvar / 470 A for harmonic order 5
- 145 kvar / 225 A for harmonic order 7
- 105 kvar / 145 A for harmonic order 11

Passive filters can be created for all voltage and current levels.

Active filters

- SineWave active harmonic conditioners
  - Suitable for 400 V three-phase voltages, they can deliver between 20 and 120 A per phase
  - SineWave covers all harmonic orders from 2 to 25. Conditioning can be total or target specific harmonic orders
  - Attenuation: THDi load / THDi upstream greater than 10 at rated capacity
  - Functions include power factor correction, conditioning of zero-sequence harmonics, diagnostics and maintenance system, parallel connection, remote control, Ibus/RS485 communication interface
- Accusine active filters
  - Suitable for 400 and 480 V three-phase voltages, they can filter between 50 and 30 A per phase
  - All harmonic orders up to 50 are filtered
  - Functions include power factor correction, parallel connection, instantaneous response to load variations

Hybrid filters

These filters combine the advantages of both a passive filter and the SineWave active harmonic conditioner in a single system.