Chapter N
Characteristics of particular sources and loads

Contents

1	**Protection of a LV generator set and the downstream circuits**	**N1**
	1.1 Generator protection	N1
	1.2 Downstream LV network protection	N5
	1.3 The monitoring functions	N5
	1.4 Generator Set parallel-connection	N10
2	**Uninterruptible Power Supply units (UPS)**	**N11**
	2.1 Availability and quality of electrical power	N11
	2.2 Types of static UPSs	N12
	2.3 Batteries	N15
	2.4 System earthing arrangements for installations comprising UPSs	N16
	2.5 Choice of protection schemes	N18
	2.6 Installation, connection and sizing of cables	N20
	2.7 The UPSs and their environment	N22
	2.8 Complementary equipment	N22
3	**Protection of LV/LV transformers**	**N24**
	3.1 Transformer-energizing inrush current	N24
	3.2 Protection for the supply circuit of a LV/LV transformer	N24
	3.3 Typical electrical characteristics of LV/LV 50 Hz transformers	N25
	3.4 Protection of LV/LV transformers, using Merlin Gerin circuit-breakers	N25
4	**Lighting circuits**	**N27**
	4.1 The different lamp technologies	N27
	4.2 Electrical characteristics of lamps	N29
	4.3 Constraints related to lighting devices and recommendations	N34
	4.4 Lighting of public areas	N40
5	**Asynchronous motors**	**N42**
	5.1 Functions for the motor circuit	N42
	5.2 Standards	N44
	5.3 Applications	N45
	5.4 Maximum rating of motors installed for consumers supplied at LV	N49
	5.5 Reactive-energy compensation (power-factor correction)	N49

1 Protection of a LV generator set and the downstream circuits

Most industrial and large commercial electrical installations include certain important loads for which a power supply must be maintained, in the event that the utility electrical supply fails:

- Either, because safety systems are involved (emergency lighting, automatic fire-protection equipment, smoke dispersal fans, alarms and signalization, and so on…) or
- Because it concerns priority circuits, such as certain equipment, the stoppage of which would entail a loss of production, or the destruction of a machine tool, etc.

One of the current means of maintaining a supply to the so-called “priority” loads, in the event that other sources fail, is to install a diesel generator set connected, via a change-over switch, to an emergency-power standby switchboard, from which the priority services are fed (see **Fig. N1**).

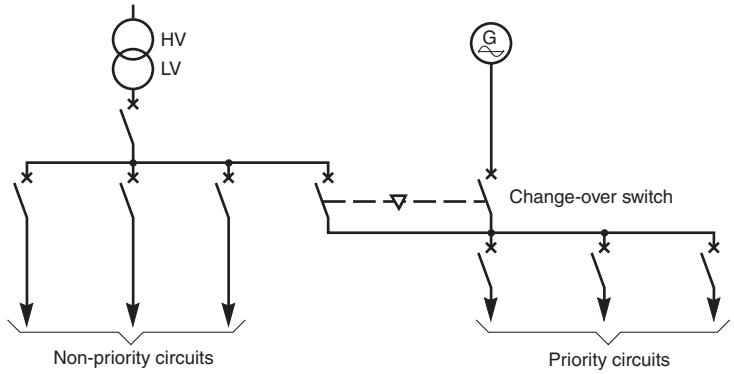

Fig N1 : Example of circuits supplied from a transformer or from an alternator

1.1 Generator protection

Figure N2 below shows the electrical sizing parameters of a Generator Set. Pn, Un and In are, respectively, the power of the thermal motor, the rated voltage and the rated current of the generator.

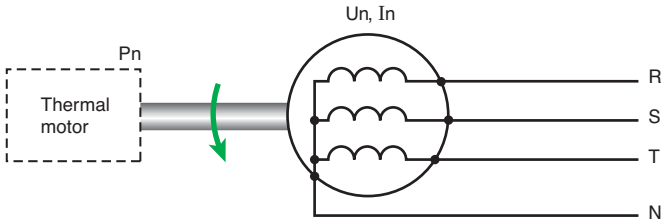

Fig N2 : Block diagram of a generator set

Overload protection

The generator protection curve must be analysed (see **Fig. N3**).
Standards and requirements of applications can also stipulate specific overload conditions. For example:

I/In	t
1.1	> 1 h
1.5	30 s

The setting possibilities of the overload protection devices (or Long Time Delay) will closely follow these requirements.

Note on overloads

- For economic reasons, the thermal motor of a replacement set may be strictly sized for its nominal power. If there is an active power overload, the diesel motor will stall. The active power balance of the priority loads must take this into account
- A production set must be able to withstand operating overloads:
  - One hour overload
  - One hour 10% overload every 12 hours (Prime Power)

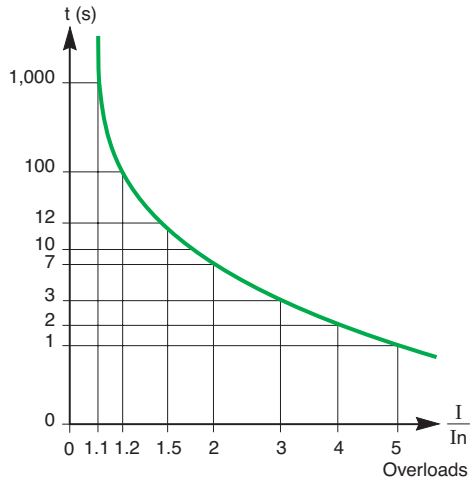

Fig N3 : Example of an overload curve t = f(I/In)

1 Protection of a LV generator set and the downstream circuits

Short-circuit current protection

Making the short-circuit current

The short-circuit current is the sum:

- Of an aperiodic current
- Of a damped sinusoidal current

The short-circuit current equation shows that it is composed of three successive phases (see **Fig. N4**).

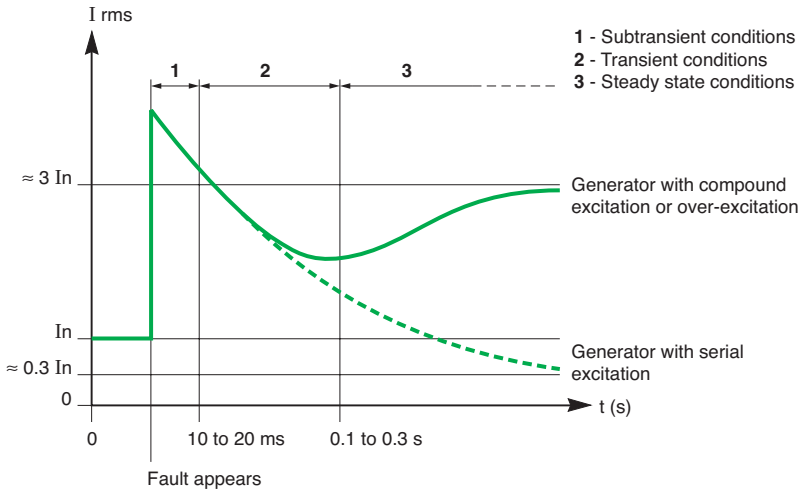

Fig N4 : Short-circuit current level during the 3 phases

- Subtransient phase

When a short-circuit appears at the terminals of a generator, the current is first made at a relatively high value of around 6 to 12 In during the first cycle (0 to 20 ms).
The amplitude of the short-circuit output current is defined by three parameters:

- The subtransient reactance of the generator
- The level of excitation prior to the time of the fault and
- The impedance of the faulty circuit.

The short-circuit impedance of the generator to be considered is the subtransient reactance x"d expressed in % by the manufacturer. The typical value is 10 to 15%.
We determine the subtransient short-circuit impedance of the generator:

$$X''d(\text{ohms}) = \frac{U_n^2 x''d}{100\ S} \text{ where } S = \sqrt{3}\ Un\ In$$

- Transient phase

The transient phase is placed 100 to 500 ms after the time of the fault. Starting from the value of the fault current of the subtransient period, the current drops to 1.5 to 2 times the current In.

The short-circuit impedance to be considered for this period is the transient reactance x'd expressed in % by the manufacturer. The typical value is 20 to 30%.

- Steady state phase

The steady state occurs after 500 ms.
When the fault persists, the output voltage collapses and the exciter regulation seeks to raise this output voltage. The result is a stabilised sustained short-circuit current:

- If generator excitation does not increase during a short-circuit (no field overexcitation) but is maintained at the level preceding the fault, the current stabilises at a value that is given by the synchronous reactance Xd of the generator. The typical value of xd is greater than 200%. Consequently, the final current will be less than the full-load current of the generator, normally around 0.5 In.
- If the generator is equipped with maximum field excitation (field overriding) or with compound excitation, the excitation "surge" voltage will cause the fault current to increase for 10 seconds, normally to 2 to 3 times the full-load current of the generator.

1 Protection of a LV generator set and the downstream circuits

Calculating the short-circuit current

Manufacturers normally specify the impedance values and time constants required for analysis of operation in transient or steady state conditions (see **Fig. N5**).

(kVA)	75	200	400	800	1,600	2,500
x"d	10.5	10.4	12.9	10.5	18.8	19.1
x'd	21	15.6	19.4	18	33.8	30.2
xd	280	291	358	280	404	292

Fig N5 : Example of impedance table (in %)

Resistances are always negligible compared with reactances. The parameters for the short-circuit current study are:

- Value of the short-circuit current at generator terminals

Short-circuit current amplitude in transient conditions is:

$$Isc3 = \frac{In}{X'd}\frac{1}{\sqrt{3}}$$ (X'd in ohms)

or

$$Isc3 = \frac{In}{x'd}\,100$$ (x'd in%)

Un is the generator phase-to-phase output voltage.

Note: This value can be compared with the short-circuit current at the terminals of a transformer. Thus, for the same power, currents in event of a short-circuit close to a generator will be 5 to 6 times weaker than those that may occur with a transformer (main source).

This difference is accentuated still further by the fact that generator set power is normally less than that of the transformer (see **Fig. N6**).

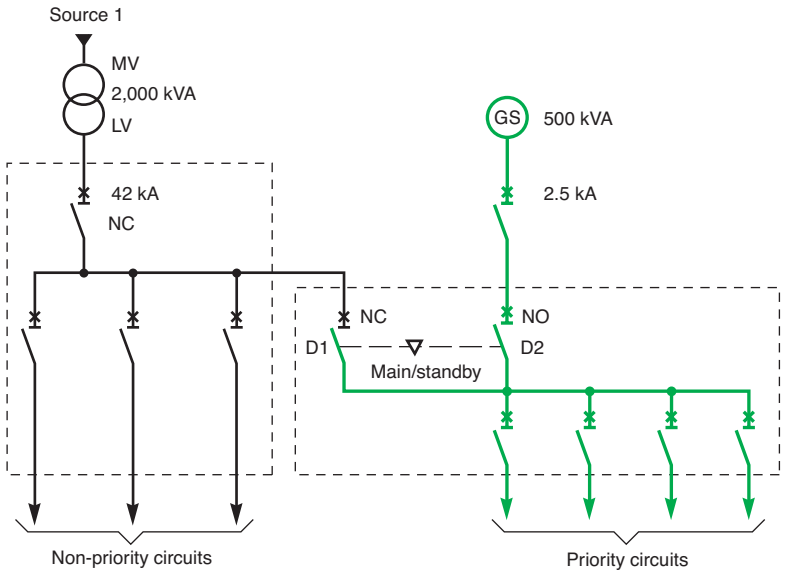

NC: Normally closed
NO: Normally open

Fig N6 : Example of a priority services switchboard supplied (in an emergency) from a standby generator set

When the LV network is supplied by the Main source 1 of 2,000 kVA, the short-circuit current is 42 kA at the main LV board busbar. When the LV network is supplied by the Replacement Source 2 of 500 kVA with transient reactance of 30%, the short-circuit current is made at approx. 2.5 kA, i.e. at a value 16 times weaker than with the Main source.

1 Protection of a LV generator set and the downstream circuits

1.2 Downstream LV network protection

Priority circuit protection

Choice of breaking capacity

This must be systematically checked with the characteristics of the main source (MV/LV transformer).

Setting of the Short Time Delay (STD) tripping current

■ Subdistribution boards

The ratings of the protection devices for the subdistribution and final distribution circuits are always lower than the generator rated current. Consequently, except in special cases, conditions are the same as with transformer supply.

■ Main LV switchboard

□ The sizing of the main feeder protection devices is normally similar to that of the generator set. Setting of the STD must allow for the short-circuit characteristic of the generator set (see “Short-circuit current protection” before)

□ Discrimination of protection devices on the priority feeders must be provided in generator set operation (it can even be compulsory for safety feeders). It is necessary to check proper staggering of STD setting of the protection devices of the main feeders with that of the subdistribution protection devices downstream (normally set for distribution circuits at 10 In).

Note: When operating on the generator set, use of a low sensitivity Residual Current Device enables management of the insulation fault and ensures very simple discrimination.

Safety of people

In the IT (2nd fault) and TN grounding systems, protection of people against indirect contacts is provided by the STD protection of circuit-breakers. Their operation on a fault must be ensured, whether the installation is supplied by the main source (Transformer) or by the replacement source (generator set).

Calculating the insulation fault current

Zero-sequence reactance formulated as a% of Uo by the manufacturer x’o.
The typical value is 8%.
The phase-to-neutral single-phase short-circuit current is given by:

$$If = \frac{Un\sqrt{3}}{2\,X'd + X'o}$$

The insulation fault current in the TN system is slightly greater than the three phase fault current. For example, in event of an insulation fault on the system in the previous example, the insulation fault current is equal to 3 kA.

1.3 The monitoring functions

Due to the specific characteristics of the generator and its regulation, the proper operating parameters of the generator set must be monitored when special loads are implemented.

The behaviour of the generator is different from that of the transformer:

■ The active power it supplies is optimised for a power factor = 0.8

■ At less than power factor 0.8, the generator may, by increased excitation, supply part of the reactive power

Capacitor bank

An off-load generator connected to a capacitor bank may self-excite, consequently increasing its overvoltage.

The capacitor banks used for power factor regulation must therefore be disconnected. This operation can be performed by sending the stopping setpoint to the regulator (if it is connected to the system managing the source switchings) or by opening the circuit-breaker supplying the capacitors.

If capacitors continue to be necessary, do not use regulation of the power factor relay in this case (incorrect and over-slow setting).

Motor restart and re-acceleration

A generator can supply at most in transient period a current of between 3 and 5 times its nominal current.
A motor absorbs roughly 6 In for 2 to 20 s during start-up.

1 Protection of a LV generator set and the downstream circuits

If the sum of the motor power is high, simultaneous start-up of loads generates a high pick-up current that can be damaging. A large voltage drop, due to the high value of the generator transient and subtransient reactances will occur (20% to 30%), with a risk of:

- Non-starting of motors
- Temperature rise linked to the prolonged starting time due to the voltage drop
- Tripping of the thermal protection devices

Moreover, all the network and actuators are disturbed by the voltage drop.

Application (see **Fig. N7**)

A generator supplies a set of motors.
Generator characteristics: Pn = 130 kVA at a power factor of 0.8,
In = 150 A
x'd = 20% (for example) hence Isc = 750 A.

- The Σ Pmotors is 45 kW (45% of generator power)

Calculating voltage drop at start-up:
Σ PMotors = 45 kW, Im = 81 A, hence a starting current Id = 480 A for 2 to 20 s.
Voltage drop on the busbar for simultaneous motor starting:

$$\frac{\Delta U}{U} = \left(\frac{Id - In}{Isc - In} \right) \text{ in \%}$$

ΔU = 55%
which is not tolerable for motors (failure to start).

- the Σ Pmotors is 20 kW (20% of generator power)

Calculating voltage drop at start-up:
Σ PMotors = 20 kW, Im = 35 A, hence a starting current Id = 210 A for 2 to 20 s.
Voltage drop on the busbar:

$$\frac{\Delta U}{U} = \left(\frac{Id - In}{Isc - In} \right) \text{ in \%}$$

ΔU = 10%
which is high but tolerable (depending on the type of loads).

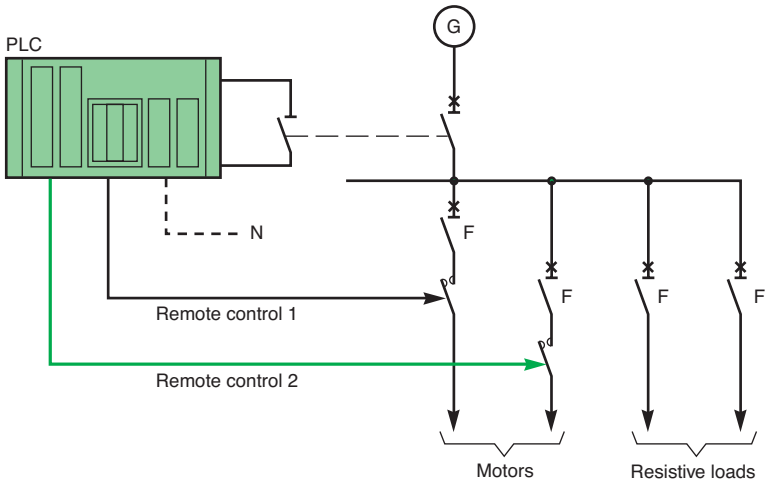

Fig N7 : Restarting of priority motors (ΣP > 1/3 Pn)

Restarting tips

- If the Pmax of the largest motor > $\frac{1}{3}$Pn , a soft starter must be installed on this motor
- If Σ Pmotors > $\frac{1}{3}$Pn , motor cascade restarting must be managed by a PLC
- If Σ Pmotors < $\frac{1}{3}$Pn , there are no restarting problems

1 Protection of a LV generator set and the downstream circuits

Non-linear loads – Example of a UPS

Non-linear loads

These are mainly:

- Saturated magnetic circuits
- Discharge lamps, fluorescent lights
- Electronic converters
- Information Technology Equipment: PC, computers, etc.

These loads generate harmonic currents: supplied by a Generator Set, this can create high voltage distortion due to the low short-circuit power of the generator.

Uninterruptible Power Supply (UPS) (see **Fig. N8**)

The combination of a UPS and generator set is the best solution for ensuring quality power supply with long autonomy for the supply of sensitive loads.

It is also a non-linear load due to the input rectifier. On source switching, the autonomy of the UPS on battery must allow starting and connection of the Generator Set.

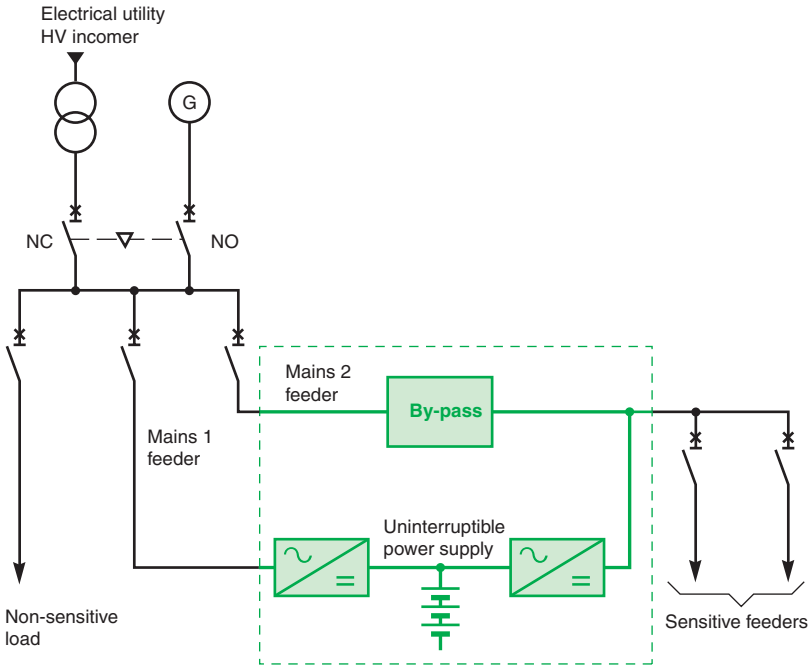

Fig N8 : Generator set- UPS combination for Quality energy

UPS power

UPS inrush power must allow for:

- Nominal power of the downstream loads. This is the sum of the apparent powers Pa absorbed by each application. Furthermore, so as not to oversize the installation, the overload capacities at UPS level must be considered (for example: 1.5 In for 1 minute and 1.25 In for 10 minutes)
- The power required to recharge the battery: This current is proportional to the autonomy required for a given power. The sizing Sr of a UPS is given by:

Sr = 1.17 x Pn

Figure N9 next page defines the pick-up currents and protection devices for supplying the rectifier (Mains 1) and the standby mains (Mains 2).

1 Protection of a LV generator set and the downstream circuits

Nominal power Pn (kVA)	Current value (A)	
	Mains 1 with 3Ph battery 400 V - I1	Mains 2 or 3Ph application 400 V - Iu
40	86	60.5
60	123	91
80	158	121
100	198	151
120	240	182
160	317	243
200	395	304
250	493	360
300	590	456
400	793	608
500	990	760
600	1,180	912
800	1,648	1,215

Fig N9 : Pick-up current for supplying the rectifier and standby mains

Generator Set/UPS combination

■ Restarting the Rectifier on a Generator Set

The UPS rectifier can be equipped with a progressive starting of the charger to prevent harmful pick-up currents when installation supply switches to the Generator Set (see **Fig. N10**).

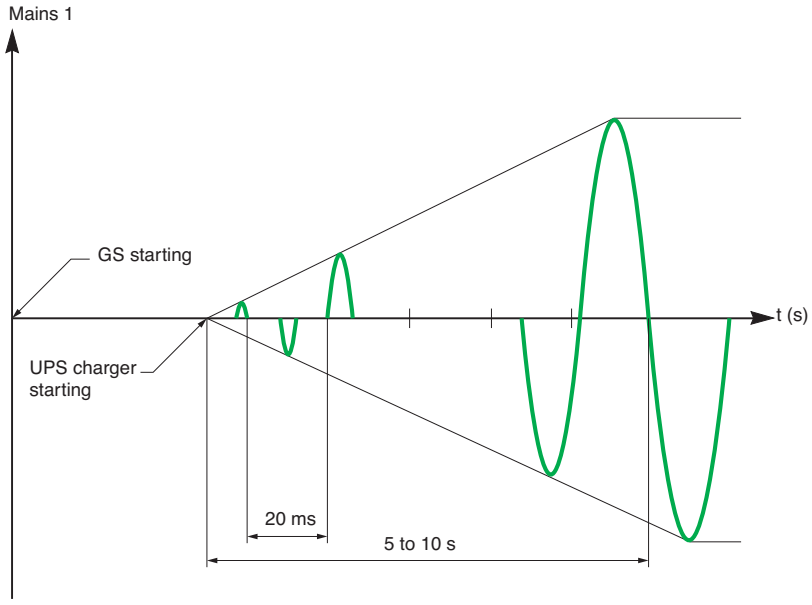

Fig N10 : Progressive starting of a type 2 UPS rectifier

■ Harmonics and voltage distortion

Total voltage distortion τ is defined by:

$$\tau(\%) = \frac{\sqrt{\Sigma U_h^2}}{U_1}$$

where Uh is the harmonic voltage of order h.

This value depends on:

□ The harmonic currents generated by the rectifier (proportional to the power Sr of the rectifier)

□ The longitudinal subtransient reactance X"d of the generator

□ The power Sg of the generator

We define $U'Rcc(\%) = X''d\frac{Sr}{Sg}$ the generator relative short-circuit voltage, brought to rectifier power, i.e. t = f(U'Rcc).

1 Protection of a LV generator set and the downstream circuits

Note 1: As subtransient reactance is great, harmonic distortion is normally too high compared with the tolerated value (7 to 8%) for reasonable economic sizing of the generator: use of a suitable filter is an appropriate and cost-effective solution.
Note 2: Harmonic distortion is not harmful for the rectifier but may be harmful for the other loads supplied in parallel with the rectifier.

Application
A chart is used to find the distortion τ as a function of U'Rcc (see **Fig. N11**).

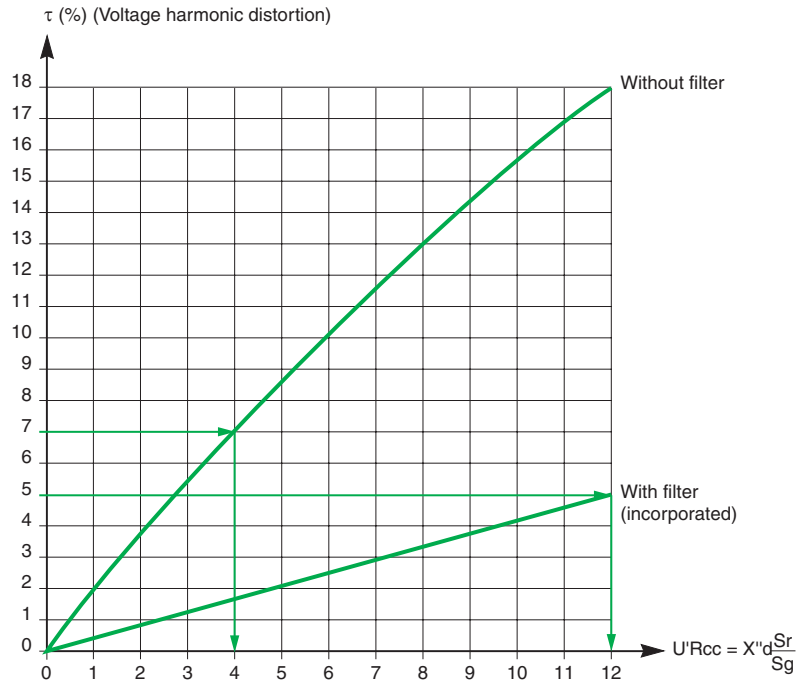

Fig N11 : Chart for calculating harmonic distorsion

The chart gives:
- Either τ as a function of U'Rcc
- Or U'Rcc as a function of τ

From which generator set sizing, Sg, is determined.

Example: Generator sizing
- 300 kVA UPS without filter, subtransient reactance of 15%

The power Sr of the rectifier is Sr = 1.17 x 300 kVA = 351 kVA
For a τ < 7%, the chart gives U'Rcc = 4%, power Sg is:

$$Sg = 351 \times \frac{15}{4} \approx 1{,}400 \text{ kVA}$$

- 300 kVA UPS with filter, subtransient reactance of 15%

For τ = 5%, the calculation gives U'Rcc = 12%, power Sg is:

$$Sg = 351 \times \frac{15}{12} \approx 500 \text{ kVA}$$

Note: With an upstream transformer of 630 kVA on the 300 kVA UPS without filter, the 5% ratio would be obtained.

The result is that operation on generator set must be continually monitored for harmonic currents.

If voltage harmonic distortion is too great, use of a filter on the network is the most effective solution to bring it back to values that can be tolerated by sensitive loads.

1 Protection of a LV generator set and the downstream circuits

1.4 Generator Set parallel-connection

Parallel-connection of the generator set irrespective of the application type - Safety source, Replacement source or Production source - requires finer management of connection, i.e. additional monitoring functions.

Parallel operation

As generator sets generate energy in parallel on the same load, they must be synchronised properly (voltage, frequency) and load distribution must be balanced properly. This function is performed by the regulator of each Generator Set (thermal and excitation regulation). The parameters (frequency, voltage) are monitored before connection: if the values of these parameters are correct, connection can take place.

Insulation faults (see **Fig. N12**)

An insulation fault inside the metal casing of a generator set may seriously damage the generator of this set if the latter resembles a phase-to-neutral short-circuit. The fault must be detected and eliminated quickly, else the other generators will generate energy in the fault and trip on overload: installation continuity of supply will no longer be guaranteed. Ground Fault Protection (GFP) built into the generator circuit is used to:

- Quickly disconnect the faulty generator and preserve continuity of supply
- Act at the faulty generator control circuits to stop it and reduce the risk of damage

This GFP is of the “Residual Sensing” type and must be installed as close as possible to the protection device as per a TN-C/TN-S (1) system at each generator set with grounding of frames by a separate PE. This kind of protection is usually called “Restricted Earth Fault”.

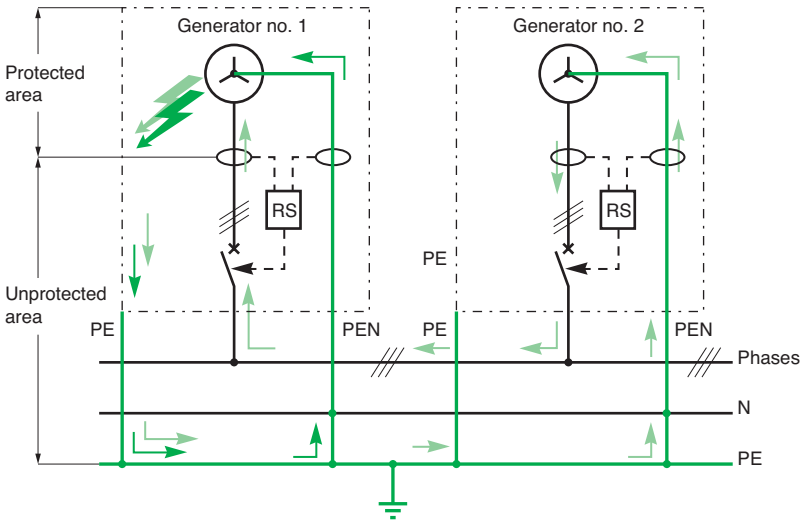

Fig N12 : Insulation fault inside a generator

Generator Set operating as a load (see **Fig. N13** and **Fig. N14**)

One of the parallel-connected generator sets may no longer operate as a generator but as a motor (by loss of its excitation for example). This may generate overloading of the other generator set(s) and thus place the electrical installation out of operation.

To check that the generator set really is supplying the installation with power (operation as a generator), the proper flow direction of energy on the coupling busbar must be checked using a specific “reverse power” check. Should a fault occur, i.e. the set operates as a motor, this function will eliminate the faulty set.

Grounding parallel-connected Generator Sets

Grounding of connected generator sets may lead to circulation of earth fault currents (triplen harmonics) by connection of neutrals for common grounding (grounding system of the TN or TT type). Consequently, to prevent these currents from flowing between the generator sets, we recommend the installation of a decoupling resistance in the grounding circuit.

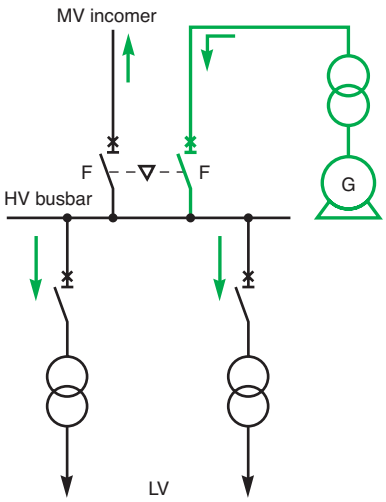

Fig N13 : Energy transfer direction – Generator Set as a generator

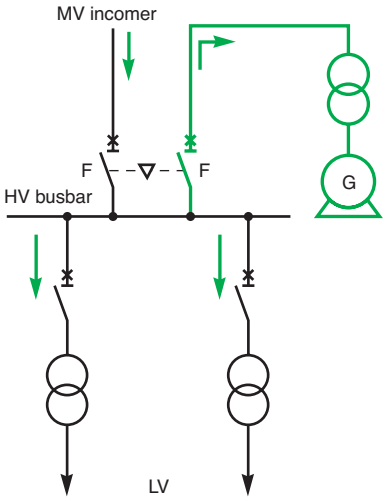

Fig N14 : Energy transfer direction – Generator Set as a load

(1) The system is in TN-C for sets seen as the “generator” and in TN-S for sets seen as “loads”

2 Uninterruptible Power Supply units (UPS)

2.1 Availability and quality of electrical power

The disturbances presented above may affect:
- Safety of human life
- Safety of property
- The economic viability of a company or production process

Disturbances must therefore be eliminated.

A number of technical solutions contribute to this goal, with varying degrees of effectiveness. These solutions may be compared on the basis of two criteria:
- Availability of the power supplied
- Quality of the power supplied

The availability of electrical power can be thought of as the time per year that power is present at the load terminals. Availability is mainly affected by power interruptions due to utility outages or electrical faults.

A number of solutions exist to limit the risk:
- Division of the installation so as to use a number of different sources rather than just one
- Subdivision of the installation into priority and non-priority circuits, where the supply of power to priority circuits can be picked up if necessary by another available source
- Load shedding, as required, so that a reduced available power rating can be used to supply standby power
- Selection of a system earthing arrangement suited to service-continuity goals, e.g. IT system
- Discrimination of protection devices (selective tripping) to limit the consequences of a fault to a part of the installation

Note that the only way of ensuring availability of power with respect to utility outages is to provide, in addition to the above measures, an autonomous alternate source, at least for priority loads (see **Fig. N15**).

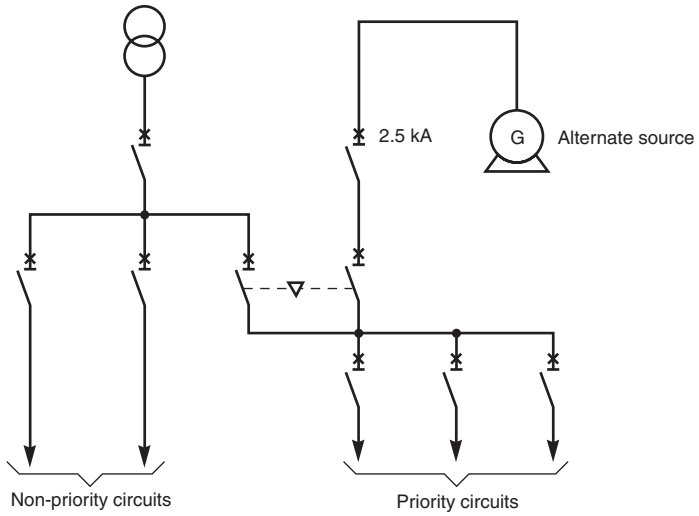

Fig. N15 : Availability of electrical power

This source takes over from the utility in the event of a problem, but two factors must be taken into account:
- The transfer time (time required to take over from the utility) which must be acceptable to the load
- The operating time during which it can supply the load

The quality of electrical power is determined by the elimination of the disturbances at the load terminals.

An alternate source is a means to ensure the availability of power at the load terminals, however, it does not guarantee, in many cases, the quality of the power supplied with respect to the above disturbances.

2 Uninterruptible Power Supply units (UPS)

Today, many sensitive electronic applications require an electrical power supply which is virtually free of these disturbances, to say nothing of outages, with tolerances that are stricter than those of the utility.

This is the case, for example, for computer centers, telephone exchanges and many industrial-process control and monitoring systems.

These applications require solutions that ensure both the availability and quality of electrical power.

The UPS solution

The solution for sensitive applications is to provide a power interface between the utility and the sensitive loads, providing voltage that is:

- Free of all disturbances present in utility power and in compliance with the strict tolerances required by loads
- Available in the event of a utility outage, within specified tolerances

UPSs (Uninterruptible Power Supplies) satisfy these requirements in terms of power availability and quality by:

- Supplying loads with voltage complying with strict tolerances, through use of an inverter
- Providing an autonomous alternate source, through use of a battery
- Stepping in to replace utility power with no transfer time, i.e. without any interruption in the supply of power to the load, through use of a static switch

These characteristics make UPSs the ideal power supply for all sensitive applications because they ensure power quality and availability, whatever the state of utility power.

A UPS comprises the following main components:

- Rectifier/charger, which produces DC power to charge a battery and supply an inverter
- Inverter, which produces quality electrical power, i.e.
  - Free of all utility-power disturbances, notably micro-outages
  - Within tolerances compatible with the requirements of sensitive electronic devices (e.g. for Galaxy, tolerances in amplitude ± 0.5% and frequency ± 1%, compared to ± 10% and ± 5% in utility power systems, which correspond to improvement factors of 20 and 5, respectively)
- Battery, which provides sufficient backup time (8 minutes to 1 hour or more) to ensure the safety of life and property by replacing the utility as required
- Static switch, a semi-conductor based device which transfers the load from the inverter to the utility and back, without any interruption in the supply of power

2.2 Types of static UPSs

Types of static UPSs are defined by standard IEC 62040.

The standard distinguishes three operating modes:

- Passive standby (also called off-line)
- Line interactive
- Double conversion (also called on-line)

These definitions concern UPS operation with respect to the power source including the distribution system upstream of the UPS.

Standard IEC 62040 defines the following terms:

- Primary power: power normally continuously available which is usually supplied by an electrical utility company, but sometimes by the user's own generation
- Standby power: power intended to replace the primary power in the event of primary-power failure
- Bypass power: power supplied via the bypass

Practically speaking, a UPS is equipped with two AC inputs, which are called the normal AC input and bypass AC input in this guide.

- The normal AC input, noted as mains input 1, is supplied by the primary power, i.e. by a cable connected to a feeder on the upstream utility or private distribution system
- The bypass AC input, noted as mains input 2, is generally supplied by standby power, i.e. by a cable connected to an upstream feeder other than the one supplying the normal AC input, backed up by an alternate source (e.g. by an engine-generator set or another UPS, etc.)

When standby power is not available, the bypass AC input is supplied with primary power (second cable parallel to the one connected to the normal AC input).

The bypass AC input is used to supply the bypass line(s) of the UPS, if they exist. Consequently, the bypass line(s) is supplied with primary or standby power, depending on the availability of a standby-power source.

2 Uninterruptible Power Supply units (UPS)

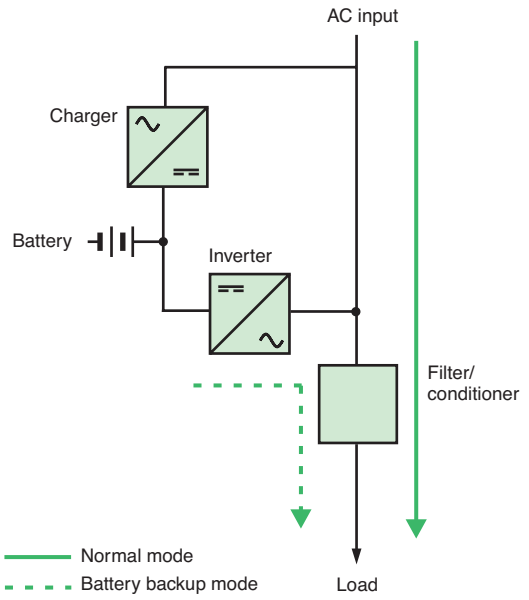

Fig. N16 : UPS operating in passive standby mode

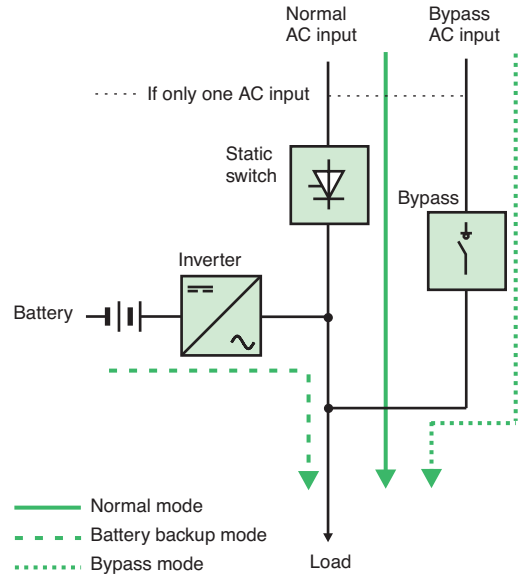

Fig. N17 : UPS operating in line-interactive mode

UPS operating in passive-standby (off-line) mode

Operating principle

The inverter is connected in parallel with the AC input in a standby (see **Fig. N16**).

■ Normal mode

The load is supplied by utility power via a filter which eliminates certain disturbances and provides some degree of voltage regulation (the standard speaks of “additional devices…to provide power conditioning”). The inverter operates in passive standby mode.

■ Battery backup mode

When the AC input voltage is outside specified tolerances for the UPS or the utility power fails, the inverter and the battery step in to ensure a continuous supply of power to the load following a very short (<10 ms) transfer time.

The UPS continues to operate on battery power until the end of battery backup time or the utility power returns to normal, which provokes transfer of the load back to the AC input (normal mode).

Usage

This configuration is in fact a compromise between an acceptable level of protection against disturbances and cost. It can be used only with low power ratings (< 2 kVA). It operates without a real static switch, so a certain time is required to transfer the load to the inverter. This time is acceptable for certain individual applications, but incompatible with the performance required by more sophisticated, sensitive systems (large computer centers, telephone exchanges, etc.).

What is more, the frequency is not regulated and there is no bypass.

Note: In normal mode, the power supplying the load does not flow through the inverter, which explains why this type of UPS is sometimes called “Off-line”. This term is misleading, however, because it also suggests “not supplied by utility power”, when in fact the load is supplied by the utility via the AC input during normal operation. That is why standard IEC 62040 recommends the term “passive standby”.

UPS operating in line-interactive mode

Operating principle

The inverter is connected in parallel with the AC input in a standby configuration, but also charges the battery. It thus interacts (reversible operation) with the AC input source (see **Fig. N17**).

■ Normal mode

The load is supplied with conditioned power via a parallel connection of the AC input and the inverter. The inverter operates to provide output-voltage conditioning and/or charge the battery. The output frequency depends on the AC-input frequency.

■ Battery backup mode

When the AC input voltage is outside specified tolerances for the UPS or the utility power fails, the inverter and the battery step in to ensure a continuous supply of power to the load following a transfer without interruption using a static switch which also disconnects the AC input to prevent power from the inverter from flowing upstream.

The UPS continues to operate on battery power until the end of battery backup time or the utility power returns to normal, which provokes transfer of the load back to the AC input (normal mode).

■ Bypass mode

This type of UPS may be equipped with a bypass. If one of the UPS functions fails, the load can be transferred to the bypass AC input (supplied with utility or standby power, depending on the installation).

Usage

This configuration is not well suited to regulation of sensitive loads in the medium to high-power range because frequency regulation is not possible.

For this reason, it is rarely used other than for low power ratings.

UPS operating in double-conversion (on-line) mode

Operating principle

The inverter is connected in series between the AC input and the application.

■ Normal mode

During normal operation, all the power supplied to the load passes through the rectifier/charger and inverter which together perform a double conversion (AC-DC-AC), hence the name.

■ Battery backup mode

When the AC input voltage is outside specified tolerances for the UPS or the utility power fails, the inverter and the battery step in to ensure a continuous supply of power to the load following a transfer without interruption using a static switch.

The UPS continues to operate on battery power until the end of battery backup time or utility power returns to normal, which provokes transfer of the load back to the AC input (normal mode).

2 Uninterruptible Power Supply units (UPS)

■ Bypass mode

This type of UPS is generally equipped with a static bypass, sometimes referred to as a static switch (see **Fig. N18**).

The load can be transferred without interruption to the bypass AC input (supplied with utility or standby power, depending on the installation), in the event of the following:

- □ UPS failure
- □ Load-current transients (inrush or fault currents)
- □ Load peaks

However, the presence of a bypass assumes that the input and output frequencies are identical and if the voltage levels are not the same, a bypass transformer is required.

For certain loads, the UPS must be synchronized with the bypass power to ensure load-supply continuity. What is more, when the UPS is in bypass mode, a disturbance on the AC input source may be transmitted directly to the load because the inverter no longer steps in.

Note: Another bypass line, often called the maintenance bypass, is available for maintenance purposes. It is closed by a manual switch.

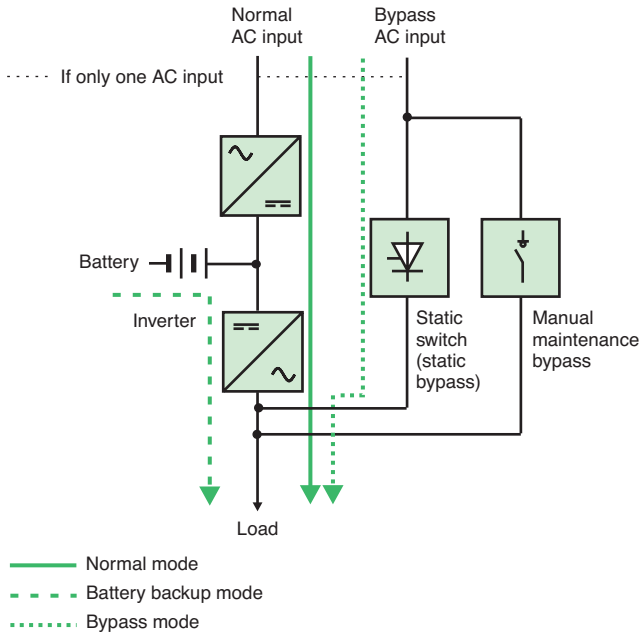

***Fig. N18** : UPS operating in double-conversion (on-line) mode*

Usage

In this configuration, the time required to transfer the load to the inverter is negligible due to the static switch.

Also, the output voltage and frequency do not depend on the input voltage and frequency conditions. This means that the UPS, when designed for this purpose, can operate as a frequency converter.

Practically speaking, this is the main configuration used for medium and high power ratings (from 10 kVA upwards).The rest of this chapter will consider only this configuration.

Note: This type of UPS is often called “on-line”, meaning that the load is continuously supplied by the inverter, regardless of the conditions on the AC input source. This term is misleading, however, because it also suggests “supplied by utility power”, when in fact the load is supplied by power that has been reconstituted by the double-conversion system. That is why standard IEC 62040 recommends the term “double conversion”.

2 Uninterruptible Power Supply units (UPS)

2.3 Batteries

Selection of battery type

A battery is made up of interconnected cells which may be vented or of the recombination type.

There are two main families of batteries:

- Nickel-cadmium batteries
- Lead-acid batteries
- Vented cells (lead-antimony): They are equipped with ports to
  - Release to the atmosphere the oxygen and hydrogen produced during the different chemical reactions
  - Top off the electrolyte by adding distilled or demineralized water
- Recombination cells (lead, pure lead, lead-tin batteries): The gas recombination rate is at least 95% and they therefore do not require water to be added during service life

By extension, reference will be made to vented or recombination batteries (recombination batteries are also often called “sealed” batteries).

The main types of batteries used in conjunction with UPSs are:

- Sealed lead-acid batteries, used 95% of the time because they are easy to maintain and do not require a special room
- Vented lead-acid batteries
- Vented nickel-cadmium batteries

The above three types of batteries may be proposed, depending on economic factors and the operating requirements of the installation, with all the available service-life durations.

Capacity levels and backup times may be adapted to suit the user’s needs.
The proposed batteries are also perfectly suited to UPS applications in that they are the result of collaboration with leading battery manufacturers.

Selection of back up time

Selection depends on:

- The average duration of power-system failures
- Any available long-lasting standby power (engine-generator set, etc.)
- The type of application

The typical range generally proposed is:

- Standard backup times of 10, 15 or 30 minutes
- Custom backup times

The following general rules apply:

- Computer applications

Battery backup time must be sufficient to cover file-saving and system-shutdown procedures required to ensure a controlled shutdown of the computer system. Generally speaking, the computer department determines the necessary backup time, depending on its specific requirements.

- Industrial processes

The backup time calculation should take into account the economic cost incurred by an interruption in the process and the time required to restart.

Selection table

Figure N19 next page sums up the main characteristics of the various types of batteries.
Increasingly, recombination batteries would seem to be the market choice for the following reasons:

- No maintenance
- Easy implementation
- Installation in all types of rooms (computer rooms, technical rooms not specifically intended for batteries, etc.)

In certain cases, however, vented batteries are preferred, notably for:

- Long service life
- Long backup times
- High power ratings

Vented batteries must be installed in special rooms complying with precise regulations and require appropriate maintenance.

2 Uninterruptible Power Supply units (UPS)

	Service life	Compact	Operating-temperature tolerances	Frequency of maintenance	Special room	Cost
Sealed lead-acid	5 or 10 years	+	+	Low	No	Low medium
Vented lead-acid	5 or 10 years	+	++	Medium	Yes	Low
Nickel-cadmium	5 or 10 years	++	+++	High	no	High

Fig. N19 : Main characteristics of the various types of batteries

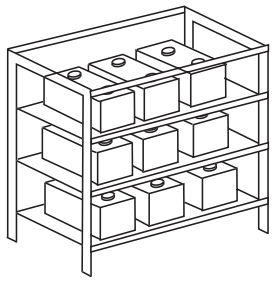

Fig. N20 : Shelf mounting

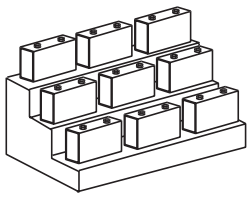

Fig. N21 : Tier mounting

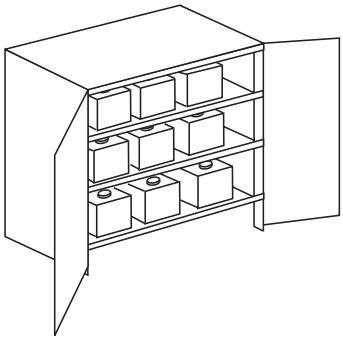

Fig. N22 : Cabinet mounting

Installation methods

Depending on the UPS range, the battery capacity and backup time, the battery is:
- Sealed type and housed in the UPS cabinet
- Sealed type and housed in one to three cabinets
- Vented or sealed type and rack-mounted. In this case the installation method may be
  - On shelves (see **Fig. N20**)

This installation method is possible for sealed batteries or maintenance-free vented batteries which do not require topping up of their electrolyte.
  - Tier mounting (see **Fig. N21**)

This installation method is suitable for all types of batteries and for vented batteries in particular, as level checking and filling are made easy.
  - In cabinets (see **Fig. N22**)

This installation method is suitable for sealed batteries. It is easy to implement and offers maximum safety.

2.4 System earthing arrangements for installations comprising UPSs

Application of protection systems, stipulated by the standards, in installations comprising a UPS, requires a number of precautions for the following reasons:
- The UPS plays two roles
  - A load for the upstream system
  - A power source for downstream system
- When the battery is not installed in a cabinet, an insulation fault on the DC system can lead to the flow of a residual DC component

This component can disturb the operation of certain protection devices, notably RCDs used for the protection of persons.

Protection against direct contact (see **Fig. N23**)

All installations satisfy the applicable requirements because the equipment is housed in cabinets providing a degree of protection IP 20. This is true even for the battery when it is housed in a cabinet.
When batteries are not installed in a cabinet, i.e. generally in a special room, the measures presented at the end of this chapter should be implemented.

Note: The TN system (version TN-S or TN-C) is the most commonly recommended system for the supply of computer systems.

Type of arrangement	IT system	TT system	TN system
Operation	■ Signaling of first insulation fault ■ Locating and elimination of first fault ■ Disconnection for second insulation fault	■ Disconnection for first insulation fault	■ Disconnection for first insulation fault
Techniques for protection of persons	■ Interconnection and earthing of conductive parts ■ Surveillance of first fault using an insulation monitoring device (IMD) ■ Second fault results in circuit interruption (circuit-breaker or fuse)	■ Earthing of conductive parts combined with use of RCDs ■ First insulation fault results in interruption by detecting leakage currents	■ Interconnection and earthing of conductive parts and neutral imperative ■ First insulation fault results in interruption by detecting overcurrents (circuit-breaker or fuse)
Advantages and disadvantages	■ Solution offering the best continuity of service (first fault is signalled) ■ Requires competent surveillance personnel (location of first fault)	■ Easiest solution in terms of design and installation ■ No insulation monitoring device (IMD) required ■ However, each fault results in interruption of the concerned circuit	■ Low-cost solution in terms of installation ■ Difficult design (calculation of loop impedances) ■ Qualified operating personnel required ■ Flow of high fault currents

Fig. N23 : Main characteristics of system earthing arrangements

2 Uninterruptible Power Supply units (UPS)

Essential points to be checked for UPSs

Figure N24 shows all the essential points that must be interconnected as well as the devices to be installed (transformers, RCDs, etc.) to ensure installation conformity with safety standards.

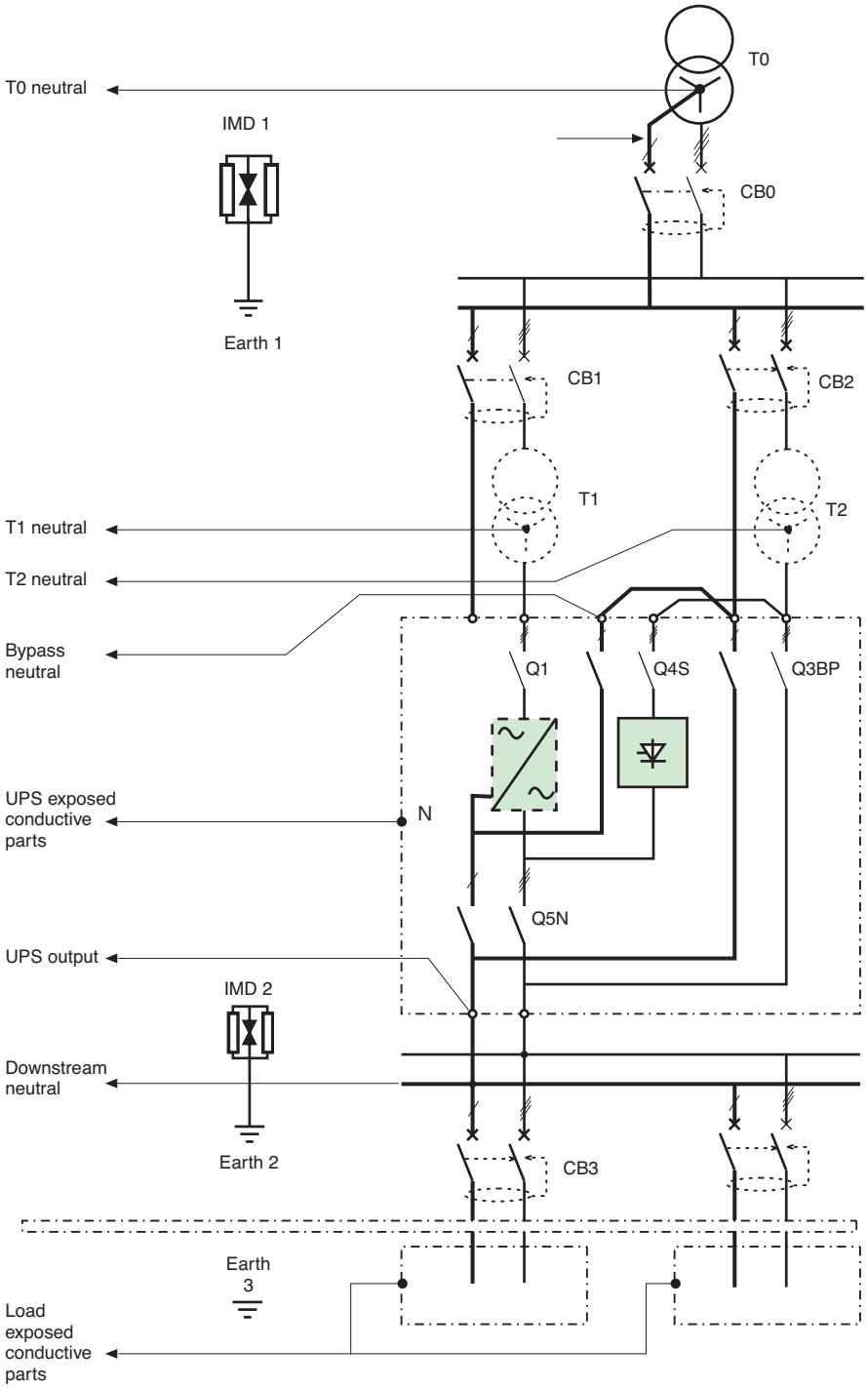

Fig. N24 : The essential points that must be connected in system earthing arrangements

2 Uninterruptible Power Supply units (UPS)

2.5 Choice of protection schemes

The circuit-breakers have a major role in an installation but their importance often appears at the time of accidental events which are not frequent. The best sizing of UPS and the best choice of configuration can be compromised by a wrong choice of only one circuit-breaker.

Circuit-breaker selection

Figure N25 shows how to select the circuit-breakers.

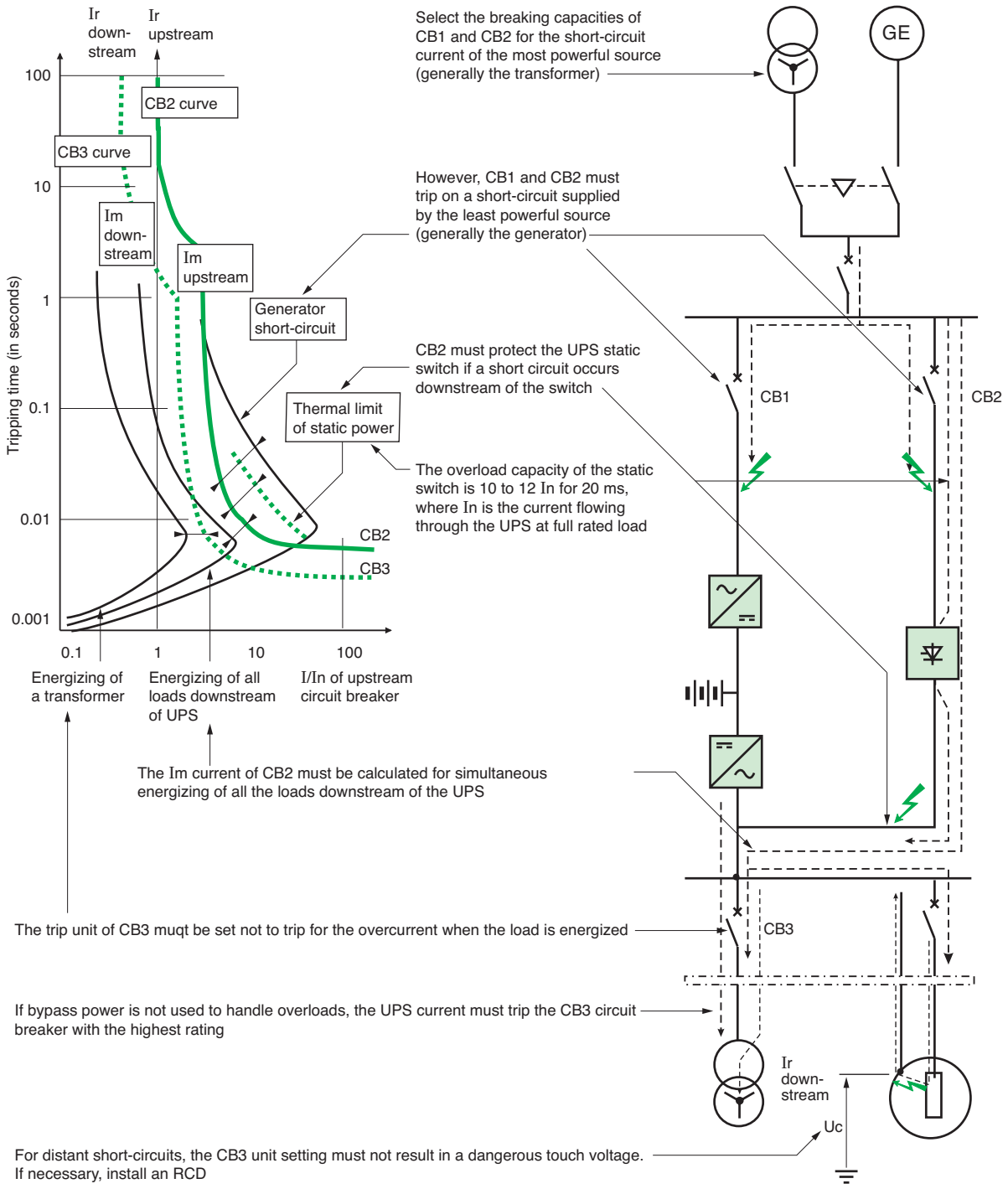

Fig. N25 : Circuit-breakers are submitted to a variety of situations

2 Uninterruptible Power Supply units (UPS)

Rating

The selected rating (rated current) for the circuit-breaker must be the one just above the rated current of the protected downstream cable.

Breaking capacity

The breaking capacity must be selected just above the short-circuit current that can occur at the point of installation.

Ir and Im thresholds

The table below indicates how to determine the Ir (overload ; thermal or longtime) and Im (short-circuit ; magnetic or short time) thresholds to ensure discrimination, depending on the upstream and downstream trip units.

Remark (see **Fig. N26**)

- Time discrimination must be implemented by qualified personnel because time delays before tripping increase the thermal stress (I^2t) downstream (cables, semi-conductors, etc.). Caution is required if tripping of CB2 is delayed using the Im threshold time delay
- Energy discrimination does not depend on the trip unit, only on the circuit-breaker

Type of downstream circuit	Ir upstream / Ir downstream ratio	Im upstream / Im downstream ratio	Im upstream / Im downstream ratio
Downstream trip unit	All types	Magnetic	Electronic
Distribution	> 1.6	>2	>1.5
Asynchronous motor	>3	>2	>1.5

Fig. N26 : Ir and Im thresholds depending on the upstream and downstream trip units

Special case of generator short-circuits

Figure N27 shows the reaction of a generator to a short-circuit.

To avoid any uncertainty concerning the type of excitation, we will trip at the first peak (3 to 5 In as per X"d) using the Im protection setting without a time delay.

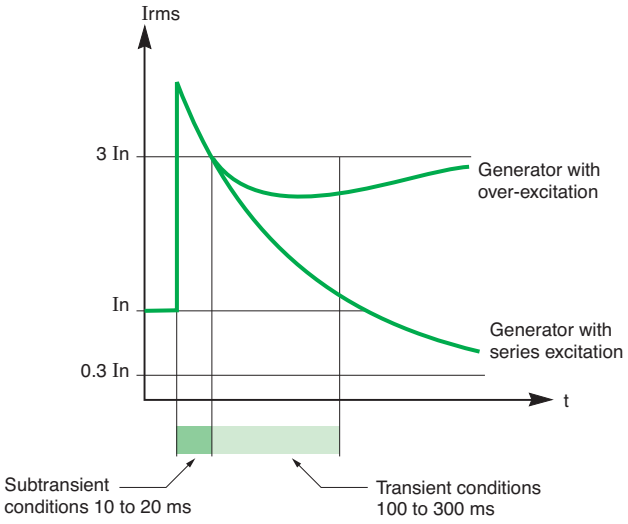

Fig. N27 : Generator during short-circuit

2 Uninterruptible Power Supply units (UPS)

2.6 Installation, connection and sizing of cables

Ready-to-use UPS units

The low power UPSs, for micro computer systems for example, are compact ready-to-use equipement. The internal wiring is built in the factory and adapted to the characteristics of the devices.

Not ready-to-use UPS units

For the other UPSs, the wire connections to the power supply system, to the battery and to the load are not included.
Wiring connections depend on the current level as indicated in **Figure N28** below.

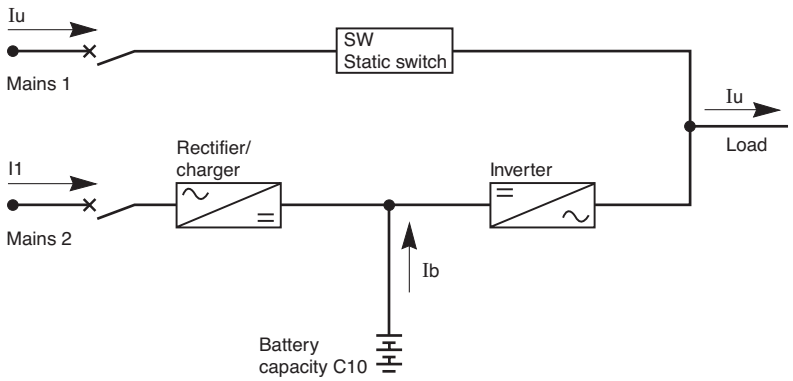

Fig.N28 : Current to be taken into account for the selection of the wire connections

Calculation of currents I1, Iu

- The input current Iu from the power network is the load current
- The input current I1 of the charger/rectifier depends on:
  - The capacity of the battery (C10) and the charging mode (Ib)
  - The characteristics of the charger
  - The efficiency of the inverter
- The current Ib is the current in the connection of the battery

These currents are given by the manufacturers.

Cable temperature rise and voltage drops

The cross section of cables depends on:

- Permissible temperature rise
- Permissible voltage drop

For a given load, each of these parameters results in a minimum permissible cross section. The larger of the two must be used.
When routing cables, care must be taken to maintain the required distances between control circuits and power circuits, to avoid any disturbances caused by HF currents.

Temperature rise

Permissible temperature rise in cables is limited by the withstand capacity of cable insulation.

Temperature rise in cables depends on:

- The type of core (Cu or Al)
- The installation method
- The number of touching cables

Standards stipulate, for each type of cable, the maximum permissible current.

Voltage drops

The maximum permissible voltage drops are:

- 3% for AC circuits (50 or 60 Hz)
- 1% for DC circuits

2 Uninterruptible Power Supply units (UPS)

Selection tables

Figure N29 indicates the voltage drop in percent for a circuit made up of 100 meters of cable. To calculate the voltage drop in a circuit with a length L, multiply the value in the table by L/100.

- Sph: Cross section of conductors
- I_n: Rated current of protection devices on circuit

Three-phase circuit

If the voltage drop exceeds 3% (50-60 Hz), increase the cross section of conductors.

DC circuit

If the voltage drop exceeds 1%, increase the cross section of conductors.

a - Three-phase circuits (copper conductors)
50-60 Hz - 380 V / 400 V / 415 V three-phase, cos φ = 0.8, balanced system three-phase + N

In	Sph (mN²)											
(A)	10	16	25	35	50	70	95	120	150	185	240	300
10	0.9											
15	1.2											
20	1.6	1.1										
25	2.0	1.3	0.9									
32	2.6	1.7	1.1									
40	3.3	2.1	1.4	1.0								
50	4.1	2.6	1.7	1.3	1.0							
63	5.1	3.3	2.2	1.6	1.2	0.9						
70	5.7	3.7	2.4	1.7	1.3	1.0	0.8					
80	6.5	4.2	2.7	2.1	1.5	1.2	0.9	0.7				
100	8.2	5.3	3.4	2.6	2.0	2.0	1.1	0.9	0.8			
125		6.6	4.3	3.2	2.4	2.4	1.4	1.1	1.0	0.8		
160			5.5	4.3	3.2	3.2	1.8	1.5	1.2	1.1	0.9	
200				5.3	3.9	3.9	2.2	1.8	1.6	1.3	1.2	0.9
250					4.9	4.9	2.8	2.3	1.9	1.7	1.4	1.2
320							3.5	2.9	2.5	2.1	1.9	1.5
400							4.4	3.6	3.1	2.7	2.3	1.9
500								4.5	3.9	3.4	2.9	2.4
600									4.9	4.2	3.6	3.0
800										5.3	4.4	3.8
1,000											6.5	4.7

For a three-phase 230 V circuit, multiply the result by e
For a single-phase 208/230 V circuit, multiply the result by 2

b - DC circuits (copper conductors)

In	Sph (mN2)											
(A)	-	-	25	35	50	70	95	120	150	185	240	300
100			5.1	3.6	2.6	1.9	1.3	1.0	0.8	0.7	0.5	0.4
125				4.5	3.2	2.3	1.6	1.3	1.0	0.8	0.6	0.5
160					4.0	2.9	2.2	1.6	1.2	1.1	0.6	0.7
200						3.6	2.7	2.2	1.6	1.3	1.0	0.8
250							3.3	2.7	2.2	1.7	1.3	1.0
320								3.4	2.7	2.1	1.6	1.3
400									3.4	2.8	2.1	1.6
500										3.4	2.6	2.1
600										4.3	3.3	2.7
800											4.2	3.4
1,000											5.3	4.2
1,250												5.3

*Fig. N29 : Voltage drop in percent for **[a]** three-phase circuits and **[b]** DC circuits*

Special case for neutral conductors

In three-phase systems, the third-order harmonics (and their multiples) of single-phase loads add up in the neutral conductor (sum of the currents on the three phases).

For this reason, the following rule may be applied:

neutral cross section = 1.5 x phase cross section

2 Uninterruptible Power Supply units (UPS)

Example

Consider a 70-meter 400 V three-phase circuit, with copper conductors and a rated current of 600 A.

Standard IEC 60364 indicates, depending on the installation method and the load, a minimum cross section.

We shall assume that the minimum cross section is 95 mm^2.

It is first necessary to check that the voltage drop does not exceed 3%.

The table for three-phase circuits on the previous page indicates, for a 600 A current flowing in a 300 mm^2 cable, a voltage drop of 3% for 100 meters of cable, i.e. for 70 meters:

$$3 \times \frac{70}{100} = 2.1\ \%$$

Therefore less than 3%

A identical calculation can be run for a DC current of 1,000 A.
In a ten-meter cable, the voltage drop for 100 meters of 240 mN^2 cable is 5.3%, i.e. for ten meters:

$$5.3 \times \frac{10}{100} = 0.53\ \%$$

Therefore less than 3%

2.7 The UPSs and their environment

The UPSs can communicate with electrical and computing environment. They can receive some data and provide information on their operation in order:

- To optimize the protection

For example, the UPS provides essential information on operating status to the computer system (load on inverter, load on static bypass, load on battery, low battery warning)

- To remotely control

The UPS provides measurement and operating status information to inform and allow operators to take specific actions

- To manage the installation

The operator has a building and energy management system which allow to obtain and save information from UPSs, to provide alarms and events and to take actions.

This evolution towards compatibilty between computer equipment and UPSs has the effect to incorporate new built-in UPS functions.

2.8 Complementary equipment

Transformers

A two-winding transformer included on the upstream side of the static contactor of circuit 2 allows:

- A change of voltage level when the power network voltage is different to that of the load
- A change of system of earthing between the networks

Moreover, such a transformer :

- Reduces the short-circuit current level on the secondary, (i.e load) side compared with that on the power network side
- Prevents third harmonic currents which may be present on the secondary side from passing into the power-system network, providing that the primary winding is connected in delta.

Anti-harmonic filter

The UPS system includes a battery charger which is controlled by thyristors or transistors. The resulting regularly-chopped current cycles “generate” harmonic components in the power-supply network.

These indesirable components are filtered at the input of the rectifier and for most cases this reduces the harmonic current level sufficiently for all practical purposes.

2 Uninterruptible Power Supply units (UPS)

In certain specific cases however, notably in very large installations, an additional filter circuit may be necessary.
For example when :

- The power rating of the UPS system is large relative to the MV/LV transformer supplying it
- The LV busbars supply loads which are particularly sensitive to harmonics
- A diesel (or gas-turbine, etc,) driven alternator is provided as a standby power supply

In such cases, the manufacturer of the UPS system should be consulted

Communication equipment

Communication with equipment associated with computer systems may entail the need for suitable facilities within the UPS system. Such facilities may be incorporated



Fig. N30a : Ready-to-use UPS unit (with DIN module)



Fig. N30b : UPS unit achieving disponibility and quality of computer system power supply

3 Protection of LV/LV transformers

These transformers are generally in the range of several hundreds of VA to some hundreds of kVA and are frequently used for:

- Changing the low voltage level for:
  - Auxiliary supplies to control and indication circuits
  - Lighting circuits (230 V created when the primary system is 400 V 3-phase 3-wires)
- Changing the method of earthing for certain loads having a relatively high capacitive current to earth (computer equipment) or resistive leakage current (electric ovens, industrial-heating processes, mass-cooking installations, etc.)

LV/LV transformers are generally supplied with protective systems incorporated, and the manufacturers must be consulted for details. Overcurrent protection must, in any case, be provided on the primary side. The exploitation of these transformers requires a knowledge of their particular function, together with a number of points described below.

Note: In the particular cases of LV/LV safety isolating transformers at extra-low voltage, an earthed metal screen between the primary and secondary windings is frequently required, according to circumstances, as recommended in European Standard EN 60742.

3.1 Transformer-energizing inrush current

At the moment of energizing a transformer, high values of transient current (which includes a significant DC component) occur, and must be taken into account when considering protection schemes (see **Fig. N31**).

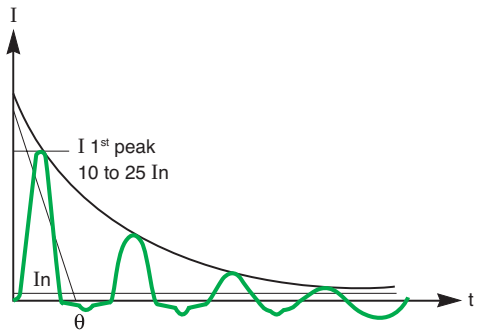

Fig N31 : Transformer-energizing inrush current

The magnitude of the current peak depends on:

- The value of voltage at the instant of energization
- The magnitude and polarity of the residual flux existing in the core of the transformer
- Characteristics of the load connected to the transformer

The first current peak can reach a value equal to 10 to 15 times the full-load r.m.s. current, but for small transformers (< 50 kVA) may reach values of 20 to 25 times the nominal full-load current. This transient current decreases rapidly, with a time constant θ of the order of several ms to severals tens of ms.

3.2 Protection for the supply circuit of a LV/LV transformer

The protective device on the supply circuit for a LV/LV transformer must avoid the possibility of incorrect operation due to the magnetizing inrush current surge, noted above.It is necessary to use therefore:

- Selective (i.e. slighly time-delayed) circuit-breakers of the type Compact NS STR (see **Fig. N32**) or
- Circuit-breakers having a very high magnetic-trip setting, of the types Compact NS or Multi 9 curve D (see **Fig. N33**)

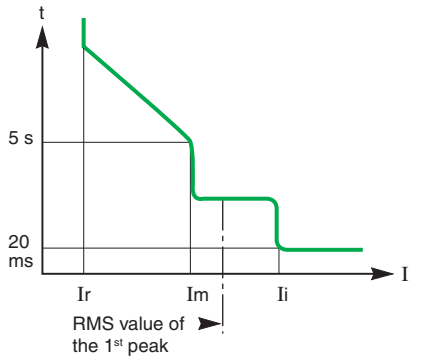

Fig N32 : Tripping characteristic of a Compact NS type STR (electronic)

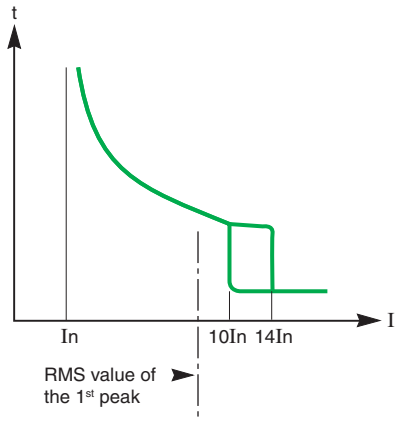

Fig N33 : Tripping characteristic of a Multi 9 curve D

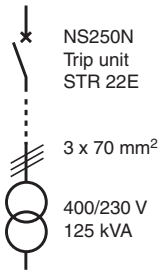

Fig N34 : Example

Example

A 400 V 3-phase circuit is supplying a 125 kVA 400/230 V transformer (In = 180 A) for which the first inrush current peak can reach 12 In, i.e. 12 x 180 = 2,160 A.
This current peak corresponds to a rms value of 1,530 A.
A compact NS 250N circuit-breaker with Ir setting of 200 A and Im setting at 8 x Ir would therefore be a suitable protective device.

A particular case: Overload protection installed at the secondary side of the transformer (see **Fig. N34**)

An advantage of overload protection located on the secondary side is that the short-circuit protection on the primary side can be set at a high value, or alternatively a circuit-breaker type MA (magnetic only) can be used. The primary side short-circuit protection setting must, however, be sufficiently sensitive to ensure its operation in the event of a short-circuit occuring on the secondary side of the transformer.

Note: The primary protection is sometimes provided by fuses, type aM. This practice has two disadvantages:

- The fuses must be largely oversized (at least 4 times the nominal full-load rated current of the transformer)
- In order to provide isolating facilities on the primary side, either a load-break switch or a contactor must be associated with the fuses.

3.3 Typical electrical characteristics of LV/LV 50 Hz transformers

3-phase																							
kVA rating	5	6.3	8	10	12.5	16	20	25	31.5	40	50	63	80	100	125	160	200	250	315	400	500	630	800
No-load losses (W)	100	110	130	150	160	170	270	310	350	350	410	460	520	570	680	680	790	950	1160	1240	1485	1855	2160
Full-load losses (W)	250	320	390	500	600	840	800	1180	1240	1530	1650	2150	2540	3700	3700	5900	5900	6500	7400	9300	9400	11400	13400
Short-circuit voltage (%)	4.5	4.5	4.5	5.5	5.5	5.5	5.5	5.5	5	5	4.5	5	5	5.5	4.5	5.5	5	5	4.5	6	6	5.5	5.5

1-phase														
kVA rating	8	10	12.5	16	20	25	31.5	40	50	63	80	100	125	160
No-load losses (W)	105	115	120	140	150	175	200	215	265	305	450	450	525	635
Full-load losses (W)	400	530	635	730	865	1065	1200	1400	1900	2000	2450	3950	3950	4335
Short-circuit voltage (%)	5	5	5	4.5	4.5	4.5	4	4	5	5	4.5	5.5	5	5

3.4 Protection of LV/LV transformers, using Merlin Gerin circuit-breakers

Multi 9 circuit-breaker

Transformer power rating (kVA) 230/240 V 1-ph	230/240 V 3-ph 400/415 V 1-ph	400/415 V 3-ph	Cricuit breaker curve D or K	Size (A)
0.05	0.09	0.16	C60, NG125	0.5
0.11	0.18	0.32	C60, NG125	1
0.21	0.36	0.63	C60, NG125	2
0.33	0.58	1.0	C60, NG125	3
0.67	1.2	2.0	C60, NG125	6
1.1	1.8	3.2	C60, C120, NG125	10
1.7	2.9	5.0	C60, C120, NG125	16
2.1	3.6	6.3	C60, C120, NG125	20
2.7	4.6	8.0	C60, C120, NG125	25
3.3	5.8	10	C60, C120, NG125	32
4.2	7.2	13	C60, C120, NG125	40
5.3	9.2	16	C60, C120, NC100, NG125	50
6.7	12	20	C60, C120, NC100, NG125	63
8.3	14	25	C120, NC100, NG125	80
11	18	32	C120, NC100, NG125	100
13	23	40	C120, NG125	125

Compact NS100…NS250 circuit-breakers with TM-D trip unit

Transformer power rating (kVA)			Circuit-breaker	Trip unit
230/240 V 1-ph	230/240 V 3-ph 400/415 V 1-ph	400/415 V 3-ph		
3	5…6	9…12	NS100N/H/L	TN16D
5	8…9	14…16	NS100N/H/L	TM05D
7…9	13…16	22…28	NS100N/H/L	TN40D
12…15	20…25	35…44	NS100N/H/L	TN63D
16…19	26…32	45…56	NS100N/H/L	TN80D
18…23	32…40	55…69	NS160N/H/L	TN100D
23…29	40…50	69…87	NS160N/H/L	TN125D
29…37	51…64	89…111	NS250N/H/L	TN160D
37…46	64…80	111…139	NS250N/H/L	TN200D

Compact NS100…NS1600 and Masterpact circuit-breakers with STR or Micrologic trip unit

Transformer power rating (kVA)			Circuit-breaker	Trip unit	Setting Ir max
230/240 V 1-ph	230/240 V 3-ph 400/415 V 1-ph	400/415 V 3-ph			
4…7	6…13	11…22	NS100N/H/L	STR22SE 40	0.8
9…19	16…30	27…56	NS100N/H/L	STR22SE 100	0.8
15…30	5…50	44…90	NS160N/H/L	STR22SE 160	0.8
23…46	40…80	70…139	NS250N/H/L	STR22SE 250	0.8
37…65	64…112	111…195	NS400N/H	STR23SE / 53UE 400	0.7
37…55	64…95	111…166	NS400L	STR23SE / 53UE 400	0.6
58…83	100…144	175…250	NS630N/H/L	STR23SE / 53UE 630	0.6
58…150	100…250	175…436	NS800N/H - NT08H1	Micrologic 5.0/6.0/7.0	1
74…184	107…319	222…554	NS800N/H - NT08H1 - NW08N1/H1	Micrologic 5.0/6.0/7.0	1
90…230	159…398	277…693	NS1000N/H - NT10H1 - NW10N1/H1	Micrologic 5.0/6.0/7.0	1
115…288	200…498	346…866	NS1250N/H - NT12H1 - NW12N1/H1	Micrologic 5.0/6.0/7.0	1
147…368	256…640	443…1,108	NS1600N/H - NT16H1 - NW16N1/H1	Micrologic 5.0/6.0/7.0	1
184…460	320…800	554…1,385	NW20N1/H1	Micrologic 5.0/6.0/7.0	1
230…575	400…1,000	690…1,730	NW25N2/H3	Micrologic 5.0/6.0/7.0	1
294…736	510…1,280	886…2,217	NW32N2/H3	Micrologic 5.0/6.0/7.0	1