Chapter Q
EMC guidelines

Contents

1	**Electrical distribution**	**Q2**
2	**Earthing principles and structures**	**Q3**
3	**Implementation**	**Q5**
	3.1 Equipotential bonding inside and outside buildings	Q5
	3.2 Improving equipotential conditions	Q5
	3.3 Separating cables	Q7
	3.4 False floor	Q7
	3.5 Cable running	Q8
	3.6 Implementation of shielded cables	Q11
	3.7 Communication networks	Q11
	3.8 Implementation of surge arrestors	Q12
	3.9 Cabinet cabling	Q13
	3.10 Standards	Q13
4	**Coupling mechanisms and counter-measures**	**Q14**
	4.1 General	Q14
	4.2 Common-mode impedance coupling	Q15
	4.3 Capacitive coupling	Q16
	4.4 Inductive coupling	Q17
	4.5 Radiated coupling	Q18
5	**Wiring recommendations**	**Q20**
	5.1 Signal classes	Q20
	5.2 Wiring recommendations	Q20

1 Electrical distribution

The system earthing arrangement must be properly selected to ensure the safety of life and property. The behaviour of the different systems with respect to EMC considerations must be taken into account. **Figure Q1** below presents a summary of their main characteristics.

European standards (see EN 50174-2 § 6.4 and EN 50310 § 6.3) recommend the TN-S system which causes the fewest EMC problems for installations comprising information-technology equipment (including telecom equipment).

	TT	TN-S	IT	TN-C
Safety of persons	Good RCD mandatory	Good Continuity of the PE conductor must be ensured throughout the installation		
Safety of property	Good	Poor	Good	Poor
	Medium fault current (< a few dozen amperes)	High fault current (around 1 kA)	Low current for first fault (< a few dozen mA), but high for second fault	High fault current (around 1 kA)
Availability of energy	Good	Good	Excellent	Good
EMC behaviour	Good - Risk of overvoltages - Equipotential problems - Need to manage devices with high leakage currents	Excellent - Few equipotential problems - Need to manage devices with high leakage currents - High fault currents (transient disturbances)	Poor (to be avoided) - Risk of overvoltages - Common-mode filters and surge arrestors must handle the phase-to-phase voltages - RCDs subject to nuisance tripping if common-mode capacitors are present - Equivalent to TN system for second fault	Poor (should never be used) - Neutral and PE are the same - Circulation of disturbed currents in exposed conductive parts (high magnetic-field radiation) - High fault currents (transient disturbances)

Fig. Q1 : Main characteristics of system earthing

When an installation includes high-power equipment (motors, air-conditioning, lifts, power electronics, etc.), it is advised to install one or more transformers specifically for these systems. Electrical distribution must be organised in a star system and all outgoing circuits must exit the main low-voltage switchboard (MLVS).

Electronic systems (control/monitoring, regulation, measurement instruments, etc.) must be supplied by a dedicated transformer in a TN-S system.

Figure Q2 below illustrate these recommendations.

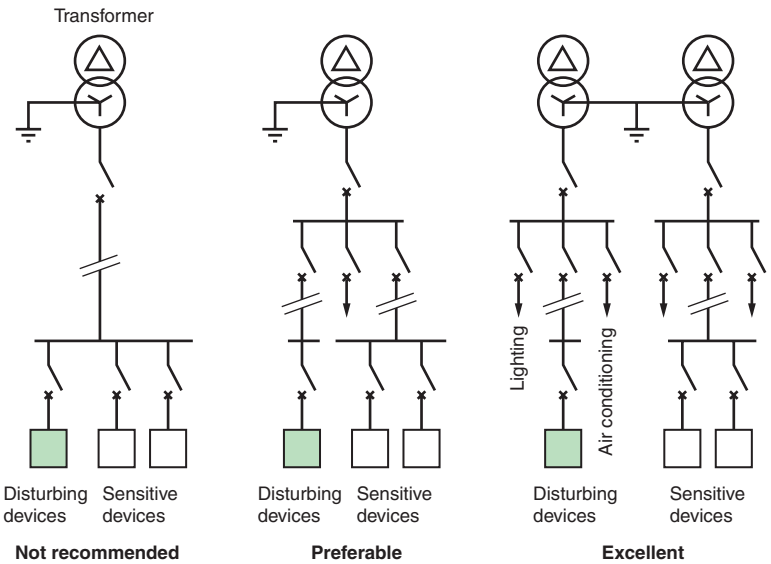

Fig. Q2 : Recommendations of separated distributions

2 Earthing principles and structures

This section deals with the earthing and equipotential bonding of information-technology devices and other similar devices requiring interconnections for signalling purposes.

Earthing networks are designed to fulfil a number of functions. They can be independent or operate together to provide one or more of the following:

- Safety of persons with respect to electrical hazards
- Protection of equipment with respect to electrical hazards
- A reference value for reliable, high-quality signals
- Satisfactory EMC performance

The system earthing arrangement is generally designed and installed in view of obtaining a low impedance capable of diverting fault currents and HF currents away from electronic devices and systems. There are different types of system earthing arrangements and some require that specific conditions be met. These conditions are not always met in typical installations. The recommendations presented in this section are intended for such installations.

For professional and industrial installations, a common bonding network (CBN) may be useful to ensure better EMC performance with respect to the following points:

- Digital systems and new technologies
- Compliance with the EMC requirements of EEC 89/336 (emission and immunity)
- The wide number of electrical applications
- A high level of system safety and security, as well as reliability and/or availability

For residential premises, however, where the use of electrical devices is limited, an isolated bonding network (IBN) or, even better, a mesh IBN may be a solution.

It is now recognised that independent, dedicated earth electrodes, each serving a separate earthing network, are a solution that is not acceptable in terms of EMC, but also represent a serious safety hazard. In certain countries, the national building codes forbid such systems.

Use of a separate “clean” earthing network for electronics and a “dirty” earthing network for energy is not recommended in view of obtaining correct EMC, even when a single electrode is used (see **Fig. Q3** and **Fig. Q4**). In the event of a lightning strike, a fault current or HF disturbances as well as transient currents will flow in the installation. Consequently, transient voltages will be created and result in failures or damage to the installation. If installation and maintenance are carried out properly, this approach may be dependable (at power frequencies), but it is generally not suitable for EMC purposes and is not recommended for general use.

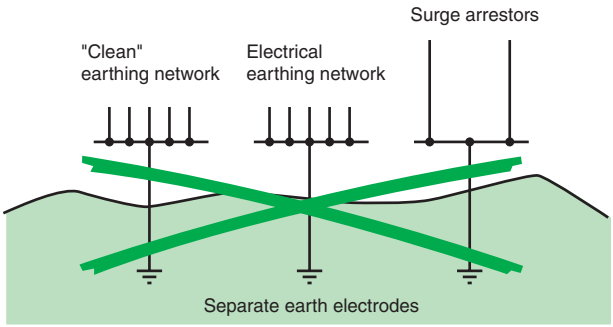

Fig. Q3 : Independent earth electrodes, a solution generally not acceptable for safety and EMC reasons

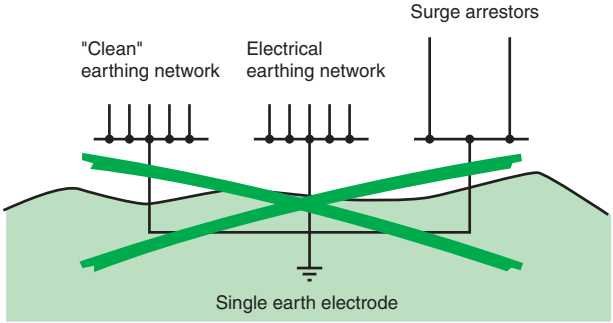

Fig. Q4 : Installation with a single earth electrode

2 Earthing principles and structures

The recommended configuration for the earthing network and electrodes is two or three dimensional (see **Fig. Q5**). This approach is advised for general use, both in terms of safety and EMC. This recommendation does not exclude other special configurations that, when correctly maintained, are also suitable.

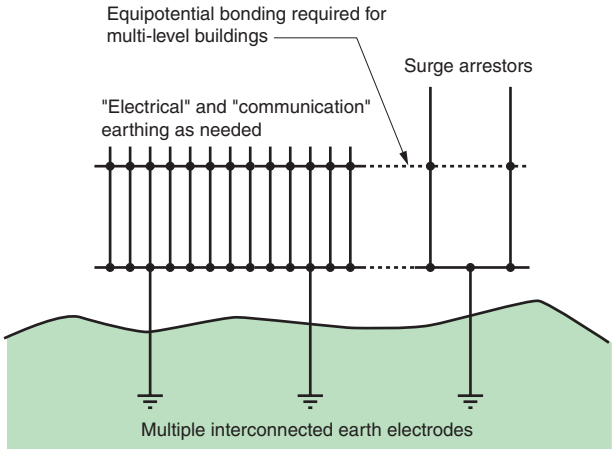

***Fig. Q5** : Installation with multiple earth electrodes*

In a typical installation for a multi-level building, each level should have its own earthing network (generally a mesh) and all the networks must be both interconnected and connected to the earth electrode. At least two connections are required (built in redundancy) to ensure that, if one conductor breaks, no section of the earthing network is isolated.

Practically speaking, more than two connections are made to obtain better symmetry in current flow, thus reducing differences in voltage and the overall impedance between the various levels in the building.

The many parallel paths have different resonance frequencies. If one path has a high impedance, it is most probably shunted by another path with a different resonance frequency. On the whole, over a wide frequency spectrum (dozens of Hz and MHz), a large number of paths results in a low-impedance system (see **Fig. Q6**).

Each room in the building should have earthing-network conductors for equipotential bonding of devices and systems, cableways, trunking systems and structures. This system can be reinforced by connecting metal pipes, gutters, supports, frames, etc. In certain special cases, such as control rooms or computers installed on false floors, ground reference plane or earthing strips in areas for electronic systems can be used to improve earthing of sensitive devices and protection interconnection cables.

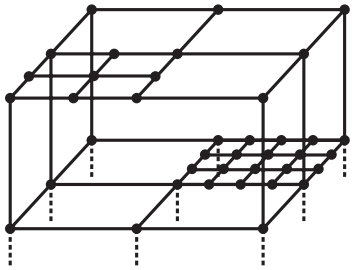

***Fig. Q6** : Each level has a mesh and the meshes are interconnected at several points between levels. Certain ground-floor meshes are reinforced to meet the needs of certain areas*

3 Implementation

3.1 Equipotential bonding inside and outside buildings

The fundamental goals of earthing and bonding are the following:

- Safety

By limiting the touch voltage and the return path of fault currents

- EMC

By avoiding differences in potential and providing a screening effect.

Stray currents are inevitably propagated in an earthing network. It is impossible to eliminate all the sources of disturbances for a site. Earth loops are also inevitable. When a magnetic field affects a site, e.g. the field created by lightning, differences in potential are created in the loops formed by the various conductors and the currents flowing in the earthing system. Consequently, the earthing network is directly affected by any counter-measures taken outside the building.

As long as the currents flow in the earthing system and not in the electronic circuits, they do no damage. However, when earthing networks are not equipotential, e.g. when they are star connected to the earth electrode, the HF stray currents will flow wherever they can, including in control wires. Equipment can be disturbed, damaged or even destroyed.

The only inexpensive means to divide the currents in an earthing system and maintain satisfactory equipotential characteristics is to interconnect the earthing networks. This contributes to better equipotential bonding within the earthing system, but does not remove the need for protective conductors. To meet legal requirements in terms of the safety of persons, sufficiently sized and identified protective conductors must remain in place between each piece of equipment and the earthing terminal. What is more, with the possible exception of a building with a steel structure, a large number of conductors for the surge-arrestor or the lightning-protection network must be directly connected to the earth electrode.

The fundamental difference between a protective conductor (PE) and a surge-arrestor down-lead is that the first conducts internal currents to the neutral of the MV/LV transformer whereas the second carries external current (from outside the installation) to the earth electrode.

In a building, it is advised to connect an earthing network to all accessible conducting structures, namely metal beams and door frames, pipes, etc. It is generally sufficient to connect metal trunking, cable trays and lintels, pipes, ventilation ducts, etc. at as many points as possible. In places where there is a large amount of equipment and the size of the mesh in the bonding network is greater than four metres, an equipotential conductor should be added. The size and type of conductor are not of critical importance.

It is imperative to interconnect the earthing networks of buildings that have shared cable connections. Interconnection of the earthing networks must take place via a number of conductors and all the internal metal structures of the buildings or linking the buildings (on the condition that they are not interrupted).

In a given building, the various earthing networks (electronics, computing, telecom, etc.) must be interconnected to form a single equipotential bonding network.

This earthing-network must be as meshed as possible. If the earthing network is equipotential, the differences in potential between communicating devices will be low and a large number of EMC problems disappear. Differences in potential are also reduced in the event of insulation faults or lightning strikes.

If equipotential conditions between buildings cannot be achieved or if the distance between buildings is greater than ten metres, it is highly recommended to use optical fibre for communication links and galvanic insulators for measurement and communication systems.

These measures are mandatory if the electrical supply system uses the IT or TN-C system.

3.2 Improving equipotential conditions

Bonding networks

Even though the ideal bonding network would be made of sheet metal or a fine mesh, experience has shown that for most disturbances, a three-metre mesh size is sufficient to create a mesh bonding network.

Examples of different bonding networks are shown in **Figure Q7** next page. The minimum recommended structure comprises a conductor (e.g. copper cable or strip) surrounding the room.

3 Implementation

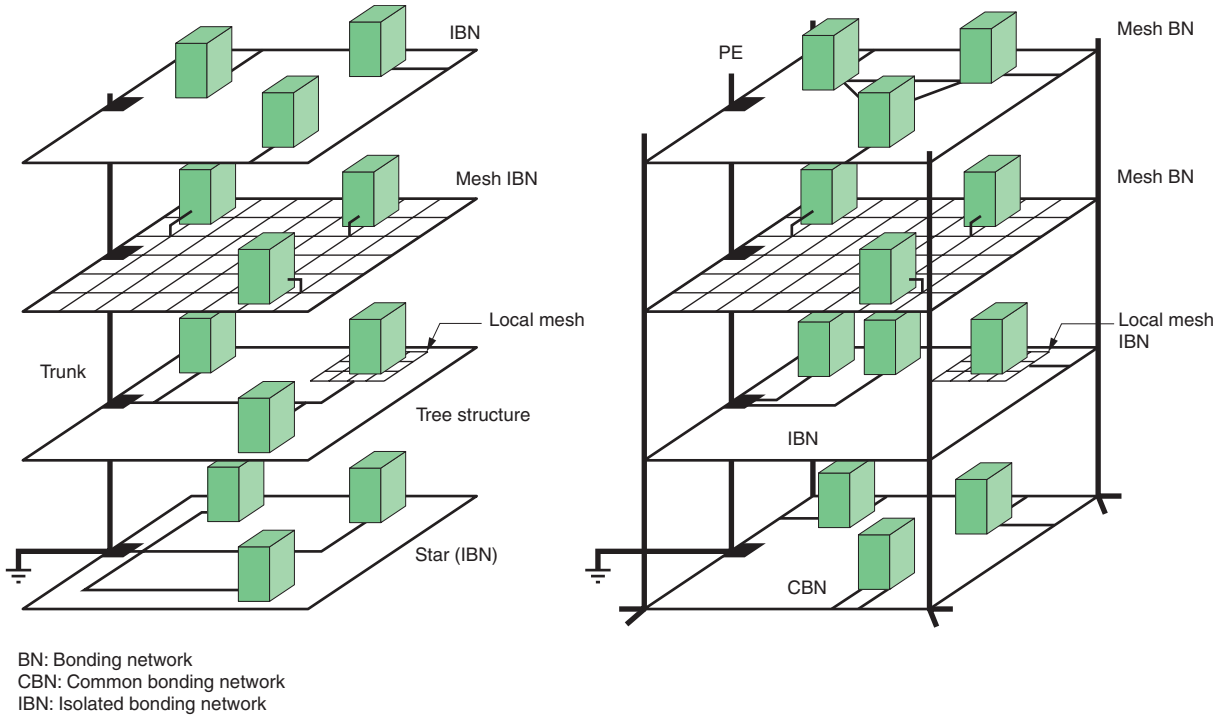

BN: Bonding network
CBN: Common bonding network
IBN: Isolated bonding network

Fig. Q7 : Examples of bonding networks

The length of connections between a structural element and the bonding network does not exceed 50 centimetres and an additional connection should be installed in parallel at a certain distance from the first. The inductance of the connection between the earthing bar of the electrical enclosure for a set of equipment and the bonding network (see below) should be less than one µHenry (0.5 µH, if possible). For example, it is possible to use a single 50 cm conductor or two parallel conductors one meter long, installed at a minimum distance from one another (at least 50 cm) to reduce the mutual inductance between the two conductors.

Where possible, connection to the bonding network should be at an intersection to divide the HF currents by four without lengthening the connection. The profile of the bonding conductors is not important, but a flat profile is preferable. The conductor should also be as short as possible.

Parallel earthing conductor (PEC)

The purpose of a parallel earthing conductor is to reduce the common-mode current flowing in the conductors that also carry the differential-mode signal (the common-mode impedance and the surface area of the loop are reduced).

The parallel earthing conductor must be designed to handle high currents when it is used for protection against lightning or for the return of high fault currents. When cable shielding is used as a parallel earthing conductor, it cannot handle such high currents and the solution is to run the cable along metal structural elements or cableways which then act as other parallel earthing conductors for the entire cable. Another possibility is to run the shielded cable next to a large parallel earthing conductor with both the shielded cable and the parallel earthing conductor connected at each end to the local earthing terminal of the equipment or the device.

For very long distances, additional connections to the network are advised for the parallel earthing conductor, at irregular distances between the devices. These additional connections form a shorter return path for the disturbing currents flowing through the parallel earthing conductor. For U-shaped trays, shielding and tubes, the additional connections should be external to maintain the separation with the interior ("screening" effect).

Bonding conductors

Bonding conductors may be metal strips, flat braids or round conductors. For high-frequency systems, metal strips and flat braids are preferable (skin effect) because a round conductor has a higher impedance than a flat conductor with the same cross section. Where possible, the length to width ratio should not exceed 5.

3 Implementation

3.3 Separating cables

The physical separation of high and low-current cables is very important for EMC, particularly if low-current cables are not shielded or the shielding is not connected to the exposed conductive parts (ECPs). The sensitivity of electronic equipment is in large part determined by the accompanying cable system.

If there is no separation (different types of cables in separate cableways, minimum distance between high and low-current cables, types of cableways, etc.), electromagnetic coupling is at its maximum. Under these conditions, electronic equipment is sensitive to EMC disturbances flowing in the affected cables.

Use of busbar trunking systems such as Canalis or busbar ducts for high power ratings is strongly advised. The levels of radiated magnetic fields using these types of trunking systems is 10 to 20 times lower than standard cables or conductors.

The recommendations in the “Cable running” and “Wiring recommendations” sections should be taken into account.

3.4 False floors

The inclusion of the floors in the mesh contributes to equipotentiality of the area and consequently to the distribution and dilution of disturbing LF currents.

The screening effect of a false floor is directly related to its equipotentiality. If the contact between the floor plates is poor (rubber antistatic joints, for example) or if the contact between the support brackets is faulty (pollution, corrosion, mildew, etc. or if there are no support brackets), it is necessary to add an equipotential mesh. In this case, it is sufficient to ensure effective electrical connections between the metal support columns. Small spring clips are available on the market to connect the metal columns to the equipotential mesh. Ideally, each column should be connected, but it is often sufficient to connect every other column in each direction. A mesh 1.5 to 2 metres is size is suitable in most cases. The recommended cross-sectional area of the copper is 10 mm^2 or more. In general, a flat braid is used. To reduce the effects of corrosion, it is advised to use tin-plated copper (see **Fig. Q8**).

Perforated floor plates act like normal floor plates when they have a cellular steel structure.

Preventive maintenance is required for the floor plates approximately every five years (depending on the type of floor plate and the environment, including humidity, dust and corrosion). Rubber or polymer antistatic joints must be maintained, similar to the bearing surfaces of the floor plates (cleaning with a suitable product).

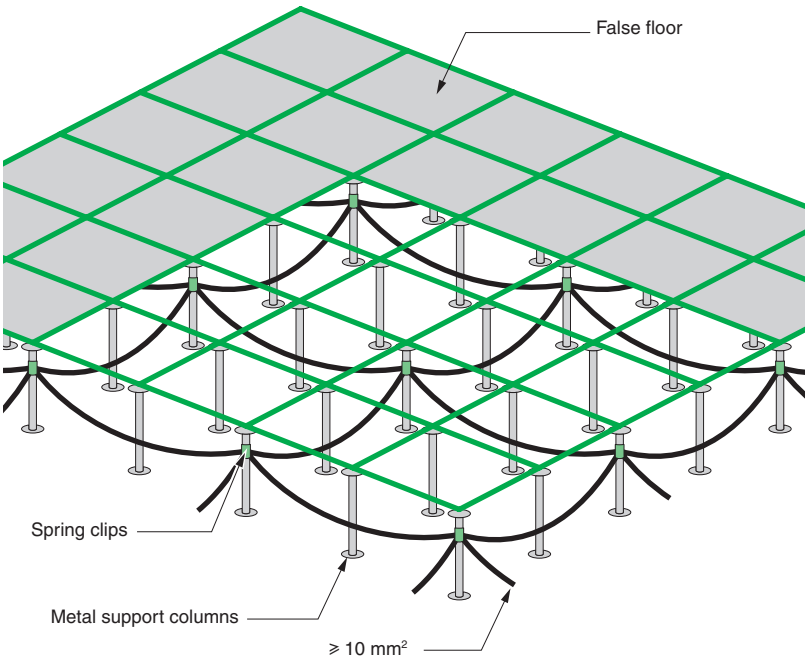

Fig. Q8 : False floor implementation

3 Implementation

3.5 Cable running

Selection of materials and their shape depends on the following criteria:
- Severity of the EM environment along cableways (proximity of sources of conducted or radiated EM disturbances)
- Authorised level of conducted and radiated emissions
- Type of cables (shielded?, twisted?, optical fibre?)
- EMI withstand capacity of the equipment connected to the wiring system
- Other environmental constraints (chemical, mechanical, climatic, fire, etc.)
- Future extensions planned for the wiring system

Non-metal cableways are suitable in the following cases:
- A continuous, low-level EM environment
- A wiring system with a low emission level
- Situations where metal cableways should be avoided (chemical environment)
- Systems using optical fibres

For metal cableways, it is the shape (flat, U-shape, tube, etc.) rather than the cross-sectional area that determines the characteristic impedance. Closed shapes are better than open shapes because they reduce common-mode coupling. Cableways often have slots for cable straps. The smaller the better. The types of slots causing the fewest problems are those cut parallel and at some distance from the cables. Slots cut perpendicular to the cables are not recommended (see **Fig. Q9**).

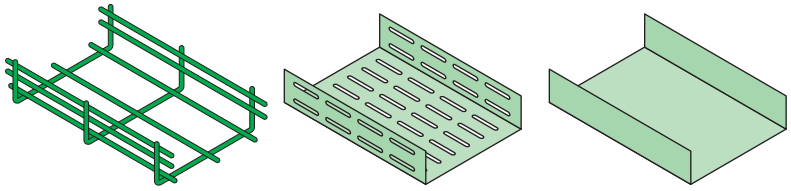

Fig. Q9 : CEM performance of various types of metal cableways

In certain cases, a poor cableway in EMI terms may be suitable if the EM environment is low, if shielded cables or optical fibres are employed, or separate cableways are used for the different types of cables (power, data processing, etc.).

It is a good idea to reserve space inside the cableway for a given quantity of additional cables. The height of the cables must be lower than the partitions of the cableway as shown below. Covers also improve the EMC performance of cableways.

In U-shaped cableways, the magnetic field decreases in the two corners. That explains why deep cableways are preferable (see **Fig. Q10**).

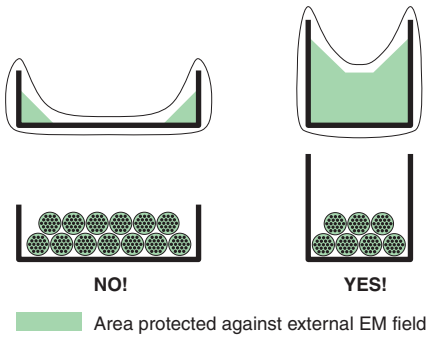

Fig. Q10 : Installation of different types of cables

Different types of cables (power and low-level connections) should not be installed in the same bundle or in the same cableway. Cableways should never be filled to more than half capacity.

3 Implementation

It is recommended to electromagnetically separate groups from one another, either using shielding or by installing the cables in different cableways. The quality of the shielding determines the distance between groups. If there is no shielding, sufficient distances must be maintained (see **Fig. Q11**).
The distance between power and control cables must be at least 5 times the radius of the larger power cable.

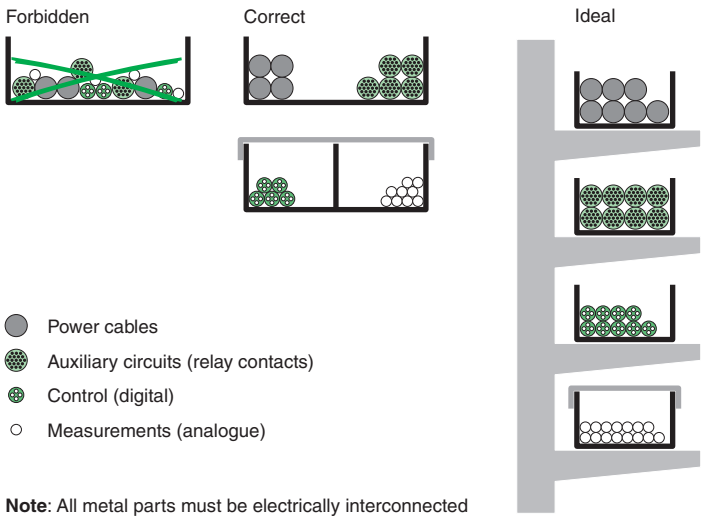

Fig. Q11 : Recommendation to install groups of cables in metal cableways

Metal building components can be used for EMC purposes. Steel beams (L, H, U or T shaped) often form an uninterrupted earthed structure with large transversal sections and surfaces with numerous intermediate earthing connections. Cables should if possible be run along such beams. Inside corners are better than the outside surfaces (see **Fig. Q12**).

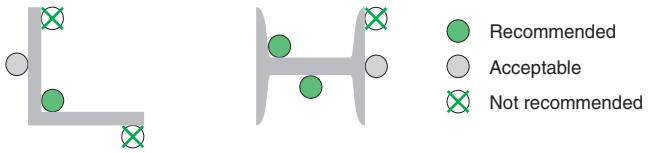

Fig. Q12 : Recommendation to install cables in steel beams

Both ends of metal cableways must always be connected to local earth electrodes. For very long cableways, additional connections to the earthing system are recommended between connected devices. Where possible, the distance between these earthing connections should be irregular (for symmetrical wiring systems) to avoid resonance at identical frequencies. All connections to the earthing system should be short.
Metal and non-metal cableways are available. Metal solutions offer better EMC characteristics. A cableway (cable trays, conduits, cable brackets, etc.) must offer a continuous, conducting metal structure from beginning to end.
An aluminium cableway has a lower DC resistance than a steel cableway of the same size, but the transfer impedance (Zt) of steel drops at a lower frequency, particularly when the steel has a high relative permeability μ_r. Care must be taken when different types of metal are used because direct electrical connection is not authorised in certain cases to avoid corrosion. That could be a disadvantage in terms of EMC.
When devices connected to the wiring system using unshielded cables are not affected by low-frequency disturbances, the EMC of non-metal cableways can be improved by adding a parallel earthing conductor (PEC) inside the cableway. Both ends must be connected to the local earthing system. Connections should be made to a metal part with low impedance (e.g. a large metal panel of the device case).
The PEC should be designed to handle high fault and common-mode currents.

3 Implementation

Implementation

When a metal cableway is made up of a number of short sections, care is required to ensure continuity by correctly bonding the different parts. The parts should preferably be welded along all edges. Riveted, bolted or screwed connections are authorised as long as the contact surfaces conduct current (no paint or insulating coatings) and are protected against corrosion. Tightening torques must be observed to ensure correct pressure for the electrical contact between two parts.

When a particular shape of cableway is selected, it should be used for the entire length. All interconnections must have a low impedance. A single wire connection between two parts of the cableway produces a high local impedance that cancels its EMC performance.

Starting at a few MHz, a ten-centimetre connection between two parts of the cableway reduces the attenuation factor by more than a factor of ten (see **Fig. Q13**).

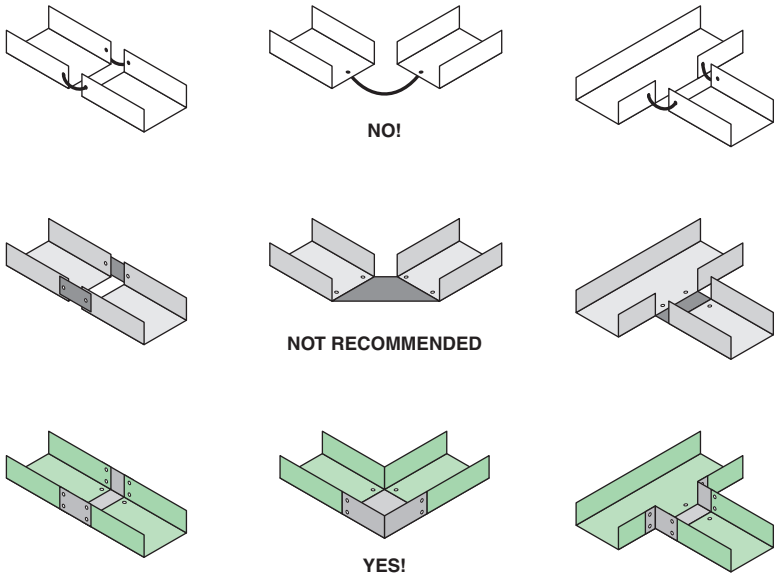

Fig. Q13 : Metal cableways assembly

Each time modifications or extensions are made, it is very important to make sure they are carried out according to EMC rules (e.g. never replace a metal cableway by a plastic version!).

Covers for metal cableways must meet the same requirements as those applying to the cableways themselves. A cover should have a large number of contacts along the entire length. If that is not possible, it must be connected to the cableway at least at the two ends using short connections (e.g. braided or meshed connections).

When cableways must be interrupted to pass through a wall (e.g. firewalls), low-impedance connections must be used between the two parts (see **Fig. Q14**).

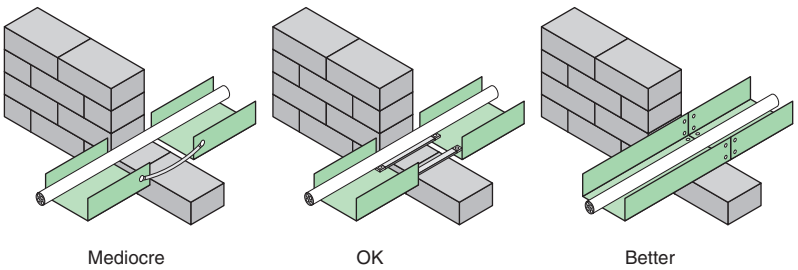

Fig. Q14 : Recommendation for metal cableways assembly to pass through a wall

3.6 Implementation of shielded cables

When the decision is made to use shielded cables, it is also necessary to determine how the shielding will be bonded (type of earthing, connector, cable entry, etc.), otherwise the benefits are considerably reduced. To be effective, the shielding should be bonded over 360°. **Figure Q15** below show different ways of earthing the cable shielding.

For computer equipment and digital links, the shielding should be connected at each end of the cable.

Connection of the shielding is very important for EMC and the following points should be noted.

If the shielded cable connects equipment located in the same equipotential bonding area, the shielding must be connected to the exposed conductive parts (ECP) at both ends. If the connected equipment is not in the same equipotential bonding area, there are a number of possibilities.

- Connection of only one end to the ECPs is dangerous. If an insulation fault occurs, the voltage in the shielding can be fatal for an operator or destroy equipment. In addition, at high frequencies, the shielding is not effective.
- Connection of both ends to the ECPs can be dangerous if an insulation fault occurs. A high current flows in the shielding and can damage it. To limit this problem, a parallel earthing conductor (PEC) must be run next to the shielded cable. The size of the PEC depends on the short-circuit current in the given part of the installation. It is clear that if the installation has a well meshed earthing network, this problem does not arise.

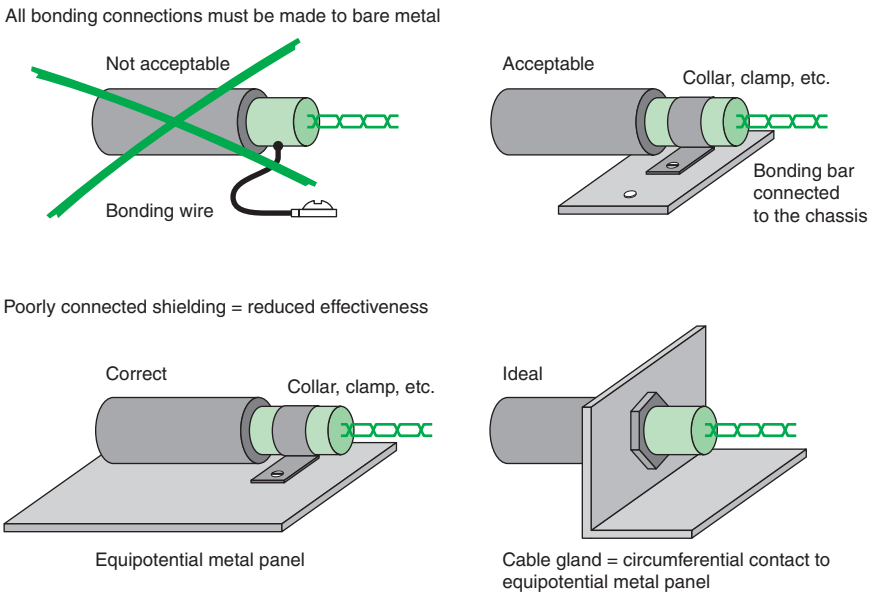

Fig. Q15 : Implementation of shielded cables

3.7 Communication networks

Communication networks cover large distances and interconnect equipment installed in rooms that may have distribution systems with different system earthing arrangements. In addition, if the various sites are not equipotential, high transient currents and major differences in potential may occur between the various devices connected to the networks. As noted above, this is the case when insulation faults and lightning strikes occur. The dielectric withstand capacity (between live conductors and exposed conductive parts) of communication cards installed in PCs or PLCs generally does not exceed 500 V. At best, the withstand capacity can reach 1.5 kV. In meshed installations with the TN-S system and relatively small communication networks, this level of withstand capacity is acceptable. In all cases, however, protection against lightning strikes (common and differential modes) is recommended.

3 Implementation

The type of communication cable employed is an important parameter. It must be suited to the type of transmission. To create a reliable communication link, the following parameters must be taken into account:

- Characteristic impedance
- Twisted pairs or other arrangement
- Resistance and capacitance per unit length
- Signal attenuation per unit length
- The type(s) of shielding used

In addition, it is important to use symmetrical (differential) transmission links because they offer higher performance in terms of EMC.

In environments with severe EM conditions, however, or for wide communication networks between installations that are not or are only slightly equipotential, in conjunction with IT, TT or TN-C systems, it is highly recommended to use optical fibre links.

For safety reasons, the optical fibre must not have metal parts (risk of electric shock if the fibre links two areas with different potentials).

3.8 Implementation of surge arrestors

The wiring of surge arrestors is as important as the selection of the surge arrestor itself. **Figures Q16** and **Q17a** below shows that the connection cables of the surge arrestor and its disconnection circuit-breaker must not exceed 50 centimetres to ensure effective protection.

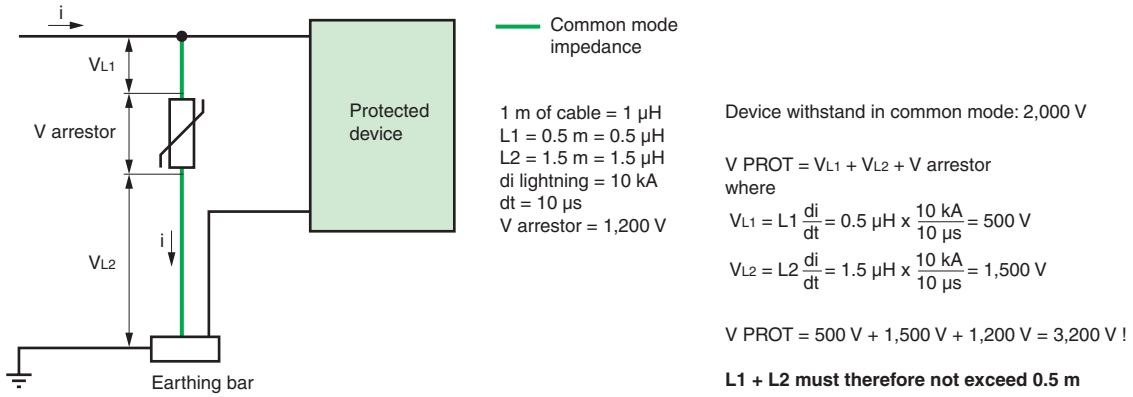

Q12

Fig. Q16 : The protected device must be connected to the surge-arrestor terminals

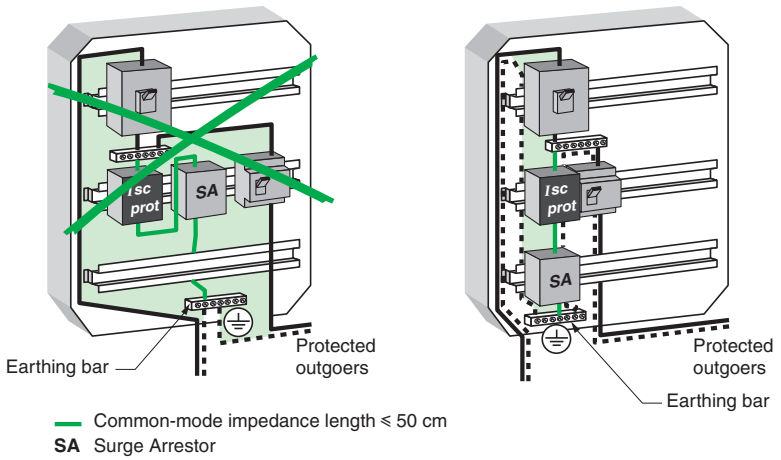

Fig. Q17a : Examples of assemblies combining surge arrestors (SA) and disconnection circuit-breakers to reduce the common-mode impedances and the area of upstream-downstream loops

3.9 Cabinet cabling (Fig. Q18)

Each cabinet must be equipped with an earthing bar or a ground reference metal sheet. All shielded cables and external protection circuits must be connected to this point. Anyone of the cabinet metal sheets or the DIN rail can be used as the ground reference.
Plastic cabinets are not recommended. In this case, the DIN rail must be used as ground reference.

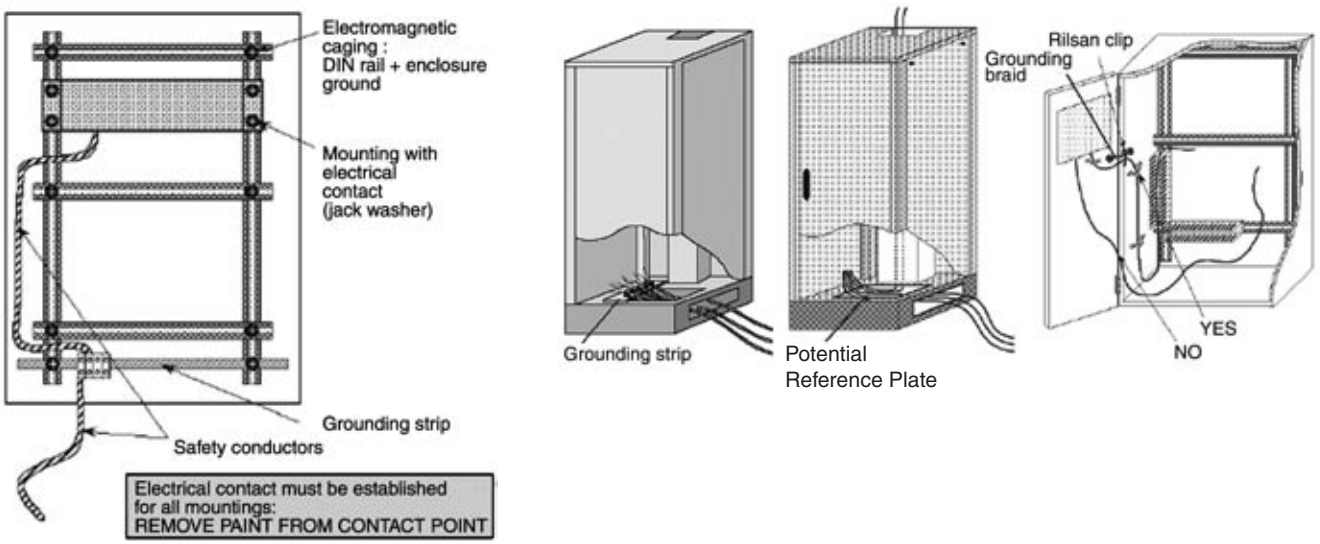

Fig. Q17b : The protected device must be connected to the surge-arrestor terminals

3.10 Standards

It is absolutely essential to specify the standards and recommendations that must be taken into account for installations.

Below are several documents that may be used:

- EN 50174-1 Information technology - Cabling installation. Part 1: Specification and quality assurance
- EN 50174-2 Information technology - Cabling installation. Part 2: Installation planning and practices inside buildings

4 Coupling mechanisms and counter-measures

4.1 General

An EM interference phenomenon may be summed up in **Figure Q18** below.

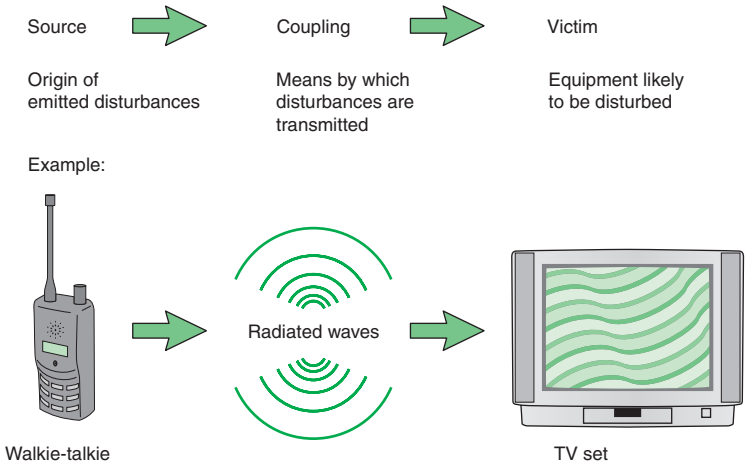

Fig. Q18 : EM interference phenomenon

The different sources of disturbances are:
- Radio-frequency emissions
  - Wireless communication systems (radio, TV, CB, radio telephones, remote controls)
  - Radar
- Electrical equipment
  - High-power industrial equipment (induction furnaces, welding machines, stator control systems)
  - Office equipment (computers and electronic circuits, photocopy machines, large monitors)
  - Discharge lamps (neon, fluorescent, flash, etc.)
  - Electromechanical components (relays, contactors, solenoids, current interruption devices)
- Power systems
  - Power transmission and distribution systems
  - Electrical transportation systems
- Lightning
- Electrostatic discharges (ESD)
- Electromagnetic nuclear pulses (EMNP)

The potential victims are:
- Radio and television receivers, radar, wireless communication systems
- Analogue systems (sensors, measurement acquisition, amplifiers, monitors)
- Digital systems (computers, computer communications, peripheral equipment)

The different types of coupling are:
- Common-mode impedance (galvanic) coupling
- Capacitive coupling
- Inductive coupling
- Radiated coupling (cable to cable, field to cable, antenna to antenna)

4 Coupling mechanisms and counter-measures

4.2 Common-mode impedance coupling

Definition

Two or more devices are interconnected by the power supply and communication cables (see **Fig. Q19**). When external currents (lightning, fault currents, disturbances) flow via these common-mode impedances, an undesirable voltage appears between points A and B **which are supposed to be equipotential**. This stray voltage can disturb low-level or fast electronic circuits.

All cables, including the protective conductors, have an impedance, particularly at high frequencies.

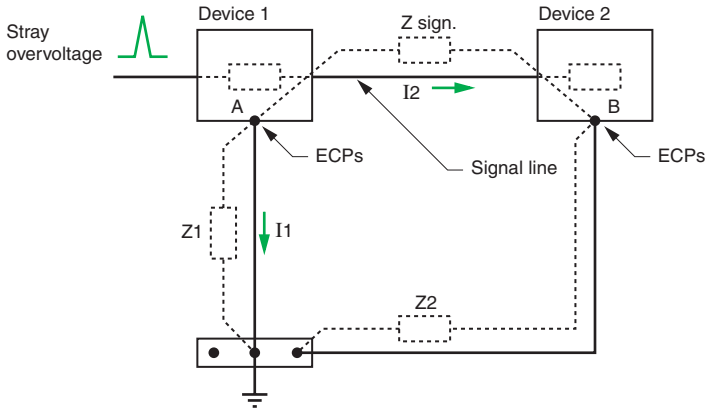

The exposed conductive parts (ECP) of devices 1 and 2 are connected to a common earthing terminal via connections with impedances Z1 and Z2.

The stray overvoltage flows to the earth via Z1. The potential of device 1 increases to Z1 I1. The difference in potential with device 2 (initial potential = 0) results in the appearance of current I2.

$$Z1\ I1 = (Zsign + Z2)\,I2 \Rightarrow \frac{I2}{I1} = \frac{Z1}{(Zsign + Z2)}$$

Current I2, present on the signal line, disturbs device 2.

Fig. Q19 : Definition of common-mode impedance coupling

Examples (see **Fig. Q20**)

- Devices linked by a common reference conductor (e.g. PEN, PE) affected by fast or intense (di/dt) current variations (fault current, lightning strike, short-circuit, load changes, chopping circuits, harmonic currents, power factor correction capacitor banks, etc.)
- A common return path for a number of electrical sources

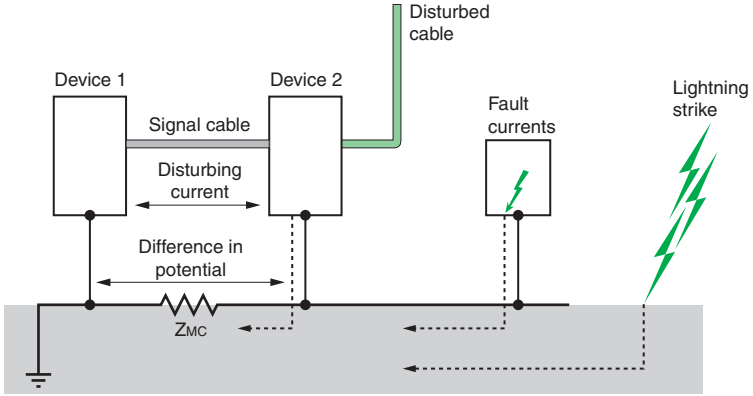

Fig. Q20 : Example of common-mode impedance coupling

Q15

4 Coupling mechanisms and counter-measures

Counter-measures (see **Fig. Q21**)

If they cannot be eliminated, common-mode impedances must at least be as low as possible. To reduce the effects of common-mode impedances, it is necessary to:

- Reduce impedances:
  - Mesh the common references,
  - Use short cables or flat braids which, for equal sizes, have a lower impedance than round cables,
  - Install functional equipotential bonding between devices.
- Reduce the level of the disturbing currents by adding common-mode filtering and differential-mode inductors

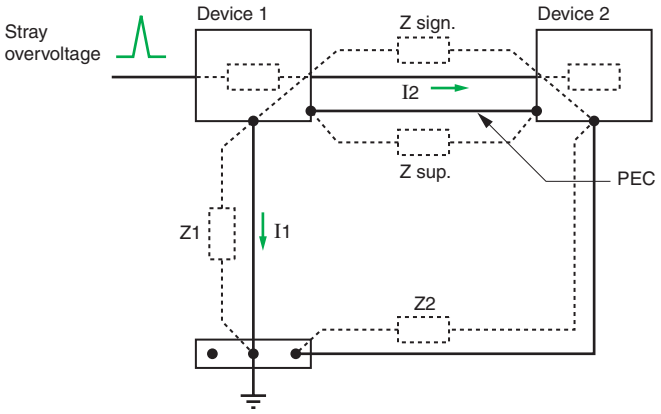

If the impedance of the parallel earthing conductor PEC (Z sup) is very low compared to Z sign, most of the disturbing current flows via the PEC, i.e. not via the signal line as in the previous case.

The difference in potential between devices 1 and 2 becomes very low and the disturbance acceptable.

***Fig. Q21** : Counter-measures of common-mode impedance coupling*

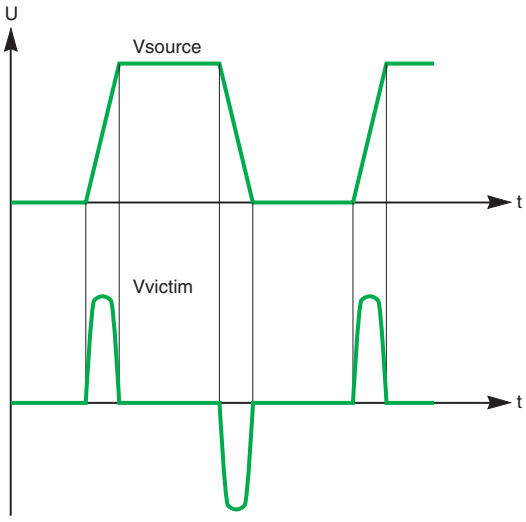

***Fig. Q22** : Typical result of capacitive coupling (capacitive cross-talk)*

4.3 Capacitive coupling

Definition

The level of disturbance depends on the voltage variations (dv/dt) and the value of the coupling capacitance between the disturber and the victim.

Capacitive coupling increases with:

- The frequency
- The proximity of the disturber to the victim and the length of the parallel cables
- The height of the cables with respect to a ground referencing plane
- The input impedance of the victim circuit (circuits with a high input impedance are more vulnerable)
- The insulation of the victim cable (ε_r of the cable insulation), particularly for tightly coupled pairs

Figure Q22 shows the results of capacitive coupling (cross-talk) between two cables.

Examples (see **Fig. Q23** opposite page)

- Nearby cables subjected to rapid voltage variations (dv/dt)
- Start-up of fluorescent lamps
- High-voltage switch-mode power supplies (photocopy machines, etc.)
- Coupling capacitance between the primary and secondary windings of transformers
- Cross-talk between cables

4 Coupling mechanisms and counter-measures

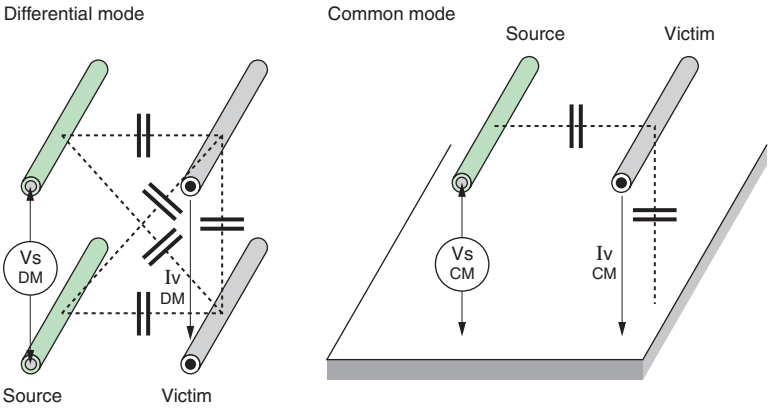

Vs DM: Source of the disturbing voltage (differential mode)
Iv DM: Disturbing current on victim side (differential mode)
Vs CM: Source of the disturbing voltage (common mode)
Iv CM: Disturbing current on victim side (common mode)

Fig. Q23 : Example of capacitive coupling

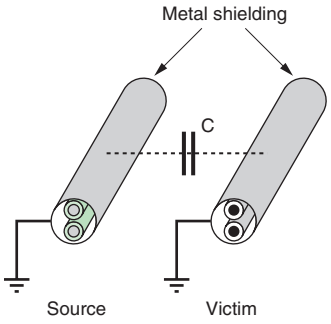

Fig. Q24 : Cable shielding with perforations reduces capacitive coupling

Counter-measures (see **Fig. Q24**)

- Limit the length of parallel runs of disturbers and victims to the strict minimum
- Increase the distance between the disturber and the victim
- For two-wire connections, run the two wires as close together as possible
- Position a PEC bonded at both ends and between the disturber and the victim
- Use two or four-wire cables rather than individual conductors
- Use symmetrical transmission systems on correctly implemented, symmetrical wiring systems
- Shield the disturbing cables, the victim cables or both (the shielding must be bonded)
- Reduce the dv/dt of the disturber by increasing the signal rise time where possible

4.4 Inductive coupling

Definition

The disturber and the victim are coupled by a magnetic field. The level of disturbance depends on the current variations (di/dt) and the mutual coupling inductance.

Inductive coupling increases with:

- The frequency
- The proximity of the disturber to the victim and the length of the parallel cables,
- The height of the cables with respect to a ground referencing plane,
- The load impedance of the disturbing circuit.

Examples (see **Fig. Q25** next page)

- Nearby cables subjected to rapid current variations (di/dt)
- Short-circuits
- Fault currents
- Lightning strikes
- Stator control systems
- Welding machines
- Inductors

4 Coupling mechanisms and counter-measures

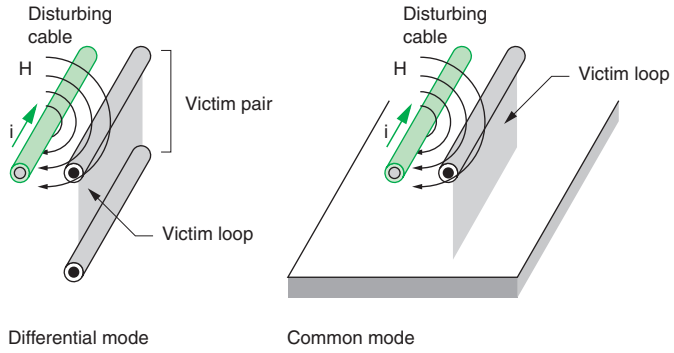

Fig. Q25 : Example of inductive coupling

Counter-measures

- Limit the length of parallel runs of disturbers and victims to the strict minimum
- Increase the distance between the disturber and the victim
- For two-wire connections, run the two wires as close together as possible
- Use multi-core or touching single-core cables, preferably in a triangular layout
- Position a PEC bonded at both ends and between the disturber and the victim
- Use symmetrical transmission systems on correctly implemented, symmetrical wiring systems
- Shield the disturbing cables, the victim cables or both (the shielding must be bonded)
- Reduce the dv/dt of the disturber by increasing the signal rise time where possible (series-connected resistors or PTC resistors on the disturbing cable, ferrite rings on the disturbing and/or victim cable)

4.5 Radiated coupling

Definition

The disturber and the victim are coupled by a medium (e.g. air). The level of disturbance depends on the power of the radiating source and the effectiveness of the emitting and receiving antenna. An electromagnetic field comprises both an electrical field and a magnetic field. The two fields are correlated. It is possible to analyse separately the electrical and magnetic components.

The electrical field (E field) and the magnetic field (H field) are coupled in wiring systems via the wires and loops (see **Fig. Q26**).

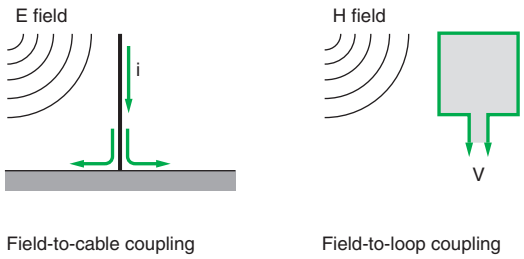

Fig. Q26 : Definition of radiated coupling

4 Coupling mechanisms and counter-measures

When a cable is subjected to a variable electrical field, a current is generated in the cable. This phenomenon is called field-to-cable coupling.

Similarly, when a variable magnetic field flows through a loop, it creates a counter electromotive force that produces a voltage between the two ends of the loop. This phenomenon is called field-to-loop coupling.

Examples (see **Fig. Q27**)

- Radio-transmission equipment (walkie-talkies, radio and TV transmitters, mobile services)
- Radar
- Automobile ignition systems
- Arc-welding machines
- Induction furnaces
- Power switching systems
- Electrostatic discharges (ESD)
- Lighting

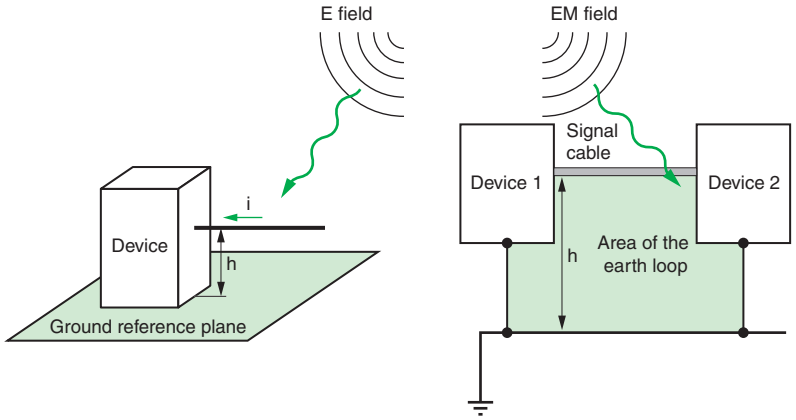

Example of field-to-cable coupling

Example of field-to-loop coupling

Fig. Q27 : Examples of radiated coupling

Counter-measures

To minimise the effects of radiated coupling, the measures below are required.

For field-to-cable coupling

- Reduce the antenna effect of the victim by reducing the height (h) of the cable with respect to the ground referencing plane
- Place the cable in an uninterrupted, bonded metal cableway (tube, trunking, cable tray)
- Use shielded cables that are correctly installed and bonded
- Add PECs
- Place filters or ferrite rings on the victim cable

For field-to-loop coupling

- Reduce the surface of the victim loop by reducing the height (h) and the length of the cable. Use the solutions for field-to-cable coupling. Use the Faraday cage principle.

Radiated coupling can be eliminated using the Faraday cage principle. A possible solution is a shielded cable with both ends of the shielding connected to the metal case of the device. The exposed conductive parts must be bonded to enhance effectiveness at high frequencies.

Radiated coupling decreases with the distance and when symmetrical transmission links are used.

5 Wiring recommendations

5.1 Signal classes (see **Fig. Q28**)

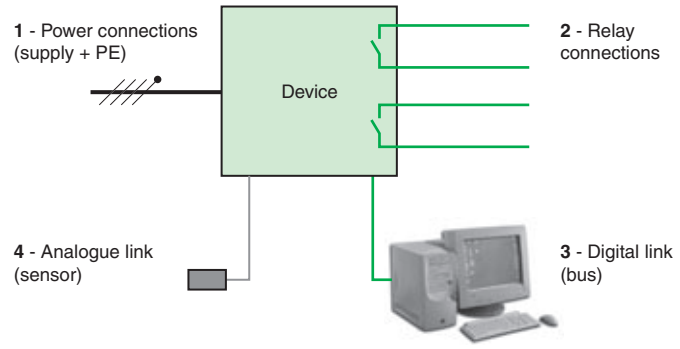

Fig. Q28 : Internal signals can be grouped in four classes

Four classes of internal signals are:

■ Class 1
Mains power lines, power circuits with a high di/dt, switch-mode converters, power-regulation control devices.
This class is not very sensitive, but disturbs the other classes (particularly in common mode).

■ Class 2
Relay contacts.
This class is not very sensitive, but disturbs the other classes (switching, arcs when contacts open).

■ Class 3
Digital circuits (HF switching).
This class is sensitive to pulses, but also disturbs the following class.

■ Class 4
Analogue input/output circuits (low-level measurements, active sensor supply circuits). This class is sensitive.

It is a good idea to use conductors with a specific colour for each class to facilitate identification and separate the classes. This is useful during design and troubleshooting.

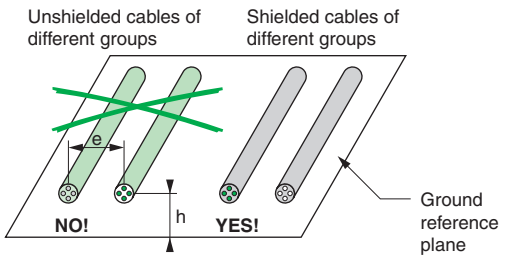

Risk of cross-talk in common mode if e < 3 h

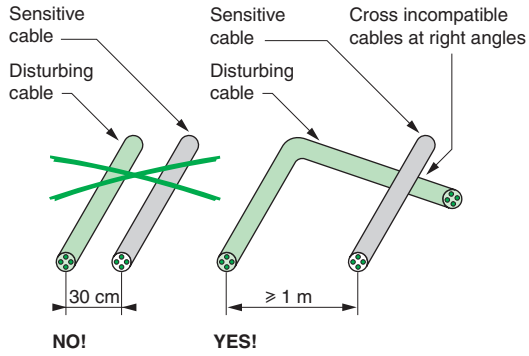

Fig. Q29 : Wiring recommendations for cables carrying different types of signals

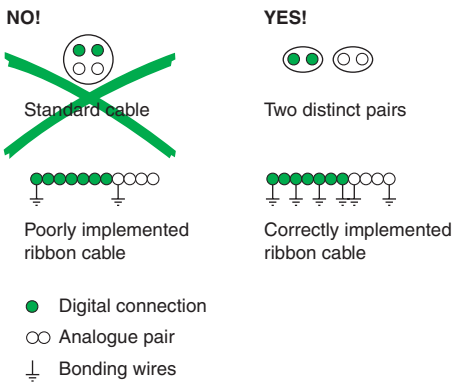

Fig. Q30 : Use of cables and ribbon cable

5.2 Wiring recommendations

Cables carrying different types of signals must be physically separated (see **Fig. Q29** above)

Disturbing cables (classes 1 and 2) must be placed at some distance from the sensitive cables (classes 3 and 4) (see Fig. Q29 and **Fig. Q30**)

In general, a 10 cm separation between cables laid flat on sheet metal is sufficient (for both common and differential modes). If there is enough space, a distance of 30 cm is preferable. If cables must be crossed, this should be done at right angles to avoid cross-talk (even if they touch). There are no distance requirements if the cables are separated by a metal partition that is equipotential with respect to the ECPs. However, the height of the partition must be greater than the diameter of the cables.

5 Wiring recommendations

A cable should carry the signals of a single group (see **Fig. Q31**)
If it is necessary to use a cable to carry the signals of different groups, internal shielding is necessary to limit cross-talk (differential mode). The shielding, preferably braided, must be bonded at each end for groups 1, 2 and 3.

It is advised to overshield disturbing and sensitive cables (see **Fig. Q32**)
The overshielding acts as a HF protection (common and differential modes) if it is bonded at each end using a circumferential connector, a collar or a clampere However, a simple bonding wire is not sufficient.

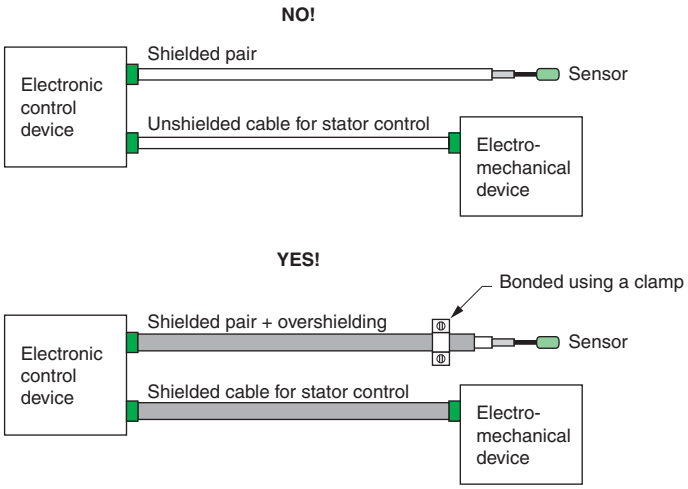

Fig. Q32 : Shielding and overshielding for disturbing and/or sensitive cables

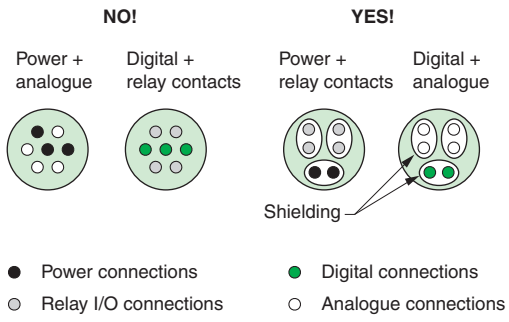

Fig. Q31 : Incompatible signals = different cables

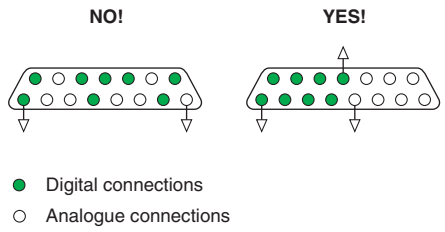

Fig. Q33 : Segregation applies to connectors as well!

Avoid using a single connector for different groups (see **Fig. Q33**)
Except where necessary for groups 1 and 2 (differential mode). If a single connector is used for both analogue and digital signals, the two groups must be separated by at least one set of contacts connected to 0 V used as a barrier.

All free conductors (reserve) must always be bonded at each end (see **Fig. Q34**)
For group 4, these connections are not advised for lines with very low voltage and frequency levels (risk of creating signal noise, by magnetic induction, at the transmission frequencies).

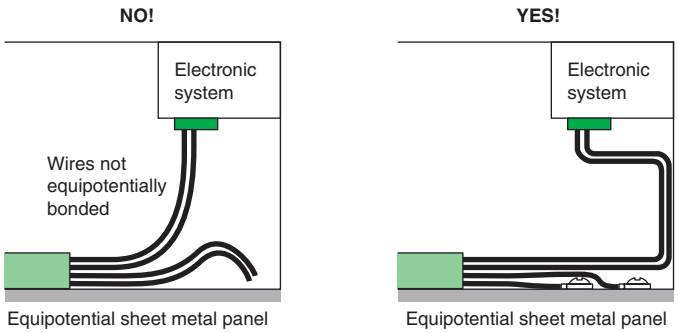

Fig. Q34 : Free wires must be equipotentially bonded

5 Wiring recommendations

The two conductors must be installed as close together as possible (see **Fig. Q35**)

This is particularly important for low-level sensors. Even for relay signals with a common, the active conductors should be accompanied by at least one common conductor per bundle. For analogue and digital signals, twisted pairs are a minimum requirement. A twisted pair (differential mode) guarantees that the two wires remain together along their entire length.

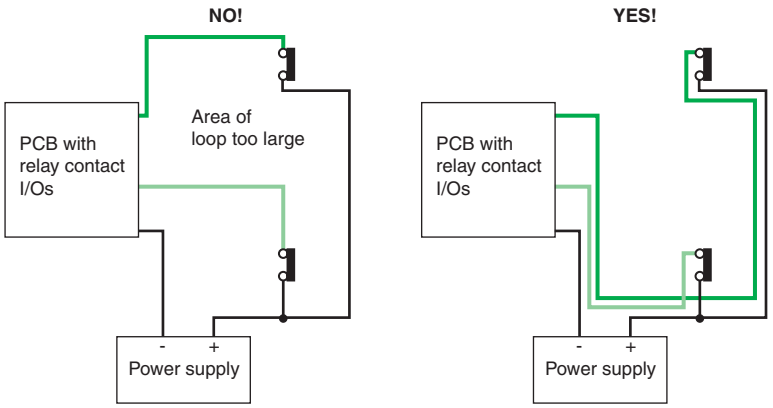

Fig. Q35 : The two wires of a pair must always be run close together

Group-1 cables do not need to be shielded if they are filtered

But they should be made of twisted pairs to ensure compliance with the previous section.

Cables must always be positioned along their entire length against the bonded metal parts of devices (see **Fig. Q36**)

For example: Covers, metal trunking, structure, etc. In order to take advantage of the dependable, inexpensive and significant reduction effect (common mode) and anti-cross-talk effect (differential mode).

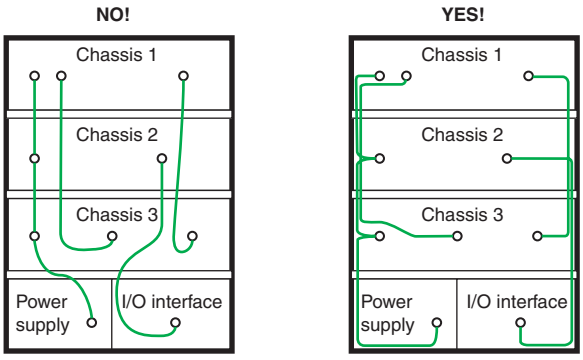

All metal parts (frame, structure, enclosures, etc.) are equipotential

Fig. Q36 : Run wires along their entire length against the bonded metal parts

The use of correctly bonded metal trunking considerably improves internal EMC (see **Fig. Q37**)

Q22

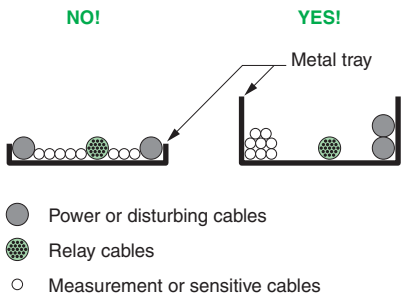

Fig. Q37 : Cable distribution in cable trays