Uniqueness adds values

Trihal

Cast Resin Dry Type Transformer

technical data

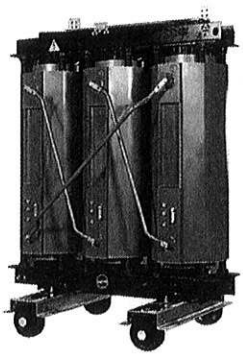

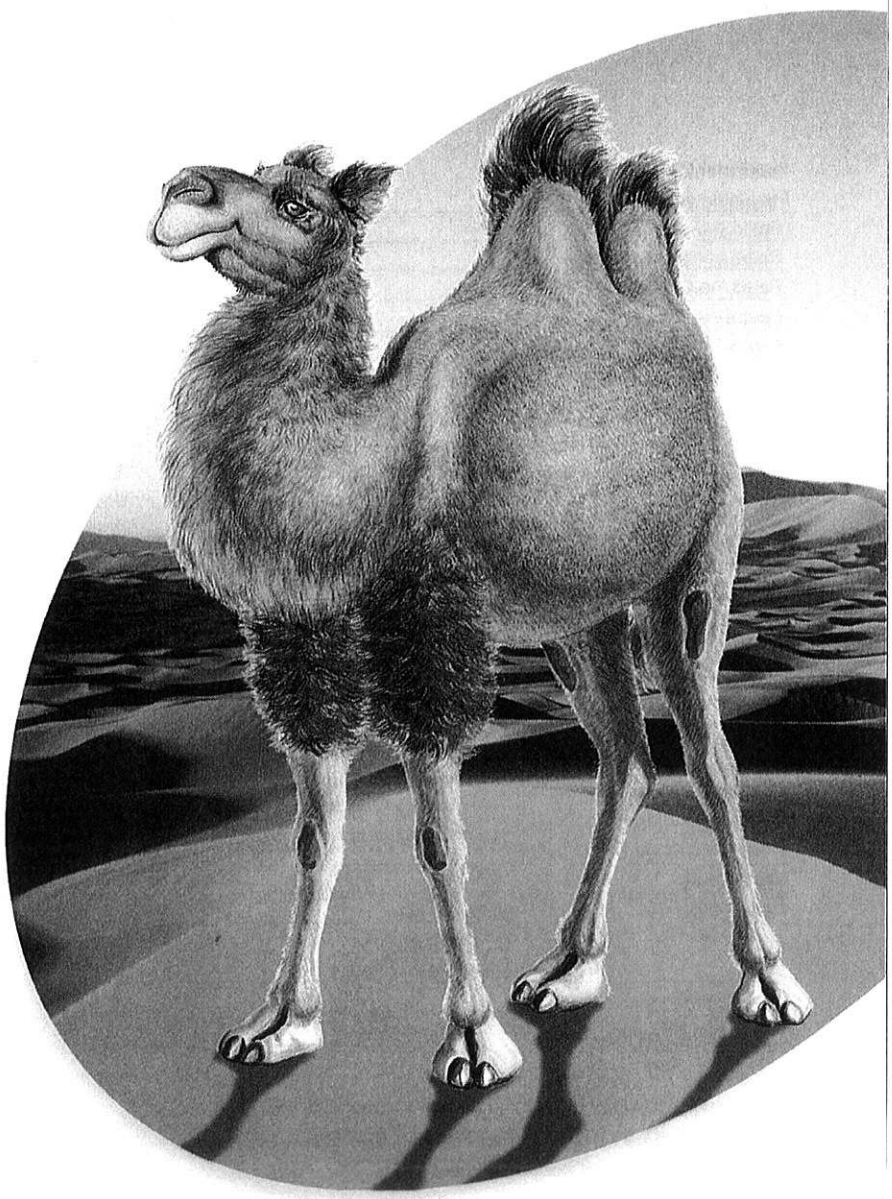

a brand of Schneider Electric

Merlin Gerin

HV/LV distribution transformers

Trihal cast resin dry type transformer 315 to 3150kVA
Insulation level≤24kV - low voltage 400, 415 or 433V - 50Hz
Thermal class F - ambient≤40°C, altitude≤1000m

standard

In accordance with standards:
- IEC60076-1 to 76-5;
- IEC600726
- CENELEC (European Committee for Electro-technical Standardization) harmonization document HD 398-1 to 398-5, HD 538-2 S1:1995, HD 464-S1:1988/A4:1995, concerning dry type transformers.

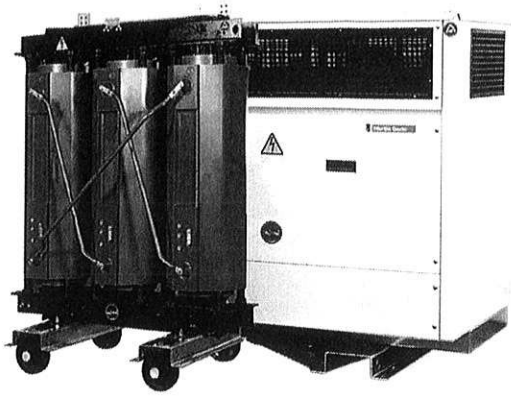

electrical characteristics

Insulation level: 7.2kV and 12kV

Rated power (kVA) (1)(*)		315(2)	400	500(2)	630	800	1000	1250	1600	2000	2500	3150
Rated primary voltage (1)		11, 12kV										
Rated insulation level (3)		7.2kV for 5.5 kV 12kV for 10kV										
Frequency (1)		50Hz										
Maximum ambient temperature		40°C										
Secondary voltage at no load (1)		400V / 415V / 433V between phases										
HV tapping range (off-circuit) (1)		±2×2.5%										
Vector group		Dyn11 or others										
Losses (W)	No-load losses	820	900	1100	1150	1350	1550	2000	2300	2700	3200	4000
	Load losses at 75°C	2750	3240	3860	4830	5760	6650	8040	9530	11100	13960	19000
	Load losses at 120°C	3150	3710	4420	5530	6600	7620	9210	10910	12710	15990	21760
Rated impedance voltage (%)		4	4	4	6	6	6	6	6	6	6	7
Noise level (4) dB(A)	Acoustic pressure Lpa at 1m	51	51	51	51	52	52	52	53	53	53	54

Insulation level: 17.5kV and 24kV

Rated power (kVA) (1)(*)		315(2)	400	500(2)	630	800	1000	1250	1600	2000	2500	3150
Rated primary voltage (1)		17.5, 24kV										
Rated insulation level (3)		17.5kV for 15kV-24kV for 20kV										
Frequency (1)		50 Hz										
Maximum ambient temperature		40°C										
Secondary voltage at no load (1)		400V / 415V / 433V between phases										
HV tapping range (off-circuit) (1)		±2×2.5%										
Vector group		Dyn11 or others										
Losses (W)	No-load losses	900	1000	1250	1350	1550	1800	2300	2600	3100	3700	4700
	Load losses at 75°C	3500	4000	4800	6000	7300	8500	10000	12500	15000	18000	21000
	Load losses at 120°C	4010	4580	5500	6870	8360	9730	11450	14310	17180	20610	24050
Rated impedance voltage (%)		4	4	4	6	6	6	6	6	6	6	7
Noise level (4) dB(A)	Acoustic pressure Lpa at 1m	51	51	51	51	52	52	52	53	53	53	54

(*) The rated power is defined by natural air cooling (AN). Should there be particular constraints, it may be increased by 40% by forced cooling addition (AF). Please consult us.
(1) Other possibilities upon request, consult us.
(2) Non standard ratings available on request.
(3) Reminder of Trihal insulation levels (see the right sheet)
(4) According to IEC 551

Trihal insulation level

Rated insulation level (kV)	7.2	12	17.5	24
kV r.m.s. 50Hz-1mn	20	35	50	50
kV B.I.L. 1.2/50 µs	75	95	125	150

HV/LV distribution transformers

Trihal cast resin dry type transformer 315 to 3150kVA
Insulation level≤24kV - low voltage 400, 415 or 433V - 50Hz
Thermal class F - ambient≤40°C, altitude≤1000m

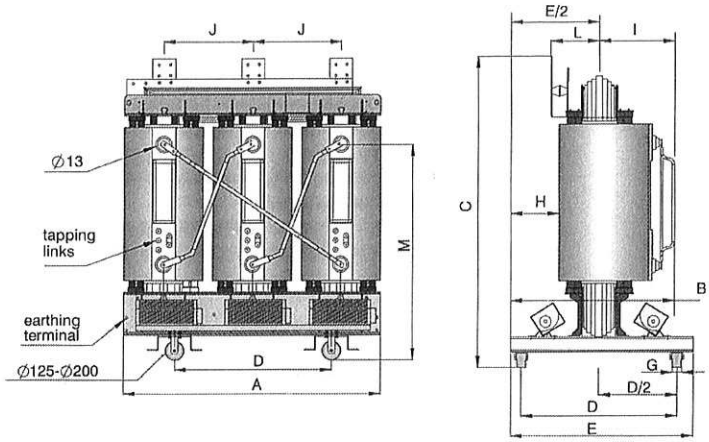

dimensions and weights
Without enclosure housing (IP00)

Dimensions and weights indicated in the table below are provided as an example for primary single voltage transformers 7.2kV to 24kV / 400, 415 or 433V.
They apply to transformers with electrical characteristics shown in the previous table.
For other voltages, impedance voltages and dual-voltages, weights and dimensions are different (consult us).

Insulation level: 7.2kV and 12kV - low voltage 400V / 415V / 433V

Rated power (kVA) (1)(*)		315	400	500	630	800	1000	1250	1600	2000	2500	3150
Dimensions (mm)	A	1185	1275	1255	1345	1535	1570	1560	1720	1790	1970	2065
	B	795	795	795	805	945	945	945	945	1195	1195	1195
	C	1454	1479	1674	1554	1604	1789	2009	2034	2284	2349	2416
	D	660	660	660	660	820	820	820	820	1070	1070	1070
	E	795	795	795	795	945	945	945	945	1195	1195	1195
	H	220	205	205	190	235	230	230	205	320	290	270
	I	380	395	395	410	440	455	455	480	480	520	535
	J	395	425	417	448	511	522	519	572	572	655	688
	L	187	201	193	205	224	228	228	246	250	314	316
	M	983	993	1193	1073	1103	1243	1423	1433	1623	1663	1715
	LV terminals	a	a	b	b	b	c	d	d	e	f	f
Weights (kg)		1450	1810	1970	2160	2810	3270	3710	4720	5860	7270	7730

Insulation level: 17.5kV and 24kV - low voltage 400V / 415V / 433V

Rated power (kVA) (1)(*)		315	400	500	630	800	1000	1250	1600	2000	2500	3150
Dimensions (mm)	A Length	1295	1380	1355	1420	1585	1660	1700	1825	1985	2055	2185
	B	795	805	800	810	945	945	945	955	1195	1195	1195
	C Height	1511	1536	1731	1756	1796	2001	2091	2126	2211	2436	2513
	D	660	660	660	660	820	820	820	820	1070	1070	1070
	E width	795	795	795	795	945	945	945	945	1195	1195	1195
	H	210	195	200	185	235	220	215	195	290	280	260
	I	390	405	400	415	440	455	460	480	505	530	550
	J	431	460	451	473	528	553	566	608	661	684	728
	L	203	211	205	213	233	242	249	268	278	317	320
	M	1024	1034	1234	1254	1274	1434	1474	1494	1524	1714	1766
	LV terminals	a	a	b	b	b	c	d	d	e	f	f
Weights (kg)		1420	1700	1900	2220	2850	3680	3950	5150	6050	7600	8350

HV/LV distribution transformers

Trihal cast resin dry type transformer 315 to 3150kVA
Insulation level≤24kV-low voltage 400, 415 or 433V - 50Hz
Thermal class F - ambient≤40°C, altitude≤1000m

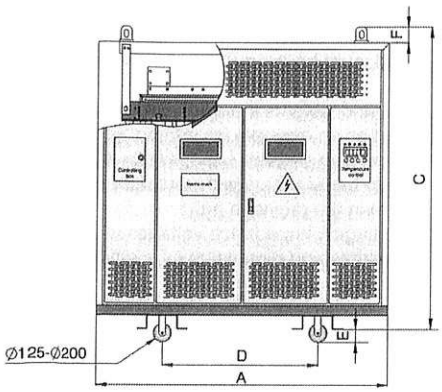

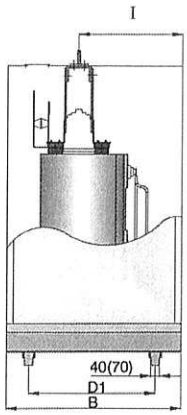

dimensions and weights
With enclosure housing (IP31)

Dimensions and weights indicated in the table below are provided as an example for primary single voltage transformers 7.2kV to 24kV / 400, 415 or 433V.
They apply to transformers with electrical characteristics shown in the previous table.
For other voltages, impedance voltages and dual-voltages, weights and dimensions are different (consult us).

In brackets, dimension only for 3150 kVA.

Insulation level: 7.2kV and 12kV - low voltage 400V / 415V / 433V

Rated power (kVA) (*)		315	400	500	630	800	1000	1250	1600	2000	2500	3150
Dimensions (mm)	A	1800	1800	1800	1800	2100	2100	2200	2200	2400	2600	2600
	B	1300	1300	1300	1300	1400	1400	1400	1400	1500	1500	1500
	C	1780	1780	2080	2080	2180	2180	2400	2400	2750	2750	2750
	E	80	80	80	80	80	80	100	100	100	100	140
	F	100	100	100	100	100	100	100	100	150	150	150
	LV terminals	a	a	b	b	b	c	d	d	e	f	f
Weights (kg)		1750	2110	2290	2560	3190	3650	4110	5150	6340	7790	8250

Insulation level: 17.5kV and 24kV - low voltage 400V / 415V / 433V

Rated power (kVA) (*)		315	400	500	630	800	1000	1250	1600	2000	2500	3150
Dimensions (mm)	A Length	2000	2000	2100	2100	2100	2400	2400	2400	2500	2700	2700
	B Width	1400	1400	1500	1500	1500	1600	1600	1600	1700	1700	1700
	C Height	1880	1880	2080	2080	2080	2400	2400	2400	2550	2750	2750
	E	80	80	80	80	80	100	100	100	100	100	140
	F	100	100	100	100	100	100	100	100	150	150	150
	LV terminals	a	a	b	b	b	c	d	d	e	f	f
Weights (kg)		1760	2040	2290	2610	3240	4150	4420	5620	6560	8160	8910

terminals

HV terminals

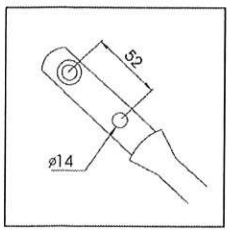

LV terminals

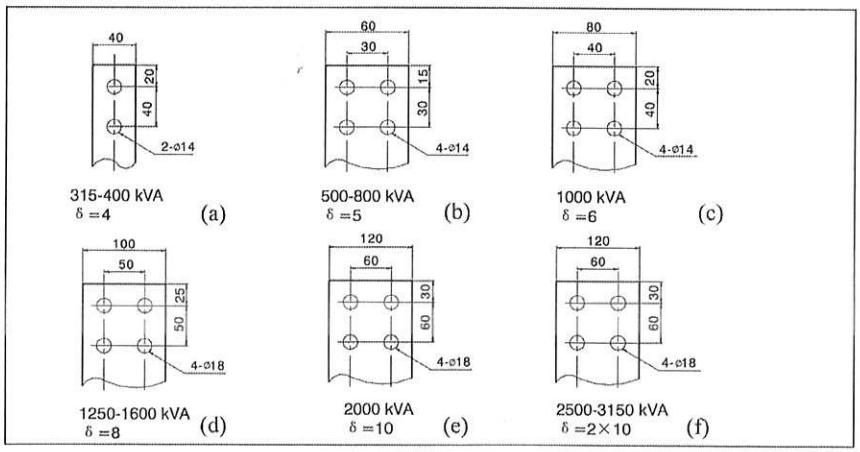

Due to the evolution of standard and materials, the present document will bind us only after confirmation from our technical department