GMA
up to 24 kV

Gas-insulated switchgear
for primary distribution
- as single and double
busbar system



System configuration

AREVA T&D

AREVA

Delivery conditions
The General Conditions of Delivery as amended shall apply.

Illustrations
The illustrations are not binding.

Table of contents

INTRODUCTION
- Characteristics 4
- GMA Circuit-breaker Functional unit 1250 A 6
- Performance characteristics 6

STANDARDS
- Regulations, provisions and standards 7
- Applied standards 8
- Operator safety and classification 9
- Internal faults 10
- Internal arc classification 11
- Installation of switchgear units with IAC qualification 12
- Type designation 13
- Function codes 13

MECHANICAL DESIGN
- GMA functional units 15
- Circuit-breaker functional unit CB 16
- Switch disconnector functional unit C 18
- Switch fuse combination T1 19
- Function overview with dimensions and weights 20
- Range of equipment with options 22
- Functional units 450 mm, up to 630 A 22
- Functional units 600 mm, up to 1250 A 24
- Bus sectionalizer, bus couplers and metering panels 26
- Straightforward operation via functional intuitive operator interface 27
- Mechanical operator interfaces 28
- Gas compartment monitoring, pressure monitoring with pressure gauge, pressure relief device 29
- Voltage detection system and phase coincidence 32
- Switchgear control system IMOS, central screen 33
- Low-voltage cabinet 34
- Current transformers, voltage transformers, current and voltage transformers in the functional unit 35
- Standardized transformer data, toroidal-core current transformer, voltage transformer 36
- Billing metering, air-insulated metering panel, instrument transformer in acc. with DIN 42600, slim design, transformer for billing metering, transformer in outgoing feeder block 37

METERING PANEL
- Metering panel (air-insulated) 38

ELECTRICAL SUPPLEMENTARY MODULES
- Drive motors, releases and blocking magnets 40
- Admissible numbers of breaking operations 41

SELECTION TABLES
- GMA with circuit-breaker functional unit CB 42
- GMA with switch disconnector functional unit C 44
- GMA with switch fuse combination T1 46

CABLE CONNECTION SYSTEMS
- Cable connections 48
- 12 kV mains outgoing feeder cable, single connection 50
- 12 kV mains outgoing feeder cable, multiple connection 51
- 24 kV mains outgoing feeder cable, single connection 52
- 24 kV mains outgoing feeder cable, multiple connection 53
- Selection tables for cable fittings T1 54
- Main dimensions, cable connection 55

H.V.H.R.C. FUSE LINKS
- Selection of H.V.H.R.C. fuse links 56
- Selection table for H.V.H.R.C. backup fuse with integrated thermal cut-out 57
- Selection of H.V.H.R.C. fuse links 59
- Backup fuses 59
- General-purpose fuses 59

ENVIRONMENTALLY COMPATIBLE DESIGN 60

DESIGN DATA
- Main dimensions 61
- Panel depths 62
- Space requirements 63
- Ceiling ducts and arrangement of spacer bars for installation 66
- Pressure relief versions 67

GMA DOUBLE BUSBAR SWITCHGEAR
- Characteristics 69
- Double-busbar switchgear units up to 1250 A, busbar 1 and busbar 2 in back-to-back arrangement 70
- Mechanical operator interfaces, double busbar switchgear units - example circuit-breaker panel, example incoming feeder / bus coupler combination 71
- Example bus section coupler 72
- Space requirement in case of double busbar switchgear 73
- Pressure relief, version in case of double busbar switchgear GMA 73
- Ceiling ducts and spacer bars for installation in case of double busbar switchgear 74

SHIPPING INFORMATION
- Transport of switchgear, delivery, packaging 75

Introduction

FEATURES

GMA - a future-oriented switchgear type

GMA switchgear units with
> rated voltages up to 24 kV
> rated currents up to 1250 A
> rated peak withstand currents up to 63 kA
> rated short-time currents up to 25 kA 3s,
are primarily used as gas-insulated single and double busbar systems for application in
- transformer and switching stations of power supply companies
- infrastructure, e.g. buildings
- government authorities
- industry
- open-cast lignite mining
- mining
- ships and offshore plants
- block-type thermal power stations
- standby power supply installations
- water treatment plants.

GMA satisfies maximum requirements regarding
- operating reliability
- operator safety
- availability
- environmental compatibility.

The compact design with extremely small dimensions is very advantageous for
> prefabricated concrete stations
> in cramped spaces as replacement for old switchgear
> container stations.

Main features

- no gas work on site during installation
- no replenishing of insulating gas during the service life
- compact design
- time-saving installation and cable assembly
- independence of environmental influences of the hermetically enclosed switchgear section
- intuitive operator guidance
- long service life and low maintenance.

Environmentally compatible design

The switchgear GMA satisfies to a high degree the ecological requirements in view of environmental protection:
- optimization of material and energy consumption during manufacture
- compliance with all ecological requirements during the switchgear's service life
- the use of recyclable materials for efficient recycling at the end of its service life
- small footprint
- a product designed for a long service life of up to 40 years

The use of recyclable materials for efficient re-use and disposal at the end of the service life is supported by a recycling data sheet.

Once the switchgear's service life has elapsed, the SF_6 gas can be extracted completely via a recovery valve provided as standard in each gas-filled compartment, and then recycled. No special tools specifically designed for extraction are required to this effect.

During normal operation, the gas need not be replenished during the entire service life of the switchgear (sealed pressure system).

Operator safety

> Maximum protection against accidental contact due to complete metal enclosure of all switchgear components
> Optimum safety of operation due to a complete interlokking system
> Successfully type-tested in accordance with IEC 62271-200, Internal Arc Classification (IAC), 25 kA 1s.
> With voltage detection system for checking for zero voltage and phase coincidence.

Operating reliability

> All the active medium-voltage components such as main switching devices, inside busbar connections and the top busbar connections between the individual modules are located in hermetically enclosed, gas-filled compartments and are thus insensitive to
- aggressive atmosphere
- dirt
- dust
- vermin.
> Inert insulating gas provides protection against a fire in the station and prevents contact oxidation
> Cable connection and H.V.H.R.C. fuse compartments are included systematically into the interlocking design

User-friendly

> Clearly arranged and compact
> Visually highlighted control panel for mechanical operation and mechanical switch position signalling on the switchgear panel
> Ergonomic operability
> Logical operation
> Intuitive operator guidance for mechanical operation of the panel
> Operation similar to air-insulated switchgear

Economical

> Very reduced space and surface area requirements
> Complete systems ready for connection - "off the crane-hook"
> Universal fitting options and modular design enable an optimum switchgear configuration
> Extremely short assembly times on site thanks to the in-line modular design
> Modest financial outlay as the system can be extended step by step due to the extension options offered for different conditions
> High number of mechanical and electrical operations due to the use of vacuum circuit-breakers

Reliable

> Even when filled to equilibrium, entire dielectric strength at 12 kV, 17.5 kV and 24 kV
> Few gas compartments and pressure relief devices thanks to the modular design
> Gas monitoring of the gas-filled compartment with temperature-compensated pressure gauge
> Very robust and reliable drive system
> Vacuum circuit-breaker

Expandable

> Extension via an appropriately designed switchgear possible on both sides (optional)
> No gas handling required in case of extension
> No replenishing of insulating gas during the switchgear's service life

Easy to assemble

> Extremely straightforward assembly and short assembly times thanks to the in-line modular design
> Low-voltage cabinet can be dismantled/remounted easily for transport
> Cable connection area designed amply and optimally accessible from the front

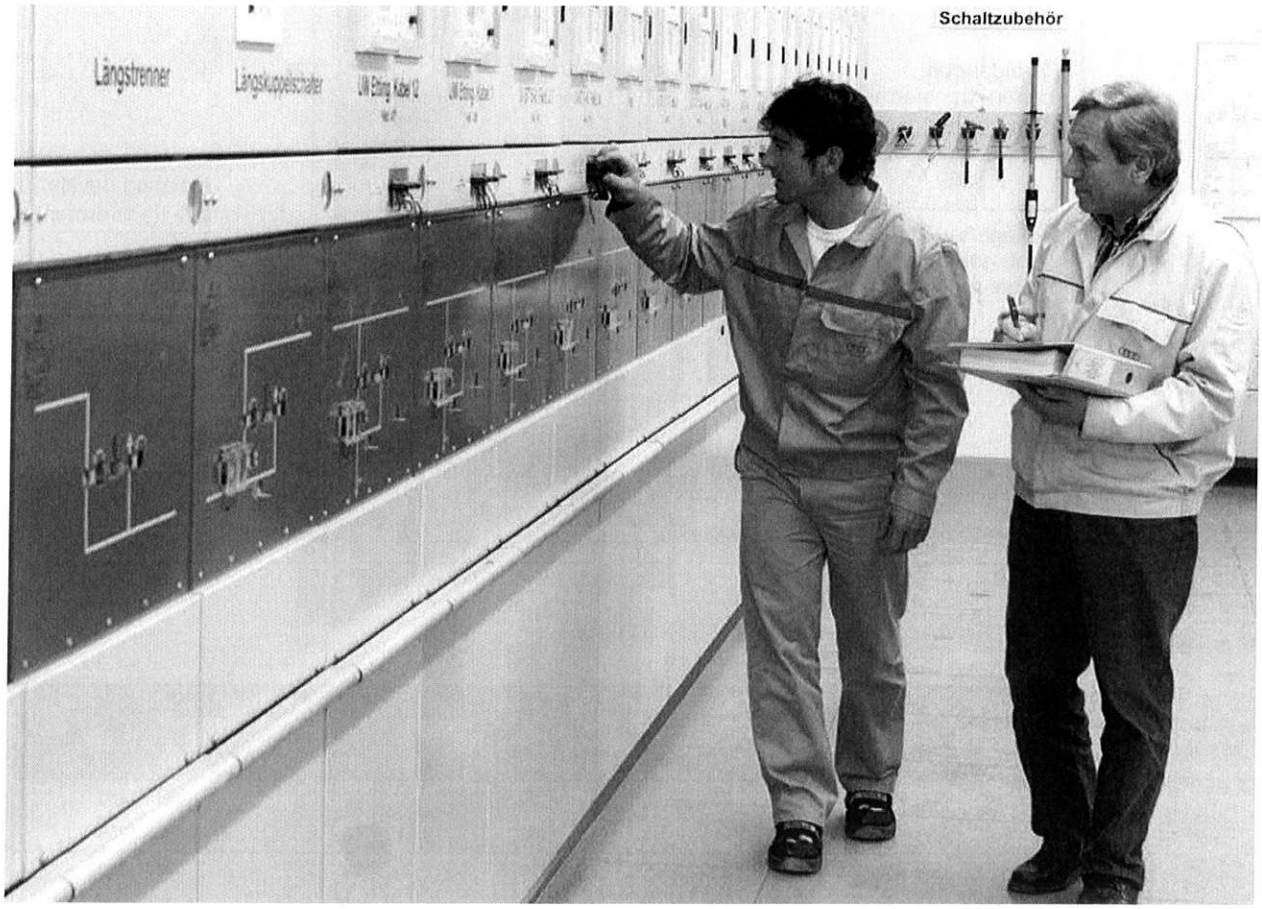

GMA switchgear

GMA CIRCUIT-BREAKER
FUNCTIONAL UNIT 1250 A

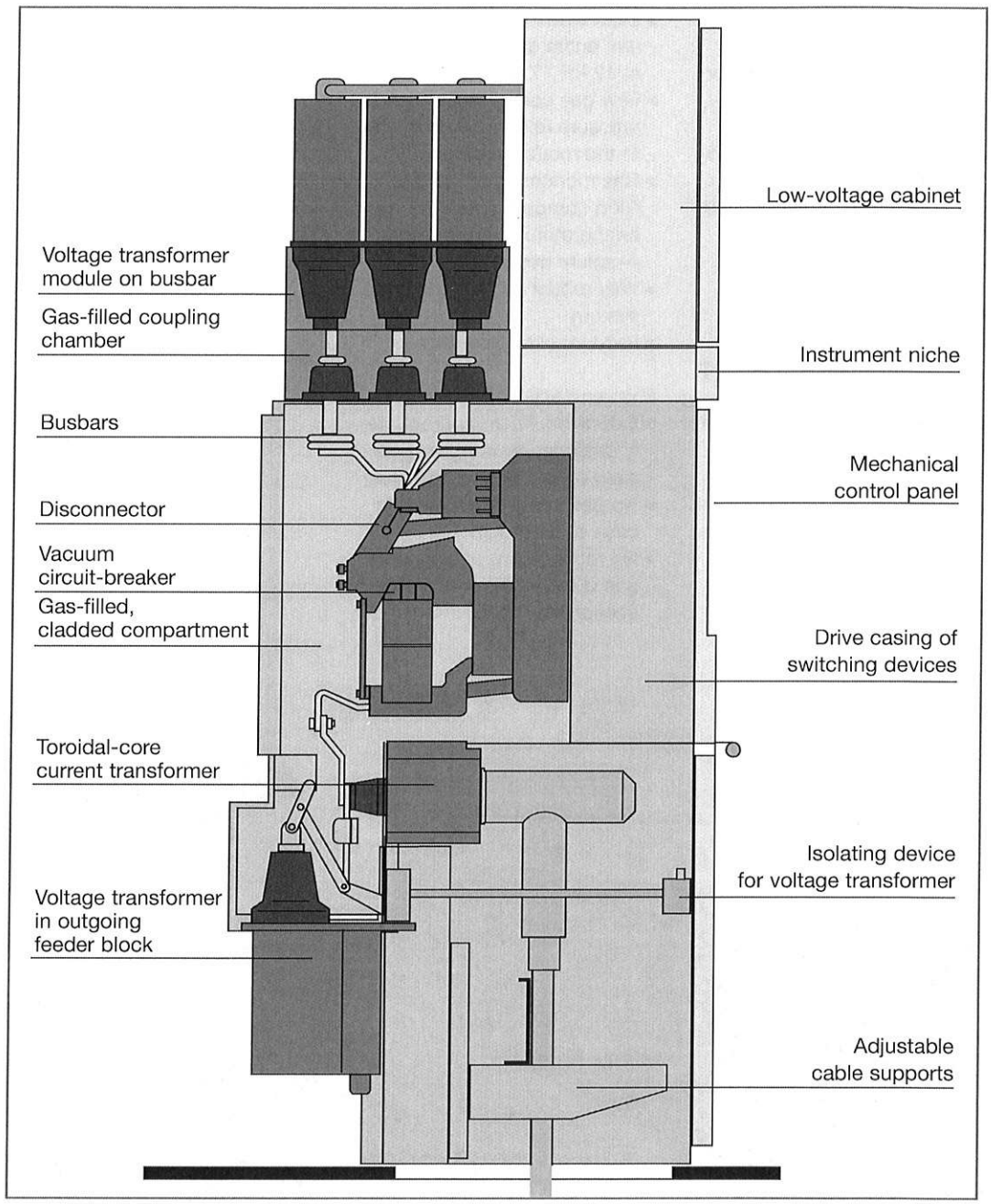

PERFORMANCE CHARACTERISTICS

Rated voltage [kV]	Rated lightning impulse withstand voltage [kV]	Rated short-time power frequency withstand voltage [kV]	Rated short-circuit making current [kA]	Rated short-circuit breaking current [kA]	Rated normal current [A]
12	75	28	50	20	630 - 1250
			63	25	630 - 1250
17,5	95	38	50	20	630 - 1250
			63	25	630 - 1250
24	125	50	40	16	630 - 1250
			63	25	630 - 1250

Standards

Regulations, provisions and standards

GMA switchgear units are
- metal enclosed
- SF_6 insulated
- prefabricated and type-tested
- successfully qualified via internal arc classification in acc. with IEC 62271-200

ENVIRONMENTAL AND OPERATING CONDITIONS

GMA switchgear units are to be operated under normal operating conditions according to the specifications EN 60694 or the IEC publication 60694 (new: IEC 62271-1).

Operation under conditions other than these is only admissible upon consultation with and with the consent of the manufacturer.

DEGREES OF PROTECTION AGAINST ACCIDENTAL CONTACT AND FOREIGN OBJECTS

Main electric circuits	IP 65
Drives	IP 2X, IP 5X (Option)
Low-voltage cabinet and cable connection compartment (Operator's side with cable compartment cover and side panels)	IP 3X, IP 5X (Option)

Ambient conditions		
Temperature class		"minus 5 indoors" [1]
Min./max. ambient temperature	°C	-5[1] / 40 [2]
Average value over 24 hours (max.)	°C	35 [3]
Maximum installation altitude above sea-level	m	1000 [4]
Insulating gas		
Type		Sulphur hexafluoride (SF_6)
Design pressure p_{re} at 20 °C	MPa	0.03
Relative leakage rate F_{rel}	%	< 0.1 p.a.

1) Optional: "minus 25 indoors"
2) Optional up to 55 °C in case of reduction of normal currents
3) Optional up to 40 °C in case of reduction of normal currents
4) Higher installation altitudes possible on request

APPLIED NORMS

GMA switchgear units meet the following standards and regulations:

Designation	IEC standard	IEC classes	EN standard
Switchgear	IEC 62271-200 IEC 60694 (new IEC 62271-1)	Category for operating availability: LSC 2A [1] Partition class (compartmentalization class): PM	EN 62271-200 EN 60694 (new EN 62271-1)
Internal arc classification	IEC 62271-200		EN 62271-200
Earthing switch	IEC 62271-102	E2	EN 62271-102
Disconnector	IEC 62271-102	M1	EN 62271-102
Multipurpose switch disconnector	IEC 60265-1	M1, E3	EN 60265-1
Switch fuse combination	IEC 62271-105	M1, E1	EN 62271-105
Circuit-breaker	IEC 62271-100	M2, E1, E2 [2], C1	EN 62271-100
Current transformer	IEC 60044-1		EN 60044-1
Inductive voltage transformers	IEC 60044-2		EN 60044-2
Outer cone-type appliance couplers			EN 50181
Protection against accidental contact, foreign bodies and water	IEC 60529		EN 60529
Erection			HD 637 S1
Operation of electrical equipment			EN 50110

[1] Applies to cable connection compartments and access for H.V.H.R.C. fuse links:
If the air-insulated metering panels are used, the loss of service continuity category may be restricted, depending on the entire switchgear configuration, to below LSC 2A.
However, if the air-insulated metering panel can be isolated to the left or right (operation of switchgear section on the left and right can be continued under voltage), the operating availability with LSC 2A is guaranteed for the entire switchgear.

[2] Depending on the required switching sequence.

OPERATOR SAFETY AND CLASSIFICATION

The loss of service continuity category in IEC 62271-200 and EN 62271-200 refers to the classification of the switchgear functions in conjunction with the uninterruptible power supply during access to one of the switchgear compartments. The above-mentioned standards contain definitions of certain loss of service continuity categories of the switchgear during access to a compartment. Such access may be necessary, e.g. in case of inspection or maintenance work, or for work in general.

All gas-filled compartments of the switchgear GMA are inaccessible compartments in accordance with section 8.2.2 of IEC/EN 62271-200. Access for the user is not provided and opening would destroy the integrity of the gas-filled compartments. However, in case of the GMA, the cable connection compartment must be accessible for cable testing and/or the connection compartment for the high-voltage fuse links, to enable replacement of these links.

The classification features of the above-mentioned air-insulated compartments of the GMA series comprise:

Types of compartments in view of accessibility		Characteristics
Compartments accessible to operators	Compartment accessible via interlock control	Opening does not require any tools - interlock only permits access if high-voltage components have been earthed in zero-voltage condition
	Compartment accessible depending on process	Opening does not require any tools - interlock facilities must be combined with the operator's work instructions to enable access only if high-voltage components are earthed and completely isolated from the power supply (zero voltage)

Switchgear loss of service continuity categories on opening accessible compartments		Characteristics
LSC2	LSC2A	Busbars and other switchgear panels may be energized

Switchgear categories as regards the type of partition between energized components and an opened, accessible compartment	Characteristics
PM	Metallic partitions between energized components and the opened compartment (maintaining the metal-enclosed condition)

The air-insulated cable connection compartments and connection compartments of the GMA switchgear feature loss of service continuity category LSC2A-PM. LSC2A means: In case of access to the air-insulated compartment of a switchgear panel, the busbars and other switchgear panels may continue operating. As the GMA series is a technology featuring fixed devices, the high-voltage cable in the outgoing feeder of the panel concerned must be de-energized and earthed. The busbars and other panels may remain energized.
The partitions of the air-insulated compartments of GMA are made of metal.

Qualification of switchgear regarding hazards in case of internal arcs during normal operation	Characteristics
IAC classification	The internal arc classification IAC refers to the effect of internal excess pressure on covers, doors, inspection glasses, vents etc. Moreover, thermal effects of the internal arc on the enclosure or its root on the enclosure and escaping hot gases and incandescent particles are taken into consideration. The successful IAC classification is to provide, in case of an internal arc, a verified operator safety level close to that of a switchgear under normal operating conditions.

INTERNAL FAULT CAUSING INTERNAL ARCS

The GMA switchgear has been designed for a very low probability of internal arcs during its entire service life.

IEC 62271-200 and EN 622721-200 point out that faults within the enclosure, e.g. due to damage, extraordinary operating conditions or operating errors, cannot be ruled out completely and may give rise to an internal arc. Thus, the switchgear must provide the operator with a very good degree of protection. Operator safety is achieved, in accordance with the switchgear standard, by reducing the hazard to a tolerable level.
In accordance with ISO / IEC Guideline 51, sect. 5 (Safety concept), the risk consists both of the probability of the occurrence and of the severity of the damage.

With the GMA switchgear, all imaginable and preventive measures in acc. with IEC 62271-200 and EN 62271-200 Table 2 – Locations of defects, causes and examples for measures reducing the probability of internal arcs - have been implemented ideally by design. This Table also lists explicitly the use of gas-filled compartments as an example for preventive measures to reduce the probability of internal arcs.

To ensure maximum protection of persons in case of an internal arc, the above-mentioned standard recommends further measures to limit the external consequences. These measures, e.g. pressure relief devices and all operations exclusively with the front closed, have been implemented systematically in the GMA switchgear series.

Planning engineers and operating companies alike can use, in accordance with IEC 62271-200 and EN 62271-200, the "Guideline for the selection of suitable switchgear as regards internal arcs":

> In case of a negligible risk: metal-enclosed switchgear with internal arc classification not required.
> In this context, it is especially important that in the case of gas-insulated switchgear, the risk of internal arc faults is extremely low by design.
> If the risk is considered as essential: only metal-enclosed switchgear with internal arc qualification IAC should be used.

In making this decision, planning engineers and operating companies should apply the procedure for selection of suitable switchgear in accordance with ISO / IEC Guide 51, sect. 6. This procedure implies that the operator must contribute to reducing the risk.

INTERNAL ARC CLASSIFICATION (IAC)

The internal arc classification IAC provides a verified level of operator safety in the immediate vicinity of the switchgear under normal operating conditions: The internal arc classification is an option in accordance with IEC 62271-200 and EN 62271-200. It refers to the effect of internal excess pressure on covers, doors, inspection glasses, vents etc. Moreover, the thermal effects of the internal arc and its root points on the enclosure and escaping hot gases or incandescent particles are taken into account. The GMA switchgear series is available in the design with internal arc classification IAC. In the IAC design, it has been designed for accessibility degree A, i.e. the place of installation of the GMA panels is an enclosed electrical operating area and only accessible to authorized staff.

The internal arc classification IAC for the GMA series refers to the following sides of the switchgear enclosure:

> for the front side (operator side)
> for the sides and
> for the rear side (optional).

The IAC qualification has been verified successfully for the GMA series

> up to 25 kA, arc duration 1 second:
  Qualification IAC AFL
  Internal arc 25 kA 1s.
> In case of accessibility from the rear, an internal arc classification with the following additional facilities is available for the rear side up to 25 kA, arc duration 1 second:
  Qualification IAC AFLR
  Internal arc 25 kA 1s.



GMA with circuit-breaker *GMA with switch disconnector*



GMA switchgear

Regarding the successful internal arc classification IAC, the following criteria have been complied with:

Criterion 1
Correctly secured doors and covers have not opened.

Criterion 2
Within the specified test duration, the enclosure has not been torn open and no parts have been hurled away.

Criterion 3
No holes have occurred in the accessible sides (front control panel and switchgear sides).

Criterion 4
The horizontal and vertical indicators have not been set alight due to the effect of the hot gas.

Criterion 5
The ground connection of the enclosure has remained effective.

INSTALLATION OF SWITCHGEAR UNITS WITH IAC QUALIFICATION

IEC 62271-200 / EN 62721-200 requests "minimum admissible conditions" for installation of switchgear with IAC qualification.
The standard implies the following specifications for IAC qualification testing:

> Minimum clearance 600 (±100) mm from the panel top to the ceiling.
An additional test with smaller clearances to the ceiling is admissible as supplementary test to obtain information on the installation conditions.

The total panel height of the GMA series with IAC qualification amounts to 2100 mm. The IAC qualification test has been performed successfully with the lowest ceiling height of 2.4 m. A special installation version with pressure relief device of the compartments exclusively directed downwards (into the double base / cable basement) was subjected to an additional IAC qualification up to 16 kA 1s.

> The side wall and the rear wall of the building must be at a clearance of (100±30) mm in each case to the sides or to the rear of the switchgear panels.
A smaller clearance can be selected in accordance with the standard if no permanent deformation encumbers or restricts the sides or rear wall of the housing.

The instructions and information regarding minimum room heights and wall clearances for the GMA switchgear series are contained in this System Configuration; compliance with these is mandatory for switchgear with IAC qualification. These are the "minimum admissible conditions" in accordance with the standard. Each installation condition which is not as strict and / or provides for more space, in accordance with IEC 62271-200 / EN 62271-200, is viewed as having been covered by the IAC qualification test.

TYPE DESIGNATION

The designation of the type-tested GMA switchgear unit informs about its design, rated short-time current, rated voltage and components fitted.

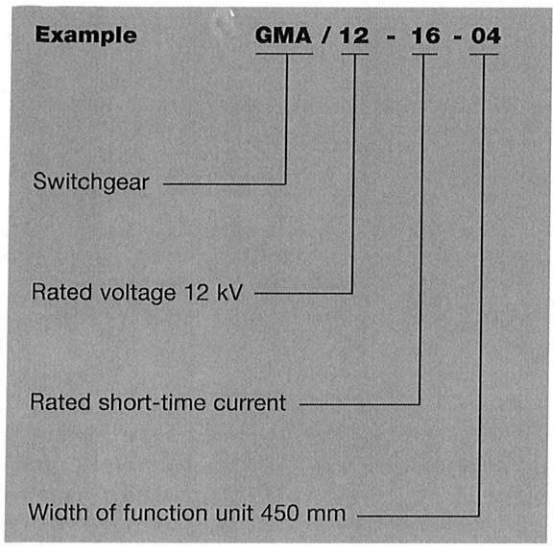

FUNCTION CODES

Type	Function of feeder
CB	Circuit Breaker feeder
T1	Transformer feeder
C	Cable feeder
R	Riser feeder
E	Earthing switch
SD	Switch Disconnector
D	Disconnector function
M	Metering feeder or metering function
BC-CB	Bus Coupler with Circuit Breaker
BS-SD	Bus Sectionalizer with Switch-Disconnector
BB-VT	Bus Bar - Voltage Transformer
BB-VTS	Bus Bar - Voltage Transformer with Switch device
BB-Con	Bus Bar - Connection
.../...	Combination of two feeders, directly and firmly connected
6	630 A
8	800 A
10	1000 A
12	1250 A

Mechanical Design

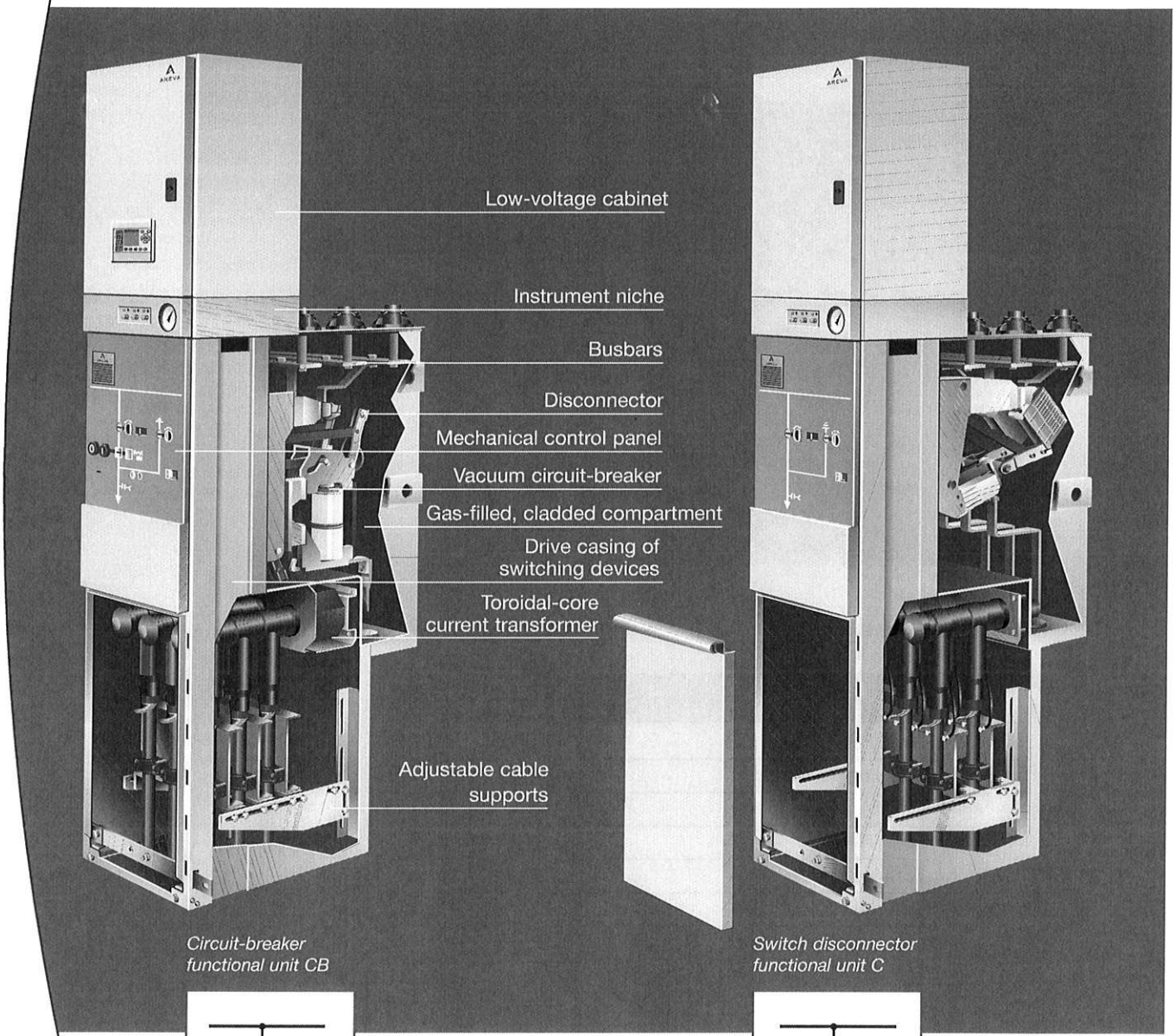

Circuit-breaker functional unit CB

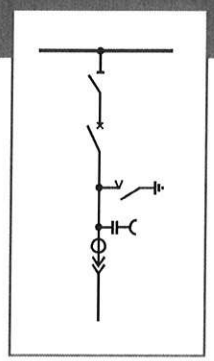

Switch disconnector functional unit C

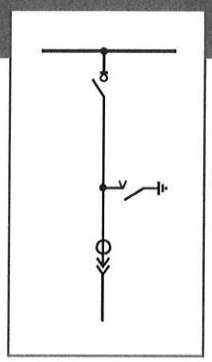

GMA FUNCTIONAL UNITS

GMA - a future-oriented switchgear type

The GMA series is a gas-insulated switchtgear of line-up modular design. The switching units have been installed in the gas-filled compartment of the modules. A module can be fitted with 1 to 4 functional units. The order of the functional units is defined object-specifically within a multiple module. The individual routine-tested modules are lined up without gas handling. The lining up of modules is effected via coupling chambers which, once assembled on the construction site, are an integral part of the gas-filled switchgear compartments. The top mounted busbars are integrated systematically into the hermetically gas-filled enclosure of the GMA switchgear - within the modules as well as between the modules.

In the GMA, bushings from the gas-filled compartment into the air atmosphere are used exclusively for cable connection and flanging-on the metal-enclosed voltage transformers.

The amount of assembly work required on site is extremely small thanks to the GMA's modular design. It enables a multitude of activities to be performed at the manfacturer's factory and not on the construction site. Assembly on site is mainly limited to the interface between adjacent modules and thus reduces assembly time considerably.

Functional units

The basic functional units

- > circuit-breaker outgoing feeder
- > switch disconnector outgoing feeder
- > switch fuse combination

are completed with

- > busbar voltage transformers
- > gas- and air-insulated functional units for billing metering
- > bus section coupler and busbar riser functional units and further system modules.

All conductors of the three-pole switching devices in the functional units are arranged side by side and on the front. At the same time, very simple and robust power transmission with short distances from the drives to the switch poles has been implemented.

GMA modular design

Modules comprising

- > 450 mm functional units:
  A GMA module can be equipped with 1 to 4 functional units
  - circuit-breaker outgoing feeder
  - switch disconnector outgoing feeder.

  The order of these functional units is defined project-specifically within a switchgear system.
- > 600 mm functional units:
  Within a multiple module with 600 mm functional units, circuit-breakers with various rating currents can be combined.
  A GMA module can be equipped with 1 to 3 of the following 600 mm wide functional units:
  - 630 A circuit-breaker outgoing feeder
  - 800 A circuit-breaker outgoing feeder
  - 1000 A circuit-breaker outgoing feeder

  or
  - 1250 A circuit-breaker outgoing feeder

  Individual modules can be completed by flanged-on outgoing voltage transformers. With outgoing voltage transformers, module widths of 600 mm are always used.
- > Supplementary modules, such as switch fuse combinations, are available as 1- or 2-module functional units with a width of 450 mm.

DESCRIPTION OF THE FUNCTIONAL UNITS

Circuit-breaker functional unit CB

Special features

> Three-pole vacuum circuit-breaker including:
- maintenance-free vacuum switch poles
- a common gas-tight rotary bushing for all three switch poles
- separate contact pressure springs for each switch pole

> Three-pole busbar isolator
- conventional isolating distance not bridged by insulating material

> Three-pole outgoing earthing switch
- earthing switch with making capacity
- conventional outgoing earthing with a separate switching device
- earthing directly on the outgoing feeder cable without interposing additional switching devices
- optionally with interlock via IVIS-F; in case voltage is present, the earthing switch cannot be switched ON

> Current transformers

Toroidal-core current transformers outside of the gas-filled compartment
- retrofitting and replacement without interference in the gas compartment possible from the front

> Option: outgoing voltage transformer
- contact-proof, earthed single-pole voltage transformers in conformity with the system
- directly flanged on the outgoing feeder with isolating and earthing device (module width 600 mm)
- connection via pluggable cable links (module width 450 mm)

Circuit-breaker functional unit CB

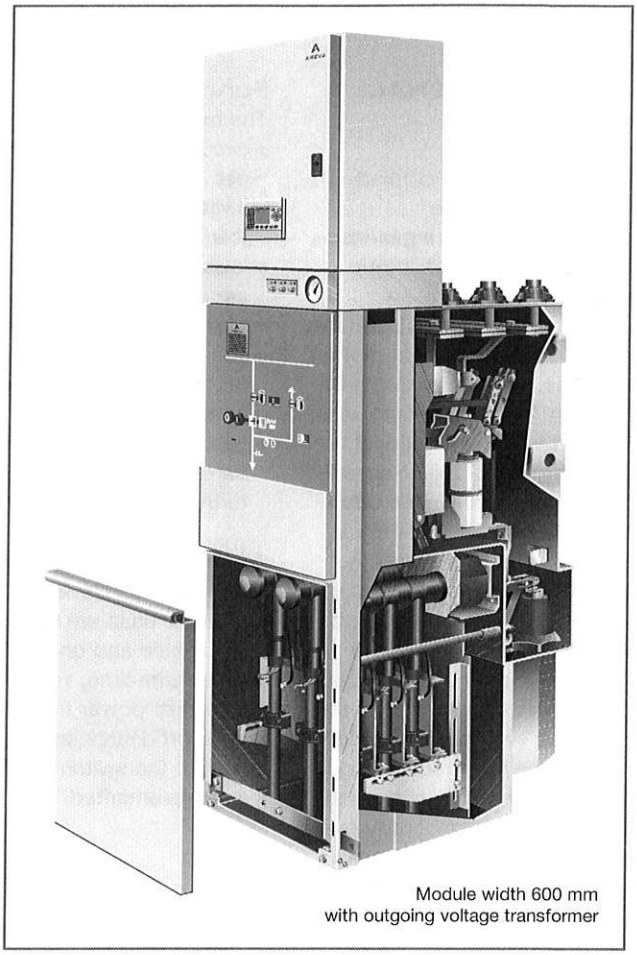

Module width 600 mm
with outgoing voltage transformer

Functional unit CB with circuit-breaker

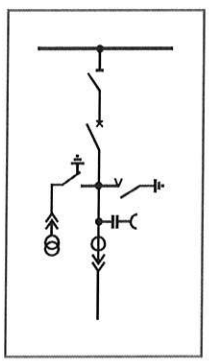

Circuit-breaker functional unit CB

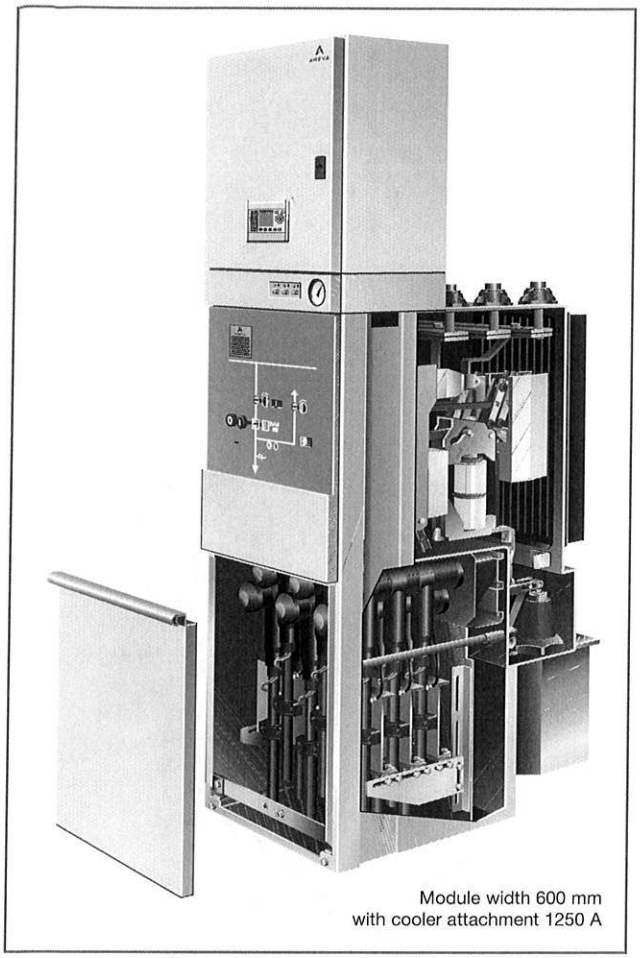

Module width 600 mm
with cooler attachment 1250 A

Functional unit CB12
Voltage transformer with isolating device and outgoing feeder cable with second bushing / conductor for cable connection as of 4 cables / conductors

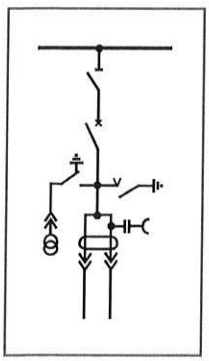

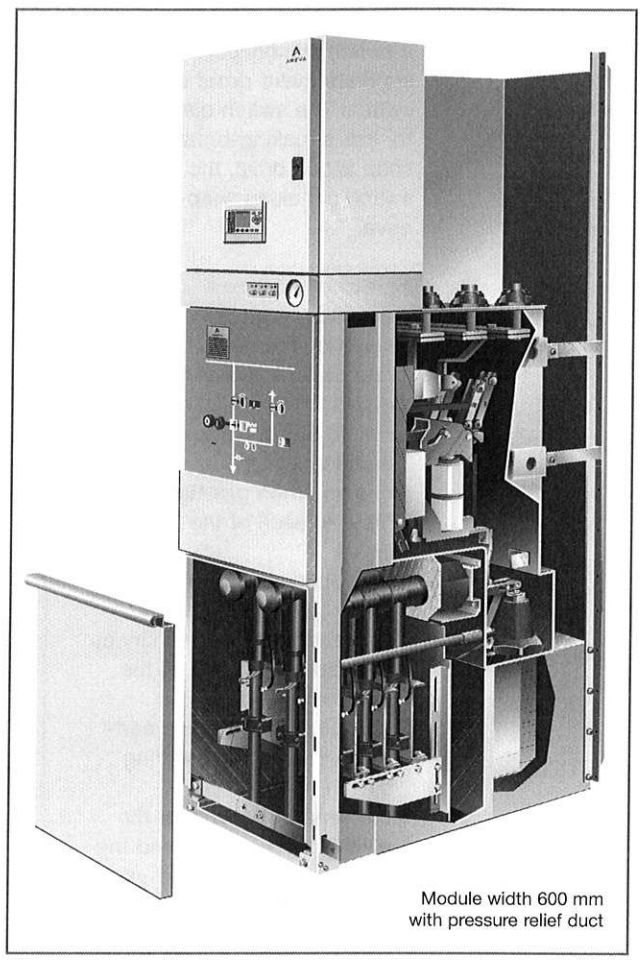

Module width 600 mm
with pressure relief duct

Functional unit CB6
with pressure relief duct, voltage transformer with isolating device and outgoing feeder cable with pressure relief duct, voltage transformer with isolating device and outgoing feeder cable with 3 cables / conductor (max. 3 x 300 mm²)

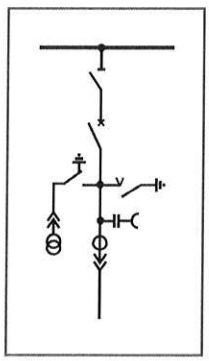

Switch disconnector functional unit C

The switching unit consists of a switch disconnector and a separate make-proof earthing switch. The switch disconnector has a making-breaking snap action drive, the earthing switch a making snap action drive.

Special features

- > extremely high operating reliability thanks to the separate switching devices and drives for the functions switch disconnector and earthing switch
- > one common gas-tight bushing for each of the three poles
- > conventional isolating distance, not bridged by insulating material, enhances operator safety, e.g. in the case of cable tests
- > conventional outgoing earthing via separate earthing switch
- > the separate drives for the switch disconnector and the earthing switch ensure extremely high operating reliability
- > with rated short-circuit inrush current 40 kA:
  - 10 closing operations for the switch disconnector (required in acc. with DIN VDE/IEC/EN - 2 closing operations)
  - 10 closing operations for the earthing switch
- > with rated short-circuit inrush current
- > 40 kA - 60 kA:
  - 5 closing operations for the switch disconnector (required in acc. with DIN VDE/IEC/EN - 2 closing operations)
  - 5 closing operations for the earthing switch

Cable feeder functional unit C

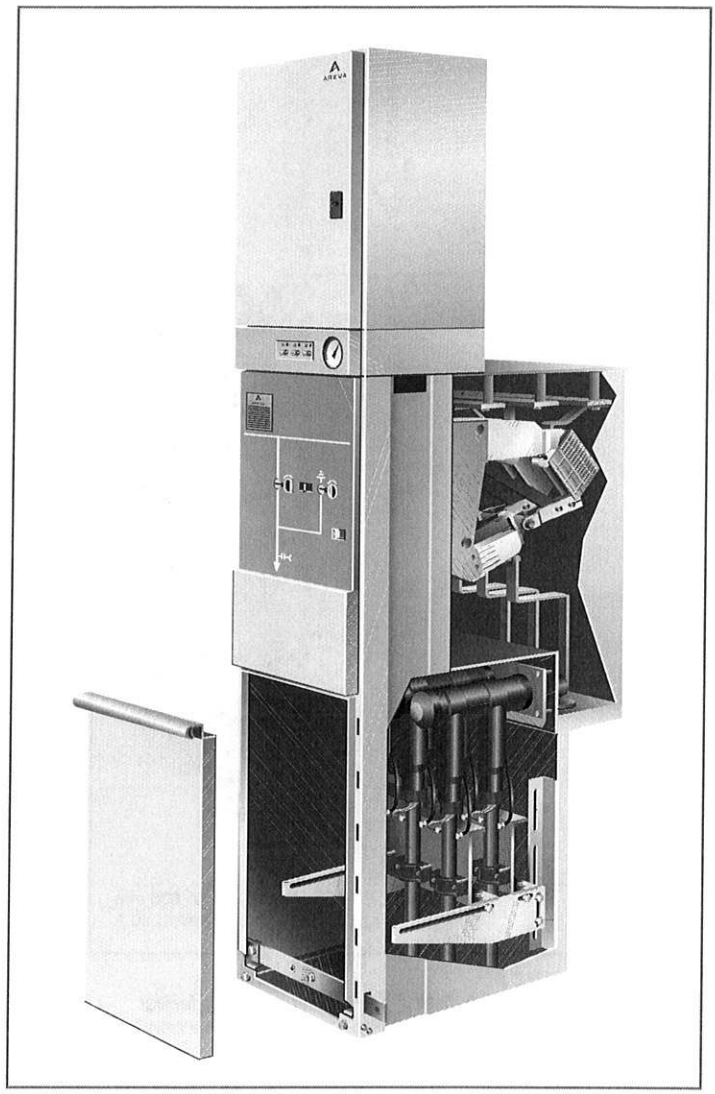

Cable feeder C with switch disconnector

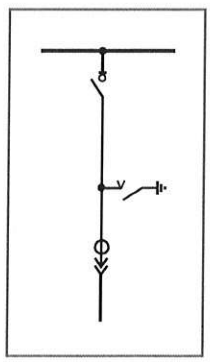

Switch fuse combination T1

The functional unit consists of the combination of a switch disconnector with gas-tight receivers for the H.V.H.R.C. fuse links, installed systematically in the gas-filled compartment.

One earthing switch is located upstream and one downstream of each fuse receiver. These switching devices have been coupled mechanically for actuation. The switch disconnector has a making snap-action and breaking stored-energy mechanism. The all-pole breaking of the switch disconnector on tripping of a fuse is effected mechanically via the tripping pin of the H.V.H.R.C. fuse link and a tripping linkage.

Special features

- > extremely high operator safety thanks to separate earthing switch upstream and downstream of the fuse receivers
- > replacement of fuses by hand, without insulating means
- > systematic integration of the fuse receivers into the gas-filled compartments. The dielectric fields are located essentially within the gas-filled compartment - not outside of the gas tank in air atmosphere.
- > The H.V.H.R.C. fuse links can be replaced extremely easily merely using a double-bit key
- > deposits of conductive layers (e.g. industrial or maritime atmosphere) not possible on the isolating surface of the fuse attachment
- > mechanical indicator for "H.V.H.R.C. fuse link tripped" - integrated in the control / indicator surface
- > extremely high rated transfer current I4 in accordance with EN 62271-105 and IEC 62271-105
  12 kV 3000 A
  17.5 kV 800 A
  24 kV 800 A
  Higher ratings involving supplementary facilities available on request
- > the continuous mechanical interlocks between switch disconnector / earthing switch – mechanical cover upstream of the fuse receivers enable extremely straightforward replacement of the H.V.H.R.C. fuse links with operator guidance.

Transformer feeder T1

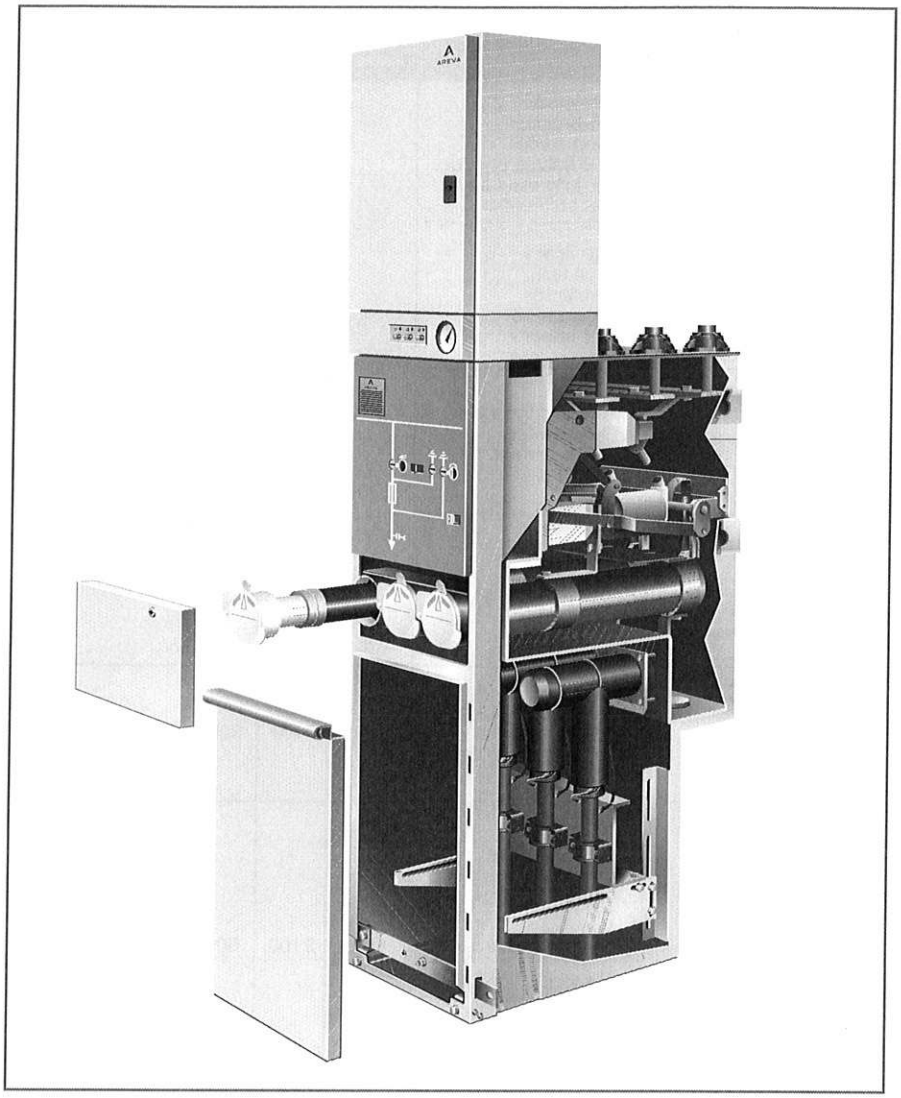

Transformer feeder T1 with switch fuse combination

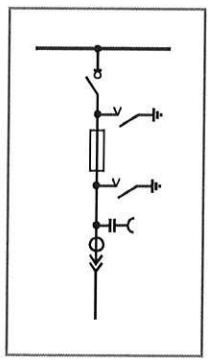

FUNCTION OVERVIEW WITH DIMENSIONS AND WEIGHTS

Functional units up to 630 A

Function code		Functional units	Width mm	Height mm	Depth mm	Functional units per module
CB6	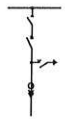	Disconnector Circuit-breaker Earthing switch (max. 3 cables/conductors or fully insulated busbar connection)	450	2100	800	1 to 4
R6-R12, RE6-RE12, RD6 RDE6		Busbar riser, optional with: Disconnector Earthing switch current transformer				
C		Switch disconnector Earthing switch Optional: current transformer				
BB-E		Functional unit Busbar earthing switch				
T1	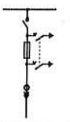	Transformer feeder Switch fuse combination 2 x earthing switch Optional: current transformer	450	2100	800	Separate module 1 to 2
BS-SD6		<u>Bus sectionalizer:</u> Switch disconnector Optional: Earthing switch	600	2100	800	1
BC-CB6		<u>Bus coupler::</u> Disconnector Circuit-breaker Optional: Earthing switch				1
BC-CB6/RDE6	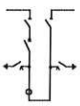	<u>Bus coupler::</u> Disconnector Circuit-breaker Optional: Earthing switch and current transformer <u>Busbar riser:</u> Optional: disconnector and Earthing switch	1200	2100	800	1
M1		Air-insulated metering panels for billing metering	1000	1380	720	1
M2				2100	800	1
M3						1

Instrument transformer	Instrument transformer at busbar
 BB-VT	Pluggable voltage transformers at the busbar on the busbar coupling chamber
 BB-VTS	Pluggable voltage transformers with isolating device at the busbar on the busbar coupling chamber

Weights

1	functional unit Circuit-breaker or switch disconnector	ca. 250 kg
1	set of busbar voltage transformers	ca. 125 kg
1	fuse attachment (in case of switch disconnector)	ca. 180 kg
1	end plate (40 mm)	ca. 50 kg
1	low voltage cabinet	ca. 70 kg

The total weight depends on the devices fitted in the switchgear, from the sum of the individual weights.

FUNCTION OVERVIEW WITH DIMENSIONS AND WEIGHTS

Functional units up to 1250 A

Function code		Functional units	Width mm	Height mm	Depth mm	Functional units per module
CB6 bis CB12	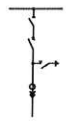	Disconnector Circuit-breaker Earthing switch (1x outer cone / phase)	600	2100	800	1 to 3
CB6 bis CB12	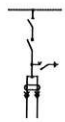	Disconnector Circuit-breaker Earthing switch (2x outer cone / phase)			1000	
R12, RE12, RD12, RDE12		Busbar riser, optional with: Disconnector earthing switch current transformer			800	
BB-E		Functional unit Busbar earthing switch			800	
CB6 bis CB12		Disconnector Circuit-breaker Earthing switch Flange-on transformer (1x outer cone / phase)	600	2100	1000	1
CB6 bis CB12		Disconnector Circuit-breaker Earthing switch Flange-on transformer 2x outer cone / phase)				1
BC-CB6/RDE6 bis CB12/RDE12	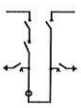	Bus coupler: Disconnector Circuit-breaker Optional: Earthing switch Busbar riser: Optional: disconnector and Earthing switch	1200	2100	800	1
BC-CB6/RDE6 bis CB12/RDE12	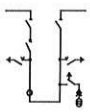	Bus coupler: Disconnector Circuit-breaker Optional: Earthing switch Current transformer Busbar riser: Optional: disconnector Earthing switch	2 x 600	2100	1000	1

Instrument transformer	Instrument transformer at busbar
 BB-VT	Pluggable voltage transformers at the busbar on the busbar coupling chamber
 BB-VTS	Pluggable voltage transformers with isolating device at the busbar on the busbar coupling chamber

Weights

1	functional unit Circuit-breaker or switch disconnector	ca. 250 kg
1	set of busbar voltage transformers	ca. 125 kg
1	fuse attachment (in case of switch disconnector)	ca. 180 kg
1	end plate (40 mm)	ca. 50 kg
1	low voltage cabinet	ca. 70 kg

The total weight depends on the devices fitted in the switchgear, from the sum of the individual weights.

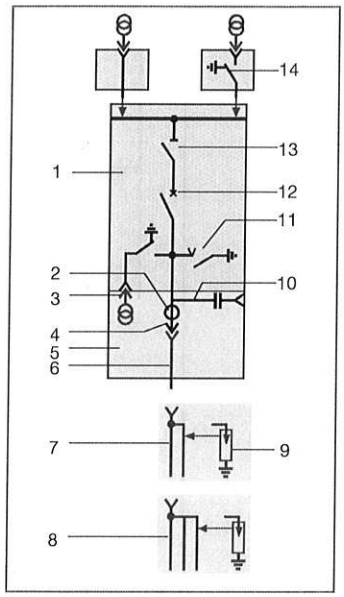

Explanations:

1 Gas-filled compartment
2 Toroidal-core current transformer
3 Disconnectable voltage transformers (not in case of module width 450 mm)
4 Outer cone-type connector in acc. with EN 50181, terminal type C
5 Cable connection compartment
6 Cable connection plug
7 - for 2 cables/conductors up to 630 mm^2 cable cross section or 1 cable + surge arrester
8 - for 3 cables/conductors up to 300 mm^2 cable cross section or 2 cables m+ surge arrester
9 Surge arrester
10 Pluggable voltage detection system
11 Earthing switch
12 Circuit-breaker
13 Disconnector
14 Voltage transformer module on busbar without or with isolating device

Function units up to 630 A, module width 450 mm

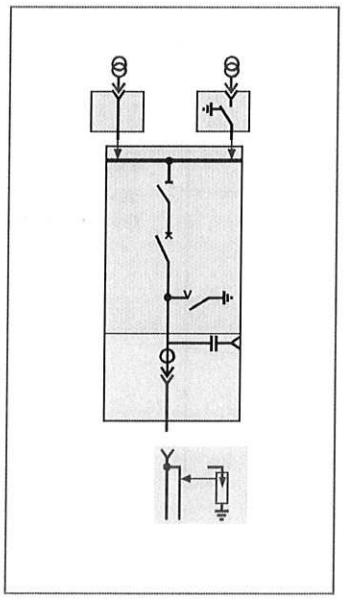

Functional unit CB with
- Disconnector
- Circuit-breaker
- Earthing switch
- Toroidal-core current transformer
- Capacitive pick-offs

Optionally available:
- busbar voltage transformer without or with isolating device

Outer cone-type cable connector:
in acc. with EN 50181 Terminal type C
- single cable connector
- double or single with surge arrestor

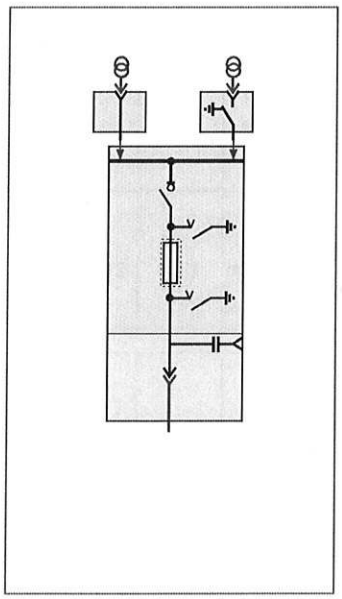

Transformer feeder T1 with
- switch disconnector fuse combination
- 2 x earthing switch
- capacitive pick-offs

Optionally available:
- busbar voltage transformer without or with isolating device

Outer cone-type cable connector:
in acc. with EN 50181 Terminal type A
- single cable connector 250 A

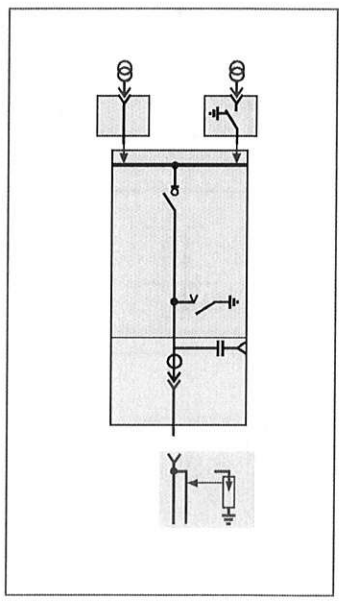

Cable feeder C with
- switch disconnector
- earthing switch
- capacitive pick-offs

Optionally available:
- busbar voltage transformer without or with isolating device
- toroidal-core current transformer

Outer cone-type cable connector:
in acc. with EN 50181 Terminal type C
- single cable connector
- double or single with surge arrestor

Function units up to 630 A, module width 450 mm

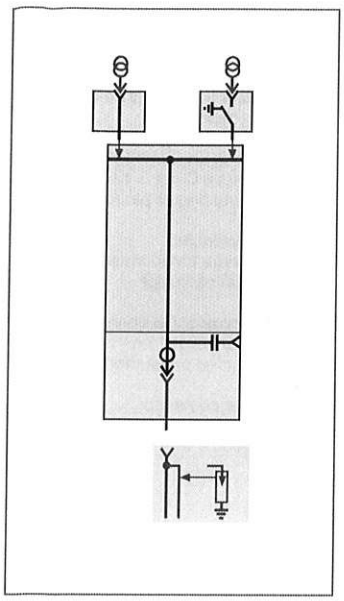

Riser R with
- capacitive pick-offs

Optionally available:
- busbar voltage transformer without or with isolating device
- toroidal-core current transformer
- up to 1250 A

Outer cone-type cable connector:
in acc. with EN 50181 Terminal type C
(for > 630 A with reinforced conductor pin 1250 A)
- single cable connector
- double or single with surge arrestor

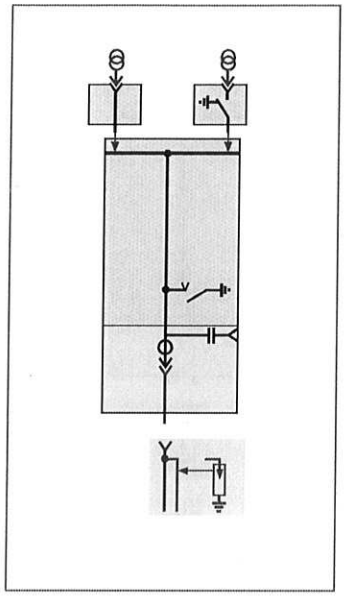

Riser RE with
- earthing switch
- capacitive pick-offs

Optionally available:
- busbar voltage transformer without or with isolating device
- toroidal-core current transformer
- up to 1250 A

Outer cone-type cable connector:
in acc. with EN 50181 Terminal type C
(for > 630 A with reinforced conductor pin 1250 A)
- single cable connector
- double or single with surge arrestor

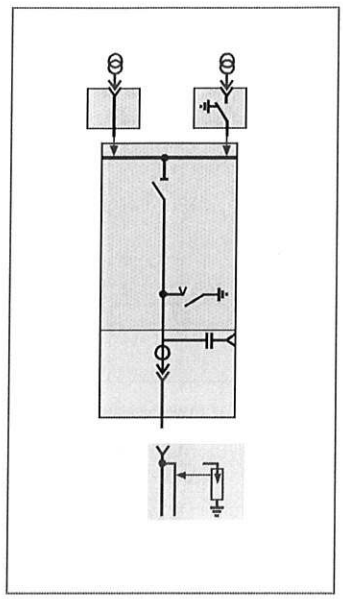

Riser RDE with
- disconnector
- earthing switch
- capacitive pick-offs

Optionally available:
- busbar voltage transformer without or with isolating device
- toroidal-core current transformer

Outer cone-type cable connector:
in acc. with EN 50181 Terminal type C
- single cable connector
- double or single with surge arrestor

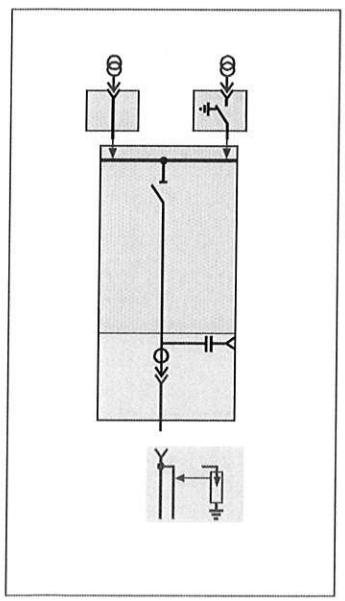

Riser RD with
- disconnector
- capacitive pick-offs

Optionally available:
- busbar voltage transformer without or with isolating device
- toroidal-core current transformer

Outer cone-type cable connector:
in acc. with EN 50181 Terminal type C
- single cable connector
- double or single with surge arrestor

Function units up to 1250 A, module width 600 mm

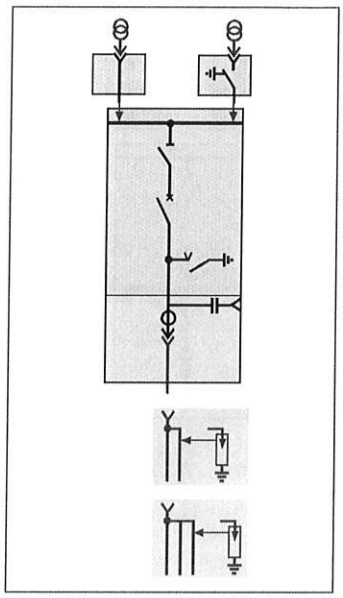

1x outer cone / conductor

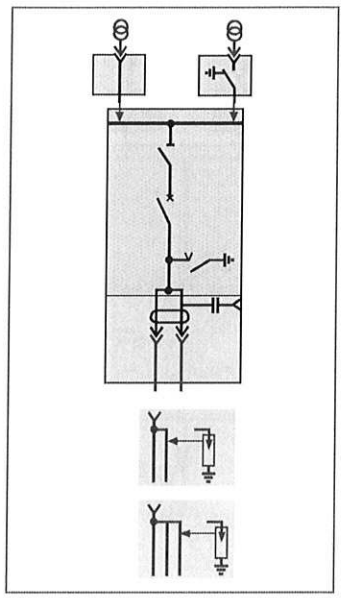

2 x outer cone / conductor

Functional units CB with
- disconnector
- circuit-breaker
- earthing switch
- toroidal-core current transformer
- capacitive pick-offs
- 1 or 2 outer cone-type couplers / conductors in acc. with EN 50181 connector type C (for > 630 A with reinforced conductor pin for 1250 A)

Optionally available:
- busbar voltage transformer without or with isolating device

Outer cone-type cable connector: in acc. with EN 50181 connector type C with reinforced conductor pin for 1250 A
- single cable connector
- double or single with surge arrestor
- triple or double with surge arrestor

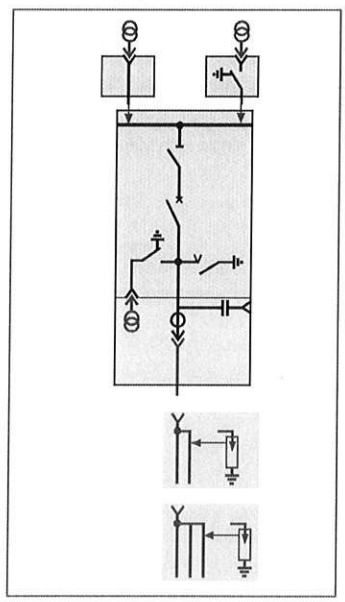

1x outer cone / conductor

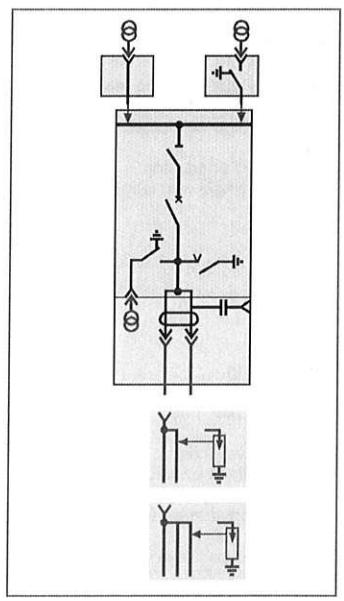

2 x outer cone / conductor

Functional units CB with
- disconnector
- circuit-breaker
- earthing switch
- toroidal-core current transformer
- capacitive pick-offs
- 1 or 2 outer cone-type couplers / conductors in acc. with EN 50181 connector type C for > 630 A with reinforced conductor pin for 1250 A

Optionally available:
- voltage transformer in outgoing feeder with isolating device
- busbar voltage transformer without or with isolating device

Outer cone-type cable connector: in acc. with EN 50181 connector type C with reinforced conductor pin for 1250 A
- single cable connector
- double or single with surge arrestor
- triple or double with surge arrestor

Function units up to 1250 A, module width 600 mm

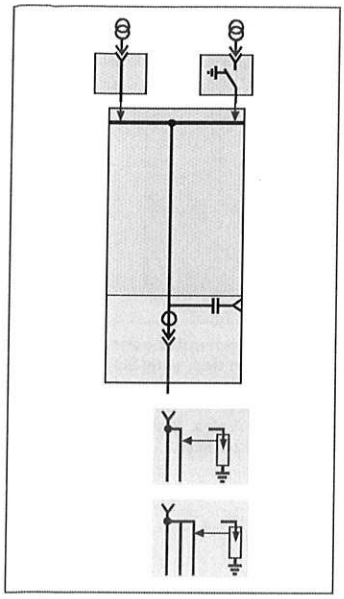

R

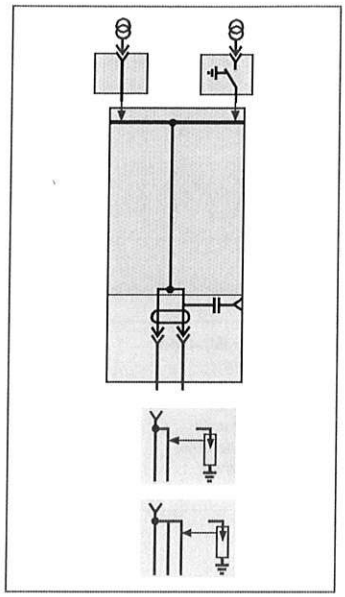

R

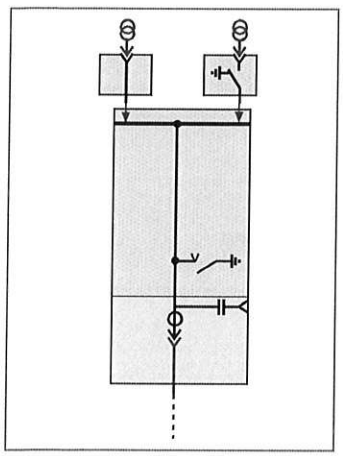

RE

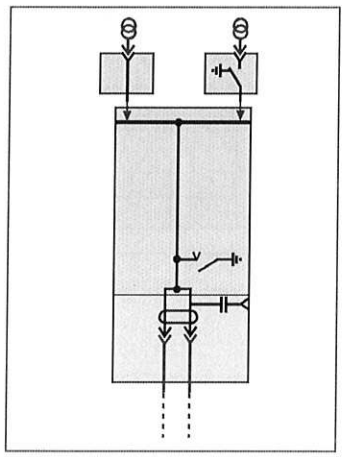

RE

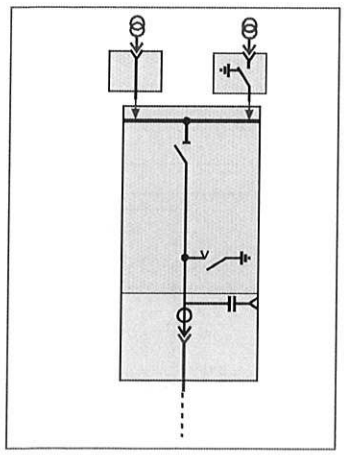

RDE

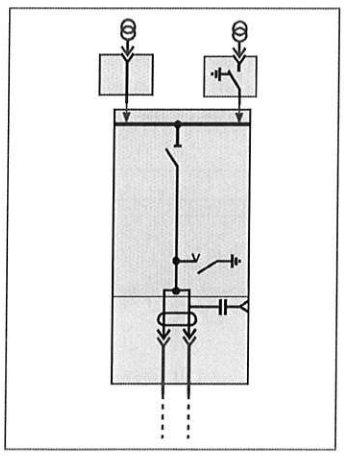

RDE

Risers R with
- capacitive pick-offs
- 1 or 2 outer cone-type couplers / conductors in acc. with EN 50181 connector type C with reinforced conductor pin for 1250 A

Optionally available:
- toroidal-core current transformer

Riser RE with
- earthing switch
- capacitive pick-offs
- 1 or 2 outer cone-type couplers / conductors in acc. with EN 50181 connector type C with reinforced conductor pin for 1250 A

Optionally available:
- toroidal-core current transformer

Riser RD with
- disconnector
- capacitive pick-off
- 1 or 2 outer cone-type couplers / conductors in acc. with EN 50181 connector type C with reinforced conductor pin for 1250 A

Riser RDE with
- disconnector
- earthing switch
- capacitive pick-offs
- 1 or 2 outer cone-type couplers / conductors in acc. with EN 50181 connector type C with reinforced conductor pin for 1250 A

Optionally available:
- toroidal-core current transformer
- busbar voltage transformer without or with isolating device

Outer cone-type cable connector:
in acc. with EN 50181 connector type C with reinforced conductor pin for 1250 A
- single cable connector
- double or single with surge arrestor
- triple or double with surge arrestor

Bus sectionalizer, bus couplers and metering panels

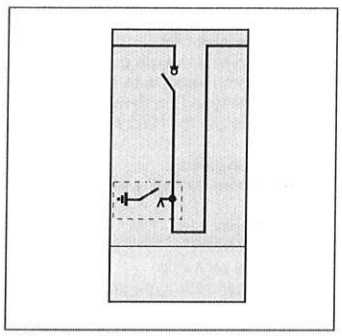

Bus sectionalizer BS-SD6,
630 A, 600 mm
with
- switch disconnector

Optionally available:
- earthing switch

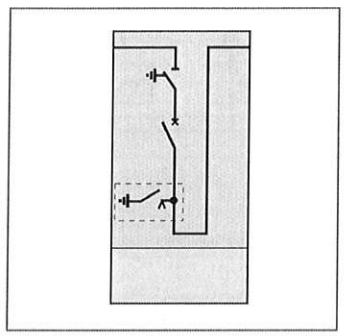

Bus coupler BC-CB6,
630 A, 600 mm
with
- circuit-breaker
- disconnector

Optionally available:
- earthing switch

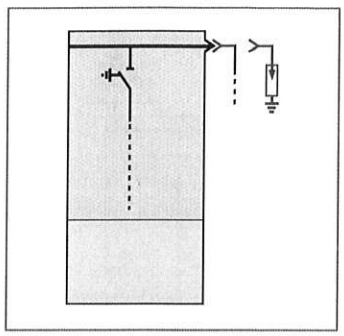

End panel with outer cone-type connector in acc. with EN 50181, terminal type C on the busbar BB-Con
up to 1250 A max. 2 cables / conductor
or 1x surge arrester

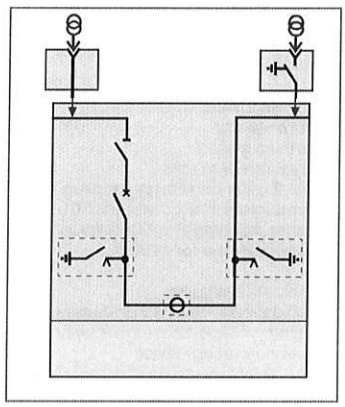

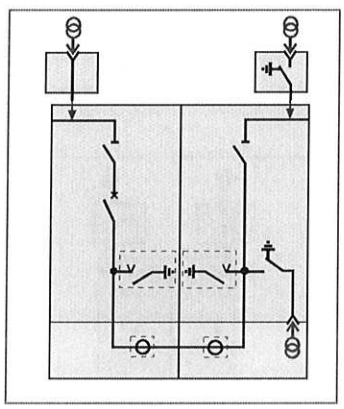

⬚ = Optional

Bus coupler BC-CB6/R,
630 A, or with CB12, 1250 A
One 2-module tank,
module width 1200 mm with
- disconnector
- circuit-breaker

Optionally available:
- earthing switch
- toroidal-core current transformer
- busbar voltage transformer without or with isolating device
- outgoing voltage transformer with isolating device

Air-insulated metering panels M
Current and voltage transformers, also in inverse order

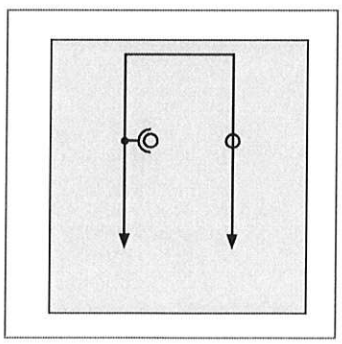

Metering panel M1

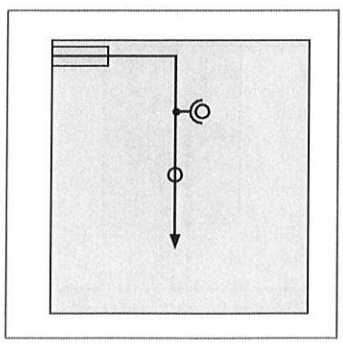

Metering panel M2

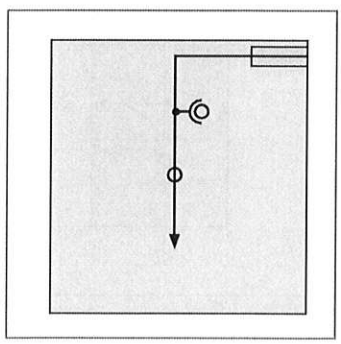

Metering panel M3

Straightforward operation via functional intuitive operator interface

GMA has been designed for mechanical operation on the functional units.

Mechanical operation is performed the same way as with the habitual operation of air-insulated switchgear with fixed switching devices. Separate control elements and mechanical indicators are available for the following functions:

- Circuit-breaker
  ON - OFF
- Switch disconnector
  ON - OFF
- Disconnector
  ON - OFF
- Earthing switch
  ON - OFF

The mechanical control panel is located at an ergonomically convenient height and arranged in a recessed position on the switchgear front. Thus, the operating area is clearly visible without control elements protruding from the switchgear front.

The position of the individual elements has been selected according to their function, i.e. according to their allocation to the corresponding device functions.

The elements which form part of main switching devices, such as position indicators, interrogating interlock and insertion openings, are visually linked by a specific pattern and integrated in a mimic diagram.

Even in case of failure of the auxiliary supply, all switch positions are still displayed reliably by mechanical means. Mechanical switching operations, such as outgoing earthing, are also possible without auxiliary supply in case of models without electrical blocking coils.

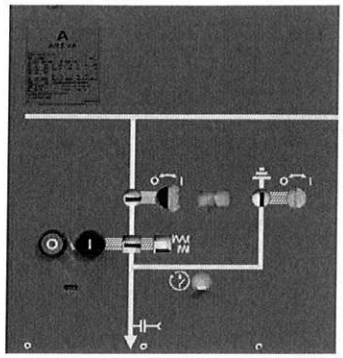

Control panel of a circuit-breaker functional unit

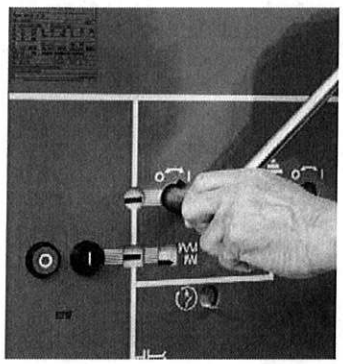

Mechanical operation of the disconnector

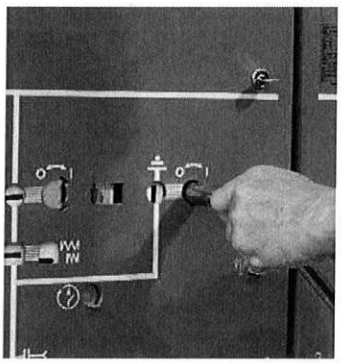

Mechanical operation of the earthing switch

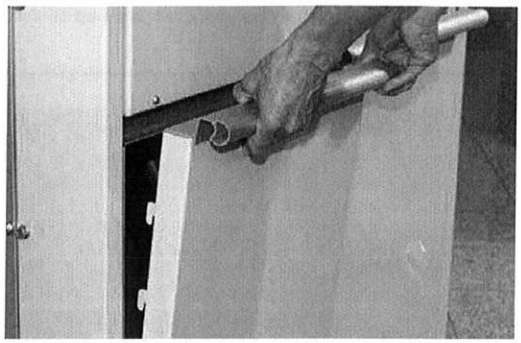

Opening the lower cable compartment cover after unlocking

MECHANICAL OPERATOR INTERFACES

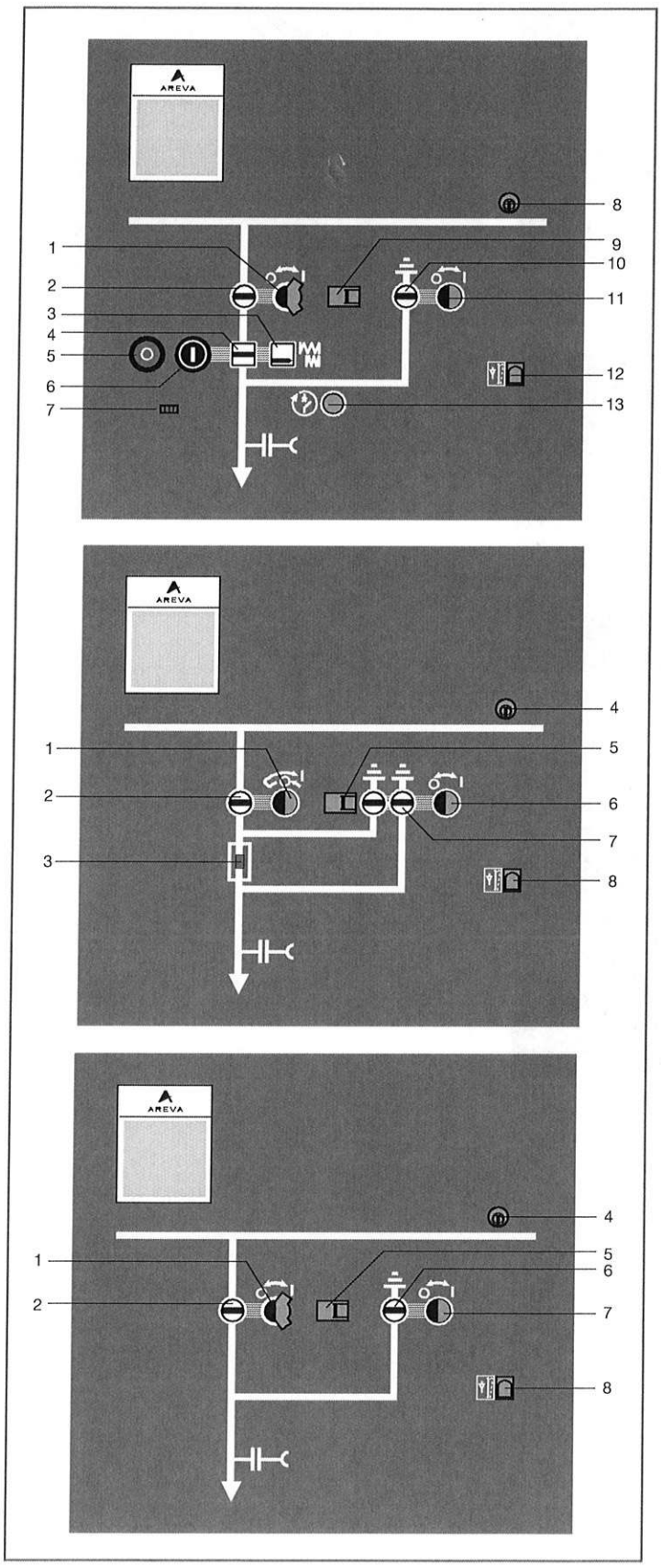

CB circuit-breaker unit

1 Opening for operation of the disconnector
2 Position indicator of disconnector
3 Position indicator spring DISCHARGED / CHARGED
4 Switch position indicator, circuit-breaker
5 Push-button OFF, circuit-breaker
6 Push-button ON, circuit-breaker
7 Operations counter
8 Mechanical lockout mechanism with keylock (optional)
9 Mechanical interrogator interlock for insertion openings, disconnector and earthing switch
10 Position indicator of earthing switch
11 Opening for operation of the earthing switch
12 Unlocking the cable compartment cover
13 Opening for mechanical charging of the energystoring device for the circuit-breaker

Transformer-feeder T1 with switch disconnector fuse combination

1 Opening for operation of the switch disconnector
2 Position indicator of switch disconnector
3 Indicator for "H.V.H.R.C. fuse link tripped" (red/green)
4 Mechanical lockout mechanism with keylock (optional)
5 Mechanical interrogator interlock for switch disconnector and earthing switch
6 Opening for operation of the earthing switches
7 Position indicator of earthing switch
8 Unlocking the cable compartment cover

Cable feeder C with switch disconnector unit

1 Opening for operation of the switch disconnector
2 Position indicator of switch disconnector
4 Mechanical lockout mechanism with keylock (optional)
5 Mechanical interrogator interlock for switch disconnector and earthing switch
6 Position indicator of earthing switch
7 Opening for operation of the earthing switches
8 Unlocking the cable compartment cover

Gas compartment monitoring

The gas compartments of the GMA series are hermetically sealed pressure systems in acc. with IEC 60694 (new IEC 62271-1). Replenishing insulating gas SF6 during normal operation is not necessary during the expected useful life.

The individual gas-filled compartments are monitored by a pressure gauge. A busbar coupling chamber is assigned to each gas-filled compartment (see page 30).

Pressure monitoring using a pressure gauge

Each of the gas-filled compartments is monitored via a temperature-compensated pressure gauge indicating readiness for operation (basic design). At special request, pressure gauges are implemented optionally with remote signalling contacts.

Pressure relief device

Each module is equipped with a pressure relief device. The pressure relief areas of the gas-filled compartments are metallically separated from the cable connection compartments. The pressure relief feature of the cable connection compartment is preferably directed downwards to the rear; pressure relief of the module tank's gas compartment is directed upwards to the rear.

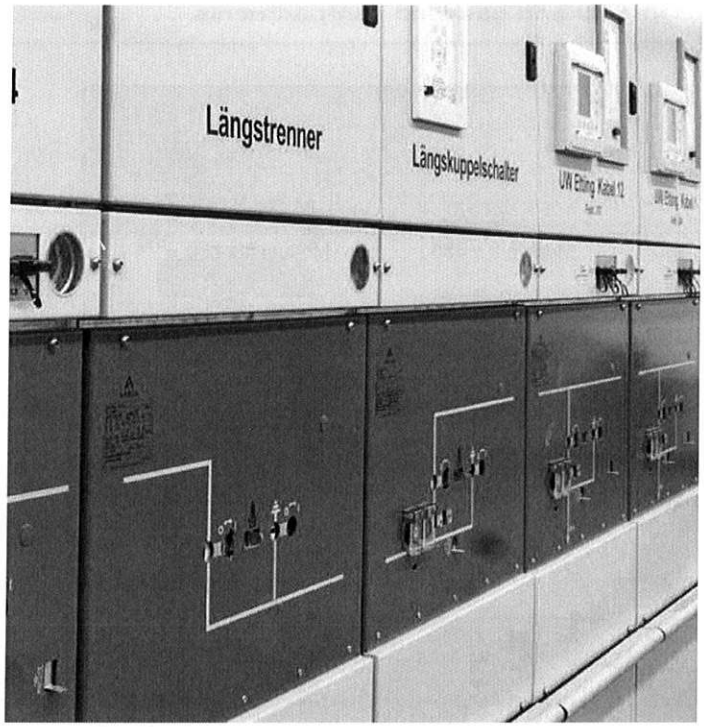

GMA switchgear with pressure gauge

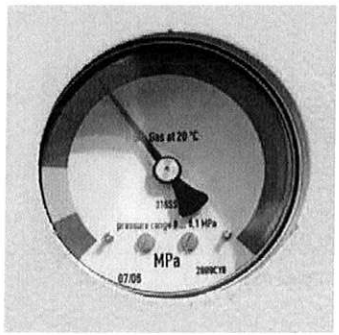

Pressure gauge indicating readiness for operation (basic design)

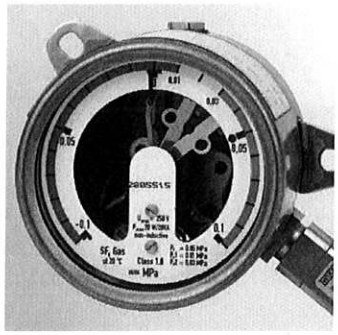

Pressure gauge with remote signalling (optional)

Examples for alignment and gas-filled compartments

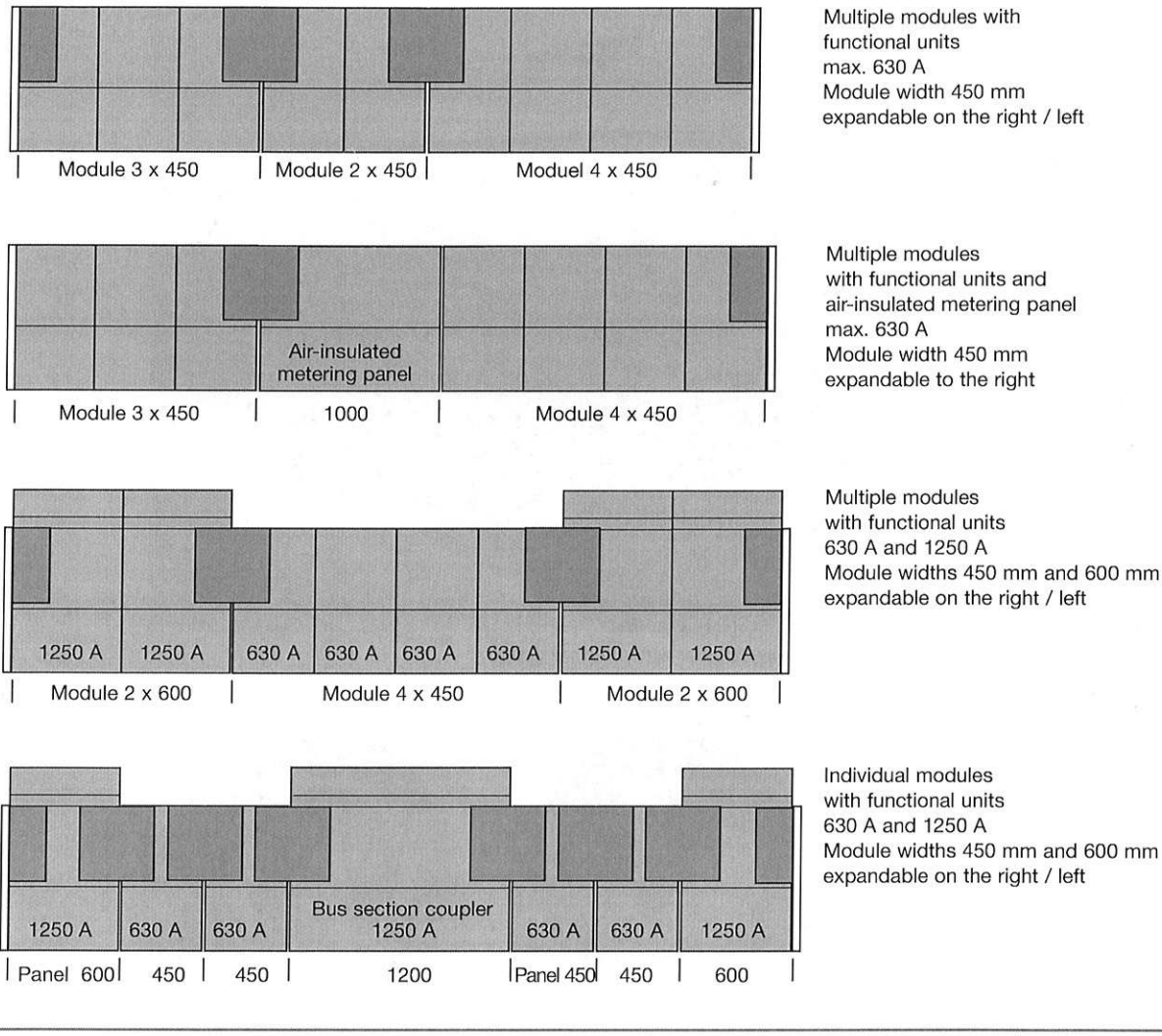

Example of a GMA gas compartment diagram

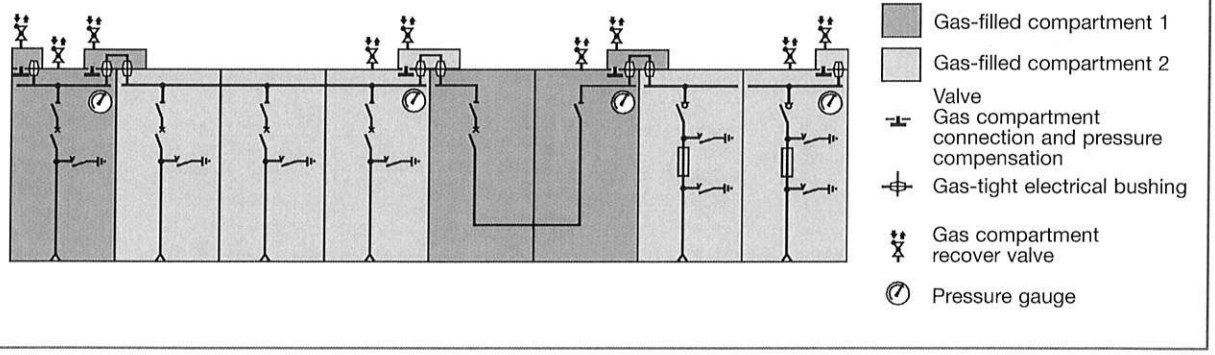

For multiple modules, the common pressure gauge is always located in the right-hand functional unit.

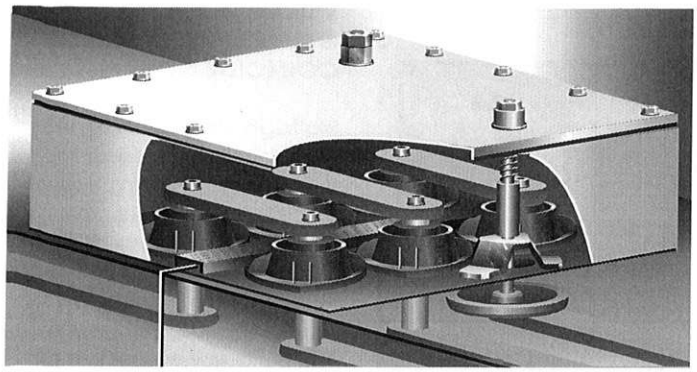

Coupling chambers of adjacent modules (principle: busbar connection)

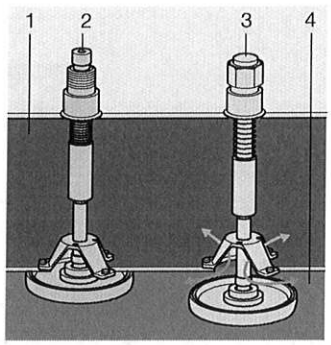

Gas compensation via valves

1 Coupling chamber, gas-filled
2 Valve closed
3 Valve opened
4 Gas-filled compartment

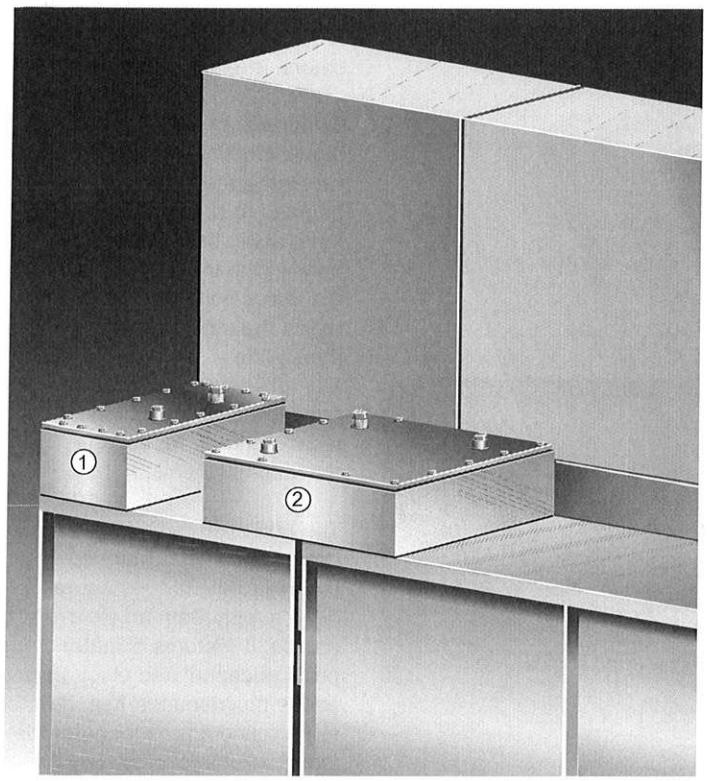

1 Gas-filled busbar end chamber for right-hand or left-hand expansion of the switchgear
2 Gas-filled busbar coupling chamber for connection of adjacent modules

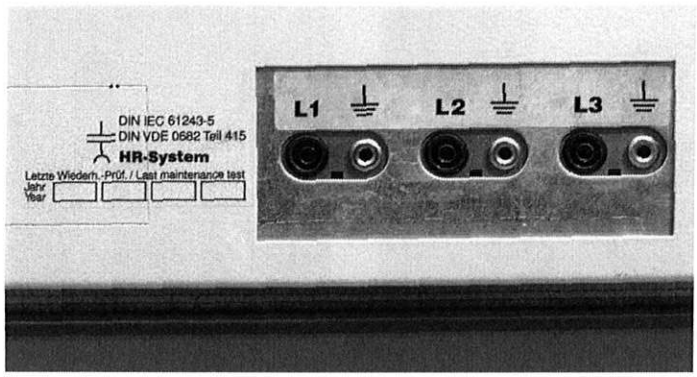

Pluggable voltage detection system in acc. with IEC 61243-5 (basic design)

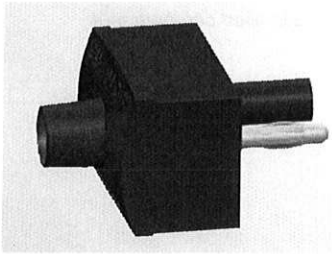

Horstmann indicator

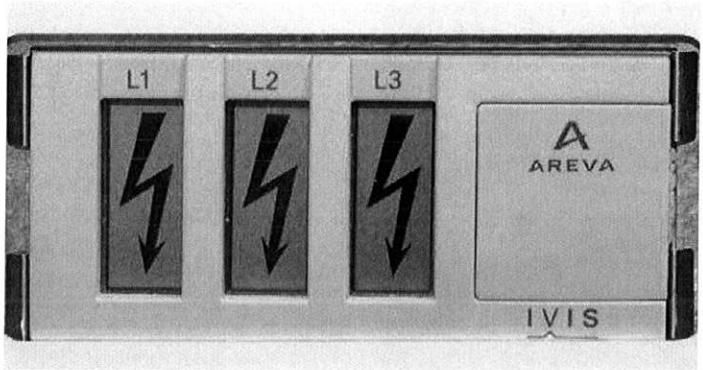

IVIS display (optional)

VOLTAGE DETECTION SYSTEM AND PHASE COINCIDENCE

Voltage detection system

A pluggable high-resistance (HR) voltage detection system (not integrated) in accordance with IEC 61243-5, and VDE 0682, part 415 or EN 61243-5, is used to determine zero voltage of the outgoing feeders. The multi-way connectors for the voltage indicators are located in the instrument niche. Accessories subject to special order: High-resistance HR indicators, made by Horstmann.

Optionally, the integrated Voltage Detecting System IVIS with integrated indicator can be used to determine zero voltage. Logic flash arrow symbols on the indicators display the mains voltage still existing within the defined response thresholds.
The IVIS system does not require the electrical repeat tests common for voltage detection systems.

The IVIS system has been designed for maximum operating reliability. It does not require supply from an external source. It features climate-proof encapsulated electronics and is maintenance-free, due to permanent monitoring of the indication thresholds.
IVIS satisfies the requirements of IEC 61243-5, VDE 0682, part 415, or EN 61243-5 for integrated voltage detection systems.

Phase coincidence

In case of the non-pluggable voltage detection systems, phase coincidence is determined by means of HR (high-resistance) phase monitors in accordance with IEC 61243-5/EN 61243-5/VDE 0682, part 415, via integrated, hermetically shielded measuring sockets by means of a phase monitor for HR interfaces (high-resistance) in acc. with IEC 61243-5/VDE 0682, part 415.

Switchgear control systems IMOS

To reduce operating costs in distribution systems, the Intelligent Management und Operating System IMOS can be used optionally for operation and control of medium-voltage switchgear.

IMOS' functionalities have been tuned specifically to the requirements of medium-voltage switchgear, including ancillary plants. The modular system covers all the various information within the distribution network. Given the logically designed user interface, no special knowledge of control systems or training are required of the operators.

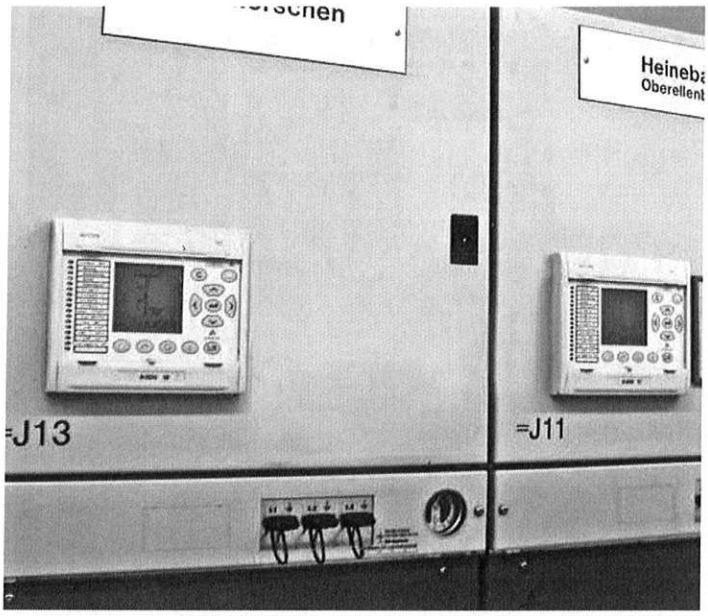

MICOM relay in GMA

The digital protection and measuring relays in the switchgear are autonomous units and have been integrated serially or parallel into the entire switchgear.

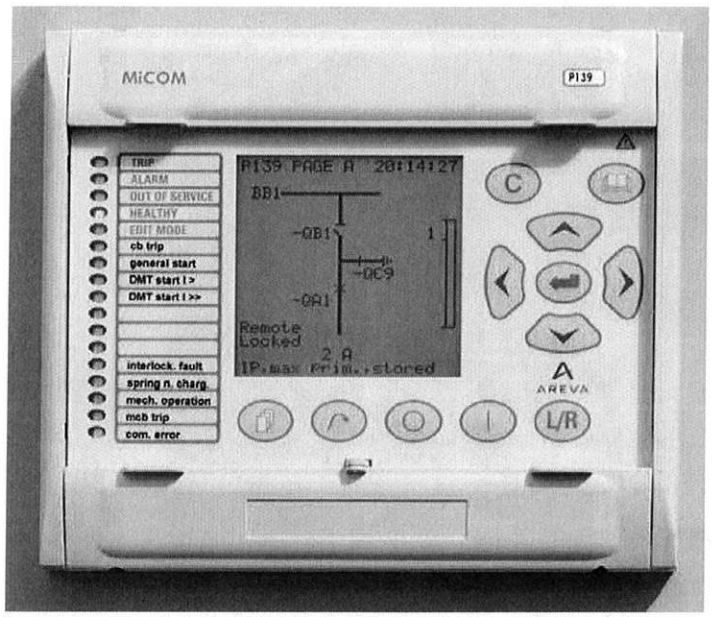

MICOM relay

Central screen

- > comprises a fully graphic colour screen; all operating screens appear in the form of logical graphics
- > informs the user about all data of individual sections or about the entire switchgear
- > provides ergonomically designed operating functions in professional design
- > permits continuous operator guidance
- > provides information in clear, non-coded text in long form.
- > unrestricted mechanical actuation is possible in case of failure of the auxiliary voltage.

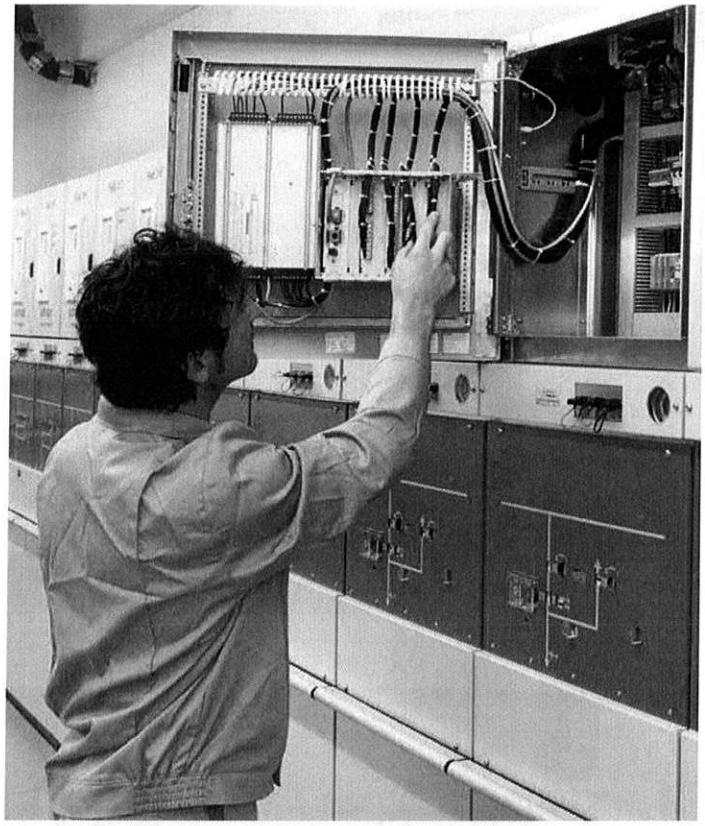

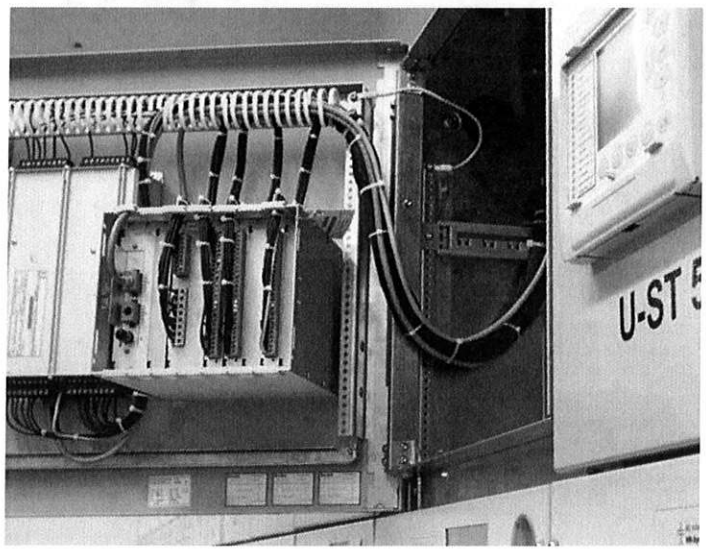

Low-voltage cabinet with devices installed in the door

Low-voltage cabinet

The secondary devices and protection relays for control, measurement, billing metering and other systems are installed in the low-voltage cabinet. The shock-proof low-voltage cabinet which is systematically separated from the primary section, is an autonomous closed low-voltage cabinet with mechanical and electrical interface to the vertical section. A special advantage for the operator is the fact that the low-voltage cabinet can be disassembled.

Each low-voltage cabinet can be dismantled completely for transport and integration in the switchgear compartment. The low-voltage cables between the drive section and the low-voltage cabinet are routed via terminal plug-and-socket connectors. Retrofitting spare panels and conversion or replacement of complete low-voltage cabinets (e.g. due to process changes) at a later date is straightforward.

The torsion-resistant door of the low-voltage cabinet is used e.g. to accommodate measuring equipment, control elements and protection relays.

Current transformers

Low-voltage toroidal-core current transformers (mounted on the extended outer cone-type bushings) are used in the outgoing feeder block. If necessary, one current transformer core can be designed as calibratable/calibrated core for billing metering.

Retrofitting or replacement of the toroidal-core current transformers is possible without problems without interfering with the gas-filled compartment. For normal current measurement, the switch disconnector functional unit can be equipped, if necessary, with one cable-type current transformer per conductor.

These cable-type current transformers are normally located in the cable basement and are mounted onto the earthed cable jackets of single-conductor cables.

Voltage transformers

The inductive, single-pole voltage transformers are shock-proof and earthed in conformity with the system. As busbar voltage transformers, they are plugged directly onto the switchgear outside of the gas-filled compartment. The voltage transformers in the outgoing feeder block are connected to the functional units via plugged-in cable connections.

In case of the 600 mm-wide circuit-breaker functional units, the voltage transformers with isolating/earthing device mounted upstream can be flanged directly onto the busbar or in the outgoing feeder block for these transformers.

All voltage transformers are available with calibratable/calibrated measuring windings for billing metering.

Current and voltage transformers in the functional unit

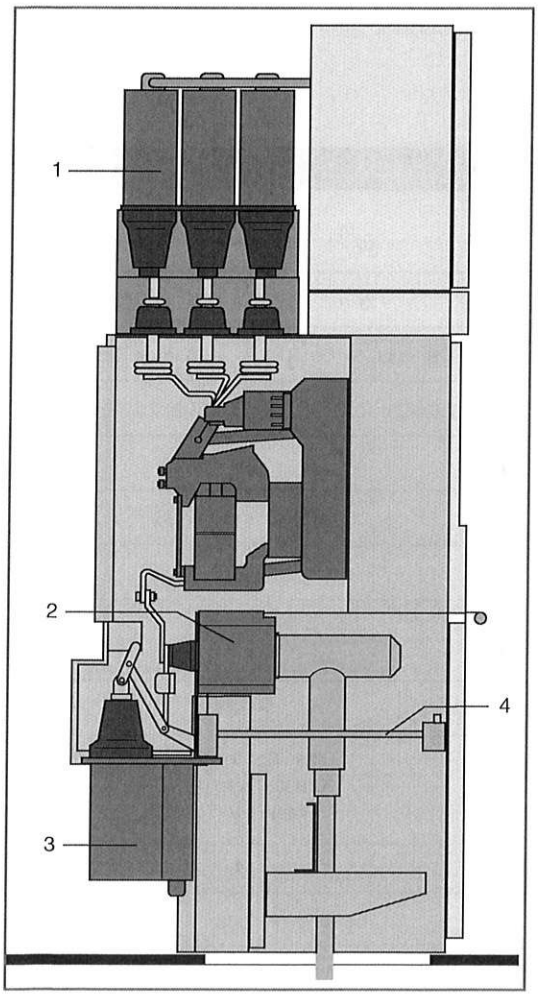

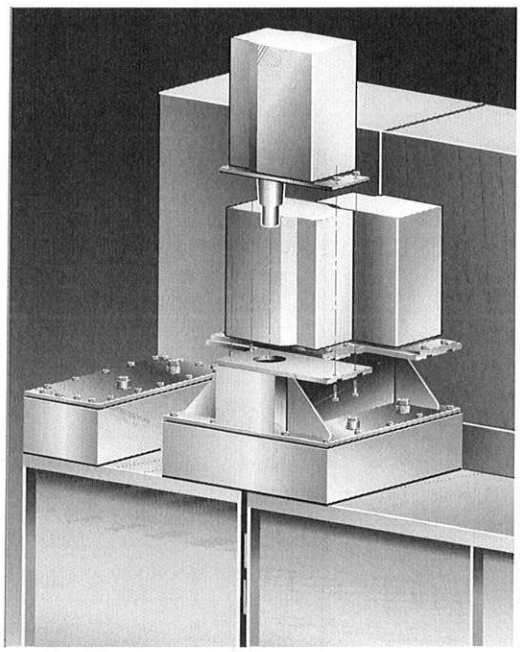

Pluggable voltage transformers on the busbar, without additional module width

1 Voltage transformer module on busbar
2 Toroidal-core current transformer
3 Voltage transformer on outgoing feeder block (module width 600 mm)
4 Isolating device for voltage transformer

The current transformers in the bus couplers BC-CB/R are installed in the gas-filled compartment as toroidal-current transformers attached to the earthed bushings. The secondary lines are provided via gas-tight bushings outside of the gas-filled compartments on terminal modules.

The current transformers in the bus section couplers with BC-CB/RDE measurement (with 2 adjacent modules of 600 mm each) are designed as the transformers in the outgoing feeder, module width 600 mm.

STANDARDIZED TRANSFORMER DATA

Toroidal-core current transformer

Maximum voltage for operating equipment U_m in kV	0.72
Rated short-time power frequency withstand voltage in kV	3
Primary rated current intensity in A	100, 200, 300, 400, 600, 1000, 1250 A *)
Thermal rated short-time current intensity max.	max. 25 kA
Number of primary measuring ranges	1
Secondary rated current intensity in A	1
Number of cores	1 or 2
Number of the cores thereof admitted for calibration	1
Rated frequency in Hz	50 / 60
Measuring core - recommended class	1 FS10 *)
Protective core - recommended class	5 P10 *)
Recommended rated power in VA	3 *)

*) Deviating values on request

Voltage transformer

	VGM 12	VGM 24
Maximum permanently admissible operating voltage U_m in kV	12	24
Winding test voltage in kV	3	3
Winding test voltage in kV	28, max. $5x\sqrt{3}xU_N$	50, max. $5x\sqrt{3}xU_N$
Primary voltage in kV	$6/\sqrt{3}$; $6{,}6/\sqrt{3}$; $10/\sqrt{3}$; $11/\sqrt{3}$ *)	$15/\sqrt{3}$; $20/\sqrt{3}$; $22/\sqrt{3}$ *)
Number of primary measuring ranges	1	
Secondary measuring voltage in V	$100/\sqrt{3}$ and $110/\sqrt{3}$	
Number of secondary windings	2	
Number of the measuring windings thereof admitted for calibration	1	
Rated frequency in Hz	50 / 60	
Rated power in VA and class	Class 0.2 to 25 VA *) Class 0.5 to 45 VA Class 1 to 75 VA	
Secondary thermal limit current in A	4	

*) Deviating values on request

At choice with winding for earth-fault detection: 100/3 V, 3 A
Rated voltage factor and duration of exposure to load: 1.9 x U_N, 8 h

BILLING METERING

Air-insulated metering panel

This solution – not in conformity with the system for gas-insulated switchgear – is only implemented in exceptional cases up to 630 A with tariff current transformers intended for installation in air-insulated switchgear. The air-insulated metering panel can be supplied up to a short-time current of max. 25 kA, duration 1 second, with IAC qualification IAC AFL in accordance with IEC 62271-200.

Modules exclusively used:

> 3 current transformers and 3 single-pole voltage transformers in accordance with DIN 42600 slim design in the air-insulated model for billing metering with the module width 1000 mm and the following dimensions:

Instrument transformer acc. to DIN 42600 slim design

Current transformers (DIN 42600 part 8)

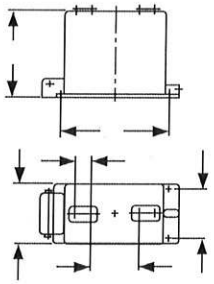

U_m in kV:

Dimension	12 kV	24 kV
b1	148	178
e1	125	150
e2	270	280
h1	220	280

Single-pole voltage transformers (DIN 42600 part 9)

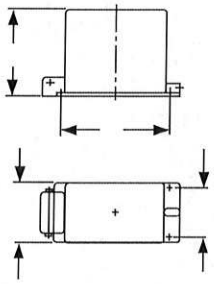

U_m in kV:

Dimension	12 kV	24 kV
b1	148	178
e1	125	150
e2	270	280
h1	220	280

Transformer for billing metering

In the case of all transformer attachment versions in GMA, for billing metering in Germany, the recommendation "Requirements regarding billing transformers for gas-insulated metal-enclosed medium-voltage switchgear up to 36 kV" of the Association of German Power Supply Companies (Vereinigung Deutscher Elektrizitätswerke unter VDEW e.V.) should be taken especially into account.

Transformer in outgoing feeder block

The existing solutions for systematically gas-insulated switchgear in conformity with the system are preferable - also for billing metering.
1 current transformer core each in the common current transformer block of the outgoing feeder can be realized in calibratable, calibrated design. The current transformer cores for billing metering feature a separate transformer terminal box which is located in easily accessible arrangement behind the cable compartment cover in the cable connection compartment.

Metering panel

Air-insulated metering panel M2 / M3

Versions for 12 kV and 24 kV

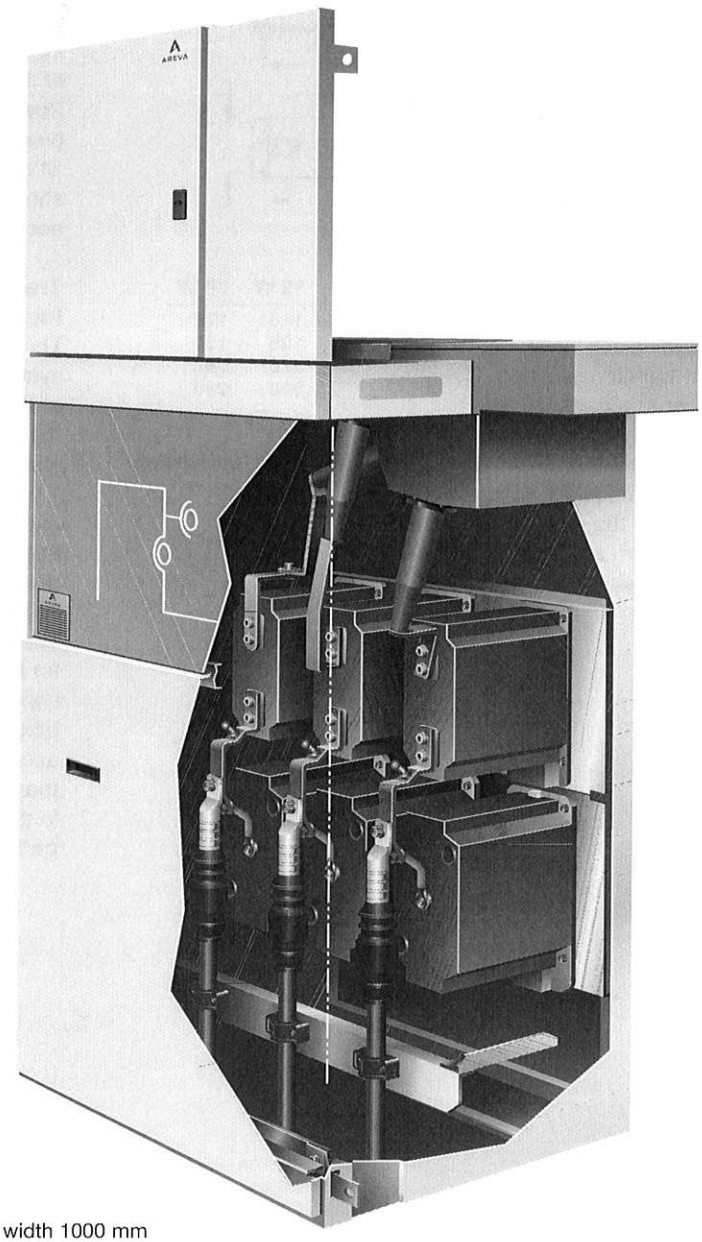

Module width 1000 mm

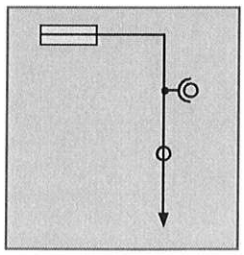

Metering panel M2

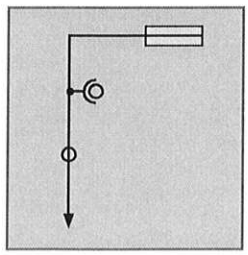

Metering panel M3

Air-insulated metering panel M1

Versions for 12 kV and 24 kV

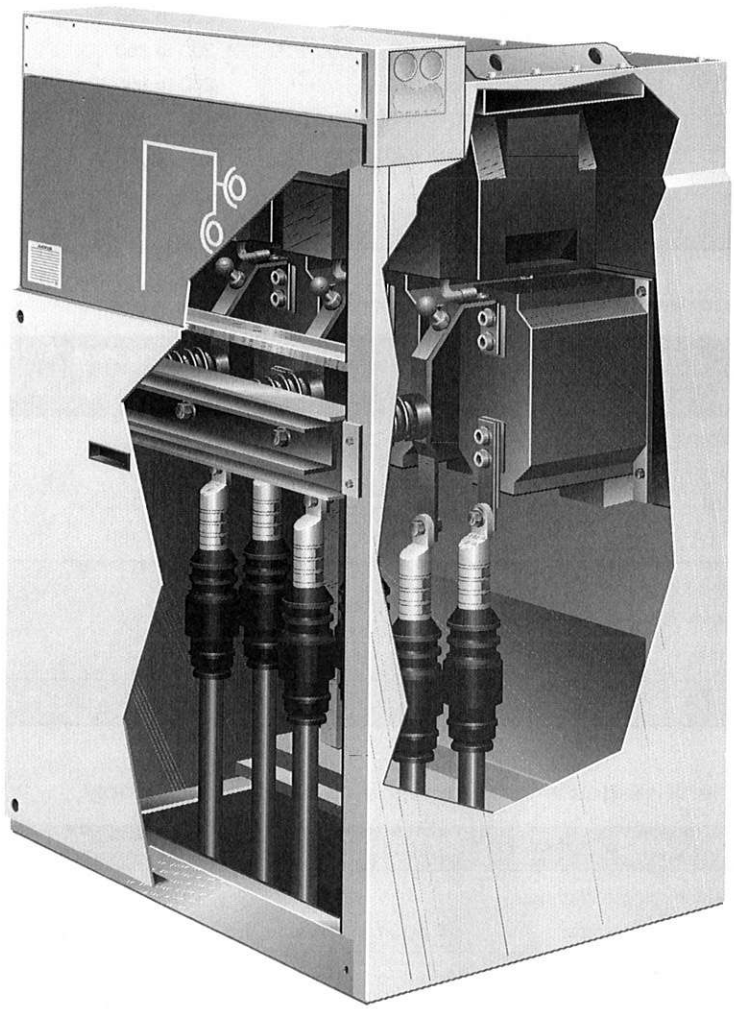

Module width 1020 mm

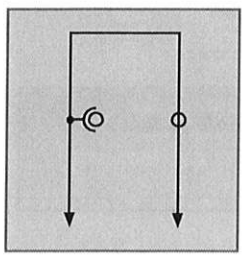

Metering panel M1

Electrical supplementary modules

DRIVE MOTORS, RELEASES AND BLOCKING COILS

Maximum power consumption of drive motors for CB, SD, E

Rated voltage of drive in V	Power consumption
DC	W
24	200 to 250
48	200 to 250
60	200 to 250
110	200 to 250
125	200 to 250
220	200 to 250
250	200 to 250
AC	VA
100	200 to 250
(110) 120	200 to 250
(220) 230	200 to 250

Power consumption of releases and coils

Type of release	DC actuation Consumption approx. W	AC current actuation, 50/60 Hz Consumption approx. VA
Without opening auxiliary spring energy store		
Closing coil	160	160
Opening coil	160	160
With opening auxiliary spring energy store		
Opening coil	25	25
Undervoltage release	12	12

Voltage limit ranges within which the releases work reliably

Type of release	DC voltage	AC voltage, 50/60 Hz
Shunt opening release (without/ with auxiliary energy store)	70 up to 110 % U_a	85 up to 110 % U_a
Shunt closing release	85 up to 110 % U_a	85 up to 110 % U_a
Undervoltage release	35 up to 0 % U_a	35 up to 0 % U_a

Rated power and ON duration of the interlock solenoids

Rated voltage V	Rated power W	ON duration %
DC 24/30/48/60/110/125/220/250	12/10	100 %
AC 110 (120), (220) 230	12/10	100 %

CB = Circuit-breaker
SD = Switch disconnector
E = Earthing switch

ADMISSIBLE NUMBERS OF BREAKING OPERATIONS OF CIRCUIT-BREAKER UP TO SUMMATION CURRENT LIMIT

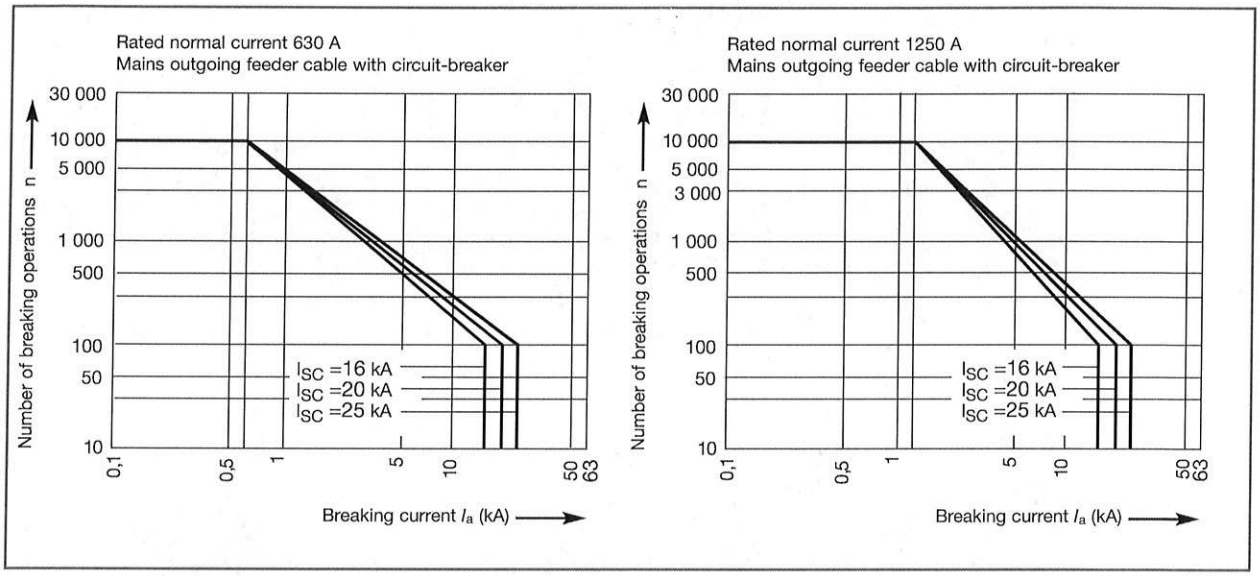

ADMISSIBLE NUMBERS OF BREAKING OPERATIONS OF CIRCUIT-BREAKER UP TO SUMMATION CURRENT LIMIT

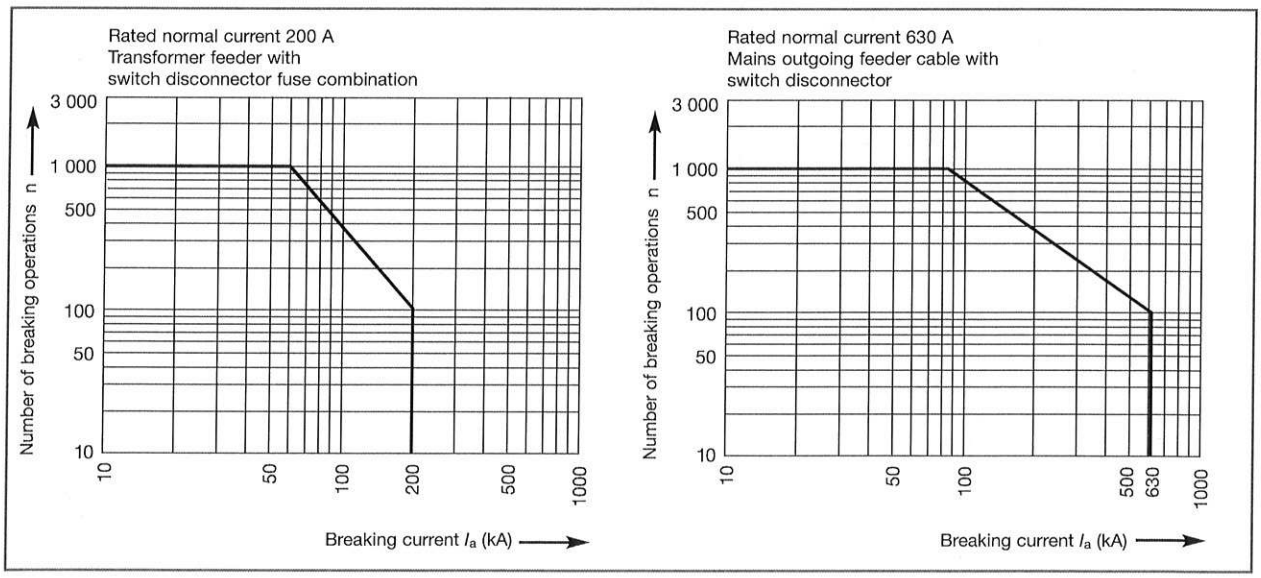

SELECTION TABLES

GMA WITH CIRCUIT-BREAKER FUNCTIONAL UNIT CB

Type	Width of a functional unit	Rated voltage	Rated insulation level			Rated filling pressure P_r at 20 °C	Insulating level at SF_6 pressure pe = 0 bar		Rated frequency	Rated (normal) current		Rated peak withstand current, equal to rated short-circuit making current
			Rated lightning impulse withstand voltage	Rated power frequency withstand voltage	Ratings of isolating distance (lightningimpulse / power frequency withstand voltage)		Lightning impulse withstand voltage	Power frequency withstand voltage		Busbar	Outg.	
	mm	kV	kV	kV	kV	bar	kV	kV	Hz	A	A	kA
GMA 12-16-04	450	12	75	28	85/32	0,3	75	28	50/60	630	630	40
GMA 12-16-04	450									1250	630	40
GMA 12-16-06	600									1250	800	40
GMA 12-16-06	600									1250	1000	40
GMA 12-16-06	600									1250	1250	40
GMA 12-20-04	450									630	630	50
GMA 12-20-04	450									1250	630	50
GMA 12-20-06	600									1250	800	50
GMA 12-20-06	600									1250	1000	50
GMA 12-20-06	600									1250	1250	50
GMA 12-25-04	450									630	630	63
GMA 12-25-04	450									1250	630	63
GMA 12-25-06	600									1250	800	63
GMA 12-25-06	600									1250	1000	63
GMA 12-25-06	600									1250	1250	63
GMA 24-16-04	450	24	125	50	145/60	0,3	95	50	50/60	630	630	40
GMA 24-16-04	450	or								1250	630	40
GMA 24-16-06	600	17.5								1250	800	40
GMA 24-16-06	600									1250	1000	40
GMA 24-16-06	600									1250	1250	40
GMA 24-20-04	450									630	630	50
GMA 24-20-04	450									1250	630	50
GMA 24-20-06	600									1250	800	50
GMA 24-20-06	600									1250	1000	50
GMA 24-20-06	600									1250	1250	50
GMA 24-25-04	450									630	630	63
GMA 24-25-04	450									1250	630	63
GMA 24-25-06	600									1250	800	63
GMA 24-25-06	600									1250	1000	63
GMA 24-25-06	600									1250	1250	63

Rated short time current	Rated short time current	Rated short-circuit breaking current	Percentage value of the DC component	Rated operating sequence		Cable breaking current	Number of short-circuit making operations using the earthing switch	Opening time	Closing time	Arc duration (max.)	Command time	
				O-3 min-CO-3 min-CO	O-0.3 s-CO-3 min-CO or CO-15 s-CO						ON	OFF
1 s	3 s											
kA	kA	kA	%	E2	E1	A	E2	ms	ms	ms	ms	ms
16	16	16	37	•	•	25	10	35	60	12	20	20
16	16	16					10	–	–			
16	16	16					10	41	80			
16	16	16					10					
16	16	16					10					
20	20	20					5					
20	20	20					5					
20	20	20					5					
20	20	20					5					
20	20	20					5					
25	25	25					5					
25	25	25					5					
25	25	25					5					
25	25	25					5					
25	25	25					5					
16	16	16	37	•	•	31,5	10	35	60	12	20	20
16	16	16					10	–	–			
16	16	16					10	41	80			
16	16	16					10					
16	16	16					10					
20	20	20					5					
20	20	20					5					
20	20	20					5					
20	20	20					5					
20	20	20					5					
25	25	25					5					
25	25	25					5					
25	25	25					5					
25	25	25					5					
25	25	25					5					

GMA WITH SWITCH DISCONNECTOR FUNCTIONAL UNIT C

Type	Width of a functional unit	Rated voltage	Rated insulation level			Rated filling pressure P_r at 20 °C	Insulating level at SF_6 pressure pe = 0 bar		Rated frequency	Rated (normal) current		Rated peak withstand current, equal to rated short-circuit making current
			Rated lightning impulse withstand voltage	Rated power frequency withstand voltage	Ratings of isolating distance (lightning impulse / power frequency withstand voltage)		Lightning impulse withstand voltage	Power frequency withstand voltage		Busbar	Outg.	
	mm	kV	kV	kV	kV	bar	kV	kV	Hz	A	A	kA
GMA 12-16-04	450	12	75	28	85/32	0,3	75	28	50/60	630	630	40
GMA 12-16-04	450									1250	630	40
GMA 12-20-04	450									630	630	50
GMA 12-20-04	450									1250	630	50
GMA 12-25-04	450								50	630	630	63
GMA 12-25-04	450									1250	630	63
GMA 24-16-04	450	24	125	50	145/60	0,3	95	50	50/60	630	630	40
GMA 24-16-04	450	or								1250	630	40
GMA 24-20-04	450	17.5								630	630	50
GMA 24-20-04	450									1250	630	50
GMA 24-25-04	450								50	630	630	63
GMA 24-25-04	450									1250	630	63

Rated short-time current	Rated short-time current	Network load and closed-loop breaking current	Cable breaking current	Breaking current under earth-fault conditions	Cable breaking current under earth-fault conditions	Number of short-circuit making operations using the switch disconnector	Number of short-circuit making operations using the earthing switch	motorized spring charging	
								Opening time of switch disconnector	Closing time of switch disconnector
1 s	3 s								
kA	kA	A	A					s	s
16	16	630	160	600	160	10	10	≤ 3	≤ 3
16	16					10	10		
20	20					5	5		
20	20					5	5		
25	25					5	5		
25	25					5	5		
16	16	630	160	600	160	10	10	≤ 3	≤ 3
16	16					10	10		
20	20					5	5		
20	20					5	5		
25	25					5	5		
25	25					5	5		

GMA WITH SWITCH FUSE COMBINATION T1

Type	Width of a functional uni	Rated voltage	Rated insulation level			Rated filling pressure P_r at 20 °C	Insulating level at SF_6 pressure pe = 0 bar		Rated frequency	Rated (normal) current		Peak withstand current, equal to rated short-circuit making current [1]
			Rated lightning impulse withstand voltage	Rated power frequency withstand voltage	Ratings of isolating distance (lightning impulse / power frequency withstand voltage)		Lightning impulse withstand voltage	Power frequency withstand voltage		Busbar	Outg.	
	mm	kV	kV	kV	kV	bar	kV	kV	Hz	A	A	kA
GMA 12-16-04	450	12	75	28	85/32	0,3	75	28	50/60	630	200	20
GMA 12-16-04	450									1250	200	20
GMA 12-20-04	450									630	200	20
GMA 12-20-04	450									1250	200	20
GMA 12-25-04	450								50	630	200	20
GMA 12-25-04	450									1250	200	20
GMA 24-16-04	450	24	125	50	145/60	0,3	95	50	50/60	630	200	16
GMA 24-16-04	450	or								1250	200	16
GMA 24-20-04	450	17.5								630	200	16
GMA 24-20-04	450									1250	200	16
GMA 24-25-04	450								50	630	200	16
GMA 24-25-04	450									1250	200	16

[1] max. ratings to which the fuse must limit the actual values
[2] 1500 A to 24 kV with supplementary facilities at special request
[3] up to 1600 and 2000 kVA available on request
[4] Rated value depending on selected fuse (see fuse Selection Table)

Short-time current 1 s	Low ind. currents	Rated transfer current I4 (IEC 60420) [4]	Number of short-circuit making operations using the switch disconnector	Number of short-circuit making operations using the earthing switch	Opening time with release 160 W	Command time	with motor drive mechanism (220-250 W/VA)	
							Opening time of switch disconnector	Closing time of switch disconnector
kA	kA	A	A				s	s
5	Transformer systems up to 1250 kVA [3]	3000	2	2	≤ 34	20	≤ 0.7	≤ 6
5			2	2				
5			2	2				
5			2	2				
5			2	2				
5			2	2				
5	Transformer systems up to 1250 kVA [3]	800 [2]	2	2	≤ 34	20	≤ 0.7	≤ 6
5			2	2				
5			2	2				
5			2	2				
5			2	2				
5			2	2				

Cable connection systems

CABLE CONNECTIONS

The amply designed cable connection area enables installation of different cable connection systems.

The cable connection compartment has been designed so that both
> fully insulated, metal-enclosed
or
> partially insulated connection systems up to 12 kV
can be installed alike.

Installation of the following configurations within the cable connection compartment is possible:
In case of an outer cone-type bushing/conductor up to
- 2x3 cable screw-type plugs up to 630 mm²
- 3x3 cable screw-type plugs up to 300 mm²
- instead of a cable screw-type plug / conductor, a surge arrestor can be used.

In case of 2 outer cone-type bushings/conductors up to
- 4x3 cable screw-type plugs up to 300 mm²
- instead of a cable screw-type plug / conductor, a surge arrestor can be used.

The switchgear has been equipped as standard with outer cone-type appliance coupler systems:
Appliance couplers 630 A acc. to EN 50181, connection type C, screw-type contact with internal thread M16. In outgoing feeders with rated currents > 630 A, the appliance couplers acc. to EN 50181, terminal type C, have been designed for reinforced conductor pins for 1250 A. To this effect, the use of appropriate Tee screw-type plugs is important.

Transformer outgoing feeders with switch disconnector fuse combination, version T1:
Appliance couplers 250 A acc. to EN 50181, connection type A, for plug-in contact $7.9 + {}^{0.02}/_{0,05}$ mm.

The selection tables on the following pages provide a selection of common connection systems.

The cables are connected to the outer cone-type connectors via Tee screw-type plugs 630 A or 250 A cable connectors.

Compliance with the specifications by the manufacturers of cable connectors, Tee screw-type plugs, partially insulated terminal adapters and surge arresters is mandatory for selection and assembly.

In the case of 2 outer cone-type bushings/conductor, a straight total number of cables must be mounted.

All outer cone-type cable bushings are arranged side by side on the front end, and for each outgoing feeder. If phase exchange of the cables is required, this is no problem within one outgoing feeder.

Horizontally and vertically adjustable cable supports enable a great variety of cable systems to be fixed. The cable supports feature bore-holes or oblong holes to accommodate the commonly used cable clips.

Additive supporting structures can be provided optionally for installation of dual/triple cables or surge arresters.

CABLE FASTENING

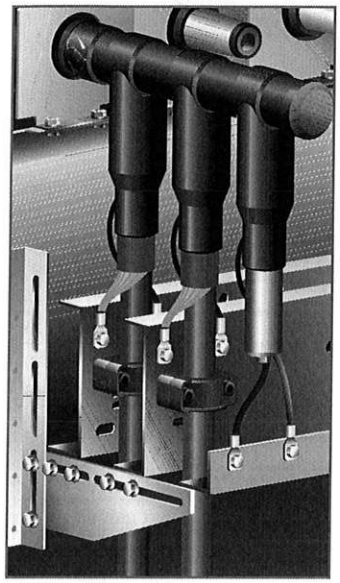

Examples:
Double cable connection with surge arrester

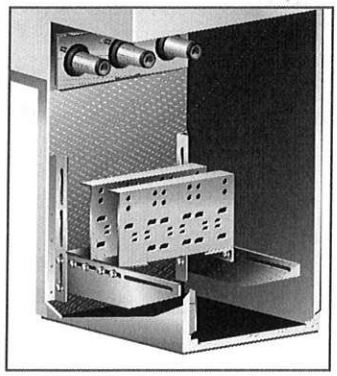

Double cable connection
Module width 450 mm,
without current transformer

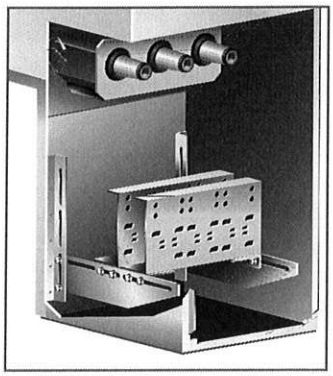

Double cable connection
Module width 450 mm,
with current transformer

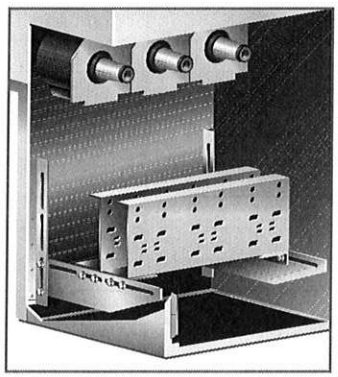

Double cable connection
Module width 600 mm

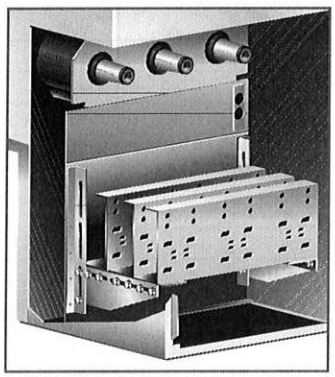

Triple cable connection
Module width 600 mm

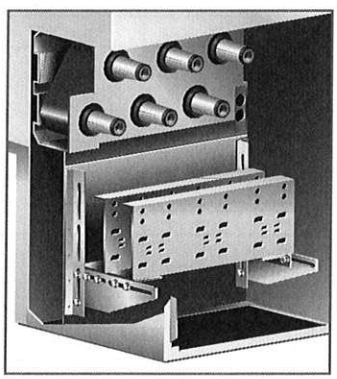

Quadruple cable connection
Module width 600 mm

12 KV FEEDER CABLE, SINGLE CONNECTION

630 A, outer cone-type acc. to EN 50181, connection type C, screw-type contact with internal thread M16x2 [2]

Examples:

Rated current	Panel width /space between conductors		Cable connection				Manufacturer
Outer-cone A	450/138 mm	600/190 mm	Screw-type plug terminal adapter	Surge arrester	Cable cross section mm²	Belted / ground cable end boxes	
Circuit-breaker unit [2] CB							
630	x	x	SET 12	MUT 13	50 - 300		Südkabel
630	x	x	SEHDT 13	MUT 13	400 - 500		Südkabel
630	x	x	RICS-51x9	RDA-xx	50 - 300	IXSU-F3xxx	Raychem (Tyco)
630	x	x	RICS-51xx		25 - 300	IXSU-F3xxx	Raychem (Tyco)
630	x	x	RICS-51xx		16 - 300	UHGK	Raychem (Tyco)
630	x	x	RICS-52xx		16 - 300	EPKT	Raychem (Tyco)
630	x	x	RSTI-L56xx		25 - 300		Raychem (Tyco)
630	x	x	RSTI-36Lxx		400 - 630		Raychem (Tyco)
630	x	x	RSTI-L56xx	RSTI-CC-56SA	25 - 300		Raychem (Tyco)
630	x	x	CB 12		25 - 300 [1]		nkt cables
630	x	x	CB 12	CSA 12	25 - 300 [1]		nkt cables
630	x	x	CB 36		300 - 630		nkt cables
630	x	x	AB 12		25 - 300		nkt cables
630	x	x	AB 12	ASA 12	25 - 300		nkt cables
630	x	x	AGT 10/630		95 - 240		EUROMOLD
630	x	x	AGTL 10/630		95 - 240		EUROMOLD
630	x	x	400TB/G	156 SA	35 - 300		EUROMOLD
630	x	x	430TB	300 SA	35 - 300		EUROMOLD
630	x	x	440TB/G		185 - 630		EUROMOLD
630	x	x	UC412 L		35 - 300		EUROMOLD
Switch disconnector unit C							
630	x		SET 12	MUT 13	50 - 300		Südkabel
630	x		SEHDT 13	MUT 13	400 - 500		Südkabel
630	x		400 TBS		70 - 300		EUROMOLD
630	x		RICS-51x9	RDA-xx	50 - 300	IXSU-F3xxx	Raychem (Tyco)
630	x		RICS-51xx		25 - 300	IXSU-F3xxx	Raychem (Tyco)
630	x		RICS-51xx		16 - 300	UHGK	Raychem (Tyco)
630	x		RICS-52xx		16 - 300	EPKT	Raychem (Tyco)
630	x		RSTI-L56xx		25 - 300		Raychem (Tyco)
630	x		RSTI-36Lxx		400 - 630		Raychem (Tyco)
630	x		RSTI-L56xx	RSTI-CC-56SA	25 - 300		Raychem (Tyco)
630	x		CB 12		25 - 300 [1]		nkt cables
630	x		CB 12	CSA 12	25 - 300 [1]		nkt cables
630	x		AB 12		25 - 300		nkt cables
630	x		AB 12	ASA 12	25 - 300		nkt cables
630	x		AGT 10/630		95 - 240		EUROMOLD
630	x		AGTL 10/630		95 - 240		EUROMOLD
630	x		400TB/G	156 SA	35 - 300		EUROMOLD
630	x		430TB	300 SA	35 - 300		EUROMOLD
630	x		440TB/G		185 - 630		EUROMOLD
630	x		UC412 L		35 - 300		EUROMOLD

AB = Adapter; CB = connector (nkt cables)

1) larger cross-sections available on request
2) in outgoing feeders > 630 A with enhanced conductor pin for 1250 A: Special coordination required for cable connectors > 630 A with the manufacturer of these connectors as regards the current-carrying capacity of the cable connectors

It is essential to comply with the technical information and assembly instructions of the manufacturers of the cable fittings.

12 KV FEEDER CABLE, MULTIPLE CONNECTION

630 A, or 1250 A, outer cone-type acc. to EN 50181, connection type C, screw-type contact with internal thread M16x2 [2]

Examples:

Rated current	Panel width /space between conductors		Cable connection			Manufacturer
Outer-cone A	450/138 mm	600/190 mm	Cables per phase	Screw-type plug/ terminal adapter	Cable cross section mm^2	
Circuit-breaker unit [2] CB						
630	x	x	2	SET 12 + KU 23.2	50 - 300	Südkabel
2 x 630		170	4	SET 12 + KU 23.2	50 - 300	Südkabel
630	x	x	2	RICS-57xx + RICS-51x7	25 - 300	Raychem (Tyco)
2 x 630		170	4	RICS-57xx + RICS-51x7	25 - 300	Raychem (Tyco)
630	x	x	2	RSTI-L56xx + RSTI-CC-L56xx	25 - 300	Raychem (Tyco)
630	x	x	2	RSTI-36Lxx + RSTI-66CP-M16	400 - 630	Raychem (Tyco)
2 x 630		170	4	RSTI-L56xx + RSTI-CC-L56xx	25 - 300	Raychem (Tyco)
630	x	x	2	CB 12 + CC 12	25 - 300 [1]	nkt cables
2 x 630		170	4	CB 12 + CC 12	25 - 300	nkt cables
630	x	x	2	CB 36 + CC 36	300 - 630	nkt cables
630	x	x	2	AGT 10/630 + CP AGT + AGT 10/630	25 - 240	EUROMOLD
630	x	x	2	AGTL 10/630 + CP AGT + AGTL 10/630	25 - 240	EUROMOLD
2 x 630		170	4	AGT 10/630 + CP AGT + AGT 10/630	25 - 240	EUROMOLD
2 x 630		170	4	AGTL 10/630 + CP AGT + AGTL 10/630	25 - 240	EUROMOLD
2 x 630		170	4	430TB + 300PB	35 - 300	EUROMOLD
630	x	x	2	430TB + 300PB	35 - 300	EUROMOLD
1250		x	3	RSTI-L56xx + 2 x RSTI-CC-L56xx (1250 A)	25 - 300	Raychem (Tyco)
1250		x	3	CB 12 + CC 12 (1250 A)	25 - 300	nkt cables
1250		x	2	CB 36 + CC 36 (1250 A)	300 - 630	nkt cables
Switch disconnector unit C						
630	x		2	SET 12 + KU 23.2	50 - 300	Südkabel
630	x		2	RICS-57xx + RICS-51x7	25 - 300	Raychem (Tyco)
630	x		2	RISTI-L56xx + RSTI-CC-L56xx	25 - 300	Raychem (Tyco)
630	x		2	RSTI-36Lxx + RSTI-66CP-M16	400 - 630	Raychem (Tyco)
630	x	x	2	CB 12 + CC 12	25 - 300 [1]	nkt cables
630	x		2	AGT 10/630 + CP AGT + AGT 10/630	25 - 240	EUROMOLD
630	x		2	AGTL 10/630 + CP AGT + AGTL 10/630	25 - 240	EUROMOLD
630	x		2	430TB + 300PB	35 - 300	EUROMOLD
630	x		2	400TB/G + 400CP + 400TB/G	35 - 300	EUROMOLD
630	x		2	440TB/G + 400CP + 440TB/G	185 - 630	EUROMOLD

1) larger cross-sections available on request
2) in outgoing feeders > 630 A with enhanced conductor pin for 1250 A: Special coordination required for cable connectors > 630 A with the manufacturer of these connectors as the regards current-carrying capacity of the cable connectors

It is essential to comply with the technical information and assembly instructions of the manufacturers of the cable fittings.

24 KV FEEDER CABLE, SINGLE CONNECTION

630 A, outer cone-type acc. to EN 50181, connection type C,
screw-type contact with internal thread M16x2

Examples:

Rated current Outer-cone A	Panel width /space between conductors 450/138 mm	600/190 mm	Cable connection Screw-type plug Terminal adapter	Surge arrester	Cable cross section mm^2	Manufacturer
Circuit-breaker unit [2] CB						
630	x	x	SET 24	MUT 23	25 - 300	Südkabel
630	x	x	SEHDT 23	MUT 23	300 - 500	Südkabel
630	x	x	RICS-51x9	RDA-xx	50 - 300	Raychem (Tyco)
630	x	x	RICS-51xx		25 - 300	Raychem (Tyco)
630	x	x	RSTI-L56xx		25 - 300	Raychem (Tyco)
630	x	x	RSTI-56Lxx		400 - 630	Raychem (Tyco)
630	x	x	RSTI-L56xx	RSTI-CC-56SA	25 - 300	Raychem (Tyco)
630	x	x	CB 24		25 - 300 [1]	nkt cables
630	x	x	CB 24	CSA 24	25 - 300 [1]	nkt cables
630	x	x	AGT 20/630		25 - 240	EUROMOLD
630	x	x	AGTL 20/630		25 - 240	EUROMOLD
630	x	x	K 400 TB/G	156 S	25 - 300	EUROMOLD
630	x	x	430 TB	300 SA	35 - 300	EUROMOLD
630	x	x	K 400 TB/G		25 - 300	EUROMOLD
630	x	x	K 440 TB/G		185 - 630	EUROMOLD
Switch disconnector unit C						
630	x		SET 24	MUT 23	25 - 240	Südkabel
630	x		SEHDT 23	KU 33 + MUT 33	300 - 300	Südkabel
630	x		RICS-51x9	RDA-xx	50 - 300	Raychem (Tyco)
630	x		RICS-51xx		25 - 300	Raychem (Tyco)
630	x		RSTI-L56xx		25 - 300	Raychem (Tyco)
630	x		RSTI-56Lxx		400 - 630	Raychem (Tyco)
630	x		RSTI-L56xx	RSTI-CC-56SA	25 - 300	Raychem (Tyco)
630	x		CB 24		25 - 300 [1]	nkt cables
630	x		CB 24	CSA	25 - 300 [1]	nkt cables
630	x		AGT 20/630	400 PB	25 - 240	EUROMOLD
630	x		AGTL 20/630	400 PB	25 - 240	EUROMOLD
630	x		K 400 TB/G	156 S	25 - 300	EUROMOLD
630	x		430 TB	300 SA	25 - 300	EUROMOLD
630	x		K 400 TB/G		25 - 300	EUROMOLD
630	x		K 440 TB/G		185 - 630	EUROMOLD

1) larger cross-sections available on request
2) in outgoing feeders > 630 A with enhanced conductor pin for 1250 A Special coordination required for cable connectors > 630 A with the manufacturer of these connectors as regards the current-carrying capacity of the cable connectors

It is essential to comply with the technical information and assembly instructions of the manufacturers of the cable fittings.

24 KV FEEDER CABLE, MULTIPLE CONNECTION

630 A, or 1250 A, outer cone-type acc. to EN 50181, connection type C, screw-type contact with internal thread M16x2 [2)]

Examples:

Rated current Outer-cone A	Panel width /space between conductors 450/138 mm	600/190 mm	Cables per phase	Cable connection Screw-type plug / terminal adapter	Cable cross section mm^2	Manufacturer
Circuit-breaker unit [2)] CB						
630	x	x	2	SET 24 + KU 23.2	25 - 240	Südkabel
2 x 630		170	4	SET 24 + KU 23.2	25 - 240	Südkabel
630	x	x	2	RICS-57xx + RICS-51x7	25 - 300	Raychem (Tyco)
630	x	x	2	RSTI-L56xx + RSTI-CC-L56xx	25 - 300	Raychem (Tyco)
630	x	x	2	RSTI-56Lxx	400 - 630	Raychem (Tyco)
2 x 630	x	170	4	RSTI-L56xx + RSTI-CC-L56xx	25 - 300	Raychem (Tyco)
630	x	x	2	CB 24 + CC 24	25 - 300 [1)]	nkt cables
2 x 630		170	4	CB 24 + CC 24	25 - 300 [1)]	nkt cables
630	x		2	CB 36 + CC 36	300 - 630	nkt cables
630	x	x	2	AGT 20/630 + CP AGT + AGT 20/630	25 - 240	EUROMOLD
630	x	x	2	AGTL 20/630 + CP AGT + AGTL 20/630	25 - 240	EUROMOLD
2 x 630		170	4	AGT 20/630 + CP AGT + AGT 20/630	25 - 240	EUROMOLD
2 x 630		170	4	AGTL 20/630 + CP AGT + AGTL 20/630	25 - 240	EUROMOLD
2 x 630		170	4	430 TB + 300 PB	35 - 300	EUROMOLD
630	x	x	2	430 TB + 300 PB	35 - 300	EUROMOLD
1250		x	3	RSTI-L56xx + 2 x RSTI-CC-L56xx (1250 A)	25 - 300	Raychem (Tyco)
1250		x	2	RSTI-L56xx + RSTI-CC-CP-M16 (1250 A)	400 - 630	Raychem (Tyco)
1250		x	3	CB 24 + 2 x CC 24 (1250 A)	25 - 300	nkt cables
1250		x	2	CB 36 + 2 x CC 36 (1250 A)	300 - 630	nkt cables
Switch disconnector unit C						
630	x		2	K 400 TBS	35 - 300	EUROMOLD
630	x		2	SET 24 + KU 23.2	25 - 240	Südkabel
630	x		2	RICS-57xx + RICS-51x7	25 - 300	Raychem (Tyco)
630	x		2	RSTI-L56xx + RSTI-CC-L56xx	25 - 300	Raychem (Tyco)
630	x		2	RSTI-56Lxx + RSTI-66CP-M16	400 - 630	Raychem (Tyco)
630	x		2	CB 24 + CC 24	25 - 630	nkt cables
630	x		2	AGT 20/630 + CP AGT + AGT 20/630	25 - 240	EUROMOLD
630	x		2	AGTL 20/630 + CP AGT + AGTL 20/630	25 - 240	EUROMOLD
630	x		2	430 TB + 300 PB	35 - 300	EUROMOLD
630	x		2	K 400 TB/G + 400 CP + K 400 TB/G	35 - 300	EUROMOLD
630	x		2	K 440 TB/G + 400 CP + K 440 TB/G	185 - 630	EUROMOLD

1) larger cross-sections available on request

2) in outgoing feeders > 630 A with enhanced conductor pin for 1250 A Special coordination required for cable connectors > 630 A with the manufacturer of these connectors as regards the current-carrying capacity of the cable connectors

It is essential to comply with the technical information and assembly instructions of the manufacturers of the cable fittings.

SELECTION TABLES FOR CABLE CONNECTIONS T1

Transformer feeder T1 (250 A)

250 A, outer cone-type acc. to EN 50181, connection type A, with pin contact Ø 7.9

Examples (for right-angle plug):

Cable type	Manufacturer	12 kV		24 kV	
Plastic-insulated cable		Connector type	for cross-section mm^2	Connector type	for cross-section mm^2
Fully insulated technology	EUROMOLD	158LR	16 - 120 [1]	K158LR	16 - 120 [1]
	EUROMOLD	158LR+MC3-158LR-R02	16 - 120 [1]	K158LR+MC3-158LR-R02	16 - 120 [1]
	EUROMOLD	AGW 10/250	25 - 95	AGW 20/250	25 - 95
	EUROMOLD	AGWL 10/250	25 - 95	AGWL 20/250	25 - 95
	nkt	EASW 20/250	25 - 95	EASW 20/250	25 - 95
	Raychem	RSES-52xx-R	25 - 120	RSES-52xx-R	16 - 120
	Südkabel	SEW 12	25 - 150	SEW 24	25 - 95

Comply with the manufacturers' technical details and instructions for assembly.
[1] 150 mm^2 available on request

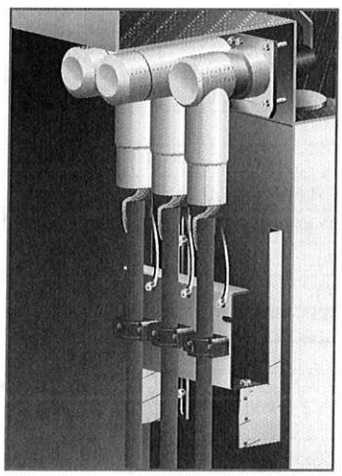

Cable connection T1

Optional with outer-cone according to EN 50181, connection type C, Screw-type contact with internal thread M16x2.

MAIN DIMENSIONS, CABLE CONNECTION

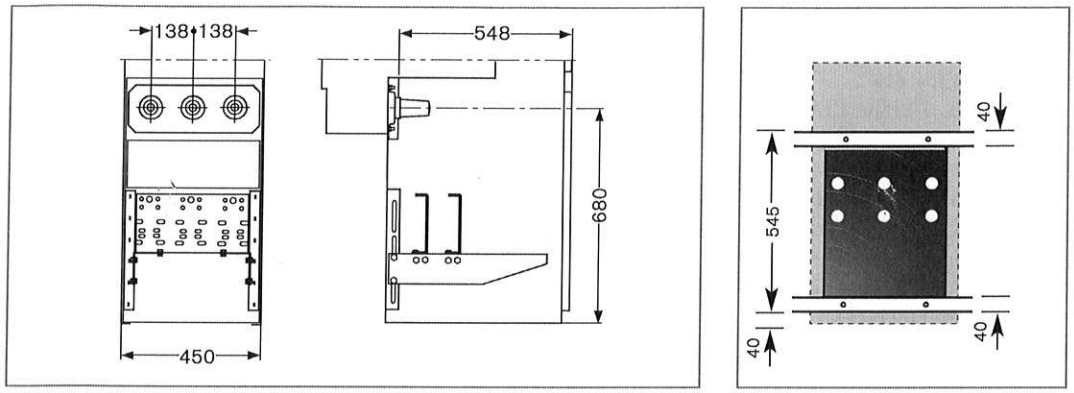

Feeder without current transformer

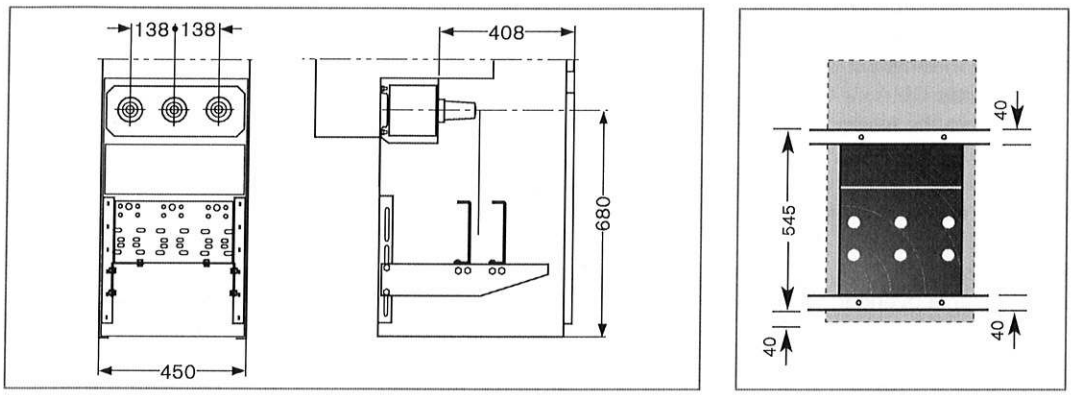

Feeder with current transformer

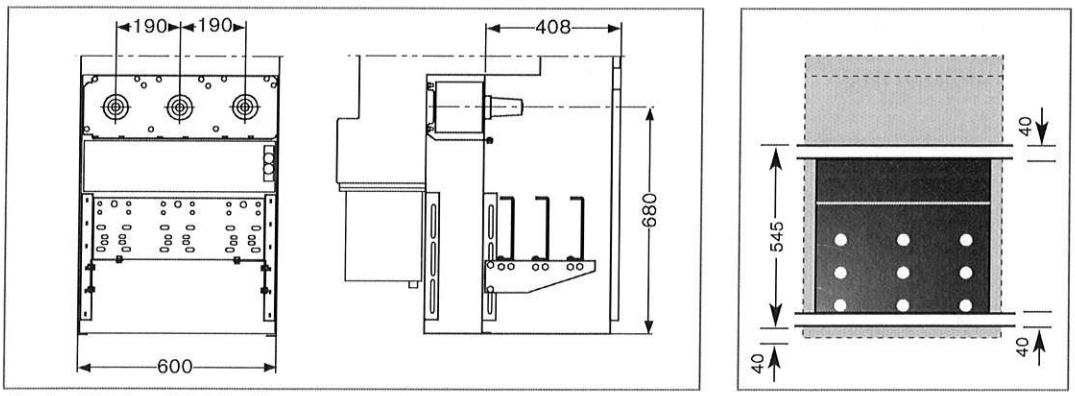

Feeder 630 A to 1250 A with current transformer

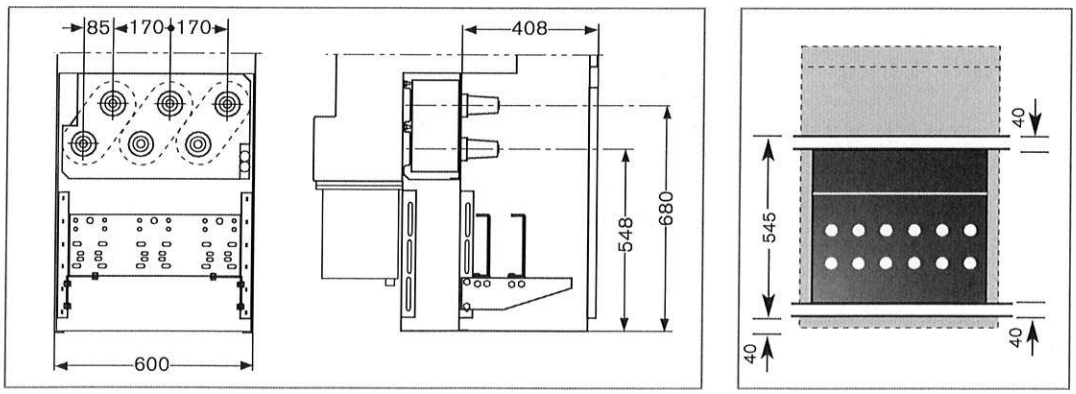

Feeder with 2 outer cone-type bushings per conductor, 1250 A with current transformer

H.V.H.R.C. fuse links

SELECTION OF H.V.H.R.C. FUSE LINKS

This project document is a recommendation of the switchgear manufacturer, as required by the applicable standards. The specified data enables the user to select H.V.H.R.C. fuse links.

To protect distribution transformers, we recommend you use H.V.H.R.C. backup fuses with integrated thermal cut-outs for gas-insulated GMA switchgear, according to the fusing table on page 57.
Due to the thermal cut-out, in case of overload of the H.V.H.R.C. fuse links in the presence of

- > inadmissible overload currents,
- > fuse links damaged previously by transients

there will be a shut-off by the switch disconnector. This prevents thermal overloading of the fuse receiving tube.

Ordering data

The following data must be specified in the Purchase Order:

- > Transformer rated power
- > Transformer operating voltage
- > Rated current of the selected H.V.H.R.C. fuses

Technical data

The technical data have been prepared as on page 57/58 for normal application of switchgear and take all the relevant standards into account.

These standards are:

- > Protection of distribution transformers according to IEC 60787, VDE 0670 Part 402, transformer vector group Dy5
- > Fuse links in acc. with IEC 60282-1
- > Specifications of IEC 62271-105
- > Max. ambient temperature for switchgear: 40 °C according to IEC 60694, identical with max. ambient temperature for the switchgear within the housing of a packaged substation in accordance with IEC 61330.

No transformer operation during overload. The L.V.H.R.C. (low-voltage high rupturing-capacity) fuse links gTr according to VDE 0636, Part 201, can be selected optionally to the H.V.H.R.C. fuse links.
The L.V.H.R.C. fuse links can carry 1.3 times the transformer rated current for min. 10 hours. Shut-off is effected at 1.5 times the transformer rated current within two hours.

High ambient temperature

The fusing table is also valid for a max. ambient temperature of 50 °C, e.g. for the switchgear within the housing of a packaged substation according to IEC 61271-202, for very hot climate conditions.

Temperature-rise limits

The fusing table takes account of the temperature-rise limits within the switchgear enclosure.

Fusing table 2 on page 58 like table 1, however

- > GMA not standard
- > Restrictions regarding data (ambient temperature, transformer making current (inrush) max. normal current, only SIBA fuses).

Selection table of H.V.H.R.C. backup fuse FDwT (AREVA T&D) with integrated thermal cut-out

Transformer operating voltage	Rated voltage range of H.V.H.R.C. fuse link	Gauge D („e") of the H.V.H.R.C. fuse link	Type of switchgear	Transformer rated voltage in kVA							Remarks
				250	315	400	500	630	800	1000	–
				u_k = 4 %				u_k = 6 %			–
				Maximum admissible short-circuit duration = 2 s							
kV	kV	mm		Rated current in A of H.V.H.R.C. fuse links							
6	6/12	292	GMA, 12 kV	50	63	80	100	125	160	1)	1)
10	6/12	292 with adapter 24 kV	GMA, 12 kV	31,5	40	50	63	80	100	125	1)
15	10/24	442 with adapter 24 kV	GMA, 24 kV	25	31,5	31,5	40	50	63	1)	1)
20	10/24	442	GMA, 24 kV	16	25	25	31,5	40	63	63	1)
		L.V.H.R.C. fuse link		Rated power in kVA (of the transformer to be protected)							
0.4	0.4/0.5 kV	NH-gTr	kVA (A)	250 (361)	315 (455)	400 (577)	500 (722)	630 (909)	800 (1155)	1000 (1443)	– –

Rated short-circuit voltage uk and maximum admissible short-circuit time according to IEC 60076, DIN EN 60076-5, VDE 0532 part 5.
This selection table must be used at ambient temperatures ≤ + 50 °C, without overload.
(...) = normal current in A
1) At higher transformer rated powers, project planning must be based on section 2.

Selection tables for H.V.H.R.C. backup fuse SIBA with integrated thermal cut-out for transformers up to 1000 kVA

Transformer operating voltage	Rated voltage range of H.V.H.R.C. fuse link	Gauge D („e") of the H.V.H.R.C. fuse link	Type of switchgear	Transformer rated voltage in kVA							Remarks
				250	315	400	500	630	800	1000	–
				u_k = 4 %				u_k = 6 %			–
				Maximum admissible short-circuit duration = 2 s							
kV	kV	mm		Rated current in A of H.V.H.R.C. fuse links							
6	6/12	292	GMA, 12 kV	50	63	80	100	125	160	1)	1)
10	6/12	292 with adapter 24 kV	GMA, 12 kV	31,5	40	50	63	80	100	125	1)
15	10/24	442 with adapter 24 kV	GMA, 24 kV	25	31,5	31,5	40	50	63	1)	1)
20	10/24	442	GMA, 24 kV	16	25	25	31,5	40	63	63	1)
		L.V.H.R.C. fuse link		Rated power in kVA (of the transformer to be protected)							
0.4	0.4/0.5 kV	NH-gTr	kVA (A)	250 (361)	315 (455)	400 (577)	500 (722)	630 (909)	800 (1155)	1000 (1443)	– –

Rated short-circuit voltage uk and maximum admissible short-circuit time according to IEC 60076, DIN EN 60076-5, VDE 0532 part 5.
This selection table must be used at ambient temperatures ≤ + 50 °C, without overload.
(...) = normal current in A

1) At higher transformer rated powers, project planning must be based on section 2.

Selection tables for H.V.H.R.C. backup fuse SIBA
with integrated thermal cut-out for transformers above 1000 kVA

Transformer operating voltage	**Rated voltage range of H.V.H.R.C. fuse link**	**Gauge D („e") of the H.V.H.R.C. fuse link**	**Type of switchgear**	**Transformer rated voltage in kVA**						**Remarks**
				1000	1250	1600	2000	2500	3000	[2] Max. transformer load only up to 90%
				u_k = 5 %		u_k = 6 %				
				Maximum admissible short-circuit duration = 2 s						
kV	kV	mm		Rated current in A of H.V.H.R.C. fuse links						
6	6-12	442	GMA, 12 kV	**160/**	**200/**	–	–	–	–	
10	6-12	442	GMA, 12 kV	See standard Table	**125/**	**160/**	**200/** [1]	–	–	
15	10-24	442	GMA, 12 kV	**63**-80/	**80**-100/	**125/**	–	–	–	
20	10-24	442	GMA, 12 kV	See standard Table	**80/**	**100/**	**100SSK/**	**125SSK/** [1), 2)]	–	

1) must be specified expressly in orders
2) max. transformer utilization rate 0.9 x rated/nominal power of transformer

SELECTION OF H.V.H.R.C. FUSE LINKS

Backup fuses

If other brands are used, it must be ensured that the fuse links meet the following requirements:

- IEC 60282-1 with dimension in accordance with data sheet I (design I)
- to striker type "medium" with max. initial tripping force 80 N.

Backup fuses

If backup fuses without integrated striker tripping and thermal cut-out feature are used, the following normal requirements must be satisfied:

- In case of overload currents, shut-off is effected by the L.V.H.R.C. fuse links, as indicated on page 57/58.
- In case of switchgear installed in an exposed location, where fuse links may be subject to previous damage caused by transients (e.g. due to lightning impulse currents), replacement of all fuse links must be ensured by appropriate maintenance intervals.

If these requirements are not satisfied, only H.V.H.R.C. backup fuse links with integrated striker tripping and cut-out feature must be used in the gas-insulated GMA switchgear to protect the switchgear against thermal overload. The following series of the H.V.H.R.C. fuse link suppliers offering integrated striker tripping with thermal cut-out feature are admissible (see Table on the right):

Gauge for fuse links

Switchgear for the following dimensions "D" or "e" of the fuse links:

Type-designation	**Fuse gauge „D" or „e" in mm**
GMA./12-2/... with adapter 24 kV or 442	292
GMA./24-2/...	442

General-purpose fuses

General-purpose fuses are recommended for the exceptional case in which the switch disconnector is to be equipped with a snap-action drive SFU (instead of stored-energy mechanism SF), so that all-pole fuse tripping is impossible.

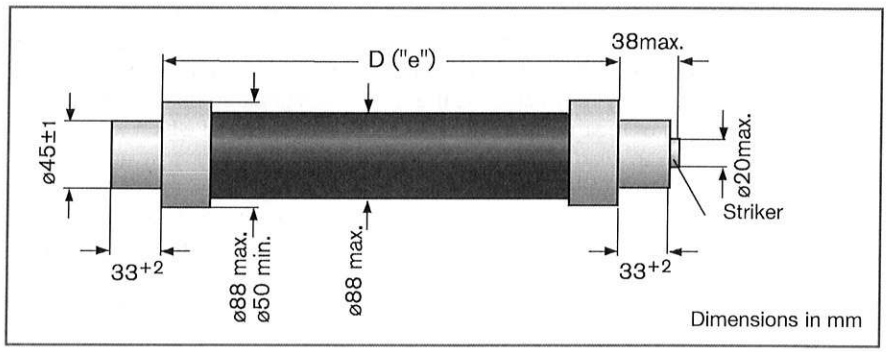

Series	**Supplier**
H.V.H.R.C. fuse links with thermal cut-out	AREVA
H.V.H.R.C. fuse links with thermal cut-out	SIBA
H.V.H.R.C. backup fuses with overload release (thermal cut-outs)	EFEN
H.V.H.R.C. fuse links Type IKUS with thermo-striker	JEAN MÜLLER

Environmentally compatible design

The GMA switchgear satisfies to a high degree the ecological requirements in view of environmental protection thanks to

- optimization of material and energy consumption during manufacture
- compliance with all ecological requirements during its service life
- the use of recyclable materials for the re-use or efficient disposal at the end of its service life.

Our design directives regarding environmentally compatible design specify the use of materials which are easily recyclable and can be disassembled.

The metals which make up approx. 90% of the switchgear are easily recyclable. At the end of their service life, they are recycled 100 % in the form of homogenous materials.

Plastics can also be recycled. Thermosetting – i.e. non-melting – plastics can be comminuted and reused as fillers in other plastic components; thermoplastic - i.e. melting - materials can be recycled in the form of homogenous material. This means that the material is conserved, melted down and used for the construction of new durable parts.

To ensure efficient and environmentally compatible disassembly and assignment of materials by the experts in charge of recycling or disposal, the switchgear's plastic components have been identified accordingly. Moreover, material and utilization data sheets are available to provide the customer with an overview of the materials used, and the disposal company with important information regarding the recycling process. Thus, the materials used for our products can be reused 100 %.

This represents a major contribution towards saving primary energy and material resources.

All materials were selected and developed so that e.g. in case of fire within buildings, affected switchgear only have a minor influence on the fire load (heat development, pollutants in the emissions).

Another important ecological aspect is the longevity of our products (30 to 40 years), which is an extremely long service life compared to other capital goods. Furthermore, the switchgear units have been designed so as to require little maintenance which would in turn use up energy and material, and so as to enable straightforward replacement of part components, e.g. if new controllers have been developed on the market (upgrading).

In our gas-insulated switchgear GMA, the majority of the switchgear panel has been sealed hermetically in an insulating inert gas (sulphur hexafluoride SF_6 which is neither reactive nor toxic). Thus, all environmental influences are kept outside. The particular characteristics of the insulating gas also enable the overall size to be decreased by approx. 50 % versus switchgear designed without insulating gas with comparable technical properties. This saves a lot of material and energy required for material production. The portion of insulating gas used for GMA switchgear amounts to approx. 0.5 percent by weight. Once the switchgear's service life has elapsed, the gas is recovered completely via the disposal valve provided serially in each gas-filled compartment, and then recycled. The gas suppliers have developed an efficient recycling concept to this effect.

During normal operation, the gas need not be replenished during the entire service life of the switchgear. The switchgear is a hermetically sealed pressure system acc. to IEC 60694 (IEC 62271-1).

Average material distribution in gas-insulated switchgear units

Materials		Weight %
Metals	Steel	80
	Copper	6.5
	Aluminium, Brass	2
Plastics	Thermosets	7
	Thermo-plastics	2
	Elastomers	0.5
Elektronic	Plastics	0.5
	Metals	1
Insulating gas	sulphur hexafluoride	0.5

Design data

MAIN DIMENSIONS

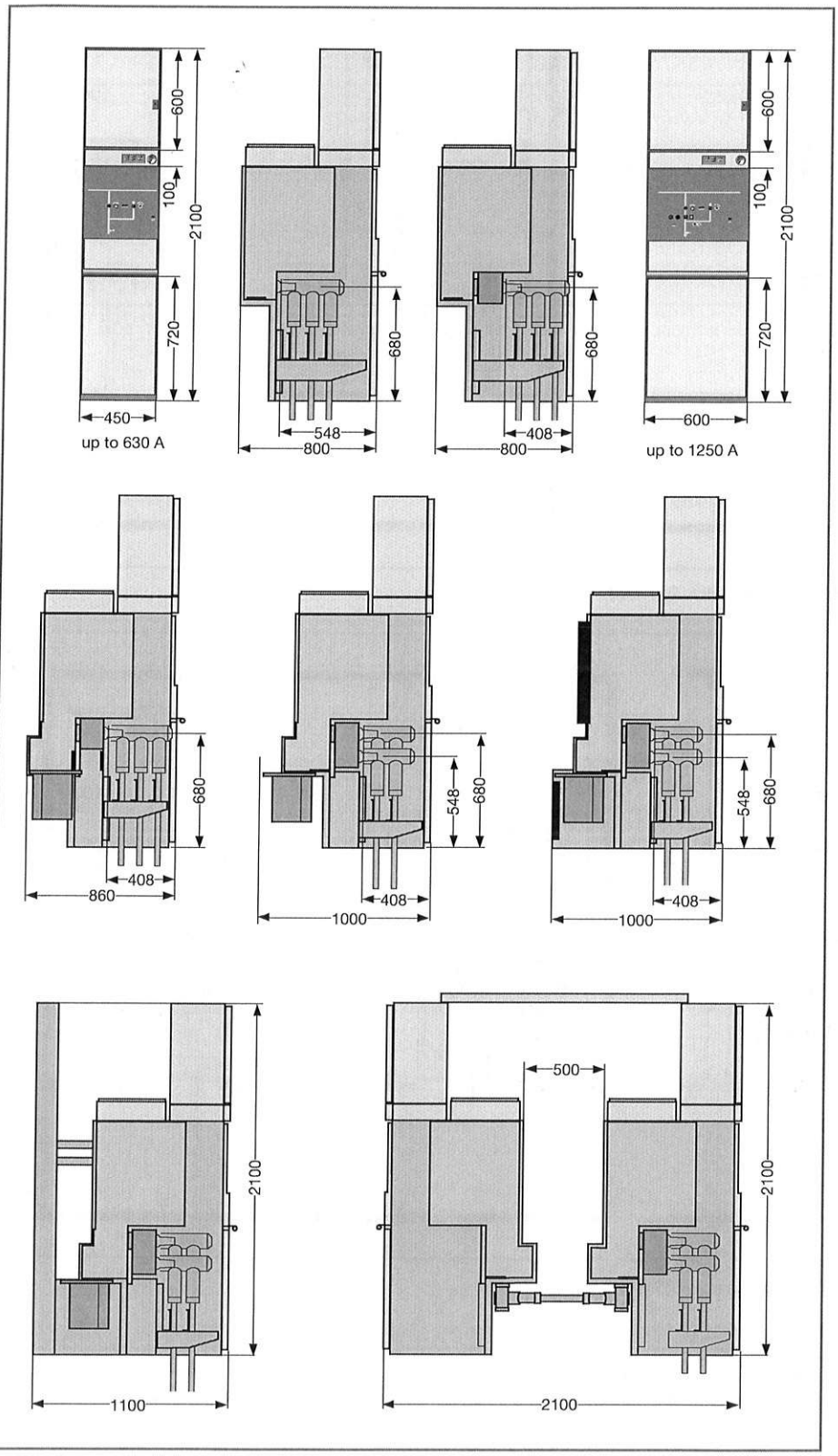

PANEL DEPTHS

Minimum dimensions within the building

Examples in accordance with IEC 62271-200, internal arc classification IAC AFL with minimum room height

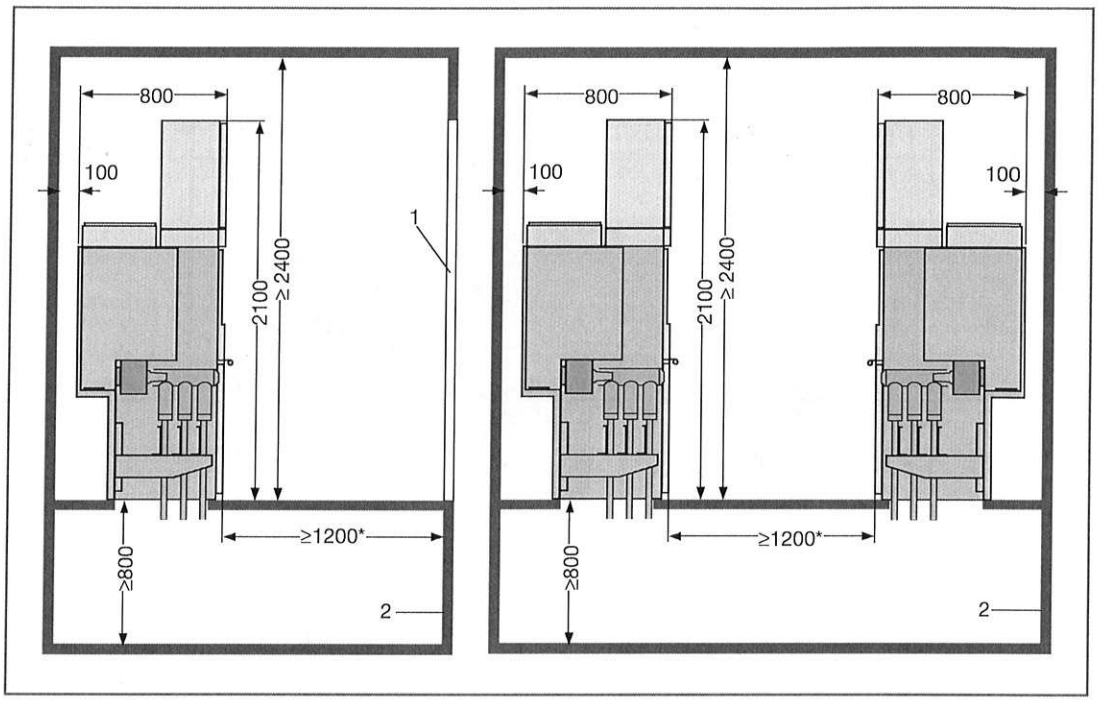

Rated short time withstand current ≤ 16 kA/1s

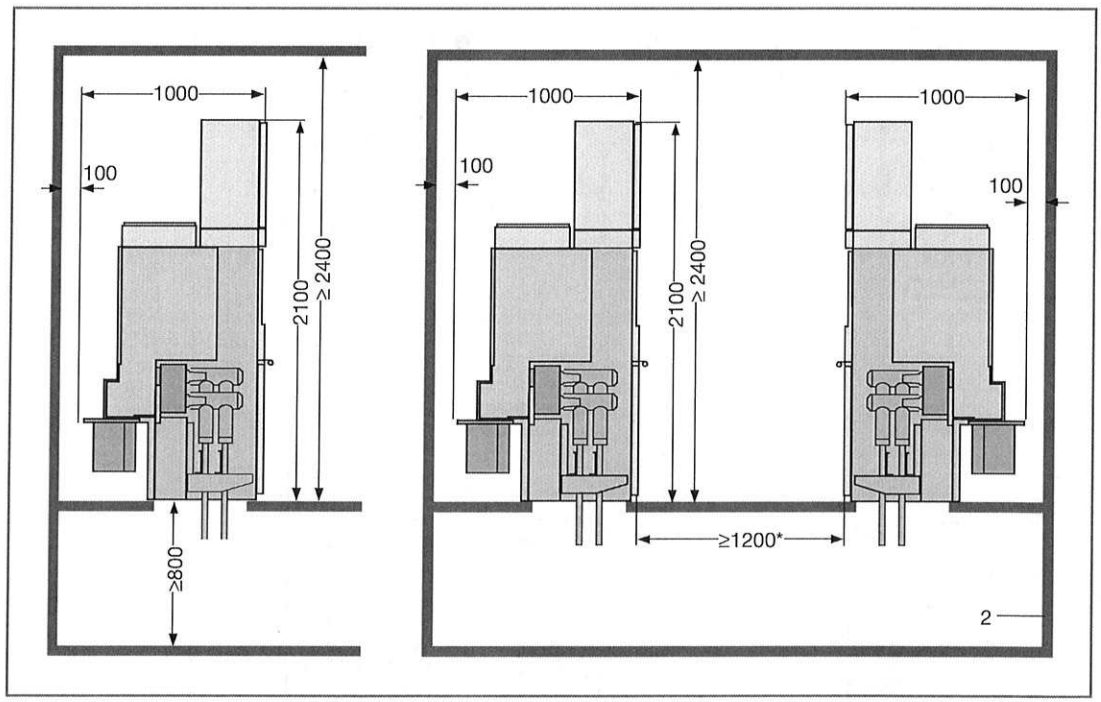

Rated short time withstand current ≤ 25 kA/1s

1 Opening for placing the unit
Width ≥ 1100, Height ≥ 2300
(in case the specified dimensions are not reached without LV cabinets)
2 Cable duct or basement depending on the admissible minimum bending radius of the high-voltage cables

**) Width, also for the possible replacement of modules. Smaller dimensions available on request*

SPACE REQUIRED

Examples: Free-standing installation
with pressure relief duct in accordance with IEC 62 271-200,
internal arc classification IAC AFLR with minimum room height

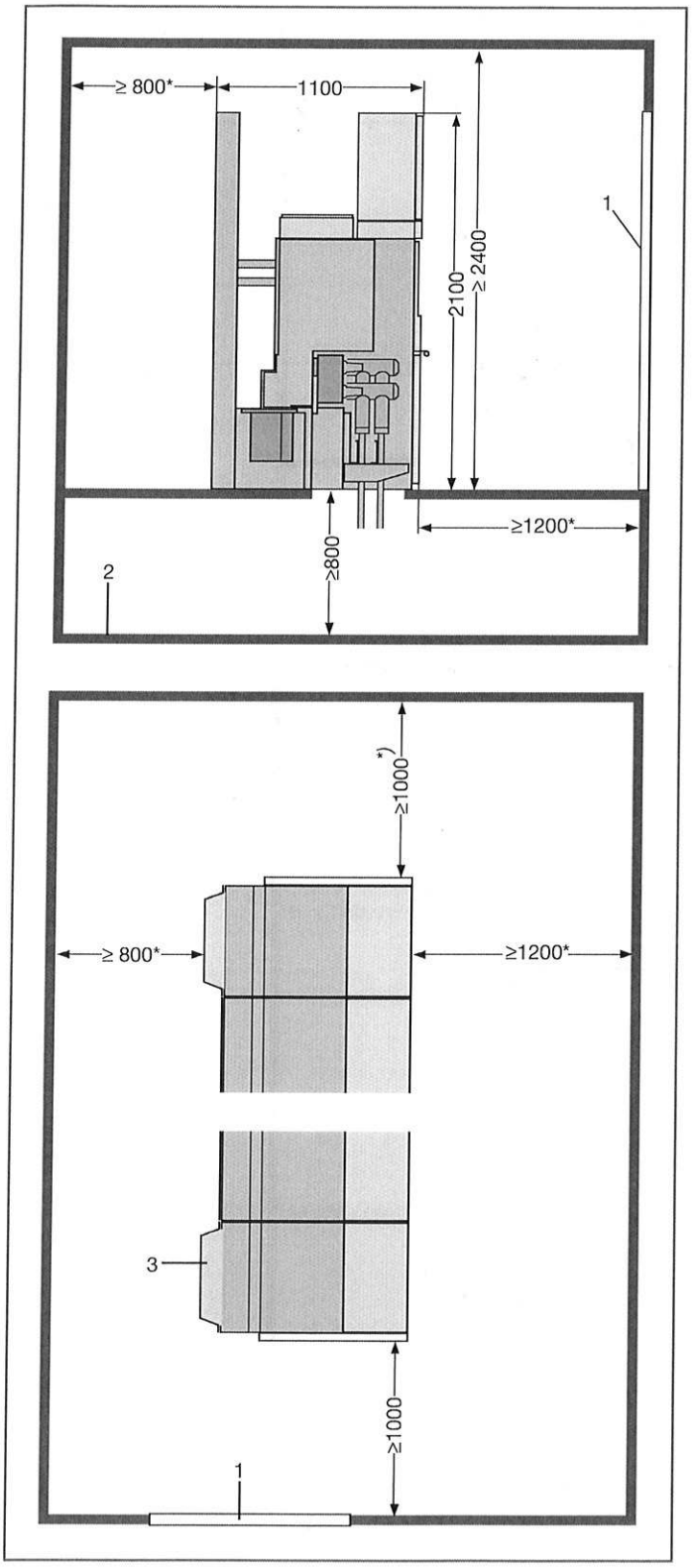

1 Opening for placing the unit
Width ≥ 1100, Height ≥ 2300
(in case the specified dimensions are not reached without LV cabinets)2
Cable duct or basement depending on the admissible minimum bending radius of the high-voltage cables
3 One pressure relief duct for 10 panels each

**) Width, also for the possible replacement of modules. Smaller dimensions available on request*

Free-standing installation
Rated short time withstand current 25 kA/1s

Examples: Free-standing installation, face-to-face
with pressure relief duct in accordance with IEC 62 271-200,
internal arc classification IAC AFLR with minimum room height

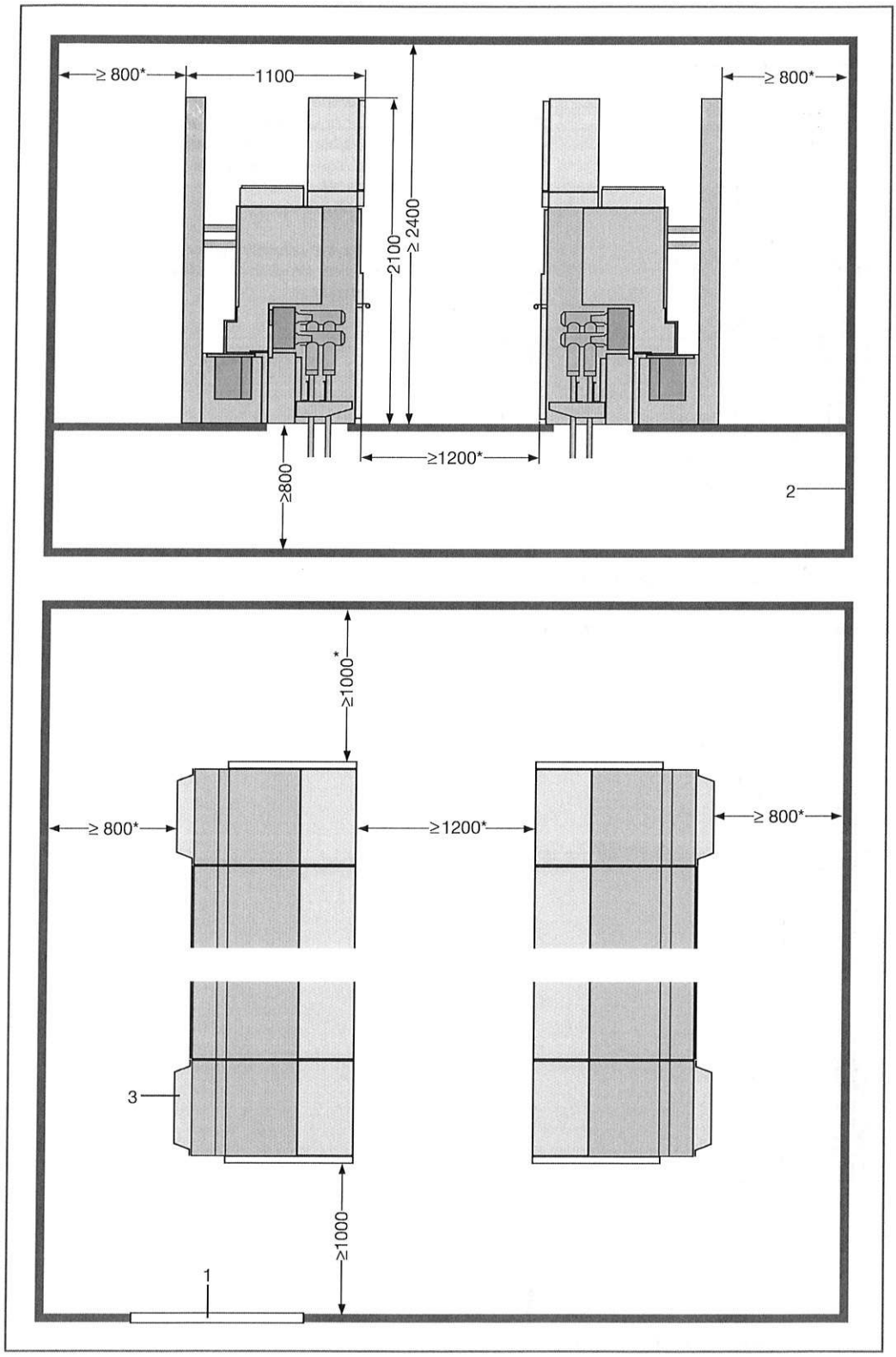

Free-standing installation, face-to-face
Rated short time withstand current 25 kA/1s

1 Opening for placing the unit
Width ≥ 1100,
Height ≥ 2300
(in case the specified dimensions are not reached without LV cabinets)
2 Cable duct or basement depending on the admissible minimum bending radius of the high-voltage cables
3 One pressure relief duct for 10 panels each

**) Width, also for the possible replacement of modules. Smaller dimensions available on request*

Installation example with face-to-face installation and underfloor connection via a fully insulated bus system

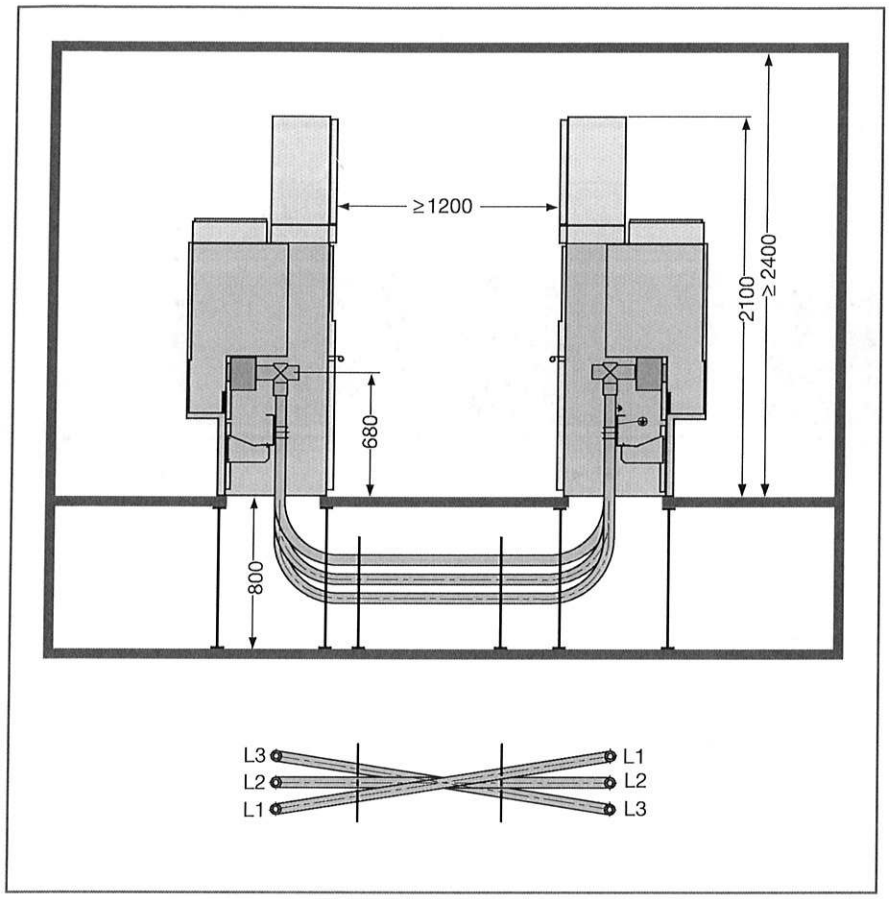

Fully insulated bus system

Ceiling ducts and spacer bars for installation
16 kA to 25 kA/1s, 630 A to 1250 A

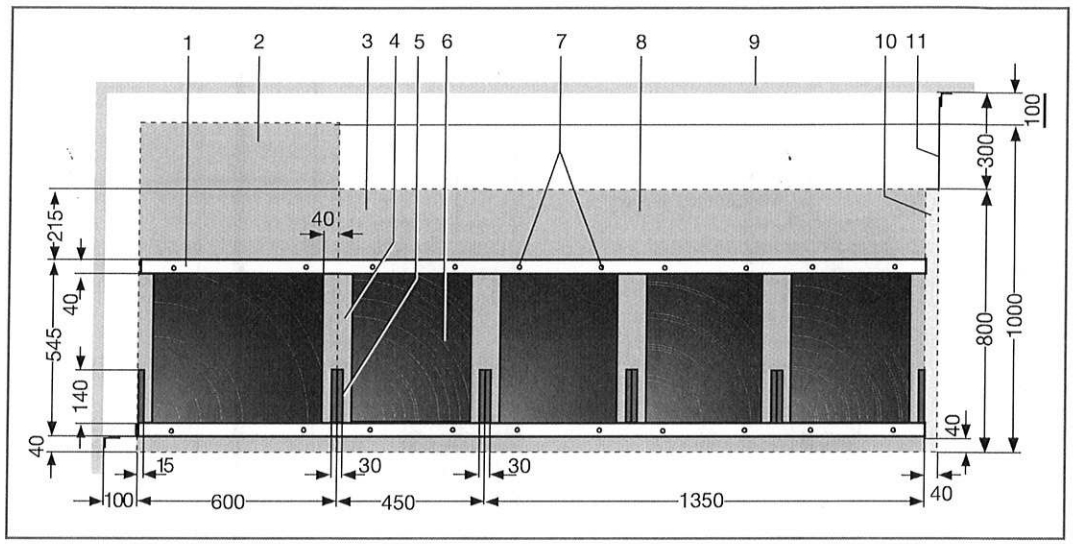

1 Steel spacer bars 40 x 40 x 4 mm
2 Floor area of panel (600 x1000 mm)
3 Floor area of panel (450 x 800 mm)
4 Optional area for cross-bracing
5 Opening for low-voltage cables
6 Opening for primary cables
7 Fastening bore-holes
8 Floor area, 3-unit module (1350 x 800 mm)
9 Building wall
10 Side wall
11 Gap cover (available on request)

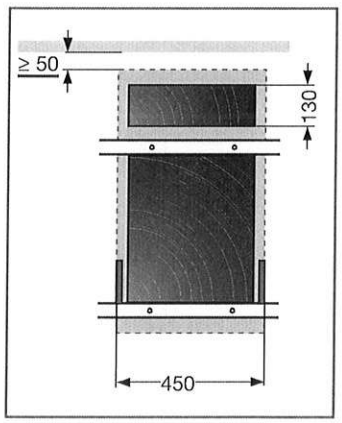

In case of complete pressure relief downwards: additional celing duct for wall clearance ≥ 50 mm (up to 16 kA).

PRESSURE RELIEF VERSIONS

Installation examples for walk-in stations

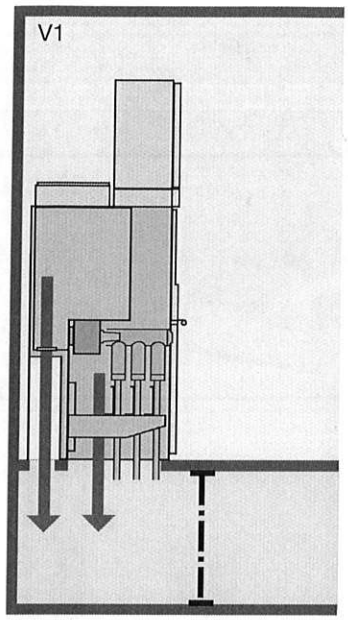

V1 - Pressure relief downwards in case of clearance to building wall ≥ 50 mm
Rated short-time current:
≤ 16 kA/1s

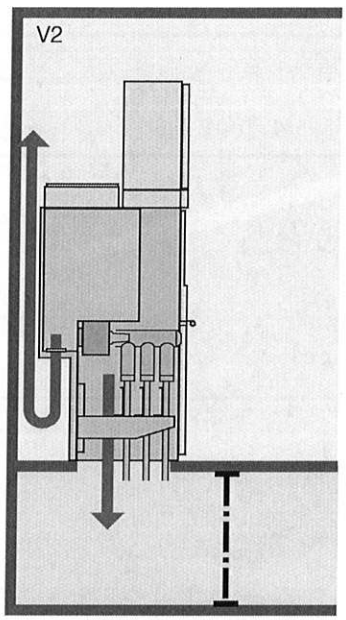

V2 - Pressure relief downwards and to the rear / upwards from the gas-filled compartment.
Clearance to building wall
≥100 mm
Rated short-time current:
up to 25 kA/1s
> 20 kA with gas cooler

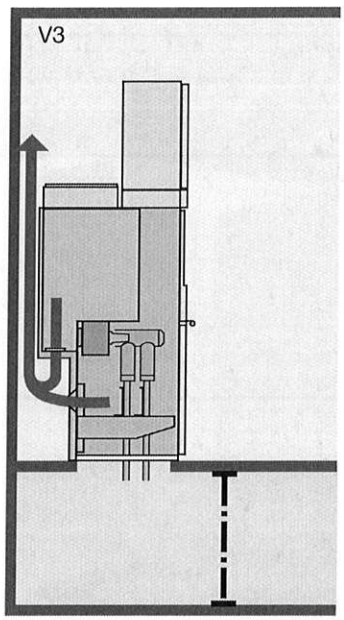

V3 - Pressure relief to the rear / upwards in case of installation of bottom plates or concrete floor with core holes.
Clearance to building wall ≥100 mm
Rated short-time current:
up to 25 kA/1s
In case of > 20 kA with gas cooler

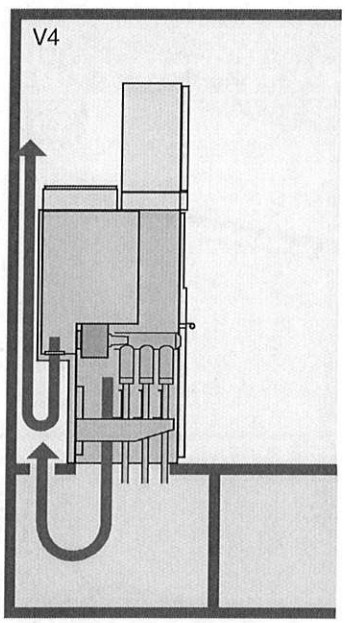

V4 - Pressure relief to the rear / upwards out of the gas-filled compartment I and out of the cable connection compartment downwards and to the rear / upwards
Rated short-time current:
up to 25 kA/1s
In case of > 20 kA with gas cooler

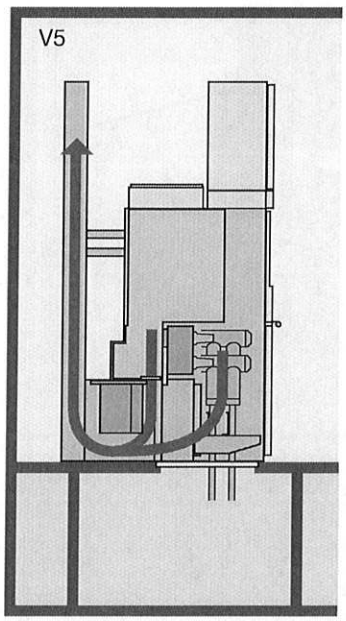

V5 - Free-standing installation: Pressure relief to the rear / upwards in pressure relief duct in case of installation of bottom plates or concrete floor with core holes
Rated short-time current:
up to 25 kA/1s
In case of > 20 kA with gas cooler

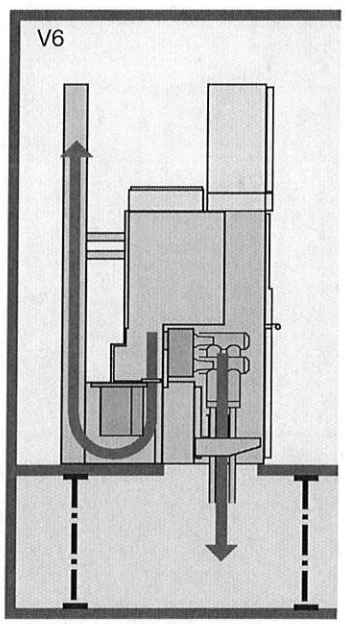

V6 - Free-standing installation: Pressure relief to the rear / upwards out of the gas-filled compartment in the pressure relief duct and downwards out of the cable connection compartment
Rated short-time current:
up to 25 kA/1s
In case of > 20 kA with gas cooler

GMA Double busbar switchgear

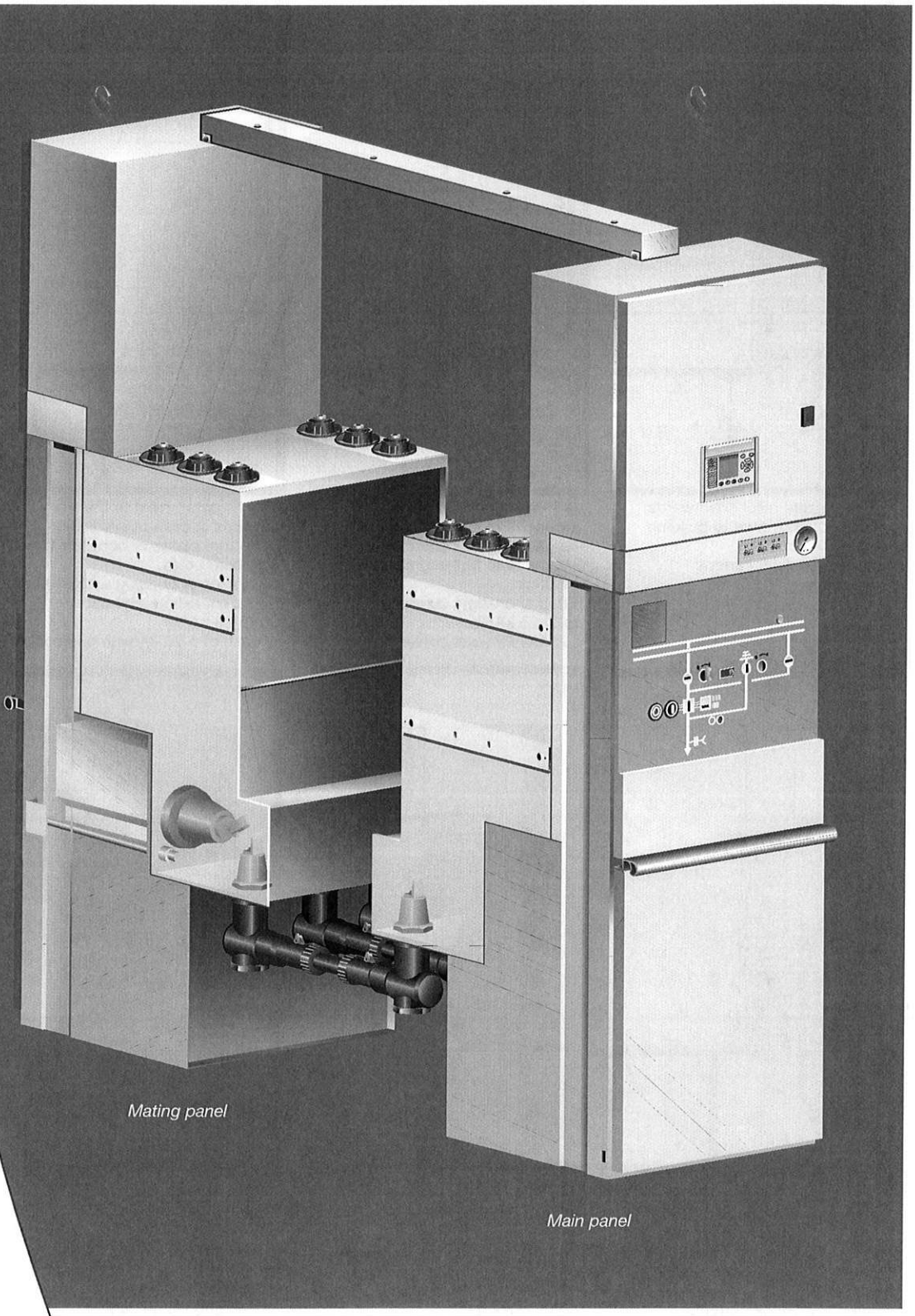

FEATURES

GMA Double busbar switchgear

The GMA double busbar switchgear is an especially economical solution for the replacement of used switchgear or for double busbar switchgear in switchgear rooms with very low ceiling height.

On principle, all the properties and technical data apply as to the single busbar GMA described above. The design consists of two GMA panels which are arranged back-to-back with a common vacuum circuit-breaker, and connected electrically.

Depending on the components fitted in the various panels, double busbar panels are created for the following functions:

- **Circuit-breaker panel** with busbar isolator 1 and busbar isolator 2
- **Incoming feeder / bus coupler combination** with 2 circuit-breaker panels and 2 busbar isolators
- **Bus coupler** with 1 circuit-breaker panel and 2 busbar isolators

Series GMA single busbar switchgear can also be lined up as single panels or modules between the conventional double busbar panels described above.

For example, to implement a **bus sectionalizer** or **bus section coupler**, two single busbar panels are interconnected directly. With the bus coupler switched ON, one branch circuit panel can be switched over to the other switchgear without interruption of the power supply.

As a rule, the main panel side of the double busbar switchgear is comprised of the circuit-breaker modules.

The main panel side is also defined with busbar 1 and also forms the main operator side for the mechanical operator interface.

The main panel's switching devices can be actuated mechanically from the main operator side. At the same time, the switching states of the switching devices of the double busbar outgoing feeder panel are displayed on this main operator side. Here, the switching states of the main panel are displayed mechanically, those of the mating panel by electrical position indicators.

Optionally, the two low-voltage cabinets of the "back-to-back" combination can be used to fit the protection and control devices into the switchgear. The individual switching devices of the GMA series can all be equipped with motor drive mechanisms, enabling fully automatic control of the double busbar switchgear. Control lines can be routed into the low-voltage cabinets, depending on their volume, either from the bottom through the vertical section or directly from above.

The rear high-voltage connection between the "back-to-back" panels is effected with a fully insulated bus connection. This bus connection has been designed accordingly with a shield which is to be earthed. Thus, this switchgear section is also touch-proof.

The switching devices in the mating panel are actuated mechanically via its control panel. GMA double busbar switchgear units are always implemented via single modules with a module width of 600 mm.

DOUBLE BUSBAR SWITCHGEAR UP TO 1250 A

Busbar 1 and busbar 2 in back-to-back arrangement

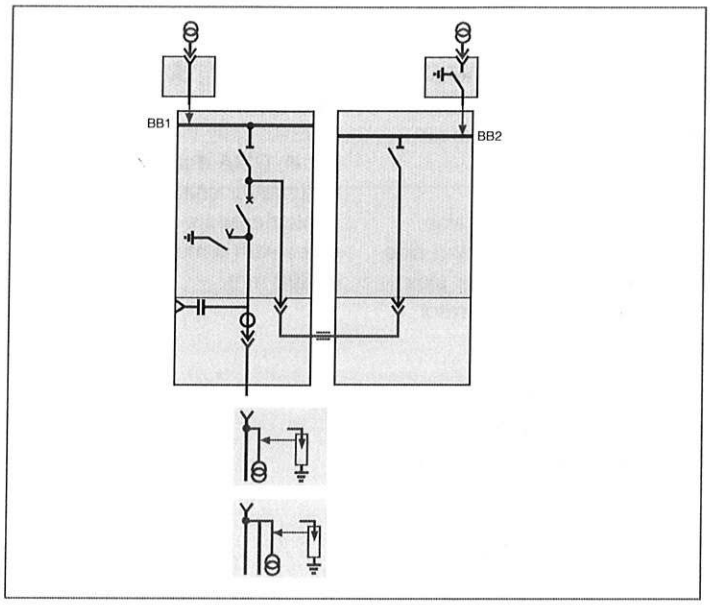

Circuit-breaker feeder

Busbar 1 main panel with
- disconnector
- circuit-breaker
- earthing switch
- toroidal-core current transformer
- capacitive pick-offs

Busbar 2 mating panel with
- disconnector

Optionally available:
- earthing switch
- busbar voltage transformer without or with isolating device

Outer cone-type cable connector: [1]
- single cable connector
- double or single with surge arrestor

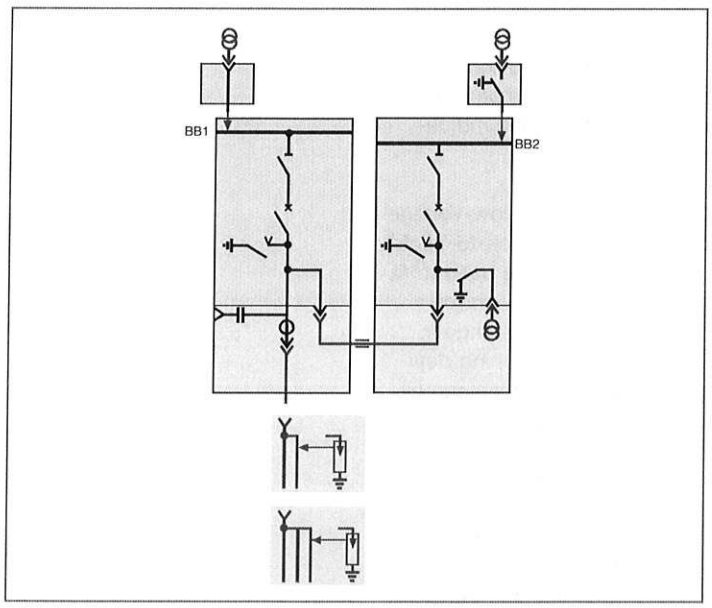

Incoming feeder / bus coupler combination

Busbar 1 main panel with
- disconnector
- circuit-breaker
- earthing switch
- toroidal-core current transformer
- capacitive pick-offs

Busbar 2 mating panel with
- circuit-breaker

Optionally available:
- disconnector and earthing switch
- busbar voltage transformer without or with isolating device
- disconnectable voltage transformers in outgoing feeder

Outer cone-type cable connector: [1]
- single cable connector
- double or single with surge arrestor
- triple or double with surge arrestor

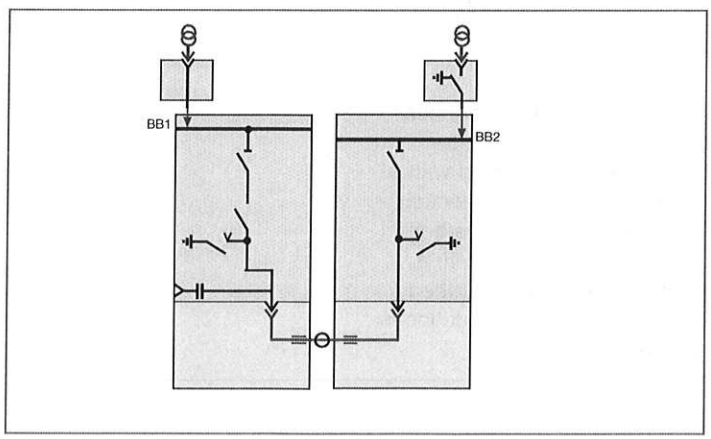

Bus coupler

Busbar 1 main panel with
- disconnector
- circuit-breaker
- earthing switch
- capacitive pick-offs

Optionally available:
- toroidal-core current transformer

Busbar 2 mating panel with
- disconnector

Optionally available:
- earthing switch
- busbar voltage transformer without or with isolating device

[1] in acc. with EN 50181 connector type C with reinforced conductor pin for 1250 A

MECHANICAL OPERATOR INTERFACES
Double busbar switchgear

Example: Circuit-breaker feeder

Switchgear panel BB1 | Switchgear panel BB2

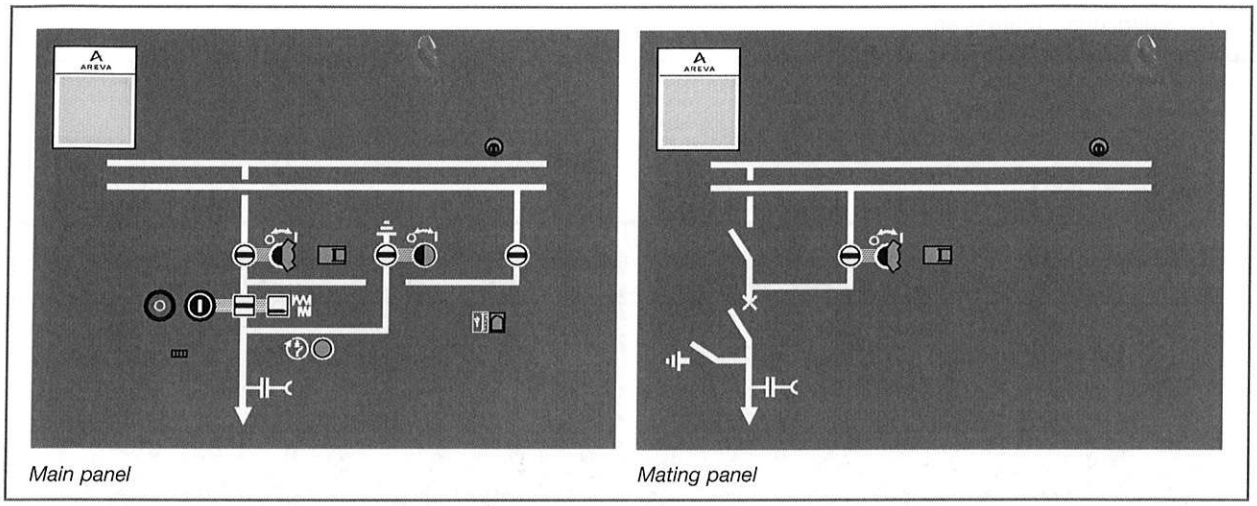

Main panel | *Mating panel*

Example: Incoming feeder / bus coupler combination

Switchgear panel BB1 | Switchgear panel BB2

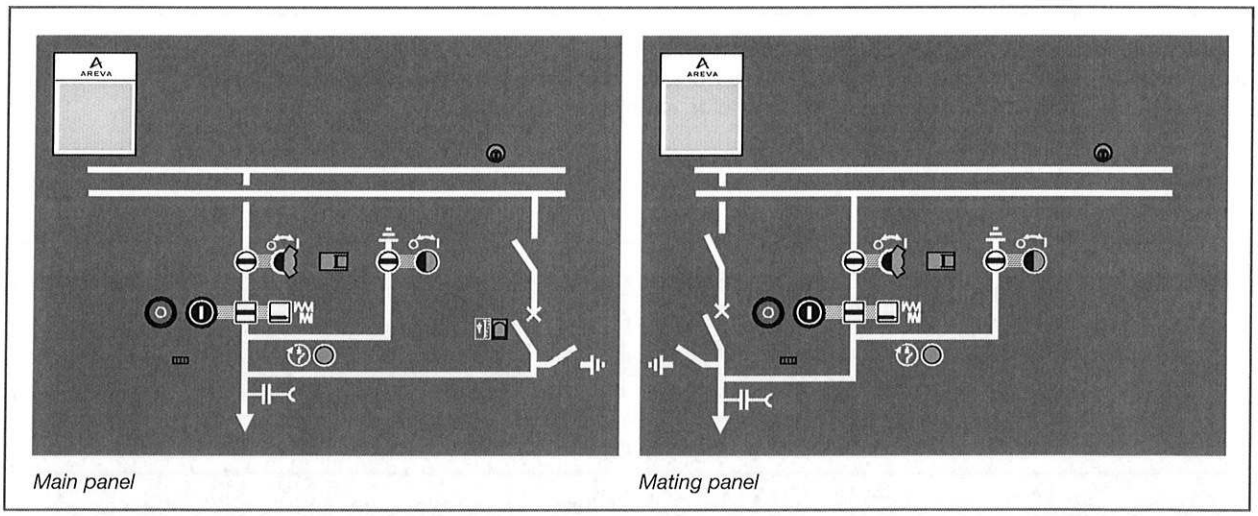

Main panel | *Mating panel*

Depending on the switchgear configuration, interlocking facilities and procedures, changeover with uninterrupted power supply between busbar 1 and busbar 2 can be performed with the bus coupler closed.

MECHANICAL OPERATOR INTERFACES
Double busbar switchgear

Example: Bus coupler

The design is identical with the bus section coupler in single busbar switchgear. There is an operator interface for busbar system 1 and an operator interface for busbar system 2.

Bus coupler BB1

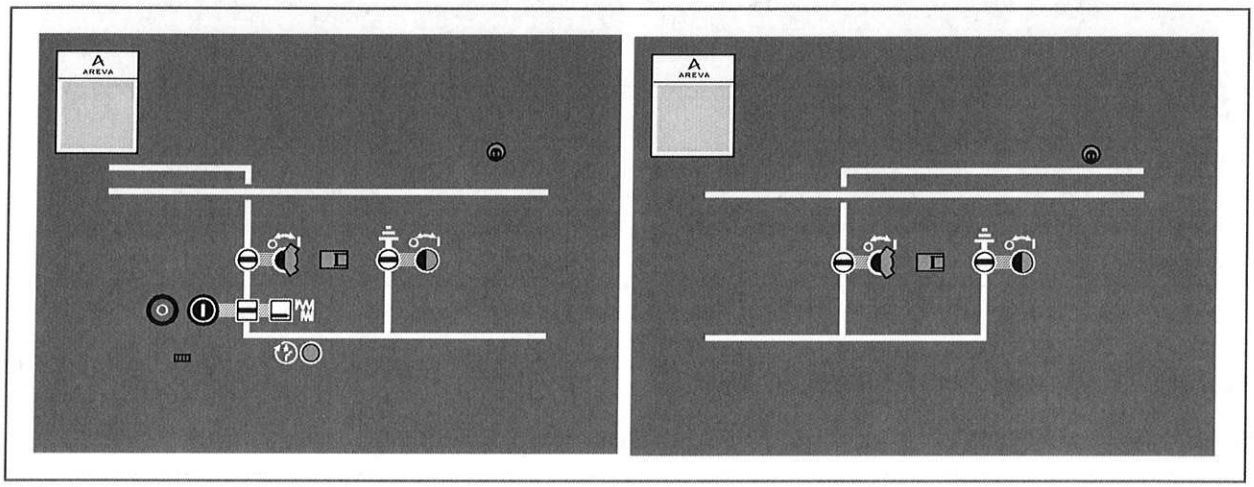

Operator interface for bus section coupler in busbar system 1
Circuit-breaker panel, left-hand, consisting of circuit-breaker, disconnector and earthing switch (option)
Bus riser panel, right-hand, consisting of disconnector, earthing switch (option)

Bus coupler BB2

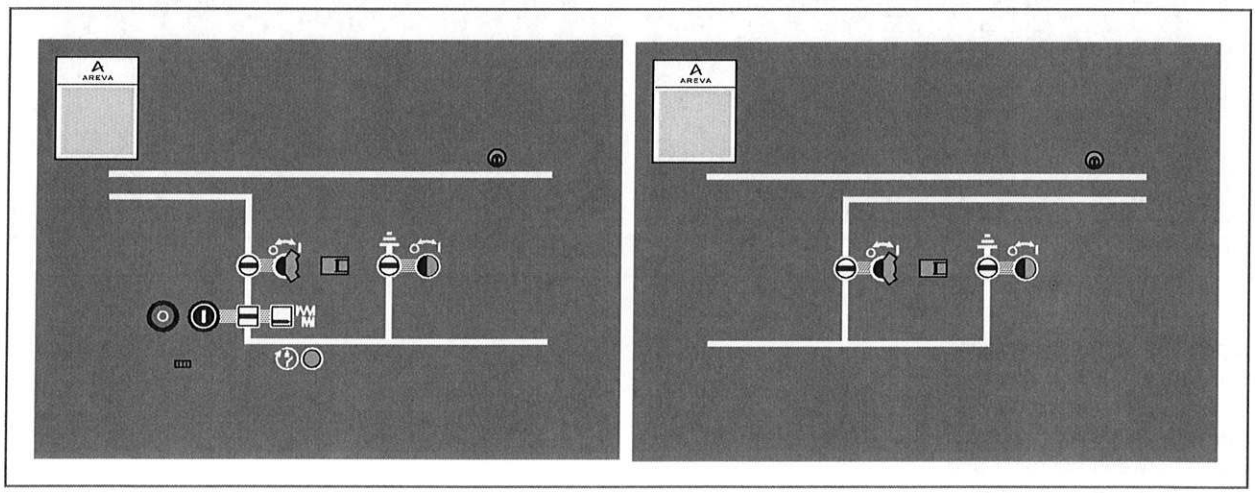

Operator interface for bus section coupler in busbar system 2
Circuit-breaker panel, left-hand, consisting of circuit-breaker, disconnector and earthing switch (option)
Bus riser panel, right-hand, consisting of disconnector, earthing switch (option)

SPACE REQUIRED
for double busbar switchgear

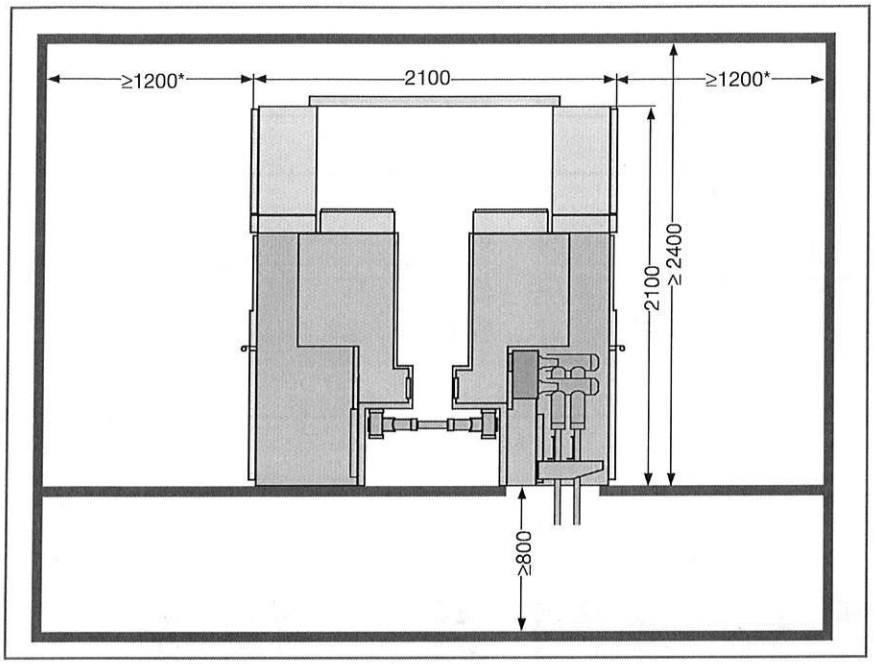

* Width, also for the possible replacement of modules;
modifications possible on request

PRESSURE RELIEF
Version in case of double busbar switchgear GMA

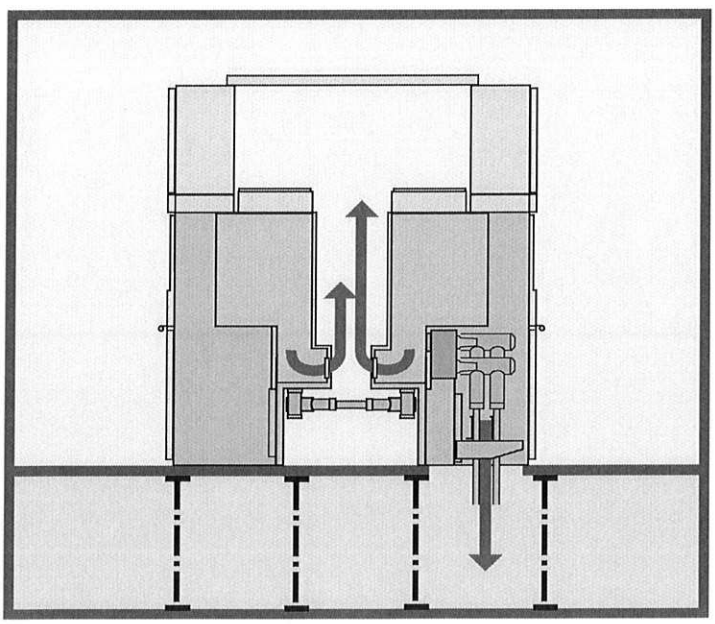

Pressure relief to the rear / upwards between the switchgear panels,
and downwards, out of the cable compartment

CEILING DUCTS AND SPACER BARS FOR INSTALLATION

for double busbar switchgear

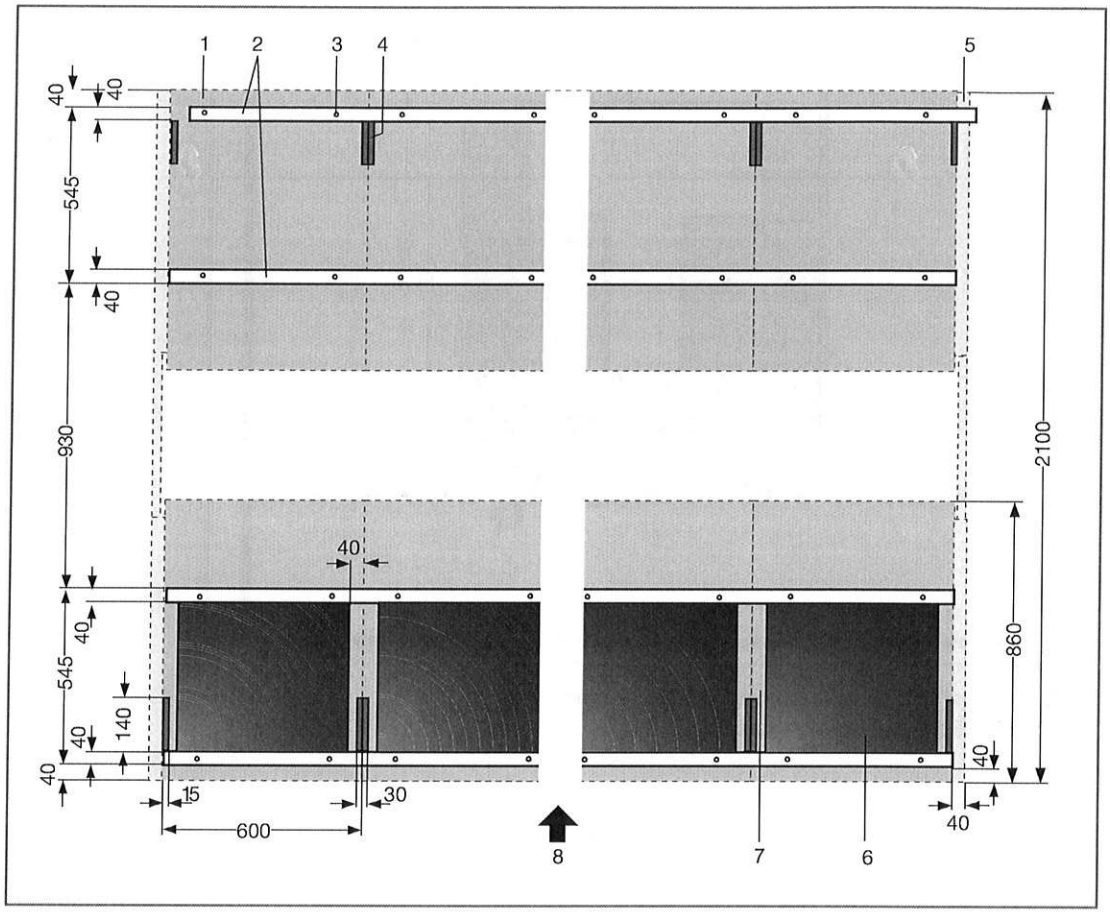

1 Floor area of switchgear
2 Steel spacer bars 40 x 40 x 4 mm
3 Panel fastening points
4 Opening for secondary lines
5 Side wall
6 Opening for primary cables

Options:
7 Area for cross-bracing
8 Main operator side of switchgear

Shipping instructions

TRANSPORTING THE SWITCHGEAR UNIT

When transporting the switchgear unit, it must be ensured that the transport units do not slip or tilt (if necessary, nail transport pallet down to the loading surface). Re-use the original packaging to store parts which have been unpacked for inspection.

Packaging of the switchgear

> If packed for truck transport, the switchgear unit is delivered on a pallet with PE protective film.
> For sea-worthy transport, the units are packed in sealed aluminium film with desiccant and in a closed case with tightly closed wooden base.
> In case of air transport, the switchgear unit is packed in a wooden crate with closed wooden base and with a blister PE film as dust protection or in a wooden case, also with closed wooden base.

Transport to the site of installation

Store under conditions admissible for switchgear operation. Avoid condensation.

During transport, it is essential to prevent any lateral parallel motion of the switchgear (if necessary, using supports).

During transport to the site of installation, it must be taken into account that the main weight is located in the top section of the switchgear – "top-heavy".

Transport using a forklift truck:
Only transport the switchgear on a pallet.
Attention – "top-heavy"!

Transport without pallet:
The crane mounting harness must be hooked into the jack rings of the switchgear.

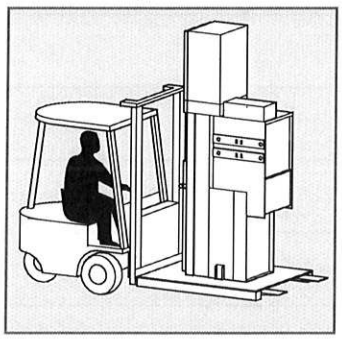

Transport with pallet on forklift truck

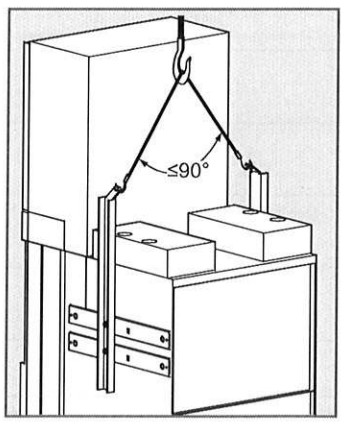

Transport by crane

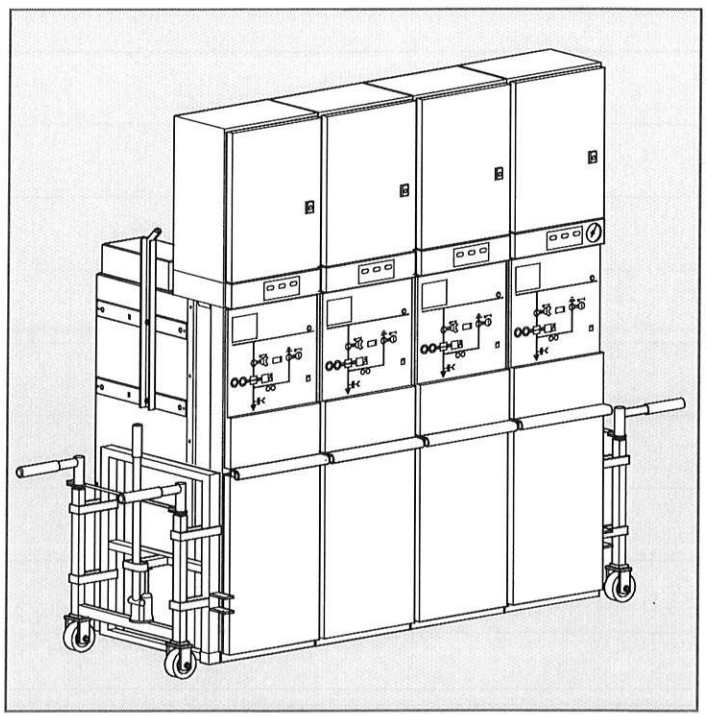

Transport by means of lift trolley

Notes:

Notes:

Notes:

AREVA Energietechnik GmbH, Sachsenwerk Mittelspannung
Rathenaustraße 2 · D-93055 Regensburg · Postfach 10 01 55 · D-93001 Regensburg
Phone +49 (0)9 41/46 20-0 · Fax +49 (0)9 41/46 20-4 18

AREVA T&D Worldwide Contact Centre:
http://www.areva-td.com/contactcentre/
Tel.: +44 (0) 1785 250 070

www.areva-td.com

SYSTEMS-L4-FACTS-1016-EN-2- © - AREVA - 2007. AREVA, the AREVA logo and any alternative version thereof are trademarks and service marks of AREVA.
All trade names or trademarks mentioned herein whether registered or not, are the property of their owners. - 388191982 RCS PARIS
Our policy is one of continuous development. Accordingly the design of our products may change at any time. Whilst every effort is made to produce up to date literature, this brochure should only be regarded as a guide and is intended for information purposes only. Its contents do not constitute an offer for sale or advise on the application of any product referred to in it. We cannot be held responsible for any reliance on any decisions taken on its contents without specific advice.

AGSIE0633-01
Stand 1107