It is forbidden to copy, distribute, pass over without permission.
All rights of this document are reserved

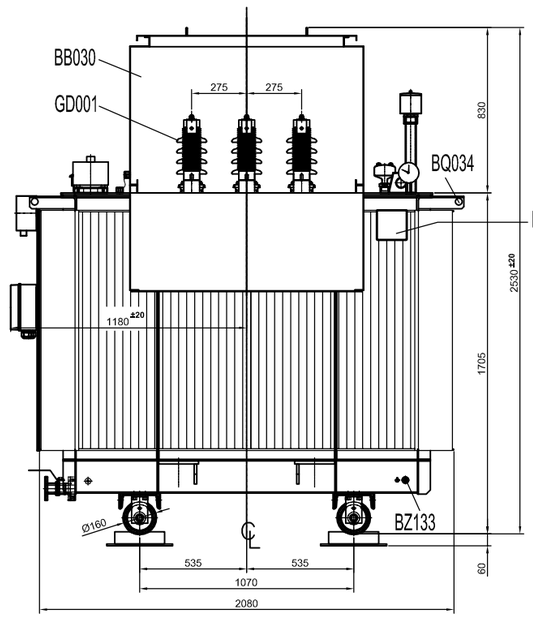

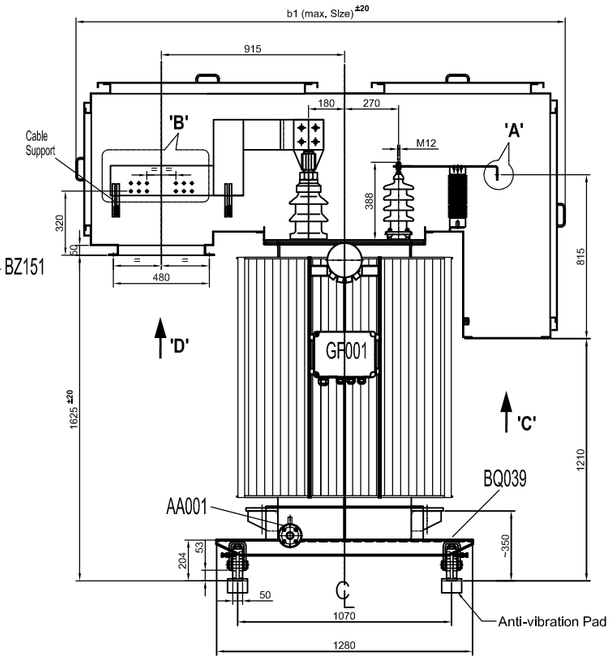

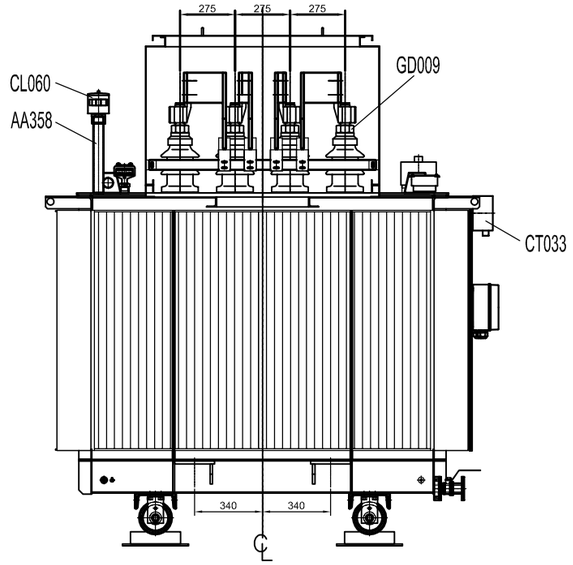

Oil Type : Envirotemp FR-3
Paint finish process : N 2125 0009 Schneider Electric "T Type"
Tank and cover are bolted
Transformer Location : Outdoor
Colour : RAL 7032
h3 : Height of crane hook with lifted core
H.T. : Active Part
℄ :Transformer Center Line

LV BUSHING CONNECTION BAR
DT 10/4500 A
(Scale : **NTS**)

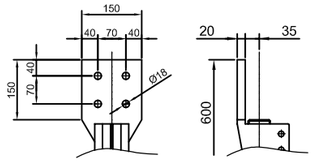

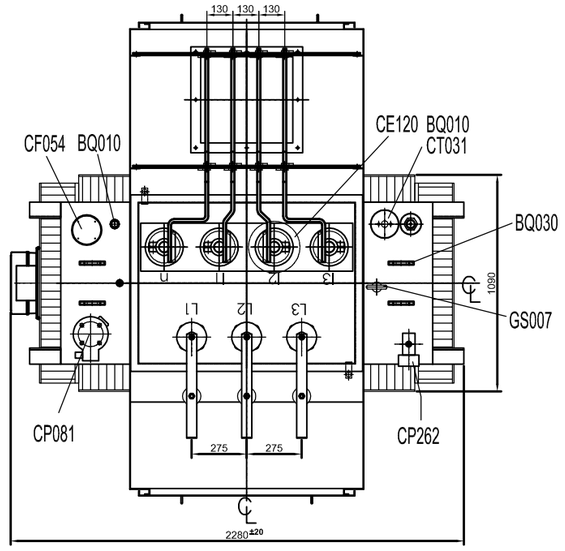

VIEW "D"
Busduct Detail
(Scale : 1/15)

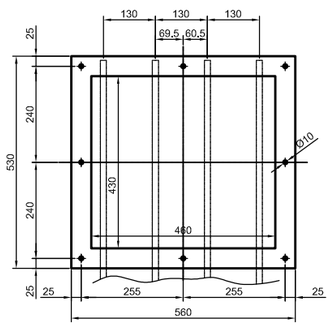

Foundation Plan
(Scale : **NTS**)

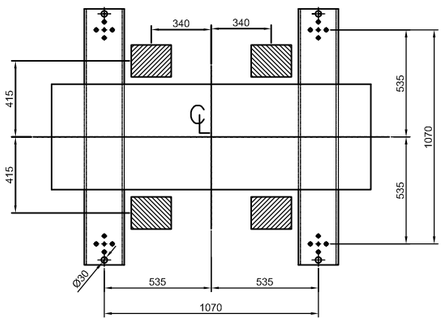

POS.	DESCRIPTION	PIECE	TYPE	DRAWING NO
AA001	RESIDUAL OIL DRAIN PLUG FOR MAINTANK	1	DN25	E2080766
AA358	OIL FILLING PIPE	1	1½	E2060653-04
AE001	BIDIRECTIONAL ROLLER (Ø160 mm)	1	LOCKABLE	E2060117
BB030	CABLE BOX	1	IP54	-
BQ010	THERMOMETER POCKET	2	R 1"	E2060640
BQ030	LIFTING LUG FOR ENTIRE UNIT	4	Ø50	-
BQ034	LASHING LUG	4	Ø35	-
BQ039	PULLING EYES	4	Ø30	-
BZ133	TERMINAL FOR TANK EARTHING	2	Diagonal Placed M12	E2060227-05
BZ151	RATING PLATE	1	SS-316 (Cr-Ni)	E2833388
CE120	CURRENT TRANSFORMER PHASE (In Tank)	1	3500 / 2A, CL3, 10 VA (THERMAL IMAGE)	
CL060	OIL LEVEL INDICATOR (MAINTANK)	1	QUALITROL 015	4208117
CT031	THERMOMETER FOR OIL TEMPERATURE	1	2C	E418634
CT033	THERMOMETER FOR WINDING TEMPERATURE	1	2C	E4201114
CP081	PRESSURE RELIEF DEVICE	1	ELKIM 50-T	E4205257
CP262	MANOMETER FOR MAINTANK	1	QUALITROL	E4208118
GD001	BUSHING FOR PRIMARY	3	EN 24/250 A (EN 50180)	E2040452
GD009	BUSHING FOR SECONDARY	4	DIN 10/3500 A	E2040412
GF001	CONNECTION BOX (KL6)	1	IP 54	-
GS007	OFF-CIRCUIT TAP CHANGER	1	KDM B 302373	ELMEK

Detail "A"
H.V. connection busbar detail

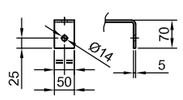

Detail "B"
L.V. connection busbar detail

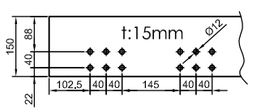

VIEW "C"
CABLE GLAND DETAIL
FOR PRIMARY SIDE
(Scale : NTS)

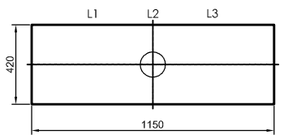

Cable Gland Plate Antimagnetic undrilled
Cable Glands are not with in Schneider Electric scope
Material : AISI 304 - 3mm

Type	Ins. Liquid	b_1	Weight as Tons Total	Oil	H.T.	h_3 (mm)
DFU 4434	Oil	2450	6.40	1.32 / 1435 liter	3.58	4480

Rated power:	2500	kVA
Trans. ratio :	22 / 0.433	kV
Vector Group : Dyn11	Frequency :	50 Hz.

No	Revision	Date	Name	App.
05	ADH-T/22833	11.01.13	KAMA	H.T.
04	ADH-T/04	20.12.12	KAMA	H.T.
03	ADH-T/03	17.12.12	KAMA	H.T.
02	ADH-T/02	11.12.12	KAMA	H.T.
01	*First Release*			

Dimensions without tolerance acc. to ISO2768	Approval: T.KUTAN
Date	16.11.2012
Department	ADH-T1
Designer	M.KAMA
Check	H.TÜRKER

Schneider Electric

Remarks
FB No. M223617

Class: R

Item group

Eng. group

Description
DIMENSIONAL DRAWING

Code No. -

Scale 1/30

AutoCAD

Drawing No.	Page No.	Pages
E2833387	1	1

Cancelled by drawing

Replaced by drawing