SWITCHGEAR FRONT VIEW
TYPE : GMA

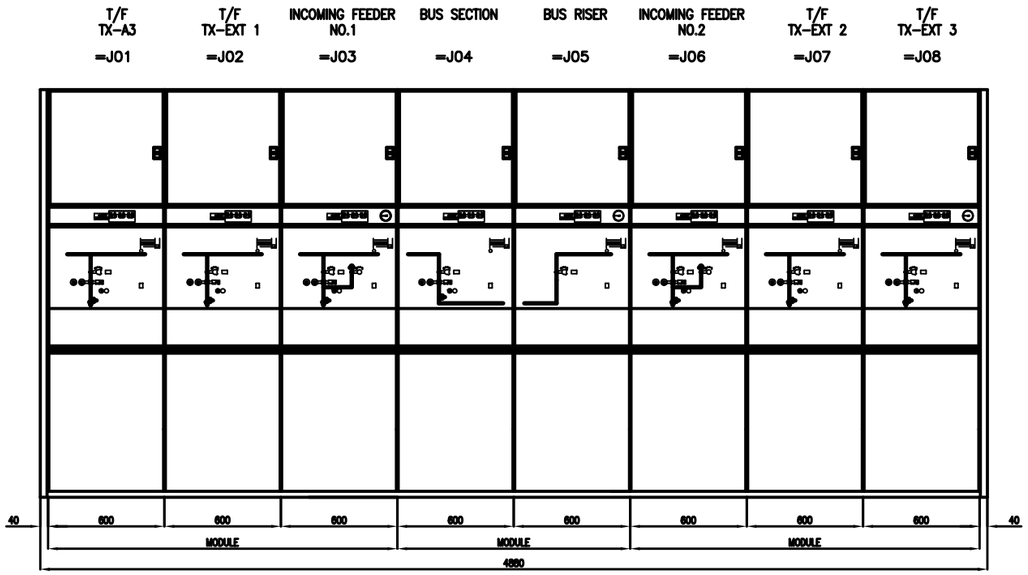

SWITCHGEAR SECTION A-A
VIEW

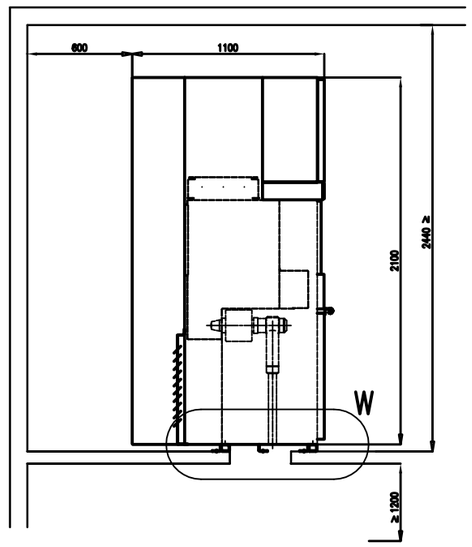

switchgear according to:
IEC 60298/DIN EN 60298 (VDE 0670 part 6)

rated short-time withstand current 25 kA/3 sec.

total weight of the switchgear approx. 3500 kg
weight of the greatest transportable assembly approx. 700 kg

for the erection of the panels only the conditions given in this drawing are to be considered. There is not a static calculation for the building.

comment:
conditions differing from these drawings require the consultation of AREVA Sachsenwerk GmbH!

area of the panel

floor opening for power cables must be accessible

alignment profiles out of steel □ 50x50x4

area of possible longitudinal supports

minimum measure

FLOOR FRAME DRAWING
FLOOR FRAME (QTY : 1x3-2SETS + 1x2-1SET)

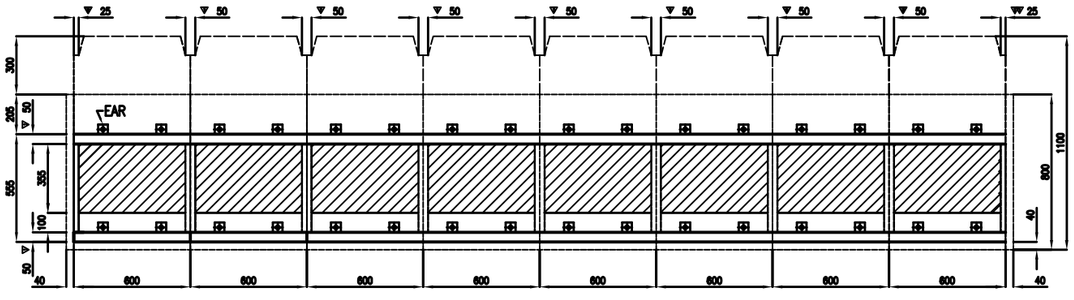

DETAIL W

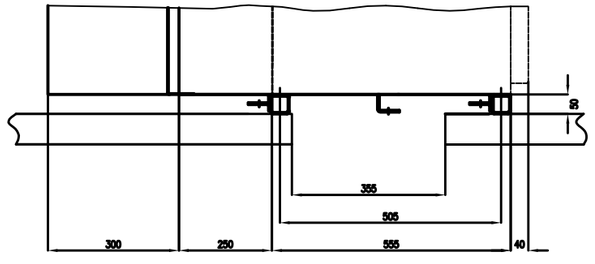

DETAIL OF EAR

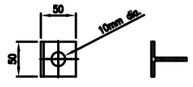

REV.	DESCRIPTION	DATE	BY
2	FOR APPROVAL	14.12.09	DEX
1	FOR APPROVAL	10.12.09	DEX

GLOBAL SWITCH LIMITED

22KV SWITCHGEAR SUPPLIER :
AREVA

PROJECT TITLE :
PROPOSED EXPANSION OF CARRIER HOTEL FACILITY AT 2 TAI SENG AVENUE, SINGAPORE FOR GLOBAL SWITCH LIMITED

DRAWING TITLE :
GENERAL ARRANGEMENT DRAWING FOR CONSUMER EXPANSION SWITCHBOARD HVSR - EXT

CONSULTANT REF NO. :

DRAWN: B. JIMER	SCALE: N.T.S.	CHECKED: TAN ENG-HIAT	APPROVED: TOH BOON-TAT
DESIGNED: B. JIMER	DATE: 02.12.2009		

DRAWING NO. 4544PM912-GAD-001
DIGITAL FILE NO.