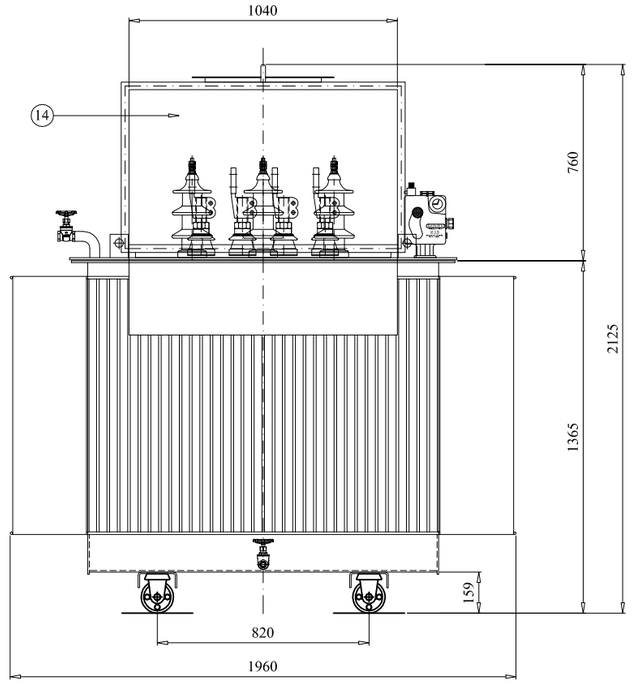

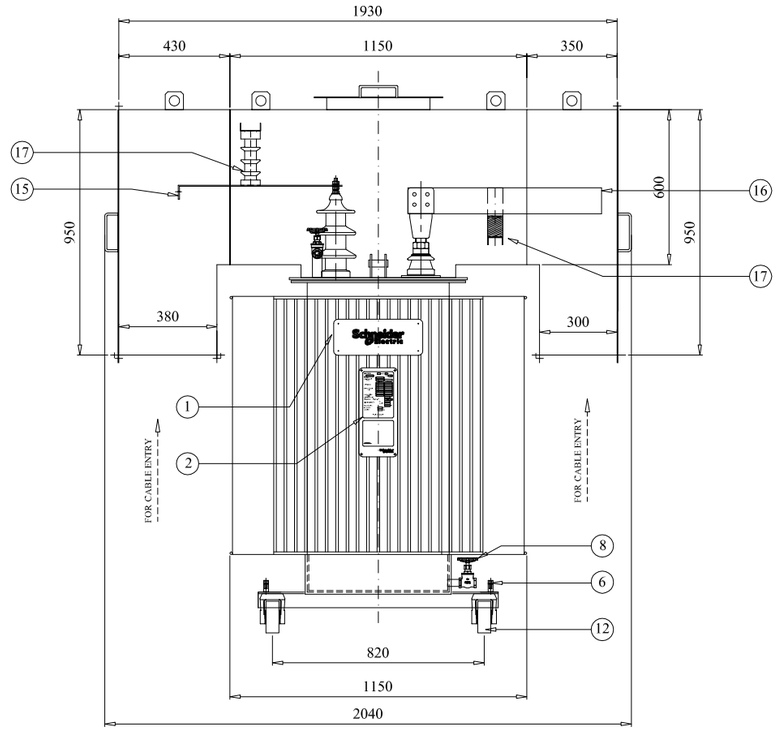

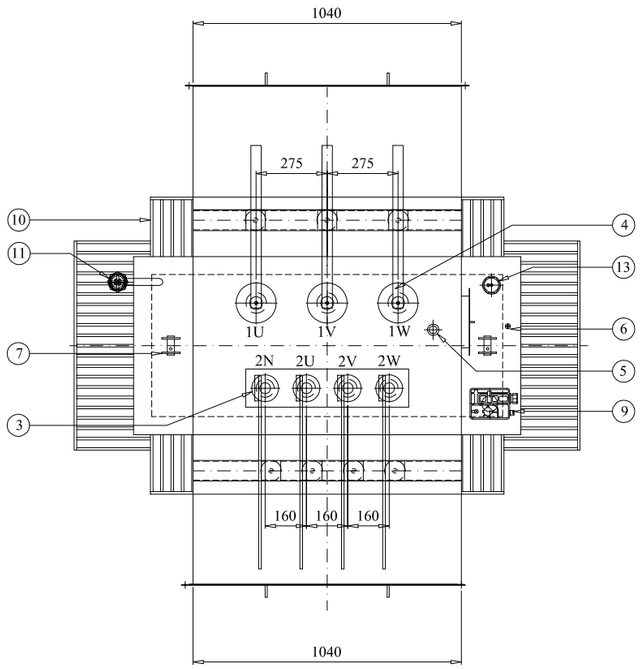

NOTES :

1. NAME PLATE
2. RATING PLATE
3. LV BUSHINGS
4. HV BUSHINGS
5. OFF CIRCUIT TAP CHANGER
6. EARTHING TERMINAL
7. LIFTING LUGS
8. DRAINING VALVE
9. PROTECTION RELAY RIS
10. FINS TYPE RADIATOR
11. FILLING VALVE
12. BI DIRECTIONAL ROLLER
13. PRESSURE RELIEF DEVICE WITHOUT CONTACT
14. HV & LV AIR TERMINAL CHAMBER
15. HV BUSBAR
16. LV BUSBAR
17. POST INSULATOR

ELECTRICAL CHARACTERISTICS

TYPE	:	OUT DOOR / ONAN
RATING	:	1000 kVA
PRIMARY VOLTAGE	:	22 kV ± 2.5, ± 5 %
SECONDARY VOLTAGE	:	0.433 kV
VECTOR GROUP	:	Dyn11
APPR WEIGHT	:	3240 KG.
OIL WEIGHT	:	860 KG.

DATE		REMARKS	SIGN

PROJECT	SAT AIR PROJECT SINGAPORE (D.59522.01)	SCALE	-
		DRAWN BY	Asep
TITLE	OUTLINE DRAWING TRANSFORMER 1000 kVA	CHECKED BY	Brw
		APPROVED BY	Zhd
		Distribution Transformer	

DATE: 7-May-2013

Schneider Electric

L.0546.GI05 A3