All rights of this document are reserved
It is forbidden to copy, distribute, pass over without permission.

:Center Line

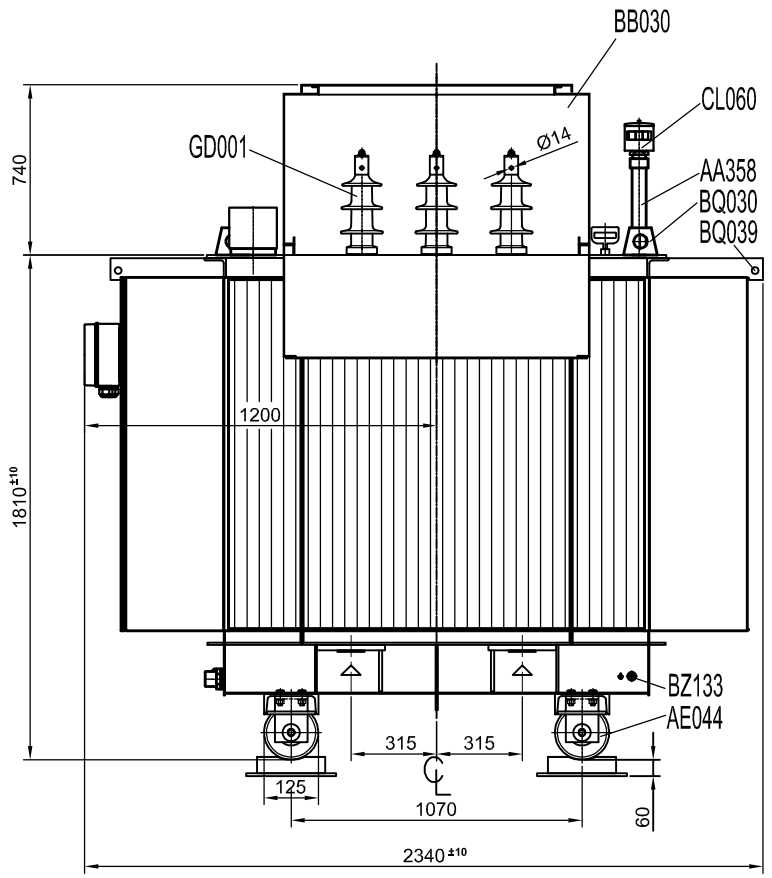

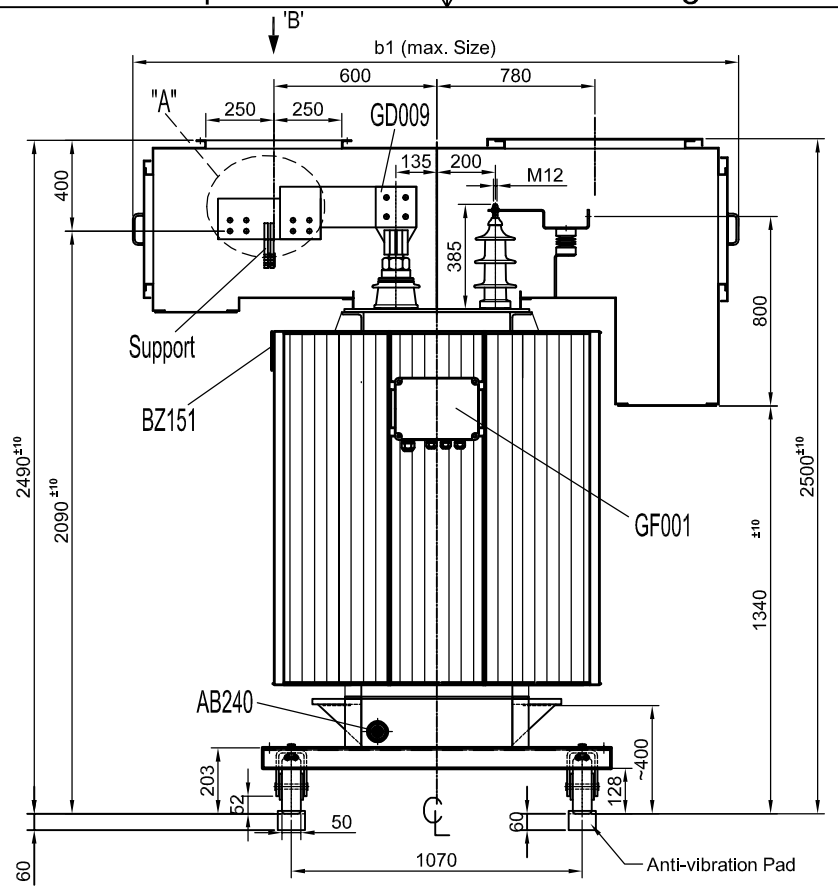

POS.	DESCRIPTION	PIECE	TYPE	DRAWING NO
AA358	OIL FILLING PIPE	1	1½	E2060013-03
AB240	RESIDUAL OIL DRAIN PLUG FOR MAINTANK	1	A31	-
AE001	BIDIRECTIONAL ROLLER (Ø125 mm) & SKID	4	LOCKABLE	E2060117
BB030	CABLE BOX	1	IP54	-
BQ010	THERMOMETER POCKET	2	R 1"	E0292515
BQ030	LIFTING LUG FOR ENTIRE UNIT	4	Ø50	-
BQ039	PULLING EYES	4	Ø35	-
BZ133	TERMINAL FOR TANK EARTHING	2	Diagonal Placed M12	E2060227-05
BZ151	RATING PLATE	1	-	E2826477
CL060	OIL LEVEL INDICATOR (MAINTANK)	1	QUALITROL 015	-
CT031	THERMOMETER FOR OIL TEMPERATURE	1	2K	E2080002
CP081	PRESSURE RELIEF DEVICE	1	COMEM 50-T	E4201535
GD001	BUSHING FOR PRIMARY	3	20-NF-250/A (DIN 42531)	E2040144
GD009	BUSHING FOR SECONDARY	4	DT3/4500 A	E2040060
GF001	CONNECTION BOX	1	IP 54	-
GS007	OFF-CIRCUIT TAP CHANGER	1	KDM B 302373	-

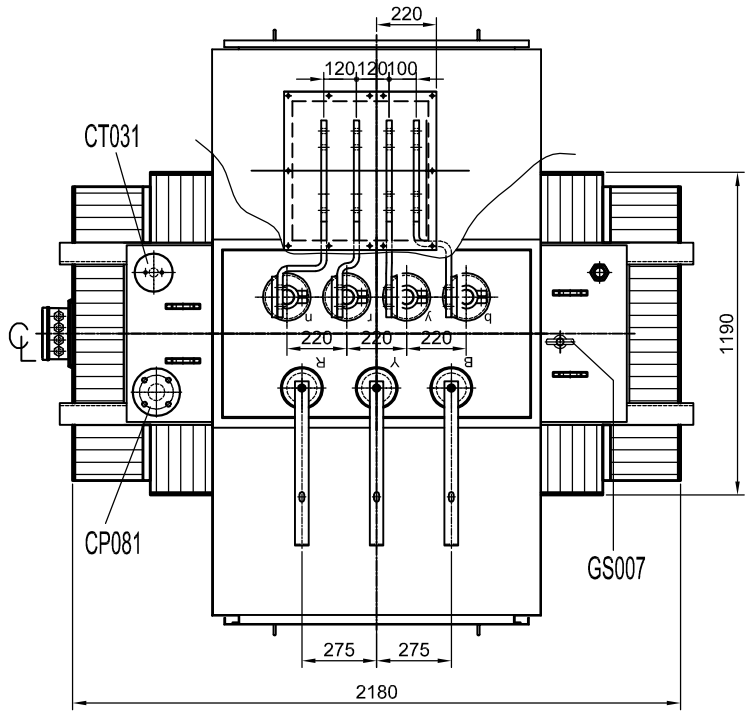

Foundation Plan

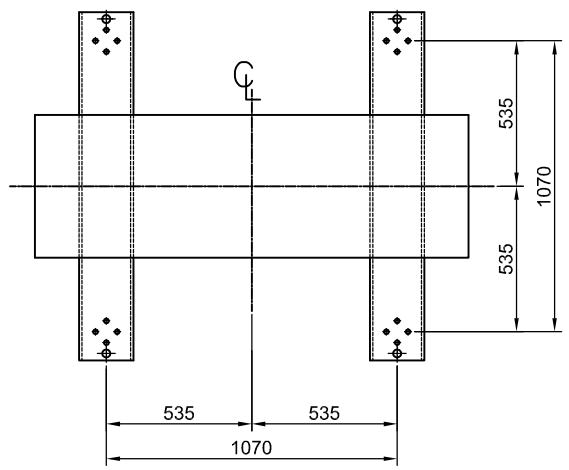

Busduct Detail
View "B"

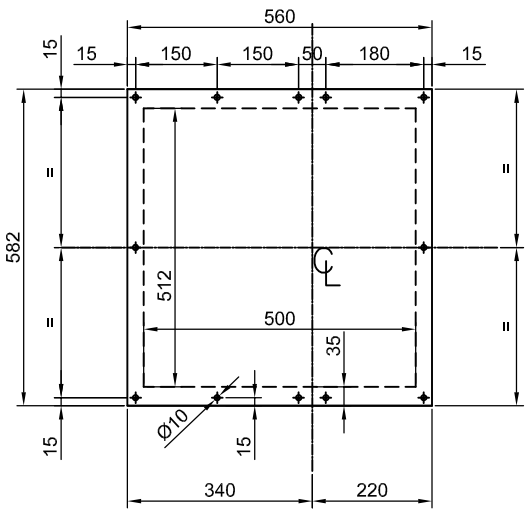

DT3/4500 A
LV BUSHING CONNECTION BAR

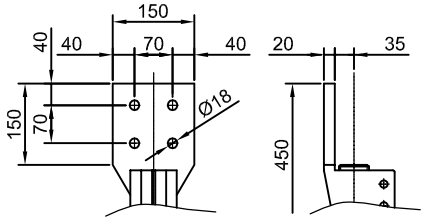

Oil Type : Silicone
Paint finish process : N 2125 0009 AREVA T Type
Each wheel 90° convertible
Tank and cover are welded
Transformer Location : Outdoor
Colour : RAL 7032
h3 : Height of crane hook with lifted core 4750mm
H.T. : Active Part

L.V. connection busbar detail
Detail "A"

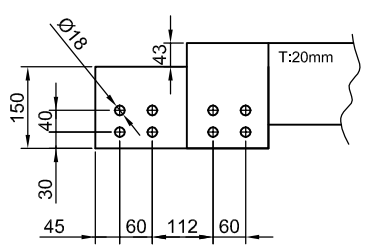

H.V. connection busbar detail

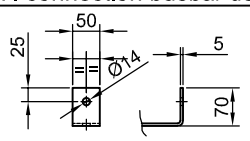

CABLE GLAND DETAIL
FOR PRIMARY SIDE

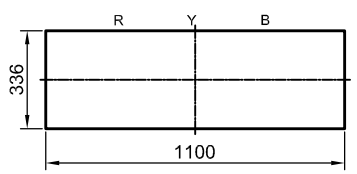

Cable Gland Plate Antimagnetic undrilled
Cable Glands are not with in Schneider Electric scope
(3Cx300 mm²)
Material : AISI 304 - 3mm

Type	Ins. Liquid	b_1	Weight as Tons Total	Oil	H.T.	h_3 (mm)
DHU 4434	Oil	2120	5.70	1.18	3.05	4670

						Dimensions without tolerance acc. to ISO2768	Approval	Remarks	Class
									R
								FB No. M221457	
						Date	20.09.2010	Description	
05	ADH-T/18351	03.11.11	E.BAY	H.T.		Department	ADH-T1	DIMENSIONAL DRAWING	
04	ADH-T/04	08.06.11	KAMA	H.T.		Designer	M.KAMA		
03	ADH-T/03	06.06.11	KAMA	H.T.		Check	H.TÜRKER		
02	ADH-T/02	18.05.11	KAMA	H.T.		Schneider Electric		Drawing No. E2826525	Page No. 1 / Pages 1
01	First Release							Cancelled by drawing	Replaced by drawing
No	Revision	Date	Name	App.					

Rated power:	2500	kVA
Trans. ratio :	22 / 0.433	kV
Vector Group : Dyn11	Frequency :	50 Hz.

Item group	Eng. group	Code No.	Scale	AutoCAD
		-	NTS	