# A series of articles to understand the Automatic Transfer Switch Equipment

## TSE are critical parts of an electrical installation

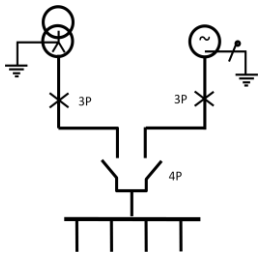


Automatic Transfer Switch Equipment (ATSE) aims at providing a dependable power transfer between the Main Source and the emergency source to Essential or Critical loads.
When the Main source fails, the transfer switch detects the event with certainty, starts the standby generator and transfers the load to the emergency generator when it is ready. When the Main source comes back, again, the ATSE detects the event and transfers back to the Mains, sometimes under conditional criteria, provides a cool down period to the Diesel Generator (DG) if any, then stops it.

The contribution of the ATSE to the Reliability of the installation is as important than the Transformer, DG or protection ones. The choice of the architecture of an ATSE and the selection of its components is as a consequence, a major responsibility of the designer.

This criticality and the complexity of some issues related to ATSE, the weight of old habits in the design, led us to propose a series of papers dedicated to the Transfer Switch Equipment with the aim to optimize nowadays diagrams with modern solutions.

We'll study first the functions to end up with a cost comparison and architecture design considerations.

The series handles the following topics:

1. Consistent STANDARDS for Installation and Products ..... 2
2. ATSE features ..... 4
2.1. $I_n$ ..... 4
2.2. $I_{cw}$ ..... 5
2.3. $I_{peak}$ ..... 6
2.4. AC category ..... 6
2.5. 0 position ..... 7
2.6. Disconnection ..... 7
2.7. Manual on load breaking ..... 8
2.8. Reliability ..... 8
2.9. Transfer time ..... 9
2.10. Neutral switching or 4 poles simultaneity. ..... 10
3. Neutral referencing ..... 12
4. Reliability issues ..... 16
5. Interaction of Protection and Transfer ..... 17
6. ATSE type, open or close transition or BBM vs MBB ..... 18
7. By Pass ATSE for critical applications ..... 20
8. Cost issues, analysis of 7 versions of a 1250 A ATSE panel ..... 21
9. Architectures ATSE based in high reliability installations. ..... 25

## 1. Consistent STANDARDS for Installation and Products.

We'll discuss here installations under the IEC or NEC installation standards, which integrate "native IEC products"[1] or "native UL products".

There are 2 major standards in the world which govern electrical installations: IEC and UL / NEC.

In the **"IEC world"** there is the IEC 60 947-X series for products (-1 generalities, -2 for circuit breaker (CB) -3 for Load Break Switch (LBS) and Fuse Disconnector Switches, -4 for contactors, -5 for control devices and -6 for Transfer Switch Equipments) and the IEC 60 364-X series for installation.

IEC 60 947-6-2 uses the following terminology:

- MTSE refers to Manual Transfer Switch Equipment
- RTSE refers to Remote Transfer Switch Equipment (motorized)
- ATSE refers to Automatic Transfer Switch Equipment

For IEC, a ATSE can be based on 3 technologies:

- CC type, Contactor based
- CB type, CB based
- PC type, switch or double throw based

CC type is progressively abandoned, still used on low end installations on very low ratings (less than 100 A) with low reliability requirements (ex: residential).
The main issues which lead to their disgrace are:

- the lack of safety (no mechanical interlocking).
- the lack of reliability, leading to a poor continuity of service : Coil burning, contacts shattering .
- Availability of 4 poles type, spare parts.
- Heating, consumption, leading to impossibility of DC control even on low ratings.

CB type resists strongly in Asia, Middle East, Africa and has still supporters in Europe. PC type is the growing trend for all demanding applications (ex: most of the Data centers are with PC type).

In the **"UL world"**, there are 2 standards for TSE (UL 98 and UL 1008), and one for installation: NEC 250

The UL 1008 has been issued before the IEC 60947-6. The IEC 60947-6 has been by the way largely inspired by the UL 1008, but in 2005, the IEC committee rationalized all TSE standards into the IEC 60947-6 (M, R & ATSE). UL standards are so far not so clear on the structure.

As an anecdote this influence can be found in the term "PC" of the IEC 60947-6: it means "Power Contactor", acronym used for the double throw technology, historically and still the most employed one in the US.

Therefore, this link led actually to a pretty good similarity between both products standards.

| Product | UL | IEC |
|---|---|---|
| Switches, disconnectors, switch-disconnectors, fuse combination switch | 98 | 60947-3 |
| Double throw switches for standby systems | 98 | |
| MTSE, RTSE, ATSE | 1008 | 60947-6-1 |

**Figure 1 - UL & IEC products standards**

[1] « native IEC/UL product » : product designed originally for a IEC/UL market.

It is on the installation side that the situation is very different: the root of those differences lies in the earthing systems and specifically the neutral handling. Those differences will be detailed in further parts. Associated to the habit of the US contracts and regulations to often specify implementations and not only objectives, these differences led to major differences in the product design to cope with the installation rules & habits:

- ⇨ no integration of the disconnect function in the ATSE,
- ⇨ neutral switching

Generally, designers use native IEC products in IEC type installations. Nevertheless, it happens that some native UL products are used in such installations. Despite they comply with the main IEC standard for ATSE (IEC 60947-6), there are 3 main drawbacks:

1. The first one is the **lack of integration of the Disconnection and TSE** functions: in the US, installations must have separated disconnects upstream of the ATSE (NEC § 250). This leads UL native products not to include the disconnection facility in their own products (which would add cost for no advantage). Hence, in IEC installation, where integration is allowed and brings advantages of footprint, reliability, cost and operation, UL native products have a disadvantage. One has any way to add disconnects upstream or operation people must disconnect 2 gears, generally in 2 different panels.

2. The second one is linked to the **Neutral switching** which leads to use specific solution (i.e. neutral overlapping) for overcoming an improper neutral switching with UL native gears (non simultaneity with phases switching). The root cause is the basic 3 phase design of all UL products, with the Neutral pole as an add-on for IEC secondary markets (for US manufacturers) and then added **uncontrolled delay** due to the additional mechanical play. Solutions like neutral overlapping created to overcome this basic design flaw, may create issues in the ground fault protection (higher settings, false tripping) which can't happen with native IEC products, and add unreliability to the system.

3. The third one is the **lack of manual on load switching capability** in UL native ATSE. It's a combination of the technology habit (double throw, which doesn't have this capability) and NEC rule (separate Disconnects upstream) which explains this situation.

As a conclusion, a designer should prefer the consistency of installation and products standards if he wants to optimize his installation and reduce its costs.

- In a UL installation, IEC native ATSE will be oversized in features and their integrated disconnection and manual breaking capability will be useless.
- In a IEC installation, reversely, UL native ATSE, by their lack of integration, will lead to add gears to the detriment of cost, footprint and operation easiness.

## 2. ATSE features

Among all the ATSE characteristics we'll focus on a few ones for the sake of the selection:

- In (& overload capability)
- Icw (and coordination with CB)
- AC category (Vs SLD and loads)
- 0 position
- Disconnection
- Manual on load breaking
- Reliability
- Transfer time (Transfer of motor loads b/w 2 live sources)
- Neutral switching

The other features need less attention, as their consequences in safety, reliability and cost are not significant.

### 2.1. $I_n$

The nominal current is a well known feature. The ATS can bear permanently this value with respect of all other specified characteristics.

What's about the overload capacity (a current higher than $I_n$ )? Obviously ATSE like all gears and electrical devices can accept an overload ($I_{O/L}$ ) for a short time (i.e. pulsed currents).
Up to which value of current and time?

Generally, it is the one allowed by the upstream protection. Typically $I_{O/L}$ > 115% In, 30S<t<1 h.
It can be computed by the formula given in Figure 2, based on the thermal equivalent currents.
Beware that this computation has limits and must always be confirmed by the manufacturer.

Unfortunately, no standard specifies this feature and it depends on each manufacturer to define the overload the gear can accept.

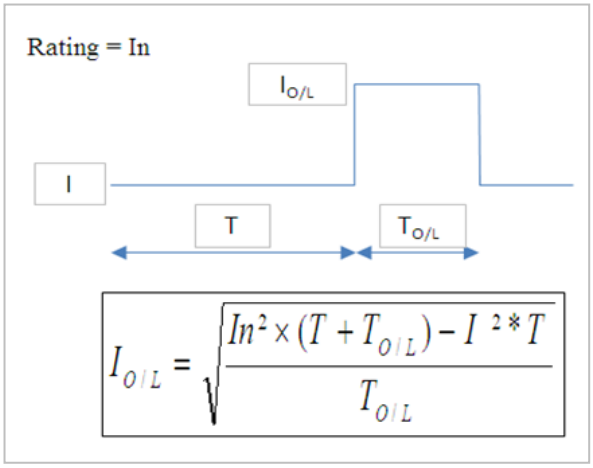


Figure 2 - example of pulsed current higher than In

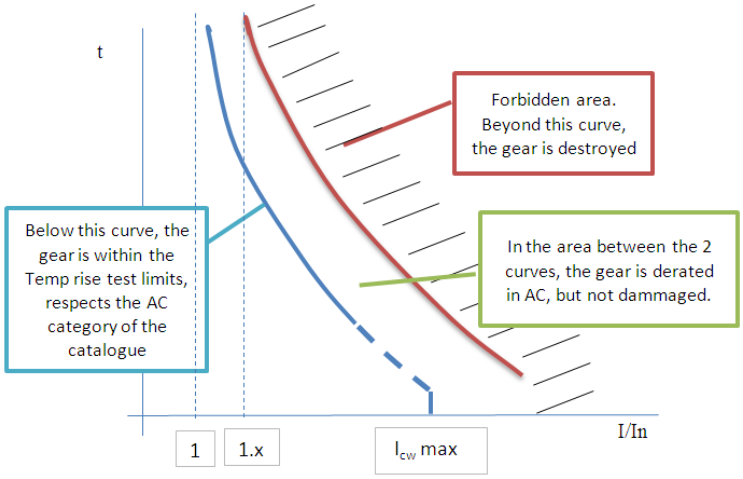


Figure 3 - relation between overload and Icw

This feature which can be named as the "long time I²t" capability and has not to be mixed up with the $I_{cw}$, "short time I²t" capability.

The Figure 3 shows the relation between both. In short, $I_{cw}$ is the limit of the "long time I²t" capability.

## 2.2. $I_{cw}$

The second main feature, it's the gear capacity to accept high short circuits values until the upstream protection clears the fault. It's a main difference between a CB and a ATS:

- CB are designed to limit the fault current and trip,
- ATS are designed to hold the short circuit current, no current limitation.

Rule of thumb: ATSE are designed with a **$I_{cw}$ higher than the let through energy** passed by a standard CB upstream (i.e. N type).

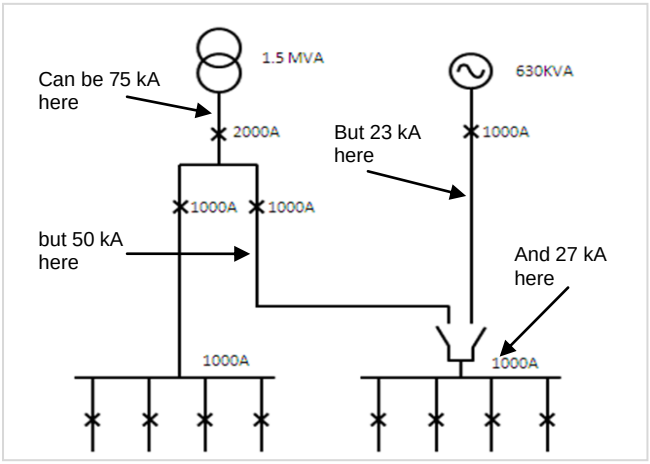


Figure 4 - example of various Icc in a SLD

The Figure 3 shows that the Icc along the single line diagram can vary a lot. Using only the transformer or main CB value of short circuit current downstream is a massive over sizing and over cost.

Nevertheless, a lot of SLD today are still oversized with non optimized values of short circuit current.

In special cases (Tfo with low Z – i.e. 3%, very short links), the designer may have to verify that the ATSE $I_{cw}$ is less than the Let Through energy of the upstream protection. It generally avoids to massively oversize the gears.
The computation is simple and worth doing it: the same value is used to size the bus bar below as the ATS doesn't limit the current.

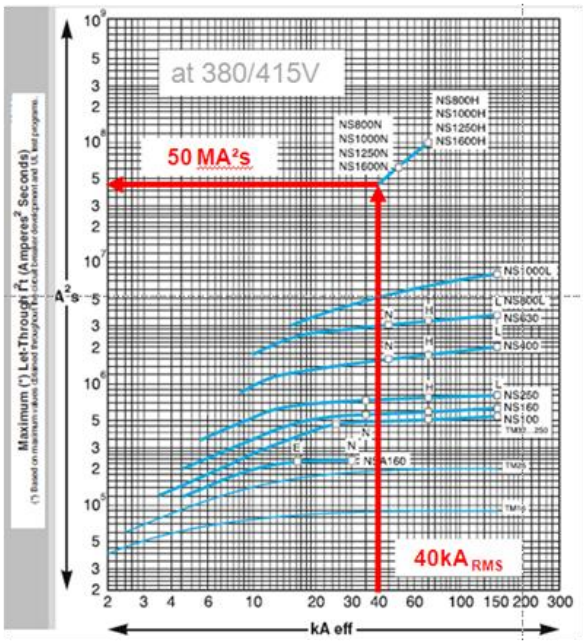


Figure 5 - Computing the Let Through Energy

From the CB limitation curve at the given voltage, we extract the maximum Let Through Energy for a given prospective short circuit current.

⇨ Here we have a s/c of 40 kA RMS which gives for the said CB, **50 MA²S**.

From the ATS catalogue, we extract the $I_{cw}$ for a given duration, then we compute the equivalent I²t:
$I_{cw@0.3S}$ = 64 $kA_{RMS}$.
⇨ $(I_{cw@0.3S})^2$*0.3S= **1229 MA²S.**

This value is higher than the CB Let Through Energy. The ATS works within its characteristics for energy.

### 2.3. $I_{peak}$

This feature shows the limit of the gear to undergo high peak current during the short circuit. Even though the contact system is design to hold and not to trip, there is a limit in $I_{peak.}$
This value has to be checked as well, only when one expects a higher than usual Peak Let Through current on a short circuit (ex: a very high withstanding CB upstream).
The determination is even easier than for the $I_{cw}$ : compare the ATS $I_{peak}$ value with the maximum Peak Let Through current of the CB from its limitation curve in $I_{peak}$.

### 2.4. AC category

The AC category as specified by the IEC 60947-6-1 is based on the "load" characteristics and as such, largely influenced by the power factor (PF). Below 0.38, AC 33 is required (case of a ATS directly on a inductive load). Above 0.8, AC 31 is enough (case of bus bars in a main distribution board).
A / B stands for Frequent / infrequent operations.

Reference in IEC 60947-6-1:

- Table 2 & 3 for AC31 to 33 making & breaking and operational performances
- Table 8, 9 & 10 for the differences between A & B categories.

The main difference between categories are:

- Number of making and breaking (Table 8) in the circumstances of the category (Table 2)
- Number of operation with/without current, the overall number being constant, except for high ratings (> 1600A) (Table 9 for A & 10 for B) in the circumstances of the category (Table 3).

A designer should avoid over specification by specifying the proper category. This is the current practice in motor control, it should be the same in ATSE.
A thumb rule is therefore: on main distribution board, AC31, on unique inductive loads, AC33.

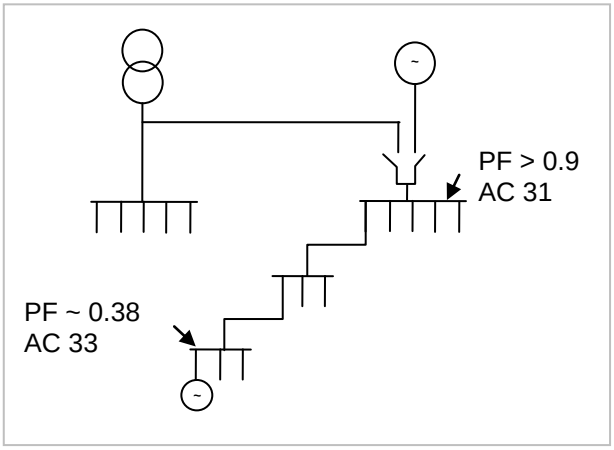


**Figure 6 - AC categories according to the need.**

## 2.5. 0 position

It is the stable position where both circuits are open. This feature is not available in double throw systems as it needs 2 independent interlocked switches to be implemented.

It's a decisive feature for Open Transition ATS for 3 main reasons:

1. For the process, it allows to have a safe position in case of fault (ex: DG restart off load)
2. For the process, it allows a reliable non powered position when returning from DG to Tfo to avoid a motor destruction (reverse voltage on motors) in case of too fast transfer (less than 1 s). Even a synchronization of sources doesn't remove this issue as the motor voltage decaying is unpredictable, even over a few tens of mS (see chapter 2.9 Transfer time).
3. For the maintenance people, it allows the Disconnection required by the IEC 60364 for maintenance operation in the panel. Padlocking can be done only in this position.

One has to understand that the zero position has to be a stable one, mechanically held. In the case of a switch or CB based ATSE, it's the position where both switches or CB are open. Otherwise, the Disconnection feature is not possible. As said above, the third available technology, double throw ATS with "delayed transition", doesn't provide a stable, mechanically held 0 position. The Delayed transition procures a delay in the transfer time by mechanically slowing down the movement. It's not a stable position and can't be used for Disconnection purpose.

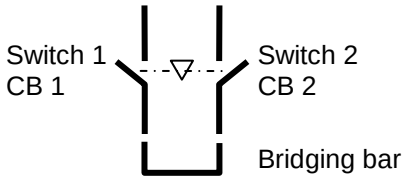


**Figure 7 - example of a switch or P C based TSE with Disconnection**

## 2.6. Disconnection

Having a stable 0 position allows to implement the Disconnection function.
This feature is sanctioned by **IEC 60947-3.**
It's interesting to have in the same gear both functions: TSE and Disconnection.
It allows to position the TSE as the main incomer of the switchboard to satisfy the IEC 60364 for the safety of maintenance in the switchboard.

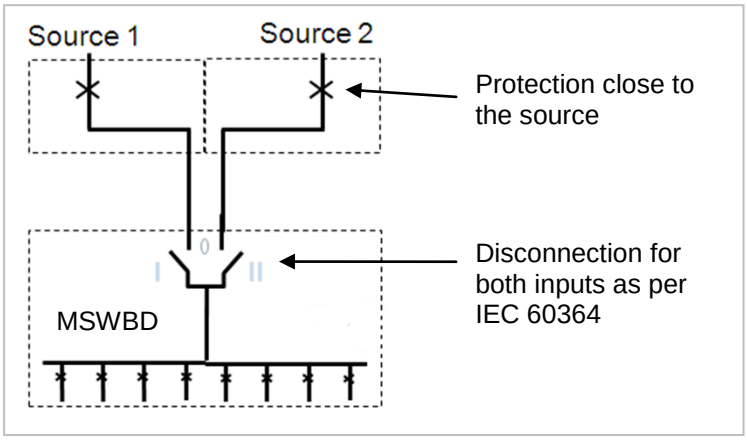


**Figure 8 - ATSE should also be a Disconnector**

Both CB and Switch based TSE provide the Disconnection feature along with the TSE one. Double throw can't have it.
The only difference between CB and switch based TSE is on the manual operation: simpler and error free with switch based, as only one handle and one padlock are necessary for padlocking the single disconnecting gear.

## 2.7. Manual on load breaking

If the TSE is also of Disconnect type, it should be as well **able to switch off the full load in manual operation**. Failing to do so would oblige the designer to add a Load Break Switch function (also sanctioned by IEC 60947-3) upstream in the circuit with collateral effects:
- removing the advantage of having the Disconnection feature along with the TSE ones (footprint, easiness of operation, cost)
- or obliging the operator to switch off both sources before disconnecting. They might be in another switch room …

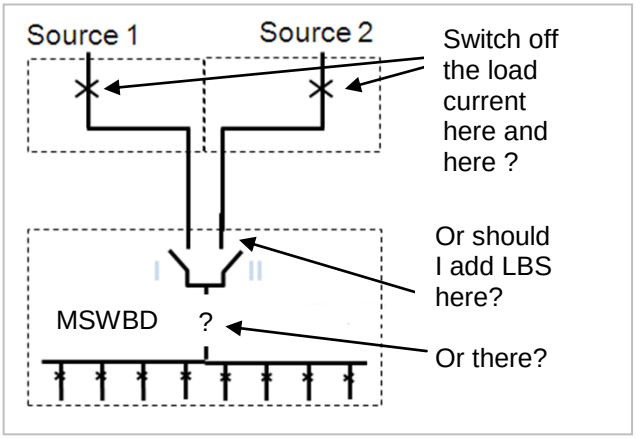


**Figure 9 - Drawback if the ATSE cannot switch the load in manual operation.**

In case of emergency operation, a maintenance person should have the simplest procedure to execute ("idiot proof"). Thus a simple handle (switch based) or 2 CB OFF (CB based) is enough to put the circuit in any position, I, 0 or II, without caring about the current in the TSE.

## 2.8. Reliability

Reliability is becoming more and more a concern for End users under the pressure of globalization: the emergence of low cost gears available everywhere. When the features are equivalent on the catalogues, the main differentiator is the reliability of the gear. How to make it real yet simple?

All manufacturers claim that their gears are of the highest quality. Fine, just prove it!
Nowadays, serious manufacturers are supposed to have a quality backlog large enough to prove their claim. Responsible designer can then simply state in the specification that "the manufacturer shall provide on request MTBF values for the TSE computed from the field returns".

It encompasses multiple issues of interest for the end user: guarantee of having a large installed base, organization and professionalism to handle the returns from the field and ultimately, the MTBF!

This solution, global, facts based, easy to implement in a tender, would terminate the endless debate about the relative reliability of the non integrated Vs integrated (ex: CB type Vs PC type) or "cheap Vs expansive" solutions. You can choose your solution and compute the business cost of a low MTBF:

- if the end user is careless about reliability, go for the cheapest
- Otherwise choose a solution with its associated costs on the basis of the benefits the end user will get in terms of business.

See chapter 4 and 5 for additional values and analysis.

## 2.9. Transfer time

Does speed matters in TSE?

- ⇨ Speed matters for opening and closing of the contacts to ensure an efficient switching in Auto or Manual mode, under load condition, without Neutral issues.
- ⇨ When it comes to the transfer time, the answer depends on the loads behavior.

First of all, on Mains failure, the Transfer Time is not an issue. The transfer will require a waiting time (Mains failure) plus some other delays which make a fast transfer irrelevant. If it really is an issue, then the designer will have to implement a UPS system, which guarantees a no break supply in any case.

Second, if both sources are not synchronized, the speed doesn't matter as well: the only solution is to wait for a sufficient decay of the Reverse Electromagnetic Field in the motor before transferring on the second source (see below).

Then, the issue may come up only in the transfer between 2 live synchronized sources: either between 2 transformers or between a DG and the Mains on return.

The inductive loads are the most problematic ones. As it's very difficult to avoid any "motor without drive" in an installation, this issue is present in all SLDs (a drive will tackle the Back EMF issue).
For those loads, the transfer time should never be too short: The main issue is the decaying of the Reverse Electromagnetic Field (or Back EMF) in the motor leaving an active Ph+N system, decaying in phase and amplitude. It's such a complex phenomenon, depending on so many criteria, that it cannot be predicted over a few mS. Hence any transfer time higher than approx a few mS is likely to reconnect a motor on the second source with the source and motor voltage systems out of sync. The window of "correct synchronization" to avoid any damage on motor is pretty narrow:

- Voltage +/- 5%
- Frequency +/- 0.2 Hz
- phase angle difference +/- 5º

The consequences are a too high inrush current (up to 12 times the nominal current) which can damage the motor and/or trip the upstream protection.

You have several possibilities to tackle this issue:

1. Waiting time at the Zero position. The simplest and safest one. It requires to have a TSE with a stable Zero position.
2. Delayed Transition for TSE without stable Zero position (Typ. double throw). It satisfies functionally the need, but to the cost of an additional delaying mechanism in the heart of the TSE, which impacts the reliability.
3. Monitoring of the sources synchronization doesn't solve the issue at all as the problem comes from the motor decaying speed. We should need to monitor the synchronization of the Back EMF and the destination source! Not feasible, reasonably.
4. Close Transition plus Sources Synchronization is a possible but expansive and far less reliable solution. It will be analyzed later on in chapter 6 on Make Before Break type ATSE.

## 2.10. Neutral switching or 4 poles simultaneity.

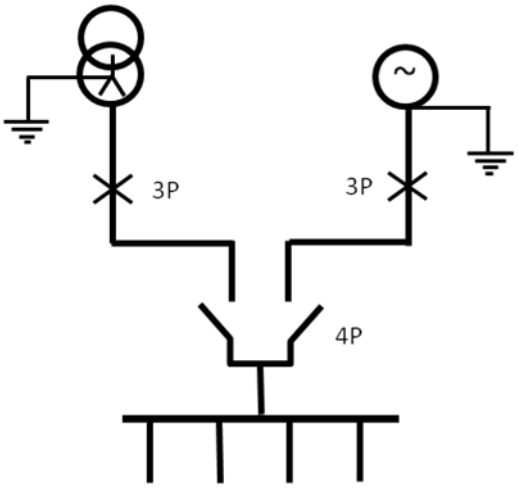


Figure 10 - TSE is the only 4P gear in TNS systems

The question here is “how to ensure a proper Neutral switching in a dual sources system?”

In the most common earthing systems (TNS or TNCS), the general case in IEC installation is to have both sources Neutral grounded at the source level. The reason is mainly a safety one.
The TSE is therefore the only one gear which needs to be 4 poles. Hence Neutral switching relies only on TSE.
All other protections in a TNS system need only to be 3 poles (provided there is no heavy 3rd harmonics or double or ½ Neutral systems which lead to a 4 poles protection).

We may have some specific instances of the TN systems which don’t require 4 poles switching (i.e. Australia). They are not considered here, as not a “pure earthing system”.

The quality of the Neutral switching Vs Phases switching is essential to avoid any “Floating Neutral” dangerous for the loads in unbalanced networks.

Floating Neutral is the situation when the phases are present and the neutral absent.
In that case, the voltage Ph/N is not anymore fixed by the transformer, and in case of unbalanced loads, can go beyond the maximum value, leading to the destruction of the load.

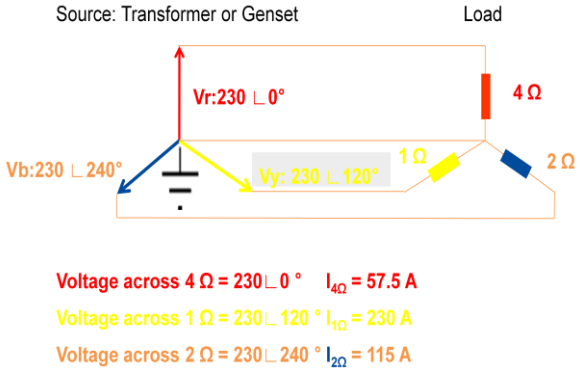


Figure 11 - Phase system with neutral connected

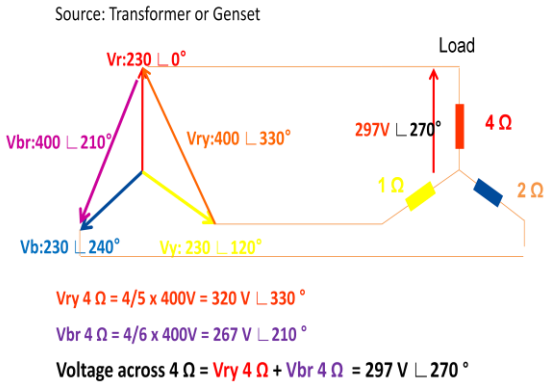


Figure 12 - Phase system with Neutral absent

This situation can occur when the neutral conductor is broken (Broken Neutral), but also during a transfer, if the Neutral pole is not switched ON or OFF simultaneously with the phases. In that case, the Neutral switch OFF can occur earlier than the phases switch OFF, leading to a floating neutral situation.

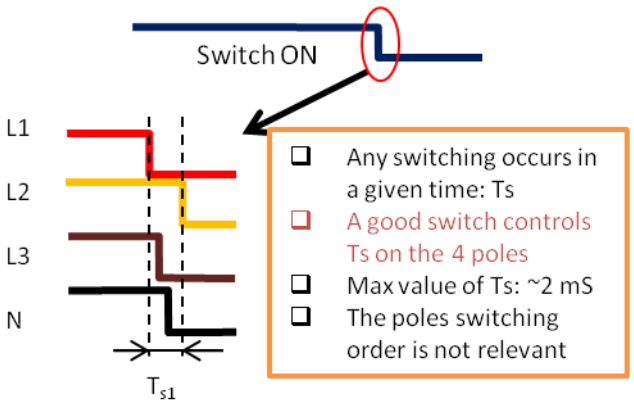


Figure 13 - Proper switching

We emphasize here that the dangerous situation is the one with phases present and Neutral absent. The absence of Phase AND Neutral together is not dangerous. It's the normal status when the load is disconnected! So far, not dangerous for any load.

Of course there is a time limit to the floating neutral: we understand that a Neutral absent a few nano seconds will not harm, owing to the complex impedance of the loads which smoothes the rise of the Ph/N voltage. But one minute is leading for sure to an irreversible damage. Where is the limit?

**The safe limit is below 2 mS.**
This value is the de facto standard imposed by all the native 4 poles switch gears (contactor, CB, TSE, LOAD BREAK SWITCH, or FDS) developed for almost a century.
This limit is easily accepted by all electronic power devices (i.e. drives, UPS, VFD) developed for tens of years.
As a proof, did anybody hear about any Floating Neutral issue in a CB type ATSE (build around "native IEC" 4 poles CB or "True type" TSE for the NEC) properly installed? The answer is no! The reason being that all those gears switch simultaneously their 4 poles.

**The dangerous limit is 5 mS.**
Above 5 mS of floating neutral, most of the electronic power devices may develop excessive voltages.
Some devices shut down automatically when the Neutral disappears more than a few mS (ex: Socomec UPS shut down at 8 mS).

**The proper solution to avoid any floating Neutral issue is to have a good *simultaneity* of the 4 poles switching. A good value is 1 mS**, accepted by all native 4 poles switchgears.
This must apply in any switching condition (Manual or Automatic mode), when switching ON to OFF or OFF to ON. It's an intrinsic characteristic of a good switching system.

We pinpoint that this characteristic is not correlated to the transfer speed.
One can have a TSE with a low transfer speed (1 s) and a simultaneous 4 poles switching (1mS) or a TSE with a high transfer speed (40 mS) and a non simultaneous 4 poles switching (5mS).

In UL / NEC based systems the Neutral grounding is different, leading "UL native TSE" to be mostly 3 poles TSE. Very few manufacturers re design a new mechanism for a secondary market (i.e. IEC one). Most of them, don't. When using "native UL" gears in IEC like systems, they need to add a 4$^{th}$ pole for the Neutral. This add-on is necessarily linked to the main mechanism by some gears (where in native 4 poles, the link is solid). Those gears necessarily bring some delay in the movement, difficult to control. The manufacturer will face 2 issues:

- Reliability of the gear by the linking mechanism
- Non simultaneity between the phases and Neutral switching (<2 mS).

Failing to do so will lead to add complex systems of overlapping to "erase" the effects of the uncontrolled neutral switching within the 2 mS limit. Unreliability remains unsolved, with potential issues of permanent Neutral connection or permanent floating Neutral …

## 3. Neutral referencing

This is even a more blurred issue than the Neutral switching. The question here is “should the Phase + neutral system of a load be always referenced to ground?”

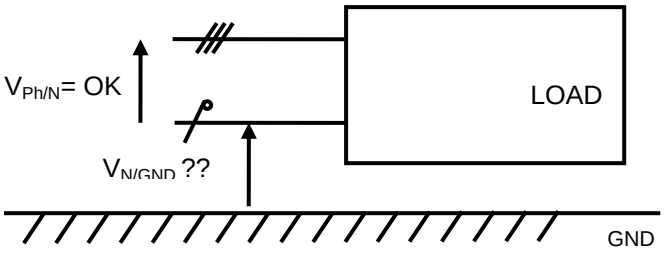


Figure 14 - Neutral referencing

This issue refers to the interruption of the 4 poles (3 phases + neutral) used commonly in switch based “IEC native” ATSE upstream of loads which need the neutral.

Let’s consider first a IT earthing system often used in Data Centers. Obviously the question makes no sense: the neutral is NOT grounded! In that case the answer to the above question is NO. The Phase + Neutral system is not referenced to ground and everything is fine.

Let’s see now a non IT system, TT, TNS and TNCS systems (TNC being ignored as no more used in serious installations).

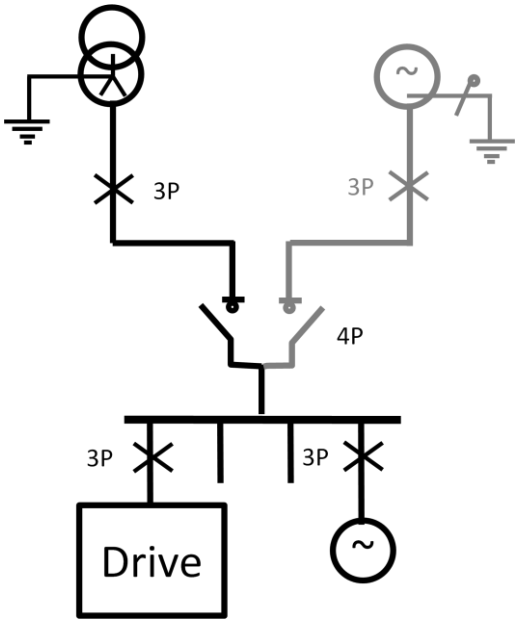


We consider a load, 3 phases or single phase (e.g. a server, a UPS, a drive, a motor).
We’ll analyze first a simple system without UPS (as the UPS is a secondary source which might interfere with the neutral referencing).
Initially, the system has one source (black part of the drawing in Figure 15).
In that case, the busbar has normally a 4 poles disconnect as the main incomer of the switchboard (requirement of IEC 60364-5-53 § 536.2).
Obviously, an opening of the 4P disconnector shall not damage the loads.

➔ As explained above, the only condition for a 4 P gear is to respect the *simultaneity* of the 4 poles switching of less than 2 mS.

When we create a PC type switch based ATSE by adding a 2nd 4P switch connecting a 2nd different neutral (adding the grey part in the diagram in Figure 15), the situation is equivalent.

Figure 15 - Neutral referencing without UPS

We understand first why this 4P ATS with a true padlockable zero position can be used as the incoming disconnect.
We understand also that a transfer through the zero position is absolutely clean for the load, provided the 2 mS simultaneity condition is respected.

Hence, in that case the answer to the above question is again NO: the referencing of the Phase+Neutral system to ground can be interrupted during a transfer done with a good quality switch (simultaneity 2 mS).

Let's see now the situation with a UPS in the middle.

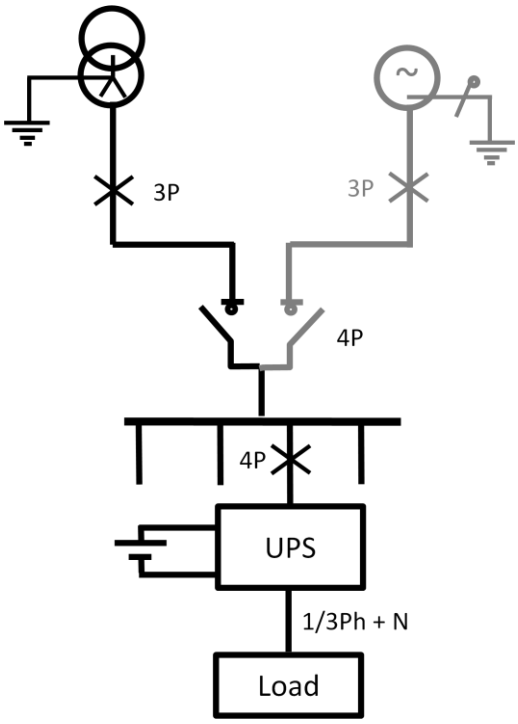


Figure 16- Neutral referencing with UPS

The difference comes from the fact that the UPS can be considered as a source of a Phase+Neutral system to the loads.
Reminder of the question: "should the Phase + neutral system of a load be always referenced to ground?" or "is it possible and sound for the loads to switch off the 4P Phases + Neutral between the transformer and the UPS?"

Let's pinpoint again that we speak of isolating Phases + neutral together, simultaneously, not switching off the neutral with the phases still connected. The latter case is a floating neutral, damageable for the loads after 5 mS!

1st analysis: everyone will agree that the loads are not damaged and are still fed if the 4P disconnect upstream the UPS (mandatory for maintenance) is off.
Hence, it's a first answer: the non referencing to the ground of a sound Phase + neutral system is harmless for the loads.

2nd analysis: When a UPS is disconnected upstream on the 4 poles, his output Phases + Neutral system is floating Vs ground (in the example in Figure 17, by 10 VAC). It's exactly the same situation as in a IT system. This situation is also clean and sound for the loads.
20 volts stable can be used as a specification of UPS having a good behavior Vs grounding issues. This value is harmless for modern equipments (see below explanation on the origin of the low values of $V_{N/GND}$).

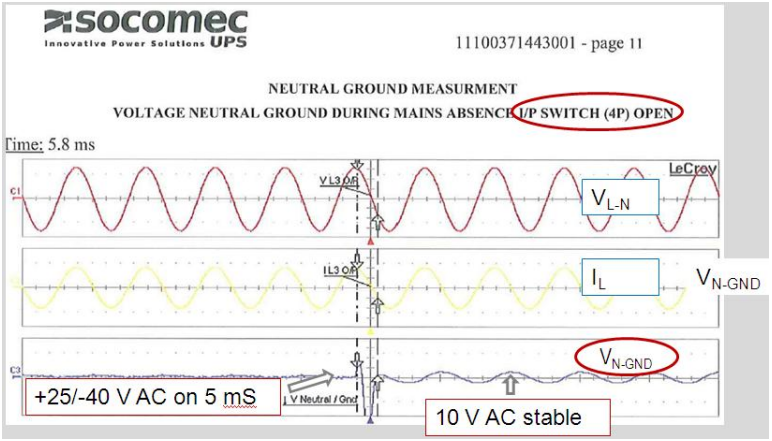


Figure 17 - Output bias without neutral reference in a UPS

In both cases, the 2 single requirements on the Phase + neutral system during the switching are:

1. The Phase Vs neutral voltages must be within their specifications (amplitude, rotation, phase, frequency).
2. The voltage Ph/GND and N/GND must be within the functional limits of $V_{N/GND}$. Even though this value is generally not specified by the manufacturers, a value of 30 V has been found harmless.[2]

The galvanic isolation of the power supply Vs the frame, thus the ground is not a limit. The limits of this isolation is generally 4000 V AC 1 mn.

[2] Reference: Clearing Up Neutral-to-Ground Voltage Confusion
Feb. 1, 2007 Tom Shaughnessy, PowerCET | Electrical Construction and Maintenance

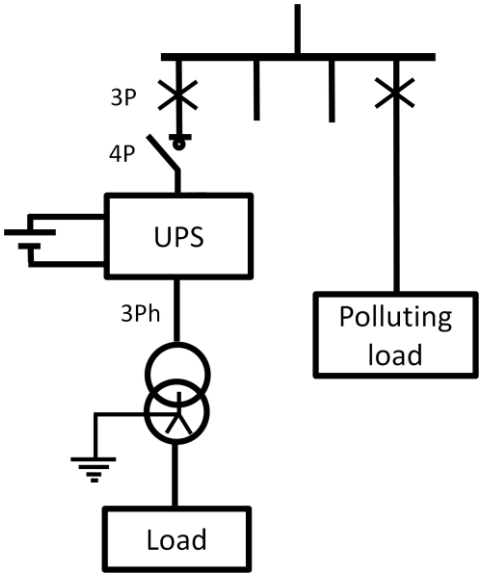


**Figure 18 - Neutral referencing with UPS , isolation transformer, separated feeders**

In the cases of very sensitive loads which could even not accept this voltage sag and swell, the customer has to use an isolation transformer and ground the neutral on the secondary side.

Additionally, “Separated feeders” technique can be used to feed separately polluting loads and sensitive ones. It will reduce the Inter system Ground noise from adjacent loads by decoupling.

Additional care will be taken on the implementation of the earthing to reduce capacitive coupling (simple example: connection to the earthing terminal, not to the metallic structure!).

Lastly, the cables for neutral and grounding can be increased in size to reduce the radiated 3rd harmonic pollution.

So, we see that globally, the Phase + neutral system of a load doesn’t need to be always referenced to ground provided that the proper criteria are respected. This affirmation seems in contradiction with the common belief “*$V_{N/GND}$ must always be less than X volts (X = generally a few volts)*”. It is not. There are 4 main reasons to explain that.

Firstly, the $V_{N/GND}$ is used to qualify the quality of the installation in case of 3rd harmonics, not to allow/forbid floating Phase + neutral systems.

In a normal case, with Neutral and phases connected, a high ratio of 3rd harmonics will induce a current in the neutral wire, which will reflect into a $V_{N/GND}$ at the load level ($V_{N/GND}$ = 0 at the transformer level).

We have to note that this phase and amplitude shift applies only to the Neutral Vs GND at the load level, the phases being still in line with the transformer. Hence, the phase to neutral voltage is perturbated.

In that case, the $V_{N/GND}$ reflects a poor quality of the installation, with risks of radiated 3rd harmonics, disruption of the servers, $V_{Ph/N}$ out of spec, etc.

Then, some servers manufacturers specified a limit to the $V_{N/GND}$ as a “marker” of the 3rd harmonic level. But the goal is not to say that the Phase + neutral system can’t float Vs ground. By an undue extrapolation, any $V_{N/GND}$ is suspected to be bad for the load. Which is wrong when both phases and Neutral are floating in the same manner vs GND (example again: IT systems).

Secondly, this belief is based on technical issues which were common in the 1980s, but gone now.

The $V_{N/GND}$ was an issue at that time, as electronic equipments got sometimes their power supply NOT isolated from frame, then from the ground, making them extremely susceptible to earth/ground-referenced offset. Other issues came as well from RS485 links connecting the internal supply to the frame.

Now those issues are no more found in equipments. But the fear still roams around.

Thirdly, the issue is tremendously increased in the US with multiple grounding of the neutral (creation of stray voltages at 60 Hz). US hosting a lot of large players in the electronic field (servers for instance), this issue has been brought by them to a level without any relation with the clean situation of the neutral in IEC based installations, increasing the fear of the users.

Fourthly, the complexity of the issue as explained above makes very difficult to the common man to get rid of a so simple rule.

As a conclusion:

- The entire Phase + neutral system can float Vs GND in any earthing system.
- The neutral can be interrupted along with the phases under condition of a proper switching (simultaneity 2 mS). Then, the use of 4 poles open transition ATSE upstream of 3 Ph+N loads is sound, allowing a proper setting of RCDs & GFP devices.
- Developing $V_{N/GND}$ is an issue often met in NEC based installations with multiple grounding of the neutral, much less in IEC ones which respect the unique grounding of the neutral.
- For extremely sensitive system, isolation transformer, proper cabling and increased cable size are required.
- Modern equipment don't show anymore any high susceptibility to the $V_{N/GND}$ as such, yet the sensitivity to the 3rd harmonic pollution remains unchanged.

# 4. Reliability issues

The reliability is differently perceived from various businesses. It depends mainly on the cost of the interruption, in terms of business: Low cost, reliability cost is low, reliability concern is also low. High cost, the reliability becomes essential. We discuss in the latter case framework, obviously.

Reliability encompasses several issues

- Devices reliability, expressed in MTBF value
- Maintainability expressed in MTTR, but also in terms of skills to maintain an installation.
- System Availability expressed in % ($A = \frac{ON_time}{ON+OFF_time} = \frac{MTBF}{MTBF + MTTR}$) or duration of unavailability per year.

**Device reliability has mainly to do with the protection!**

As we said above, asking a CB to undergo transfer burden, simply reduces its reliability with each transfer. Each switchgear obeys a Weibull law which can be realistically like the following one:

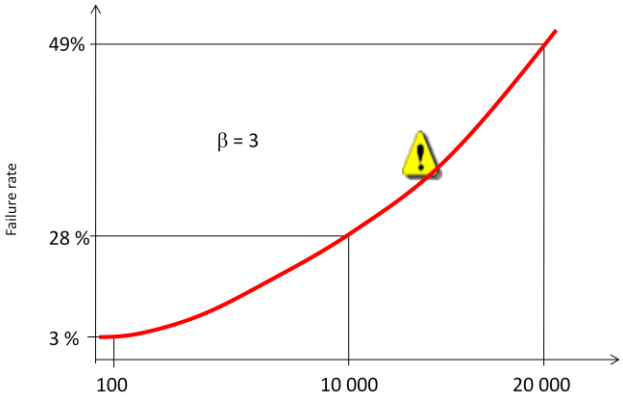


Figure 19 - CB Failure rate Vs number of operations

We consider that after 20 000 operations (twice the average maximum specification !) the failure rate is 50%. It is a very fair hypothesis!

With a coefficient Beta = 3 which gives a proper shape, we can see how the failure rate increases regularly with number of operations.

The tricky point is that it is the **failure rate of the protection !**

We have here one of the main reason why people tend to select ACB instead of MCCB down to 630 A. MCCB motorization are well known for being less reliable, the mechanism being more complicated than the ACB one.

**Maintainability has mostly to do with the motorization.**

The return of experience shows that the contact system is seldom a cause of failure. We could say, fortunately! The main cause of unreliability, being ATSE or motorized CB is the motorization.

To improve the maintainability, designer generally put withdrawable ACB to speed up the change process, as it's not possible to change the ACB motor in situ.

- First consequence: you need to have WACB of each rating in stock. And the handling of a 2000 A WACB is not that easy (forklift, etc).
- Second consequence: we are obliged to stop the panel for this operation.

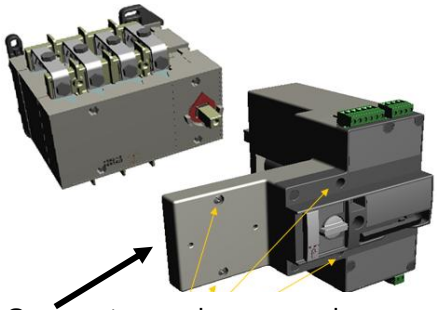


If you want to eliminate those 2 issues, you need to allow for a **change of the gear motor of the ATSE "live", without stopping the panel.** The MTTR of the panel can be brought to 0, provided the maintenance procedure revealed the fault during inspection. An alternative is to change the gear motor in a preventive way, also without interrupting the panel, certainly the best way to keep the MTTR to 0. It's easy and the spare parts stock is minimum…

Figure 20 - Live maintenance of ATSE gear motor

## 5. Interaction of Protection and Transfer

When using CB type ATSE, the CB is generally used for Protection and Transfer. Its use as a transfer device creates additional wear and tear which reduces significantly the reliability of the protection. This is the main trick that most of the people overlook.

- The failure rate increases inexorably, leading in highly perturbated networks, to have protection devices with a MTBF [3] as low as 80 000 h instead of the expected 800 000 h!
- In addition, to operate a CB in a ATSE, one has to add several devices which inherently reduces the CB reliability: motor, interlocking cable or rod, coils, cabling, external controller.
- Mechanical interlocking cable/rod can be removed, leaving the system in a dangerous status.
- Lastly, the MTTR[4] of a CB is not optimized (a CB is basically designed for a standstill operation to keep its reliability high) and changing a gear motor will require to stop the panel for a drawout.

In addition to the reduced reliability of the protection, using CBs for TSE tasks generally leads to a non optimized transfer implementation (as the CB type offers no flexibility in the design), leading to high $I_{cw}$ busbars and panels, thus unnecessary over costs and layout.

.

We can see in the following diagrams that the left one leads to oversize the busbar. The right one respects the selectivity rules, allows a better continuity of service, better protection. Cost saving compared to the left one is approx 20% !! Not obvious when you stay at the "feeling" level. The devil is in the details.

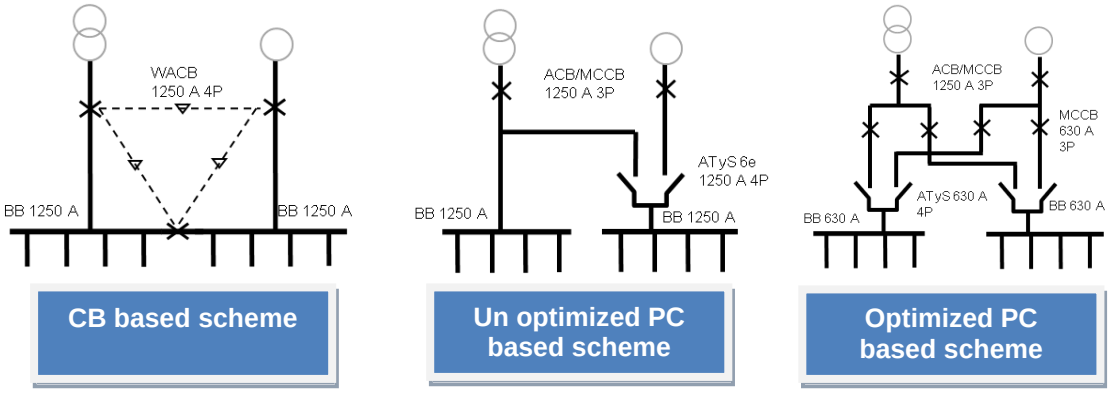


**Figure 21 - 3 typical Protection & Transfer architectures.**

This over cost can be understood easily. Generally, we hear people say *"I have already the CBs, I can use them for transfer"*. Apparently a good solution, as it avoids to complicate the drawing. "God is One" and they add a so simple dotted line with the triangular symbol of interlocking! One needs to go down to a detailed cost comparison to understand the real cost of this "so simple" add-on. Let's see:

- The unit over cost of a CB used for transfer Vs the same CB used for protection only, varies from 1.2 (min value on a 3200 A) to 3 to 5 on lower ratings (500 A). This is due to the addition of the various devices needed for the transfer function (4 poles instead of a 3 poles, motorization, withdrawable instead of fixed, mechanical interlocking, controller, coils, wiring, chassis).
- Generally, people use WACBs for CB based TSE (for reliability reasons, see § 4), which creates another unit over cost of approximately 1.6 in the range 630 A to 1250A where this substitution is applicable.
- The design flaw described above of a poor selectivity increases the panels cost.

All those costs are detailed in the study on a 1250 A panel, chapter 8, Cost issues.
The conclusion is simple: **Separate Protection and Transfer** and optimize both functions. In most of the cases, the optimization of the protection pays the TSE and more!

[3] MTBF : Mean Time between Failure
[4] MTTR : Mean Time To Repair.

## 6. ATSE type, open or close transition or BBM vs MBB

Again an example of complexity hidden behind an apparent simplicity.

An Open transition (or Break Before Make - BBM) TSE will guarantee that both sources will never be connected. This is a main safety characteristic of TSE to avoid any connection of two sources which are not synchronized. To guarantee this feature, the TSE will provide a Zero position and an interlocking system. It can be achieved in switch based and CB based TSE, but not in double throw, intrinsically without zero position. People point the blackout which occur on the return from the emergency source to the utility main source. We could avoid it: *just put a MBB TSE*…

A close Transition (or Make Before Break - MBB) TSE will allow a connection of both sources prior to the disconnection of the 1st source. Obviously it requires a synchronization of the sources.

A close transition can be achieved by any type of TSE. The only condition is to ensure a maximum transfer time of less than 800 mS, which is the maximum blackout that synchronization relays can handle.

When the Sync. relays approaches the conditions of synchronization, it will anticipate the move and request a transfer some time in advance. Beyond 800 mS, the algorithm doesn't work and the closing of the 2nd gear will happen in "out of sync" conditions.

Despite its apparent simple explanation, the MBB solution creates some issues

- ⇨ First issue: The sync panel becomes a single point of failure and its failure would bear dramatic consequences: fault equivalent to the maximum short circuit of a transformer in case of transfer out of sync, no transfer at all in case of impossibility to sync, etc.
- ⇨ Second issue: a synchronization with the grid requires an authorization of the utility, sometimes easy to get, sometimes not…
- ⇨ Third issue: if the previous points are accepted or overcome, the cost of the sync panel and MBB gears causes a new headache.
  - A 2.5 MVA sync panel would cost around 120 KUSD, MBB gear will add a few thousand dollars to the bill.

So the ultimate question is not "I need a MBB" but *"is a MBB really worth it?"* And this is really the key point: I spend for more features, in return I expect gains which will pay back my expenses.

We put aside the strange reasons that I heard a few times, like "*we don't want to interrupt the board room a second time*" (a simple low power UPS would be a much better solution) or "*I use MBB to hide the misbehavior of the lighting system on each interruption*" (better to tackle the lighting control system issue or put a UPS).
Critical buildings like Data centers have such a high stake that the generalization of UPS eliminates the need of MBB.

That said, the vast majority of remaining cases when a MBB would be required is in the Industry: it bear high losses on each minute of interruption and the very high power demand don't make the UPS a viable solution. The MBB would be a kind of "half solution", between the Data Center one (full UPS backup) and nothing.
Hence the problem is now simple:

1. understand the process, evaluate the cost/mn of blackout.
2. evaluate the frequency of interruptions per year. Then, with 1, the outage cost / y.
3. evaluate the over cost of the MBB solution
4. Compute the Return On Investment (ROI)

**Example 1**: a hard disk factory, with a very sensitive process (each blackout of more than 0.6 s requires 2 hours to restart the production), installed in a country with a very stable network (< 1 S / year), 5 MVA, no UPS on the process, an output of 1280 $/mn, MBB over cost approx. 130 K$.
**The MBB ROI is 1.7 year. Worth it.**

**Example 2**: a 5 stars hotel or a factory or retail centre, the process restart in less than 5 mn after each blackout, in a country with a poor network (6*1 h/y), a cost of interruption of the essential loads of 8 $/mn, MBB over cost approx. 30 K$: **The MBB ROI is 241 years.** No comment.

**Special case of Hospitals**. In most of the countries, Health standards require a regular testing of the emergency supply. This test will definitively create some disturbances in the activity of the hospital despite testing starting early morning. The MBB is proposed in some countries to avoid the burden of the 2nd blackout on return, which generally occur during the full operation.
We studied 2 cases, France and Australia.

In France as in most of the European countries, MBB is forbidden simply for reliability reasons. As said above, the implementation of a MBB solution brings two major drawbacks in term of **reliability**: The **Sync panel and the TSE itself**, intrinsically more complex, less reliable and with more dangerous failure modes (permanent connection of sources).
A thorough study in the French hospitals shown that the so call *disturbances* created to the medical and administrative personnel by the tests live, where instead

- either minor issues (*my computer stops*, *my coffee machine programmer is reset)*
- or design flaws in the installation: (*wrong connection of the incomer measurement point*).

Obviously there was no issue in the operation theatre and other major functions. To that extent, it can be said that the live test helps to improve the installation and reversely, a MBB would have hidden the issues in addition to the over cost.

A true story: In Australia, there is no heavy government requirement but for doing a regular testing and the MBB is implemented easily. Nevertheless, we met a happy electrical operation manager in one of the biggest hospitals “down there” and he was happy NOT to have a MBB!
He was using the compulsory test for testing the Diesel Gensets, yes, but, more importantly for him:

- ⇨ To train his team on emergency procedures to avoid any critical mistake in case of real blackout.
- ⇨ To train the medical and administrative staff on how to use the secured / non secured outlets sockets and then optimize his secured installed power.
- ⇨ To detect hidden issues in the electrical installation which emerge only during backup.

It looks like to be the same situation as in France, doesn’t it?

The test was sometimes – but not always - ran during one full day to reduce the disturbances of the return to Mains on administrative people. That’s it.

He told me, “*Obviously, I can achieve the 2 major goals linked to the people skills and behavior and to the installations issues, only if I run the test in real conditions without hiding the problem*!”
When professional people speak…

# 7. By Pass ATSE for critical applications

When designing critical applications, the designer often has to cut the Gordian knot of Cost vs Availability: If we want to increase the Availability we create redundancy which creates in return an over cost and a loss of reliability (more equipment to fail). Tier system in Data Centres is the best application of this issue: Tier IV is providing a maximum Availability of the system via a massive redundancy regardless of any optimization to the detriment of the Reliability and obviously of costs. Not all applications deserve such a solution…

We shall see later the most efficient way to improve the system Availability through **architectures** (see chapter 9 Architectures).
When this kind of solution is not used, a ATSE might be in a position of Single Point of Failure for a critical load. In that case, the MTTR should be reduced to the bare minimum to bring the Availability to the max ( $A = \frac{MTBF}{MTBF + MTTR}$ ).
For this purpose a By Pass ATSE can be used: MTTR = time to go to the panel.

There are a few design issues on the By Pass ATSE:

- Operation under full load condition
- No Break By Pass

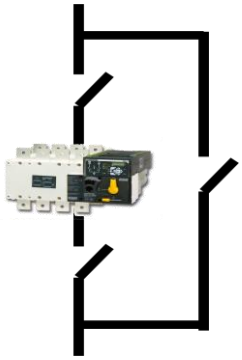

Figure 22 - general ByPass ATSE drawing

The main goal of the ByPass is to be able to bypass the ATSE either on a scheduled maintenance operation or in case of ATSE failure.

- ATSE maintenance on the gear motor is the first real issue, like on any switchgear. We saw previously that being able to do it "live" without interrupting the supply is the best solution (provided the ATSE is designed for that). Thus, it doesn't require any By Pass.
- **ATSE maintenance on the main contact**s should not happen. Modern gears don't ask for that anymore. Time has gone when ACB had to be open to change the contacts! It's the same situation for ATSE.
  - ⇨ Unless the technology could not guarantee a "no damage" operation. Some double throw ATSE for instance could be damaged when manually operated under load, thus leading to a compulsory maintenance contract.
- **By Pass in case of ATSE failure** is therefore the main issue. It has to be **possible under full load condition**. Nowadays, it's no more acceptable to be obliged to disconnect upstream (in other panels…) before by passing, especially in an emergency situation. The designer will take care of specifying the compliance with **IEC 60947-3** for that.

**The By Pass should also be a No Break type** for a maximum continuity of service. It means, it is able to bypass the main ATSE from one source (Mains generally) under full load condition, without interrupting the supply (I4 in Figure 23).

The **Double Line** facility allows to change over on the emergency source in by pass position.

It those conditions are respected, a ByPass ATSE is an interesting alternative for critical applications to minimize the effects of a single point of failure. We shall see some applications in the chapter 9 Architectures.

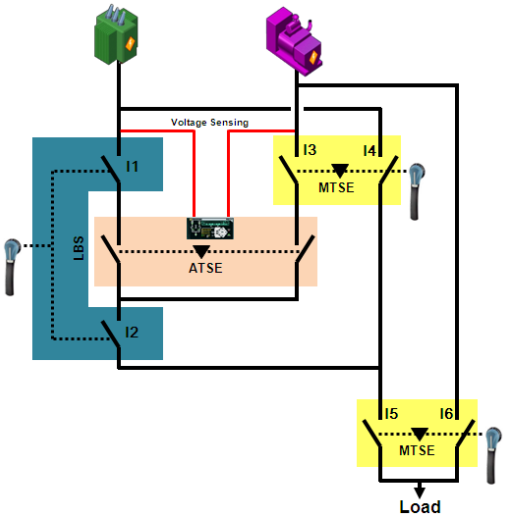


Figure 23 - Double Line No Break By Pass

## 8. Cost issues, analysis of 7 versions of a 1250 A ATSE panel

We have seen in a precedent part (chapter 5 Interaction of Protection and Transfer) that the use of CB in an ATSE function creates over costs on the protection. To which extent? Does it favor a solution with separated protection and transfer devices?
For achieving this goal we did 2 panel studies for a rating of 1250 A. We compared two CB based diagrams it for

- a 3 CB/2 busbars diagram (Figure 24)
- a 2 CB/1 busbar one (Figure 26)

1250 A rating was selected as representative of a large part of the installations and allowing to highlight the optimization of the protection in the most efficient way.
It allows as well to extrapolate pretty securely towards lower and higher ratings.

The inputs and variants of the first one @ 3 CBs are as following:

- Loads: 2 busbars of 630 A maximum demand.
- "3 CB" scheme done with 2 functional uses:
  - one essential and one NON essential busbar. (Resp 2 & 3 in Figure 24)
  - two essential busbars (Resp 4 & 5 in Figure 24).
- Consideration of a non optimized protection (Resp 2 & 4 in Figure 24) and an optimized protection with addition of intermediate CB as soon as the current carrying capability changes (Resp 3 & 5 in Figure 24).
- Lastly, analysis of the optimization of the protection: fixed MCCB instead of WACB (Resp 2 & 3 in Figure 24) whenever possible.
- Switchgear costs are the one born by the panel builder.
- The study is done in Singapore, a country representative of evolved countries with high man*h costs. Busbars are in copper. Later on, we did the same study in India, Al busbar, low man*h cost country. Results are shown below

The analysis of the results is shown in Figure 25.

In all cases, even the least optimized drawings with a PC ATSE are at the same cost than the CB based one. The advantage for the PC type ATSE architecture can go up to 50% in cost.
The most comparable case (1 Vs 5 in Figure 24) shows a gain of 22% in cost of the panel and 33% in footprint.

- These values are the expression in hard currency of *"using specialized devices for transfer and protection optimizes the whole installation, functionally and in cost"*.

This cost reduction adds to the main advantage of the PC type drawing: a protection without anymore issue (no more 2 CBs in series) and of maximum reliability.

For the drawing @ 2 CBs, the principles are the same. The configuration is just simpler.
The advantages are less in cost, still the major advantage to have at all time a protection fully reliable is there.

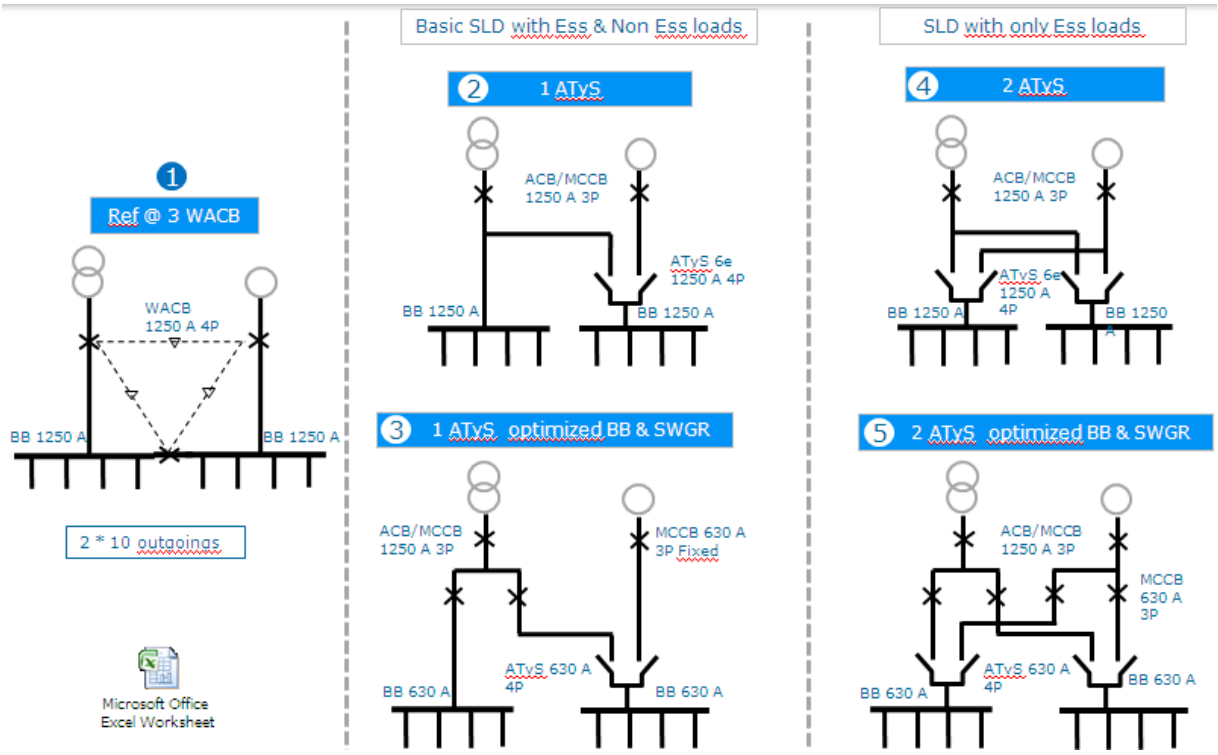


Figure 24 - 4 architectures, PC type ATSE based, Vs a 3 CB one, 2 busbars.

| metal sheet unit cost 150 | 1 | 2 | 2.1 | 3 | 3.1 | 4 | 4.1 | 5 | 5.1 |
|---|---|---|---|---|---|---|---|---|---|
| Metal sheet cost (SGD) | $3,965 | $2,721 | $2,851 | $2,590 | $2,097 | $2,554 | $2,554 | $2,227 | $2,227 |
| | Ref | -31% | -28% | -35% | -47% | -36% | -36% | -44% | -44% |
| Bus Bar cost (SGD) | $3,622 | $2,582 | $2,655 | $1,876 | $1,883 | $3,226 | $3,226 | $2,370 | $2,370 |
| | Ref | -29% | -27% | -48% | -48% | -11% | -11% | -35% | -35% |
| Switch gear costs | 20,970 | 12,326 | 13,502 | 9,545 | 13,947 | 19,726 | 22,428 | 17,636 | 20,337 |
| | Ref | -41% | -36% | -54% | -33% | -6% | 7% | -16% | -3% |
| **Panel cost** | $34,268 | $21,154 | $22,811 | $16,814 | $21,513 | $30,607 | $33,849 | $26,680 | $29,922 |
| | | -38% | -33% | -51% | -37% | -11% | -1% | -22% | -13% |
| **Footprint** | 1.92 | -40% | -33% | -47% | -40% | -17% | -17% | -33% | -33% |

Figure 25 - Cost & footprint of the architectures, two busbars.

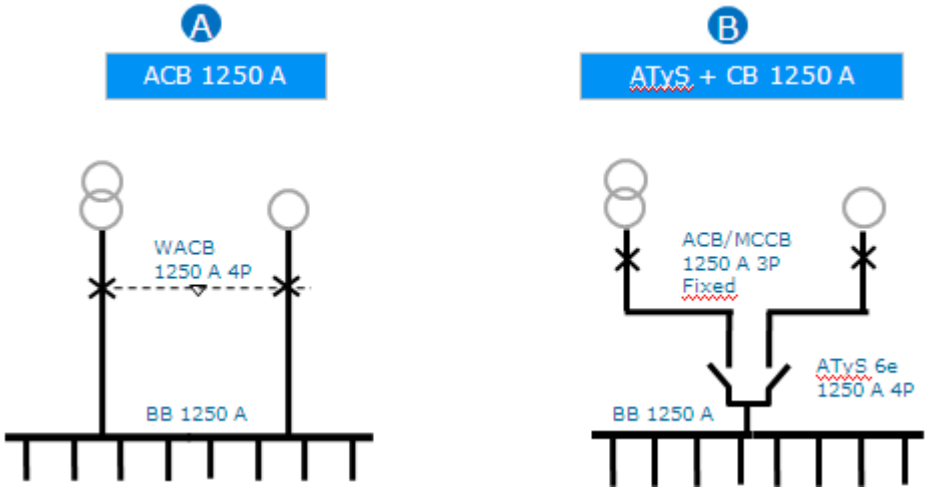


**Figure 26 - 1 architecture, PC type ATSE based, compared to a 2 CB one.**

**Figure 27 - Cost & footprint of the architectures, one busbar.**

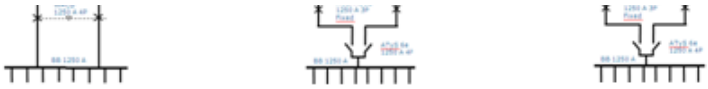

| metal sheet unit cost 150 | A | B | B.1 |
|---|---|---|---|
| Metal sheet cost (SGD) | $2,227 | $2,097 | $2,227 |
| | Ref | -6% | 0% |
| Bus Bar cost (SGD) | $1,603 | $1,347 | $1,421 |
| | Ref | -16% | -11% |
| Switch gear costs | 14,700 | 12,326 | 15,028 |
| | Ref | -16% | 2% |
| **Panel cost** | $22,236 | $18,924 | $22,411 |
| | Ref | -15% | 1% |
| **Footprint** | 1.28 | -10% | 0% |

**The comparison for other ratings** can be done by a simple analysis.

| Ratings | Comment |
|---|---|
| Lower ratings, down to 250 A | The advantage in cost and reliability increases.<br><br>▪ The unit cost of a 800 A CB for ATSE goes up to 3 times its unit cost as simple CB (1.7 @ 1250 A).<br>▪ Reliability of MCCB motorization is extremely low compared to PC type or ACBs. |
| Higher ratings, up to 3200 A | The advantage in reliability, operation and maintainability of the protection is a major advantage. Advantage in cost is reduced.<br><br>▪ for the PC based ATSE used in higher level of the SLD, with impact on the up time of the whole installation.<br><br>The advantage in cost is not significant, but still there.<br>▪ We can extrapolate 5.1 & B.1 cases above (same type of CB), with an added cost of the ATSE function reduced a bit. |

**Complementary analysis in India**: Aluminium busbar, low man*hour cost.

The panel design is quite different in India, owing to the general use of aluminium busbar. In addition to that, the man*hour cost is low and should impact the comparison.
Nothing of that! The diagram below shows the result of the same study, done with a panel builder.
The case 2, 4, 5 of the above cases are compared. The results are very much similar. There is no doubt: using the adapted gears allows a tremendous optimization of the installation, whatever the type of panel design and busbar The advantage is sound and perennial.

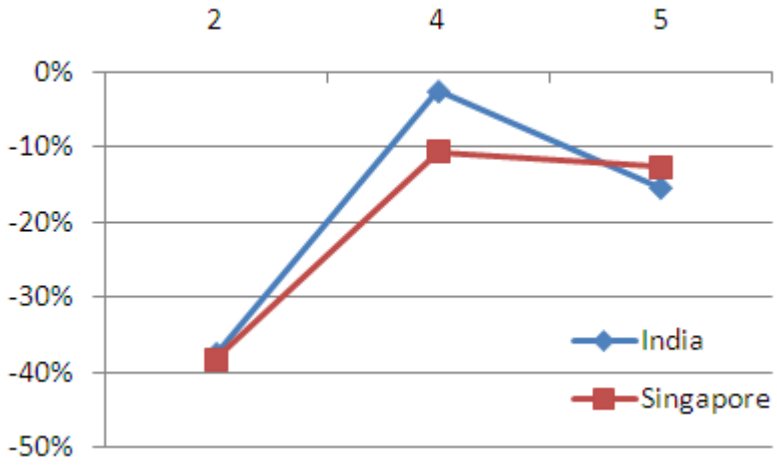


Figure 28 - Cost comparison India / Singapore

## 9. Architectures ATSE based in high reliability installations.

This topic is vast and would deserve a complete book. Nevertheless, we'll give here a few guide lines to optimize the installations in reliability and cost.

1. Separate Protection & Transfer gears
2. Eliminate Single Point of Failure (SPF) in high power installations
3. Favour the integration of functions (ex: disconnection & transfer)

We have seen the principles 1 & 3 in the course of this article. We'll therefore analyze more in depth the principle 2, eliminate SPFs.

A short digression first from a semantic standpoint: The principle 1 & 3 above could appear as contradictory at first sight. Separation (one to many) is the contrary of integration (many to one).



The contradiction is only apparent. The reason is that an integration to be beneficial must show a positive balance of Benefits vs Drawbacks.
* Example of benefit: it removes what Value Analysis names as "Design function" (interfaces, connections, support, etc).
* Example of drawback: requires a design change to integrate both functions (architecture, components, software).

Example of good integration: tripping relay inside the CB or transfer controller inside the ATSE.
Example of bad integration: Protection and Transfer. The analysis carried out above shows that it leads to a negative balance of benefits Vs drawbacks. The major reasons are

- the non real redesign of the CB to integrate the TSE requirements. It's just a add-on, not an integration.
- The conflicting features of Protection and Transfer (Icw, maintenability, reliability).

Let's see now the principle n° 2, eliminate Single Points of Failure.
It can be applied on several parts of the installation. We'll just pinpoint two of them, the ATSE and the Sync panel.

**REMOVING THE ATSE SINGLE POINT OF FAILURE.**

Let's consider successively both architectures below, which could be for any hospital, data centre, airport, all facilities with high availability requirements.

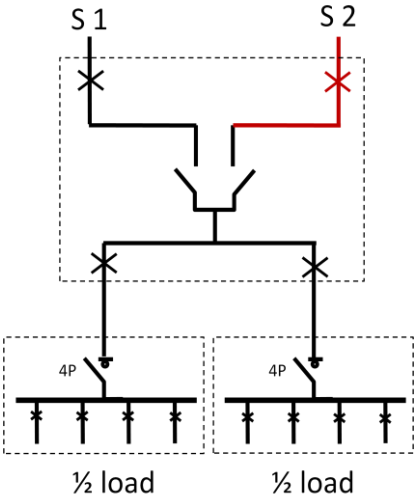


Figure 29 – SLD with SPF

The first one is very often seen up to 4000 A (present limit of PC type ATSE).
Obviously, the ATSE is the SPF. Any fault on the ATSE and both half loads are OFF, the whole installation is in the dark.

Adding a ByPass on the ATSE won't solve the issue. It's what we call in French "a plaster on a wooden leg". Better not to have a wooden leg.

In addition, the panel design is not easy: where to put the upper panel? Close to source 1, source 2, what's about the length of busways between the sources and the protection (should be less than a 15 meters).

If this solution is acceptable in standard buildings, the SPF drawback bars it from high requirement installations.

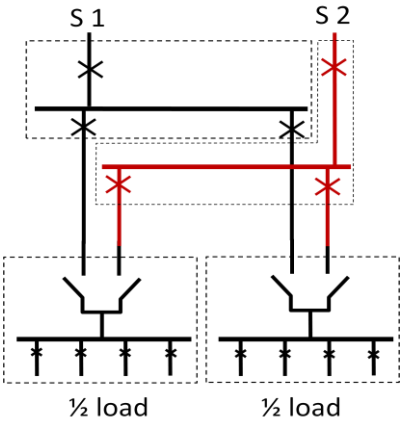


Figure 30 – SLD without SPF

The second one is clearly the good alternative to remove completely the SPF.

Both upper panels are easy to design and place close to the sources to optimize the availability and reduce the costs of busways.

ByPass are probably no more necessary, if the installation can survive in a downgraded mode. It depends on the installation.

The cost is less as we avoid ATSE of high ratings known to be extremely expensive, with necessity to have a ByPass.

This principle can be applied to any architecture with great profit in availability, layout and cost.

For the sake of the history, the situation with a 2 CB + Bus Tie would have been worse that with the single ATSE:

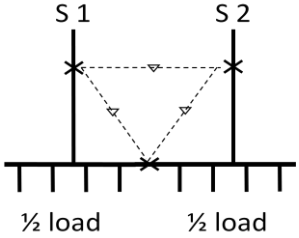


In that case, The SPF is the sum of the 3 CBs + the interlocking system + the ATSE controller. No need to say that from a reliability standpoint this solution is the worst.

## 2 examples with consequences on gears cost

### Initial SLD1

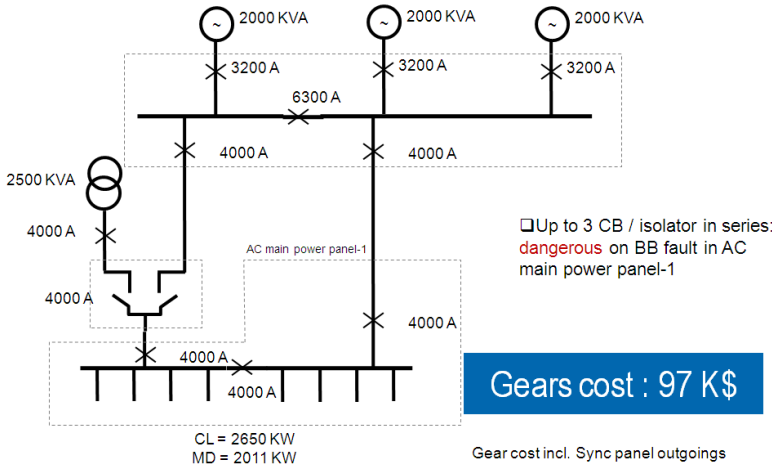


Design flaw: Up to 3 4000 CBs in series in case of busbar fault.

Plenty of 4000 A gears.

Figure 31 - initial SLD1

### Optimized SLD1

- No more selectivity issue
- Less gear of LESS Amperage.
- Onload operated ByPass on ATS to increase Reliability
- BB and panel optimization (Rating divided by 2!)

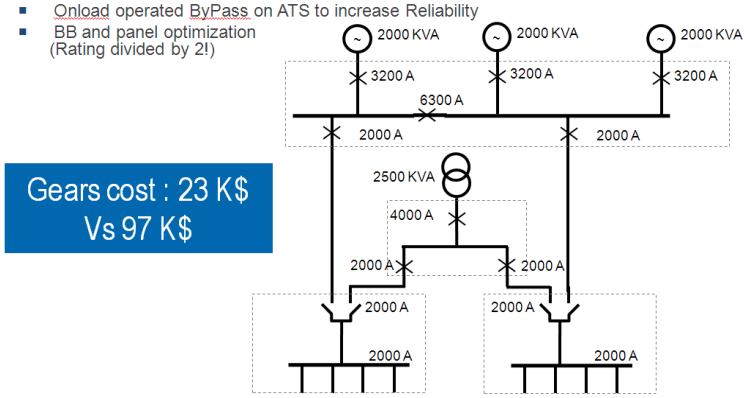


No more selectivity issue

Much better reliability

Optimized bus bars and gears

Huge cost reduction on gears and panels

Figure 32 - Optimized SLD1

### Initial SLD2

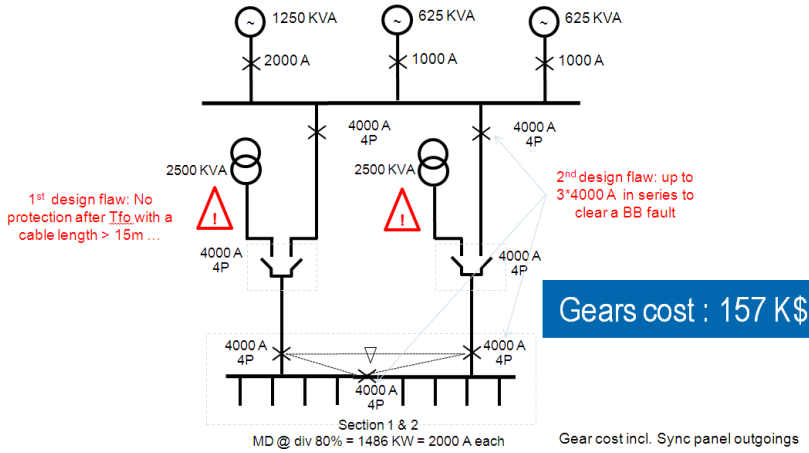


Figure 33 - Initial SLD2

Design flaw: Up to 3 4000 A CBs in series in case of busbar fault.

Plenty of 4000 A gears.

### Optimized SLD2

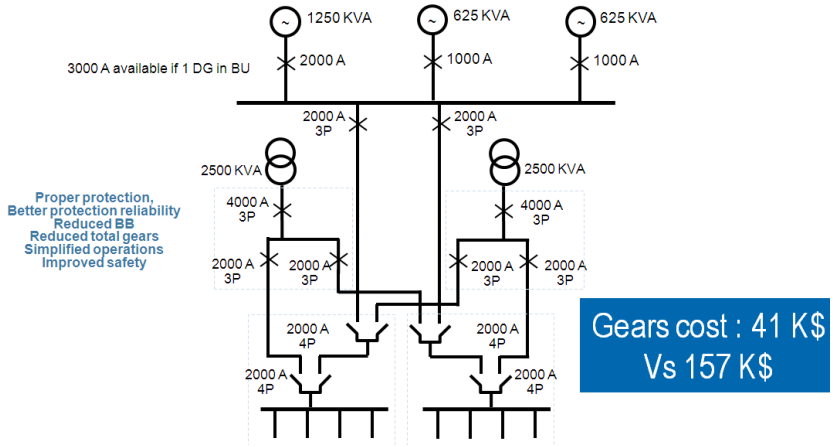


Figure 34 - Optimized SLD2

No more protection issue

Much better reliability

Optimized bus bars and gears

Huge cost reduction on gears and panels

Those 2 examples are showing very clearly the gain we get by optimizing the installation through a distributed architecture respecting the basic principles of selectivity and limitation.

**REMOVING THE SYNC PANEL SINGLE POINT OF FAILURE.**

The paralleling of multiple Diesel Gensets (DG) is a common practice which has several advantages: flexibility to add DG in the step up period to save investment expenditures, flexibility to run more or less DG in case of a very much variable load, easiness of maintenance, backup DG, rotation of DGs, easiness of design, as the designer has to care about the sync panel late in the design.

But the Sync panel has a few drawbacks:

1) for sensitive applications with high availability requirements, **the Sync panel is a SPF** and a serious one. Any failure on the sync panel bus bar or in the synchronization mechanism will remove the backup power for the whole installation. Most of the time, designers add bus couplers on the Sync panel bus bar to reduce this risk by creating an acceptable downgraded mode.
2) It requires a high level of operation and maintenance skills, not always available in emerging countries.

Can we get rid of those drawbacks with still most of the advantages of the sync panel? The answer is YES to some extent, with a trade off more or less favorable depending on the application requirement.

Let's consider the following architecture for a huge campus of IT Enabled Services buildings. Sync panel bus couplers are not represented here for the sake of the clarity. Let's pinpoint the size of the Sync panel bus bar: 6400 A…

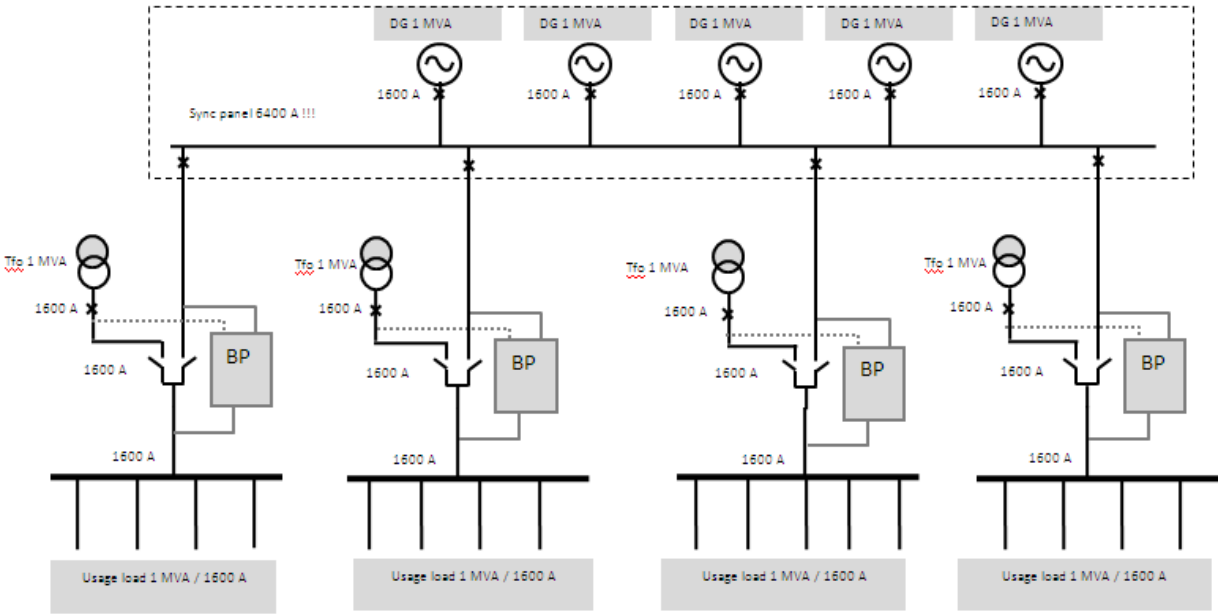


**Figure 35 - ITES building with Sync panel.**

Let's consider now the alternative solution in Figure 36 - ITES building without Sync panel.

Main advantages

- No more SPF
- Simple maintenance and operation
- Huge cost and layout reduction

Drawbacks Vs initial solution

- Less flexibility in the step up process. To some extent the backup DG can be used to feed several main switchboards, but this solution reaches quickly its limits. In that case the step up was quick (less than one year) and the impact on CAPEX is little.
- No flexibility in the load variation. In that case, it's acceptable, as the ITES building is running 24h/7d. The air conditioning + lighting + servers requirement is quite constant except during the short winter time when it has been considered acceptable to run the DG at 55%.

The advantages of having a DG backup or to rotate the DGs are kept.
Even in case of a closing period, in case of power outage, the main DG are not started and the backup DG is used to feed the essential utilities of all buildings of the campus.

So, after analysis, we can see that the drawbacks are acceptable for this application in this particular instantiation.

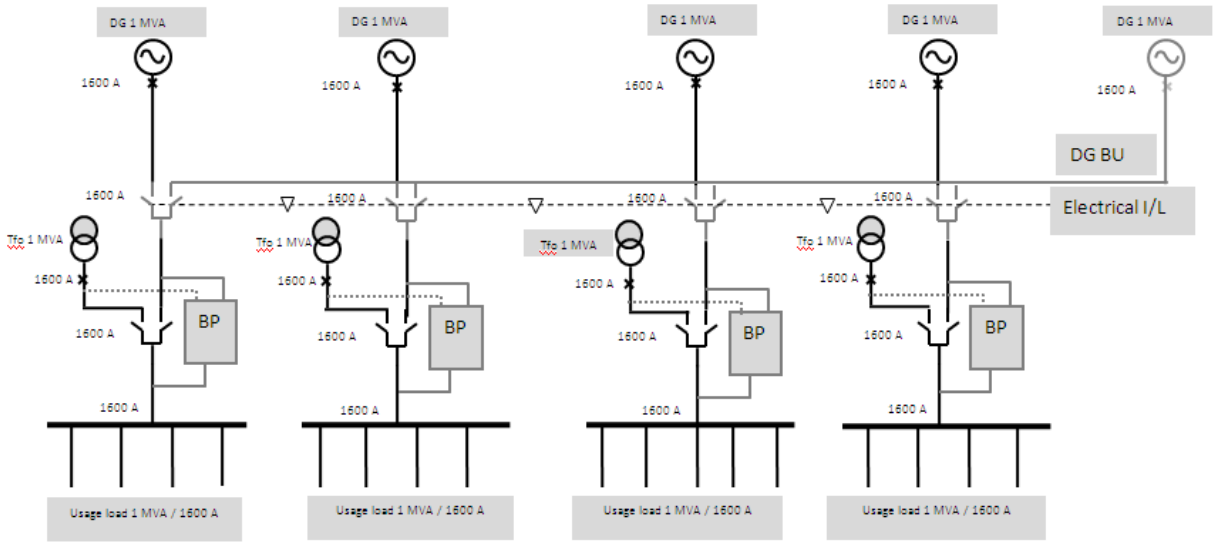


**Figure 36 - ITES building without Sync panel.**

We can define a simple set of criteria which help in the decision to study an alternative solution, "sync panel free".

- The loads and their seasonal variations are limited. This is the case of most of the applications, except some particular factories like cement plant for instance.
- The load evolution over time is foreseen.
- The step up period is limited.
- The main load centers are quite similar in size. This will optimize the cost by reducing to backup DG and distribution to the bare minimum (back up DG KVA = Max[DGi KVA]).

We can see that the above criteria are covering most of the buildings and infrastructure applications.

# End of the document

# Table of figures

Figure 1 - UL & IEC products standards ..... 2
Figure 2 - example of pulsed current higher than In ..... 4
Figure 3 - relation between overload and Icw ..... 4
Figure 4 - example of various Icc in a SLD ..... 5
Figure 5 - Computing the Let Through Energy ..... 5
Figure 6 - AC categories according to the need. ..... 6
Figure 7 - example of a switch or P C based TSE with Disconnection ..... 7
Figure 8 - ATSE should also be a Disconnector ..... 7
Figure 9 - Drawback if the ATSE cannot switch the load in manual operation. ..... 8
Figure 10 - TSE is the only 4P gear in TNS systems ..... 10
Figure 11 - Phase system with neutral connected ..... 10
Figure 12 - Phase system with Neutral absent ..... 10
Figure 13 - Proper switching ..... 11
Figure 14 - Neutral referencing ..... 12
Figure 15 - Neutral referencing without UPS ..... 12
Figure 16- Neutral referencing with UPS ..... 13
Figure 17 - Output bias without neutral reference in a UPS ..... 13
Figure 18 - Neutral referencing with UPS , isolation transformer, separated feeders ..... 14
Figure 19 - CB Failure rate Vs number of operations ..... 16
Figure 20 - Live maintenance of ATSE gear motor ..... 16
Figure 21 - 3 typical Protection & Transfer architectures. ..... 17
Figure 22 - general ByPass ATSE drawing ..... 20
Figure 23 - Double Line No Break By Pass ..... 20
Figure 25 - Cost & footprint of the architectures, two busbars. ..... 22
Figure 24 - 4 architectures, PC type ATSE based, Vs a 3 CB one, 2 busbars. ..... 22
Figure 26 - 1 architecture, PC type ATSE based, compared to a 2 CB one. ..... 23
Figure 27 - Cost & footprint of the architectures, one busbar. ..... 23
Figure 28 - Cost comparison India / Singapore ..... 24
Figure 29 – SLD with SPF ..... 26
Figure 30 – SLD without SPF ..... 26
Figure 31 - initial SLD1 ..... 27
Figure 32 - Optimized SLD1 ..... 27
Figure 33 - Initial SLD2 ..... 28
Figure 34 - Optimized SLD2 ..... 28
Figure 35 - ITES building with Sync panel. ..... 29
Figure 36 - ITES building without Sync panel. ..... 30