SHORT FORM CATALOGUE

A complete range for metering, monitoring & power quality

2013
2014



socomec
Innovative Power Solutions

Metering, monitoring & power quality





Contents

An independent manufacturer ..... p. 4
Four key applications: the know-how of a specialist ..... p. 5
A cutting-edge laboratory ..... p. 6
A worldwide presence ..... p. 7
The benefits of the Energy Efficiency policy ..... p. 8
The benefits of working with a specialist ..... p. 11
A complete range of products to suit your requirements ..... p. 10
Selection guide COUNTIS E ..... p. 12
Selection guide MULTIS ..... p. 16
Selection guide DIRIS ..... p. 14
Selection guide for current transformers ..... p. 18

Active energy meter and concentrator *COUNTIS E*



E0x
32 A
p. 20



E1x
63 A
p. 22



E2x
63 A
p. 24



E3x
100 A
p. 26



E4x
6000 A
p. 28



E5x
6000 A
p. 30



E63
100 A
p. 32



ECi2 / ECi3
p. 34

Single & Multi-Meters *MULTIS*



I10 / I11
p. 42



I30
p. 40



V10
p. 42



V30
p. 40



F10
p. 42



L20
p. 36



L40
p. 36

Multifunction meters *DIRIS A*



A10
LV
p. 44

new



A17
LV/HV
p. 48



A20
LV
p. 52



A40 / A41
LV/HV
p. 56



A60
LV/HV
p. 62



A80
LV/HV
p. 68

Management software for *COUNTIS* and *DIRIS*



COUNTIS E and DIRIS A
p. 72

Network analysers *DIRIS N*



N300 / N600
LV/HV
p. 76

Communication interfaces



p. 96

Measurement devices



Current transformers
5 to 6000 A
p. 98

Pack adapted to existing installations



RETROFIT Line
p. 84

Monitoring software



Power Monitoring Software (PMS) ***VERTELIS VISION***
p. 90



Supervision ***ENERGY REPORTING*** Software
p. 94

An independent manufacturer

the benefit of a specialist

Founded in 1922, SOCOMEC is an industrial group with a workforce of 3200 people.
Our core business: the availability, control and safety of low voltage electrical networks with increased focus on our customers' energy performance.



CORPO 308 A

The culture of independence

The independence of the SOCOMEC Group ensures it retains control of the decision-making process, respecting the values advocated by its own family shareholders and shared by its employees.

With around 30 subsidiaries located on all five continents, SOCOMEC has developed internationally by targeting industrial and service applications where the quality of its expertise makes all the difference.

The spirit of innovation

As undisputed specialists in UPS systems, source supply changeover, power conversion and measurement, SOCOMEC dedicates nearly 10% of its turnover to R&D. This means the group devotes the resources required to achieve its ambition: to always be at the cutting-edge of technology.

The vision of a specialist

As a manufacturer with complete control over its technological processes, SOCOMEC is quite unlike the more general providers. The Group is constantly building on its fields of expertise in order to offer its customers increasingly customised, better adapted solutions.

A flexible manufacturing structure

Backed by two European centres of excellence (France and Italy), the Group also benefits from competitive production sites, such as in Tunisia, and locations in the major emerging markets (India and China).

All sites have implemented a policy of continuing development based on 'Lean management' principles; this ensures they are in a position to offer the quality, lead times and cost expected by our customers.

The focus on service

Our manufacturing expertise naturally extends to a complete range of services designed to facilitate the research, implementation and operation of our solutions. Our teams of engineers have built their reputation on reassuring closeness, specialist expertise and a focus on customer needs.

Responsible growth

As a Group which is open to all cultures and firmly committed to human values, SOCOMEC promotes employee initiative and commitment. Working relationships are based on the idea of partnerships and respect for shared ethics. Through the company's commitment to achieving harmonious, lasting development, SOCOMEC fully embraces its responsibilities not only towards its shareholders, employees, customers and partners, but also towards society as a whole and its environment.

SOCOMEC has been a signatory to the Global Compact since 2003.

ENERGY SPECIALIST SINCE 1922

THE GLOBAL COMPACT WE SUPPORT

Four key applications: the know-how of a specialist

Critical Power

Ensuring the availability of high-quality power for critical applications.



Thanks to the company's wide range of continuously evolving products, solutions and services, SOCOMEC are experts in the three essential technologies that ensure the high availability of supply to critical facilities and buildings:

- uninterruptible power supplies (UPS) that provide high-quality power and reduce distortion and interruptions to the mains supply,
- changeover of high availability sources to transfer supply to an operational backup source,
- continuous monitoring of installation facilities to prevent failures and reduce operating losses.

Power Control & Safety

Managing power and protecting individuals and property.



A specialist manufacturer of electrical equipment since 1922, SOCOMEC is the undisputed leader in power switching and changeover solutions.
The company has always promoted the benefits of fuses for the safety of both individuals and equipment.
In addition, it has become a major player in cutting-edge technology such as the monitoring and detection of insulation defects.

SOCOMEC guarantees solutions and services which are both relevant and efficient.

Solar Power

Guaranteeing the safety and durability of photovoltaic (PV) facilities.



As experts in the solar energy equipment field, SOCOMEC has all the specialist know-how for implementing key strategic functions in PV facilities, including:

- safety, through specially designed load break switches that cut the DC current generated by solar panels regardless of the configuration of the installation and the operating conditions,
- ensuring the reliability of DC facilities thanks to solutions that prevent the degradation of insulation and electric arc failure in the DC current,
- control of very high-efficiency energy conversion, via PV inverters that transform all energy generated by the solar panels into power to be consumed locally or re-injected into the national grid.

Energy Efficiency

Improving building and facility energy efficiency.



SOCOMEC solutions, ranging from sensors to the wide choice of innovative, modular software packages, are driven by experts in energy efficiency. They meet the essential requirements of managers or operators of tertiary, industrial or local authority buildings, and make it possible to:

- measure power consumption, identify sources of excess consumption, and raise occupant awareness,
- limit reactive energy and prevent associated tariff penalties,
- use the best tariffs, check supplier invoicing and accurately distribute energy bills amongst consumer entities.

A cutting-edge laboratory

the backing of an expert

Since 1965, the Pierre Siat test laboratory has used its expertise to guarantee the reliability and compliance of SOCOMEC products and solutions. Our customers are also welcome…

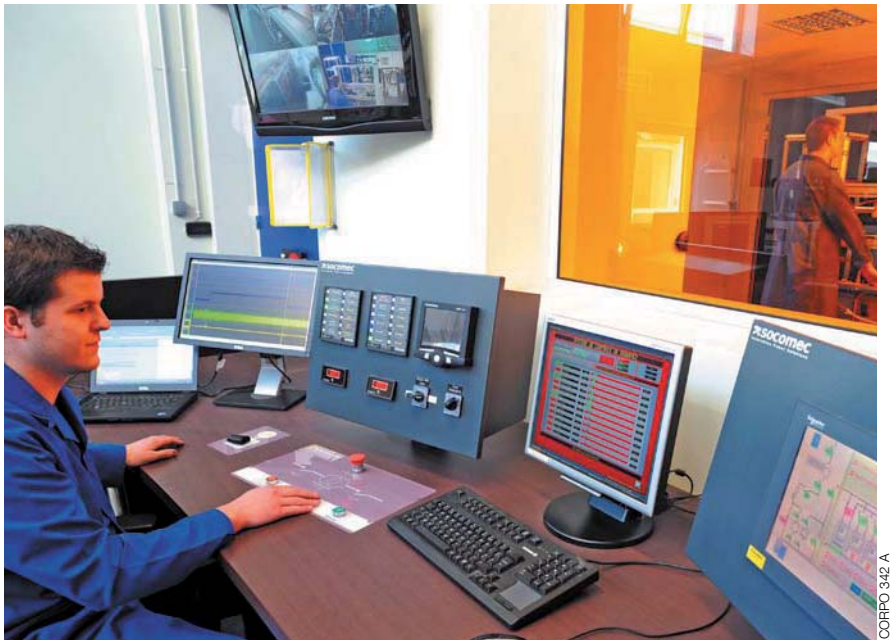

CORPO 342 A

A decisive link

Located at the Company's headquarters in Benfeld, France, the Pierre Siat test laboratory is one of SOCOMEC's main quality pillars: its contribution to the development, qualification and certification phases plays a decisive role in the process leading to the creation of a product or solution.

Global scale

This totally independent laboratory is recognised by the major certification bodies worldwide: A member of ASEFA(1) and LOVAG(2), it is accredited by COFRAC(3), UL (CTDP(4)), CSA (shared certification) and KEMA (SMT/WMT(5)). It also works in partnership with numerous international certification organisations(6). The quality and safety requirements specific to each country are therefore fully taken into account.

Specialist facilities

With its 100 MVA (Idc 100 kA rms 1 s) short-circuit platform, three 10 kA overload platforms and numerous other test instruments, in facilities covering 1500 m², the Pierre Siat laboratory is currently the 2nd largest French power laboratory. It combines expertise in electricity and mechanics, pneumatics and computing.

Ongoing commitment

To adapt to the increasingly demanding standards and ever more innovative and high-performance products, the Pierre Siat laboratory is constantly extending the scope of its tests, investing whenever necessary in new equipment.

A vast range of tests

The laboratory submits all SOCOMEC products and solutions (including those in enclosures) to numerous tests in the following fields:

- functional: component resistance and operating tests,
- dielectric: immunity to interference, dielectric insulation, overvoltage, overcurrent,
- mechanical: endurance and mechanical shocks, etc.
- Environment: functional or electrical tests under extreme conditions (temperatures, salt spray), vibrations, etc.),
- AC/DC endurance: in operation and under controlled temperatures (arcs, LV/HV outages, etc.),
- temperature rise,
- electromagnetic compatibility (EMC),
- metrology,
- safety: flammability, etc.

Conducted during the design and production phases, these tests guarantee the long-term reliability of the equipment sold.

Customised services

These test facilities and expertise are also available to our partners who require assistance with the qualification and certification of their products or equipment.



We issue certificates of conformity and performance declarations upon request.

For more information, visit our web site: www.socomec.fr/laboratoire-essais_fr.html

(1) Association des Stations d'Essais Françaises d'Appareils électriques basse tension (French association of low voltage electrical equipment test stations)
(2) Low Voltage Agreement Group
(3) Comité Français d'Accréditation (French accreditation body)
(4) Client test data programme
(5) Supervised Manufacturer's testing/Witnessed manufacturer's testing
(6) KEMA, CEBEC, UL, CSA, ASTA, Lloyd's Register of Shipping, Bureau Véritas, BBJ-SEP, EZU, GOST-R, etc.

socomec Innovative Power Solutions

A worldwide presence

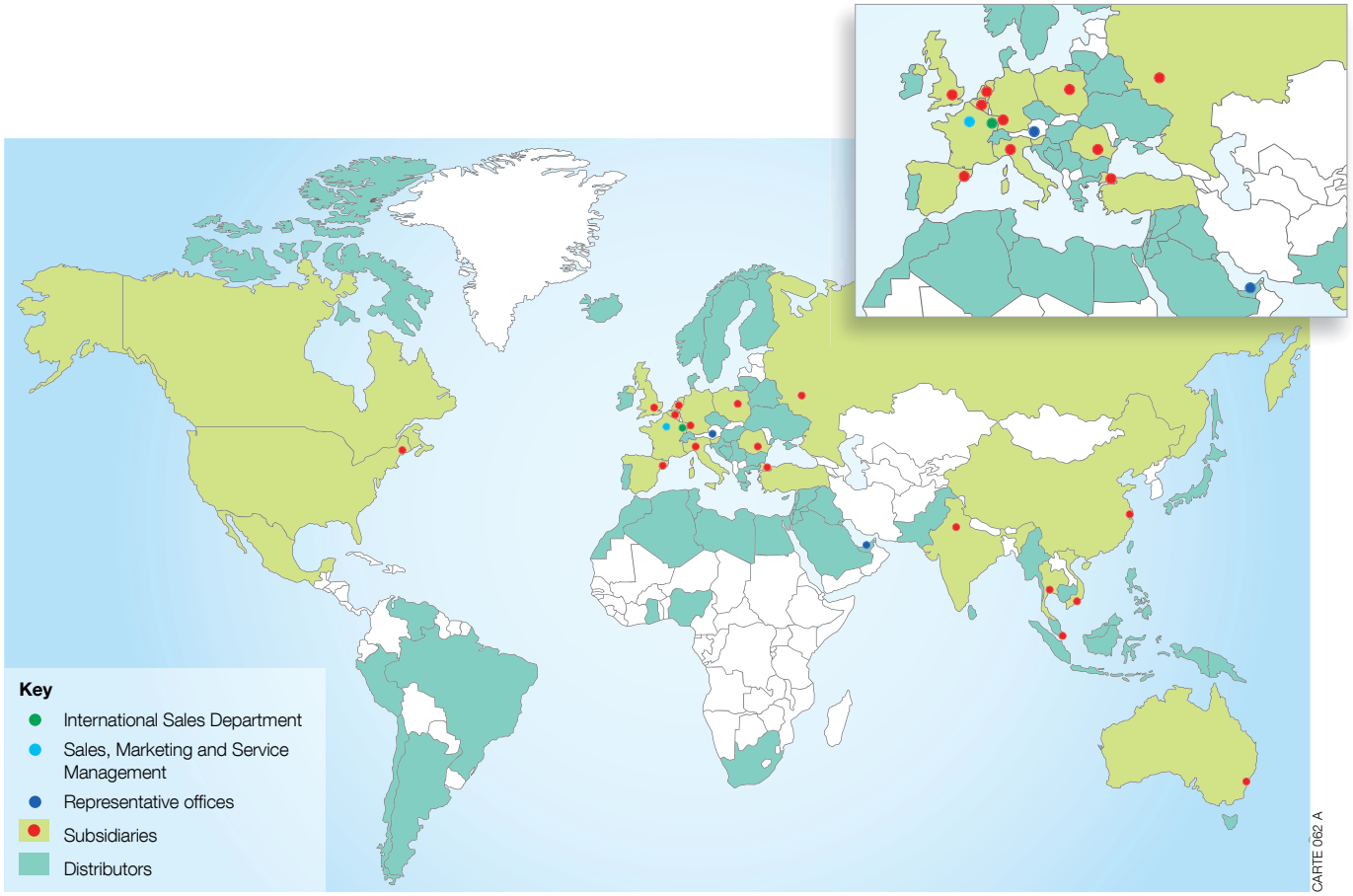

For your needs in Power Control & Safety and Energy Efficiency

Head office / International Sales Department

SOCOMEC
1, rue de Westhouse - B.P. 60010
F - 67235 Benfeld Cedex - France
info.scp.isd@socomec.com

Representative offices

Austria
info.scp.at@socomec.com

United Arab Emirates
info.scp.ae@socomec.com

Subsidiaries

Belgium - info.scp.be@socomec.com
France - info.scp.fr@socomec.com
Germany - info.scp.de@socomec.com
Italy - info.scp.it@socomec.com
North East Asia - info.scp.cn@socomec.com
Poland - info.scp.pl@socomec.com
Slovenia - info.scp.si@socomec.com
Spain - info.scp.es@socomec.com
South Asia - info.scp.in@socomec.com
South East Asia & Pacific - info.scp.sg@socomec.com
The Netherlands - info.scp.nl@socomec.com
The United Kingdom - info.scp.uk@socomec.com
Turkey - info.scp.tr@socomec.com
USA, Canada & Mexico - info.scp.us@socomec.com

For your needs in Critical Power and Solar Power

Sales, Marketing and Service Management

SOCOMEC Paris
95, rue Pierre Grange
F-94132 Fontenay-sous-Bois Cedex - France
dcm.ups.fr@socomec.com

Representative offices

United Arab Emirates
info.ups.ae@socomec.com

Subsidiaries

Australia - info.ups.au@socomec.com
Belgium - info.ups.be@socomec.com
China - info.ups.cn@socomec.com
France - dcm.ups.fr@socomec.com
Germany - info.ups.de@socomec.com
India - info.ups.in@socomec.com
Italy - info.ups.it@socomec.com
Malaysia - info.ups.my@socomec.com
Poland - info.ups.pl@socomec.com
Portugal - info.ups.pt@socomec.com
Romania - info.ups.ro@socomec.com
Russia - info.ups.ru@socomec.com
Singapore - info.ups.sg@socomec.com
Slovenia - info.ups.si@socomec.com
Spain - info.ups.sib@socomec.com
Thailand - info.ups.th@socomec.com
The Netherlands - info.ups.nl@socomec.com
The United Kingdom - info.ups.uk@socomec.com
Turkey - info.ups.tr@socomec.com
Vietnam - info.ups.vn@socomec.com
Other countries -
(Europe) info.ups.europe@socomec.com
(EMEA) info.ups.emea@socomec.com
(Latin America) info.ups.sib@socomec.com
(Asia Pacific) info.ups.apac@socomec.com



The benefits of the Energy Efficiency policy

Solutions that meet your requirements

Energy efficiency is not just about reducing energy bills. Our solutions offer you the ability to:

- Centralise your multi-utility energy measurement and monitoring.
- Significantly reduce your energy costs.
- Easily communicate internally and externally your environment oriented actions.
- Improve and ensure the energy efficiency of your installation.
- Increase the value of your property portfolio and assets thanks to the legislation compliance (EN 50001…).

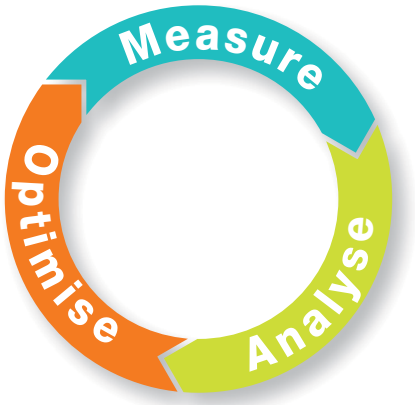

The three steps in the Energy Efficiency policy.

Solutions adapted to your activities

> Industry

automotive, aviation, food-processing, cement works



VERTE 031 A

Up to 10 % energy savings

- Receive alerts concerning abnormal operation.
- Prolong equipment operating life.
- Maximize energy output and avoid tariff penalties.
- Obtain energy performance indicators for preparing your annual report.

> Non critical buildings

schools, sport centres, offices, hotels



VERTE 108 A

Up to 30 % energy savings

- Edit and send automatic reports.
- Reduce and efficiently share your energy consumption.
- Increase occupant awareness of energy consumption habits.
- Facilitate the resale and renting of your building assets.
- Acquire energy labels.

socomec Innovative Power Solutions

An independent partner working closely with you



SITE 631 A

A comprehensive range

A complete and extensive range incorporating hardware, software and specialist services from one source.

A leader in Energy & Power Management

Measurement is the key link in managing an energy efficiency project. With the COUNTIS and DIRIS ranges, SOCOMEC has developed one of the most advanced multifunction measurement ranges on the market, dedicated to improving your energy performance.

High quality and high performance ranges

The DIRIS range is compliant with the latest IEC 61557-12 standard dedicated to multi-measurement devices (PMD*). The COUNTIS range complies with the requirements of the latest MID** directive (B+D module).

Enhanced skills and expertise in Energy Management Software development

Thanks to the VERTELIS team, having expertise in web based energy efficiency solutions with over 20 years of experience, SOCOMEC can now propose a global and high-performance offer.

The support of a partner

From the preliminary assessment of your installation required to properly analyse and use the data, to the software adaptation, the experts at SOCOMEC can support you in improving your energy efficiency objectives and to reach your goals.

** Performance Measuring and monitoring Devices.*
*** MID: Measuring Instruments Directive.*

> Critical buildings

hospitals, data centres, shopping centres, high-rise buildings



VERTE 033 A

Up to 30 % energy savings

- Display real-time values (digital or graphic formats).
- Identify abnormalities.
- Display energy targets and their results.
- Secure continuity of manufacturing processes.
- Define a performance reference system.
- Demonstrate respect for regulations currently in force / in the future.

> Infrastructures

transport, network operators, public distribution



SYDV 111 A

Up to 20 % energy savings

- Validate the network's capacity to accept supplementary loads.
- Choose the best tariff and check energy supplier bills.
- Obtain energy performance indicators for preparing your annual report.
- Improve the quality and energy output of your installation.



The benefits of working with a specialist

Contractors

Save time, reduce space and have peace of mind by choosing Socomec.

Compact devices: from single DIN 1 module meters to 96x96 multifunction measurement devices, our products are compact.

Robust terminals: we only use high quality cable lugs with appropriate tightening torques.

Guaranteed connections: protection against phase / neutral inversion and wiring errors detection, commissioning is faster and the equipment is guaranteed to operate correctly.

Intuitive ergonomics: Socomec products are designed to reduce the configuration time.

Reliable ranges: our ranges always respect the major international standards such as IEC 62053-21-22-23, IEC 61557-12 (PMD) and EN 50470-1-3 (MID).

Specifiers

The assurance of an adapted solution that conforms to the most stringent standards.

Solutions adapted to your requirements: our comprehensive offer helps you find the perfect product with the needed functions.

In addition:

- We help you to define the right system perfectly suited to your customer needs.
- As a specialist manufacturer we are able to adapt our devices to your specific needs.

Products compliant with major standards:

- All DIRIS devices comply with the requirements of the IEC 61557-12. This guarantees a high level of performance in metrological, mechanical and environmental terms.
- All COUNTIS comply with the requirements of the MID directive B+D module (EN 50470-1, EN 50470-3 ensuring measurement accuracy and products are tamper-proof.

Adapted services

We offer a range of services to help you identify and meet your energy performance objectives:

- assessment and sizing,
- commissioning,
- software adaptation and customisation,
- customised maintenance,
- end-of-life product replacement,
- customised training.

Contact your agency for further information.







A complete range of products to suit your requirements

Our offer, comprising **products, software and services** are perfectly suited to LV electrical installations, but also are an ideal solution for HV facilities thanks to the DIRIS A and DIRIS N measuring units.
In addition, the flexibility of our products and their extensive ranges enable contractors and users to choose the right product for each type of network (single, three-phase, etc.) and the load to be measured.

Take advantage of a complete manufacturer's offer that is flexible and multi-utility compatible, and one that provides:

- **cost-effective products:** COUNTIS E energy meters with direct connection up to 100 A, COUNTIS ECi multi-utility pulse collector (electricity, water, gas, analogue values, etc.),
- **advanced products:** DIRIS A multifunction measuring units and DIRIS N network analysers,
- **indispensible range accessories:** current transformers, measurement indicators, communication interfaces, etc.

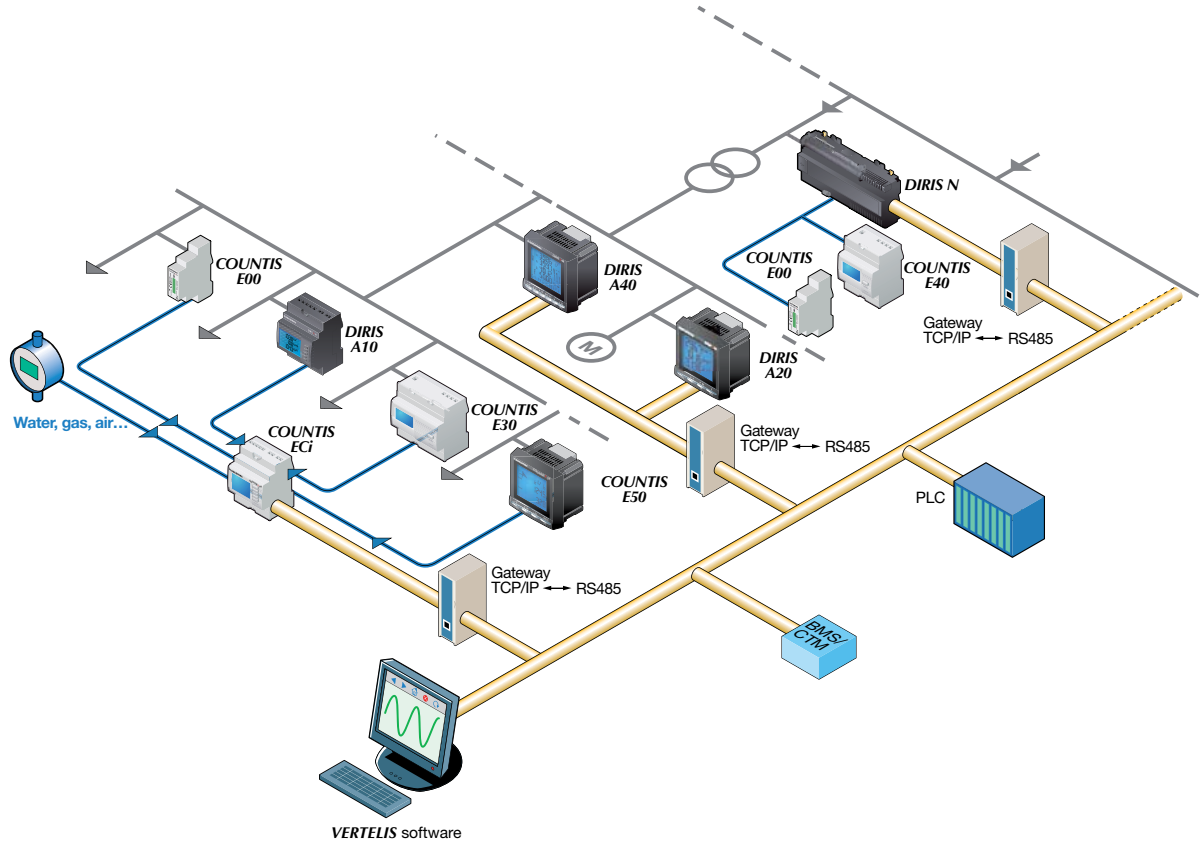

mesur_112_c_fr_cat

Selection guide

A specific solution to implement each step in your Energy Efficiency policy.

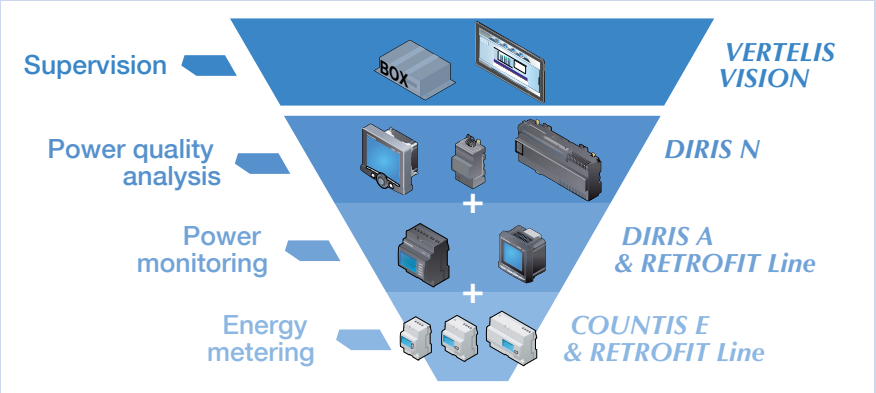

DIRIS 687 C



Selection guide

Active energy meters and pulse concentrators

COUNTIS E

Which type of network? ▶ Which load current?

Network - Input current	**Single-phase Direct up to 32 A**	**Single-phase Direct up to 63 A**	**Single-phase Direct up to 63 A**	**Three-phase Direct up to 63 A**	**Three-phase Direct up to 63 A**	**Three-phase Direct up to 100 A**	**Three-phase Direct up to 100 A**
							
Active energy meters: *COUNTIS E*	***E00/E02*** p. 20	***E10*** p. 22	***E11/E12*** p. 22	***E20*** p. 24	***E21*** p. 24	***E30*** p. 26	***E31/E32*** p. 26
Main specifications							
MID: EN 50470 module B + D certification	• (E02)		• (E12)				• (E32)
RS485 MODBUS							
RS485 M-BUS							
Case size	1 module	3 modules	3 modules	4 modules	4 modules	7 modules	7 modules
Input voltage	230 … 400 VAC	230 … 400 VAC	230 … 400 VAC	230 … 400 VAC	230 … 400 VAC	230 … 400 VAC	230 … 400 VAC
Functions							
Total/partial energy kWh	• / -	• / •	• / (E11)	• / •	• / •	• / •	• / (E31)
Active power / Reactive power		• / -	• / -	• / -	• / -	• / -	• / -
Dual tariff for kWh			•		•		•
Total/partial energy kvarh							
kVA							
Load curve							
Measurement (I, V, P, Q, S, F and PF)							
CT connection indication							
Bidirectional (energy consumption and production)							
Accuracy							
Active energy (IEC 62053-21)	class 1	class 1	class 1	class 1	class 1	class 1	class 1
Reactive energy (IEC 62053-23 class 2)							
Active energy (EN 50470)	class B (E02)		class B (E12)				class B (E32)
Characteristics							
Metrological LED		•	•	•	•	•	•
Pulse output	100 Wh	100 Wh	100 Wh	100 Wh	100 Wh	100 Wh	100 Wh
Sealing cover (MID version only)	• (E02)		• (E12)				• (E32)
Phase/neutral inversion protection		•	•	•	•	•	•

		
Pulse concentrator	***COUNTIS ECi2*** p. 34	***COUNTIS ECi3*** p. 34
Case	**4 modules**	**4 modules**
Logical inputs	**7**	**7**
Analogue inputs		**2**
ON/OFF output (alarm)	1	1
Partial, total, daily, weekly or monthly kWh or other types of data (liters, m^3…)	•	•
Load curve from 8 to 30 minutes	•	•
RS485 MODBUS	•	•

socomec Innovative Power Solutions

Which accuracy? → MID certification? → Communication or pulse output?

	Three-phase Direct up to 100 A	Three-phase Direct up to 100 A	3 x single-phase Direct up to 100 A	Three-phase CT/5 A	Three-phase CT/5 A	Three-phase CT/5 A	Three-phase CT/5 A	Three-phase CT/5 A	Three-phase CT/5 A
									
	E33/E34 *p. 26*	***E35/E36*** *p. 26*	***E63*** *p. 32*	***E40*** *p. 28*	***E41/E42*** *p. 28*	***E43/E44*** *p. 28*	***E45/E46*** *p. 28*	***E50*** *p. 30*	***E53*** *p. 30*
	• (E34)	• (E36)			• (E42)	• (E44)	• (E46)		
	•		•			•			•
		•					•		
	7 modules	7 modules	7 modules	4 modules	4 modules	4 modules	4 modules	96x96	96x96
	230 … 400 VAC	230 … 400 VAC	230 … 400 VAC	230 … 400 VAC	230 … 400 VAC	230 … 400 VAC	230 … 400 VAC	100 … 400 VAC 125 … 350 VDC	100 … 400 VAC 125 … 350 VDC
	• / • (E34 via COM)	• / • (E36 via COM)	• / •	• / •	• / •	• / via COM (E44)	• / via COM (E46)	• / •	• / •
	• / via COM	• / via COM	• / -	• / -	• / -	• / via COM	• / via COM	• / •	• / •
	up to 4 via COM	up to 4 via COM	up to 4 via COM		•	up to 4 via COM	up to 4 via COM	•	•
	via COM	via COM	via COM	• / •	• /(E41)	via COM	via COM	•	•
	via COM	via COM	via COM			via COM	via COM	•	•
	via COM	via COM	via COM			via COM	via COM		
	via COM	via COM	via COM			via COM	via COM	•	•
				•	•	•	•	•	•
	• (E33)	• (E35)				• (E43)	• (E45)		
	class 1	class 1	class 1	class 1	class 1	class 1	class 1	class 1	class 1
				class 2	class 2	class 2	class 2	class 2	class 2
	class B (E34)	class B (E36)			class C (E42)	class C (E44)	class C (E46)		
	•	•	•	•	•	•		•	
			100 Wh	configurable	configurable				
	• (E34)	• (E36)			• (E42)	• (E44)	• (E46)		
	•	•	•	•	•	•	•	•	•

COUNTIS ECi pulse concentrator

Enables pulses from water, gas, compressed air, electricity meters or even analogue sensors (light, temperature, wind etc.) to be registered and stored. All data can be centralised and managed by an energy efficiency software via RS485 communication.

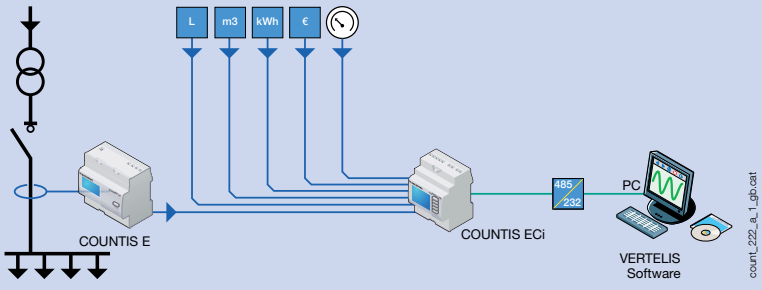



Selection Guide

Multifunction meters

DIRIS

Which application? ▶ Which functions?

Applications	Multifunction metering (MFM)		
		new 	
	DIRIS A10 *p. 44*	***DIRIS A17*** *p. 48*	***DIRIS A20*** *p. 52*
Multi-measurement			
Currents, voltages (ph / ph and ph / n), active / reactive / apparent powers, power factor, frequency	•	•	•
4th CT for neutral current measurement			
Voltage/current unbalance			
Currents, voltages, frequency (average values)	(currents)	(currents)	(currents)
Max. power demand	•	•	•
Temperatures	Internal		
Tangent phi			
Hour meter	•		•
Memorisation of min / max instantaneous values			
Metering			
kWh (+/-), kvarh (+/-), kVAh	kWh (+), kvarh (+)	•	kWh (+), kvarh (+)
Logical input(s) for pulse meter(s)		1 as standard	
Analogue input(s) for sensors			
Multi-tariff meters	•		
Pulse output(s)	1 as standard	1 as standard	1 with optional module
Active energy accuracy / IEC 62053-22 class 1 s		•	
Active energy accuracy / IEC 62053-22 class 0.5 s	•		•
Active energy accuracy / IEC 62053-22 class 0.2 s			
Reactive energy accuracy / IEC 62053-23 class 2	•		•
Power management			
Load curves (period 5, 8, 10, 15, 20 and 30 minutes)			
Predictive power			
Power quality			
THD voltages, currents and neutral currents	Row 51	Row 31 (for 1 reference)	Row 51
Individual harmonics			
Interharmonics			
Vector diagram			
Flicker			
EN 50160			
Sag, swell and outages, overcurrent			
RMS 1/2 period curve backup			
Plug-in modules			
	As standard: • 1 input for tariff selection/ remote device status • 1 programmable output for pulse report, alarm report or remote device command • RS485 JBUS/MODBUS (for 1 reference)	As standard: • 1 logical input for pulse metering or remote device status • 1 programmable output for pulse report, alarm report or remote device command • RS485 JBUS/MODBUS (for 2 references)	• 1 programmable output for pulse report, alarm report or remote device command • RS485 JBUS/MODBUS communication

socomec Innovative Power Solutions

Which dimensions? → Which communication protocol? → Which options?

	Power monitoring (PMD)		Power monitoring & events analysis (PMD)	Power monitoring & residual current monitoring (PMD+RCM)	Power quality & network analysis (PQA)
					
	DIRIS A40 p. 56	***DIRIS A41*** p. 56	***DIRIS A60*** p. 62	***DIRIS A80*** p. 68	***DIRIS N*** p. 76
	•	•	•	•	•
		•		•	•
			•	•	•
	•	•	•	•	•
	•	•	•	•	•
	by temperature sensor	by temperature sensor	by temperature sensor		internal + by temperature sensor
			•	•	
	•	•	•	•	•
	optional	optional	•	•	•
	2 inputs / 2 outputs module (maximum 3)	•	•	•	•
	up to 6 with optional modules	up to 6 with optional modules	up to 6 with optional modules		optional
					optional
	•	•	•	•	•
	2 with optional module	2 with optional module	2 with optional module		optional
	•	•	•	•	
					•
	•	•	•	•	•
	with optional memory module	with optional memory module	•	•	•
	•	•	•	•	•
	Row 63	Row 63	Row 63	Row 63	Row 51
	Row 63	Row 63	Row 63	Row 63	Row 51
					•
					•
					•
			•	•	•
			•	•	•
			•	•	•
	• 2 pulse outputs • RS485 JBUS/MODBUS communication • PROFIBUS DP communication • Ethernet communication (available with RS485 JBUS/MODBUS gateway). • 2 analogue outputs • 2 inputs / 2 outputs • Memory • Temperature inputs		• Memory fitted as standard • 2 pulse outputs • RS485 JBUS/MODBUS communication • Ethernet communication (available with RS485 JBUS/MODBUS gateway). • 2 analogue outputs • 2 inputs / 2 outputs • Temperature inputs	• RS485 JBUS/MODBUS communication • Ethernet communication (available with RS485 JBUS/MODBUS gateway).	• 4 digital inputs / 2 digital outputs • 2 analogue inputs • 2 analogue outputs



Selection Guide

Single & Multi-Meters

MULTIS

Which application ? ▶ Which functions

Network - Current input	Ammeter		Voltmeter	
				
	MULTIS I10 ***with CT TCA15**** p. 42	***MULTIS I11*** p. 42	***MULTIS V10*** p. 42	
Measurements				
I	•	•		
U			•	
F				
V				
P, Q, S, Ea, Er, Cos φ				
AC network	LV single phase	LV single phase	LV single phase	
Measurement range (between phase and neutral)	0.07 … 200 A	0.05…5.5 A 5…10000 A / 5 A	10 … 600 VAC	
Measurement range between phases				
Accuracy	1 % ± 1 digit	1 % ± 1 digit	1 % ± 1 digit	
MIN / MAX / AVG (VLN - VLL - A - W - VAr - VA - SW - SVAr - SVA				
MAX Demond				
Communication				
Type	-	-	-	
Pulse output				
Number			-	
Weight	-	-	-	
Input				
Number				
Auxiliary power supply				
Voltage	190 … 260 VAC	190 … 260 VAC	190 … 260 VAC	
Frequency	45 … 65 Hz	45 … 65 Hz	45 … 65 Hz	
Consumption	< 4 VA	< 4 VA	< 4 VA	
Case				
Type	panel mounting	panel mounting	panel mounting	
Dimensions (H x W x D)	72 x 72 x 87	72 x 72 x 87	72 x 72 x 87	
Panel cut out dimensions (H x W)	67 x 67	67 x 67	67 x 67	
Front protection rating	IP40	IP40	IP40	
Operating conditions				
Operating temperature	- 5 … +50°C	- 5 … +50°C	- 5 … +50°C	

Compact Range for application where power quality and availibility is a key issue

User friendly
Simple to use and to configure with only one scroll down menu.

Complete product line
Socomec offers a wide range of single and three phase Multi-Meter for HV-LV network.

Positive security
Password protected (L40).

Easy to read
- Values displayed by an Red LED technology.
- High efficient reading in dark environment or glazed doors.

** CT TCA15 included with this product.*

socomec Innovative Power Solutions

Which dimensions ?

Communication or pulse output ?

	Frequency meter	Ammeter	Voltmeter	Multi-meter	
					
	MULTIS F10 p. 42	***MULTIS I30*** p. 40	***MULTIS V30*** p. 40	***MULTIS L20*** p. 36	***MULTIS L40*** p. 36
		•		•	•
			•	•	•
	•			•	•
			•	•	•
					•
	LV single phase	LV three phase + neutral	LV single phase	LV or HV three phase + neutral	LV or HV three phase + neutral
	20 … 400 Hz	0.05 … 5.5 A 5 … 10000 A / 5 A	10 … 300 VAC	0.05 … 5.5 A 5/5 A … 10000/5 A 1/1 A … 2000/1 A 10 … 300 VAC / 10 V … 200 kVAC	0.05 … 5.5 A 5/5 A … 10000/5 A 1/1A…2000/1A 10 … 300 VAC / 10 V … 200 kVAC
			10…500 VAC	10…500 VAC	10…500 VAC
	1 % ± 1 digit	1 % ± 1 digit	1 % ± 1 digit	1 % ± 1 digit	1 % ± 1 digit
				•	•
				•	•
	-	-	-	-	MODBUS RTU via RS485
	-	-	-	-	2
	-	-	-	-	1 Wh…1 MWh / 1 VArh…1 MVArh
					2
	190 … 260 VAC	190 … 260 VAC	190 … 260 VAC	190 … 260 VAC	190 … 260 VAC
	45 … 65 Hz	45 … 65 Hz	45 … 65 Hz	45 … 65 Hz	45 … 65 Hz
	< 4 VA	< 4 VA	< 4 VA	< 4 VA	< 4 VA
	panel mounting	panel mounting	panel mounting	panel mounting	panel mounting
	72 x 72 x 87	96 x 96 x 82	96 x 96 x 82	96 x 96 x 82	96 x 96 x 82
	67 x 67	91 x 91	91 x 91	91 x 91	91 x 91
	IP40	IP40	IP40	IP40	IP40
	- 5 … +50°C	- 5 … +50°C	- 5 … +50°C	- 5 … +50°C	- 5 … +50°C

Auto scaling
Automatic scaling in kilo and Mega.

Socomec design
- Innovative design in the same line as the DIRIS A range.
- It give a high quality impact on the panels.

Versatile range
- 1 A - 5 A secondary current.
- HV-LV network.
- 72 x 72 - 96 x 96 frame.
- 50 Hz-60 Hz frequency.



Selection Guide

Current transformers

Type	TRB 60	TRB 70	TRB 135	TCA 14	TCA 21	TCA 22	TCB 17-20	TCB 26-30	TCB 28-30	TCB 26-40	TCB 32-40	TCB 44-50
Range	Primary wound			Cable-through			Bar or cable-through					
Class	0.5	0.5	0.5	1	0.5/1	1	1	0.5/1	0.5/1	1	0.5/1	0.5/1
0.2S version			(1)			(2)		T2CB 26-30			T2CB 32-40	
	p. 99			p. 101			p. 102 - 103					

Rating (A)

0.5												
5	5 to 20	5 to 40										
10												
15												
20												
25			25 to 150									
30												
40				40 to 150								
50												
60					60 to 300		60 to 400					
75											75 to 1000	
80									80 to 500			
100						100 to 600		50 to 750		100 to 750		
125												
150			* 25 to 150			* 150 to 600		* 150 to 750				150 to 1250
160												
200											* 200 to 750	
250												
300												
400												
500												
600												
750												
800												
1000												
1200												
1250												
1500												
1600												
2000												
2500												
3000												
4000												
5000												

Dimensions

Height	75.5	85.5	85	65	65	65	65	61	70	75.5	88.5	98.5
Width	61	71	135	45	45	49.5	49.5	75.5	49.9	61	71	86
Depth	35	45	60	30	30	35	50	48	68	48	58	58
Cable (Ø mm)				14	21	22.5	17.5	26	28	26	32	44
Bar 1							20x5	30x10	30x10	32x18	40x10	50x12
Bar 2								20x10 (x2)		40x12	20x10 (x2)	40x10 (x2)
Bar 3												

** Class 1.*

(1) Please see T2RB 115 for a primary wound 0.2S version. Dimensions are different from TRB 135.

(2) Please see T2CA 225 for a cable-through 0.2S version. Dimensions are different from TCA 22.

socomec Innovative Power Solutions

	TCB 44-63	TCB 55-80	TCD 85-100	TCB 100-125	TBA 60	TBA 80	TBA 100	TBA 103	TBA 127	TO 23	TO 58	TO 812	TO 816
	Bar or cable-through				Bar-through					Split-core			
	0.5	0.5	0.5	0.5	0.5/1	0.5	0.5	0.5	0.5	1/3	0.5/1	0.5/1	0.5
	T2CB 44-63						T2BA 100	T2BA 103	T2BA 127				
	p. 103				p. 106					p. 110			
	105.5	123.5	184.8	184.8	129	117	167	150	175	106	158	198	243
	96	120	172	172	88	96	129	99	100	93	125	155	195
	58	58	52	52	48	68	78	58	55	58	58	58	79
	44	55	85	100									
	63x10	80x10	100x10	123x30	60x30	84x34	100x55	103x41	128x38	33x23	85x55	125x85	165x85
	50x10 (x2)	60x30	80x10 (x3)	100x10 (x3)									
		60x10 (x2)											

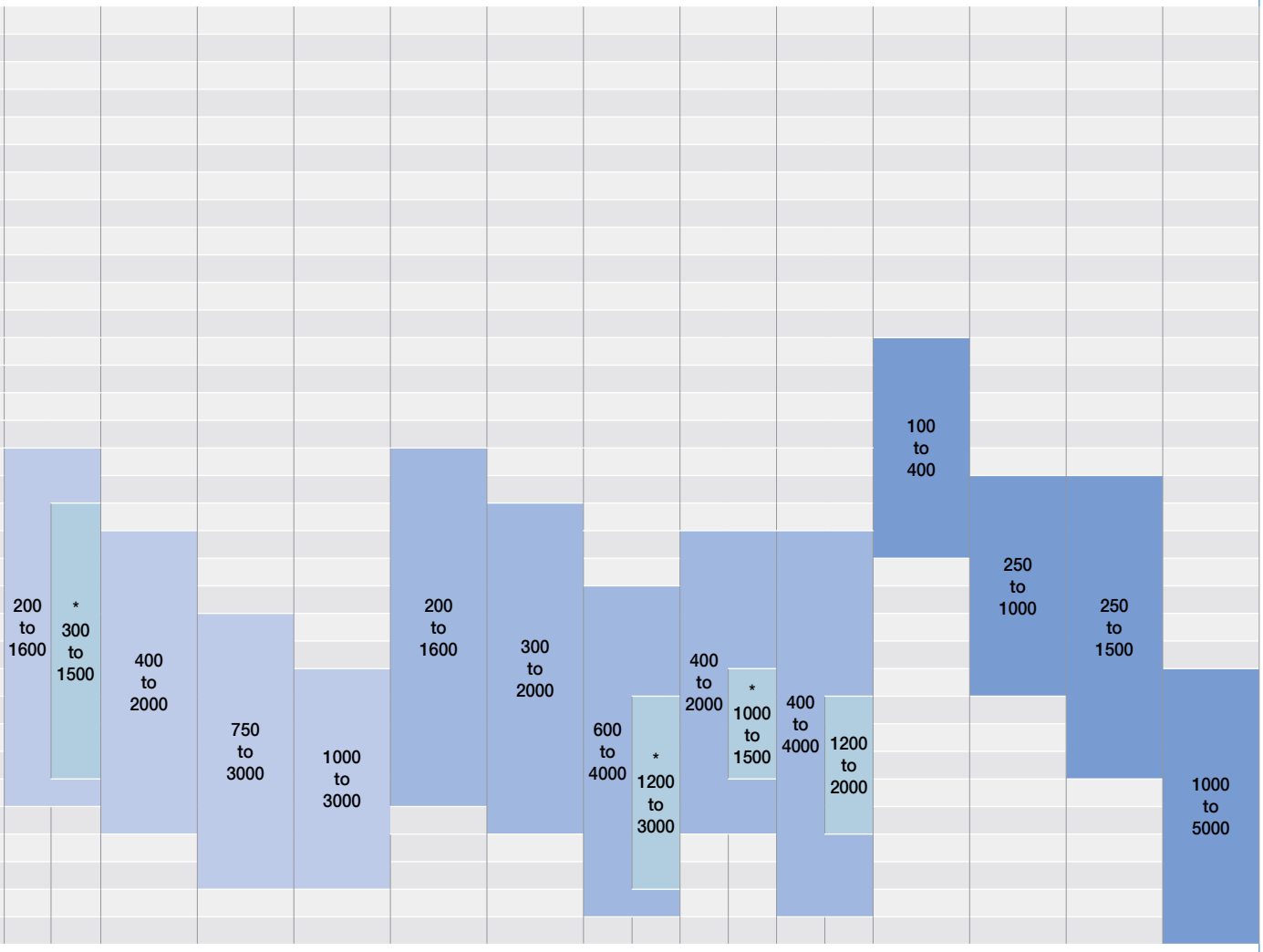



COUNTIS E0x

Active energy meters

single-phase - direct 32 A



count_215_a_1

COUNTIS E02 - MID



count_244_a_1_cat

COUNTIS E04

The solution for

- Camping sites.
- Marinas.
- Shopping centres.
- Data centres.



Strong points

- Compact.
- Pulse output.
- MID certified B+D module.
- RS485 communication (MODBUS)

MID certification

- COUNTIS E comply with the MID directive, guaranteeing accuracy and reliability when metering, an indispensable function for energy billing applications.
- COUNTIS E MID feature tamper-proof components to prevent fraud.

Conformity to standards

- IEC 62053-21 class 1
- IEC 62053-31
- IEC 62052-11
- EN 50470-1
- EN 50470-3

Function

The **COUNTIS E0x** is a modular active electrical energy meter displaying the total energy consumed (kWh) directly on its LCD display. It is designed for single-phase load metering and is used for direct connections of up to 32 A. The COUNTIS E02 and E04 has MID certification.

Advantages

Compact

The COUNTIS E0x is only 1 module wide.

Pulse output

The pulse output enables the kWh consumption to be reported to a remote system (PC/BMS) so that it can be analysed for billing, energy saving or energy cost management purposes.

MID certified B+D module

COUNTIS E products with MID certification provide the guaranteed accuracy required for applications in which sub-billing of the electrical energy consumed is necessary. “Module B+D” certification guarantees that the design and manufacturing process of products are approved by an accredited laboratory.

Principle diagram

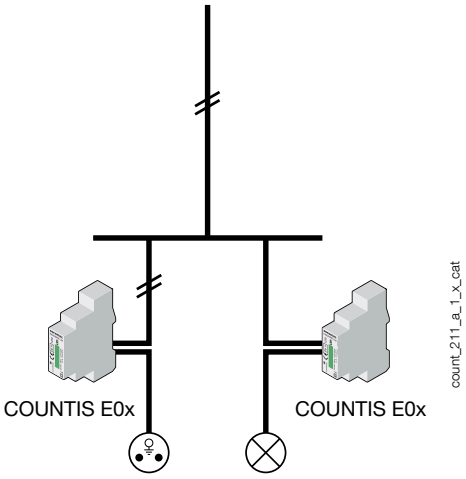

count_211_a_1_x_cat

Common characteristics

- Compact design.
- Measurement accuracy: 1 %.
- LCD display.

Models	Key functions
E00	Pulse output
E02	MID (Reset impossible) + Pulse output
E03	MODBUS RS485 communication
E04	MODBUS RS485 communication + MID (Reset impossible)

socomec Innovative Power Solutions

Front panel

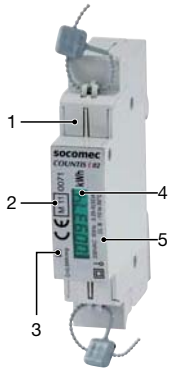

count_215x_a_2_cat

1. Terminal shrouds (COUNTIS E02 + E04).
2. MID Marking (COUNTIS E02 + E04).
3. Metrological LED (2000 pulses/kWh for E00/E02 and 1000 pulses/kWh for E03/E04)
4. kWh display.
5. Serial number (COUNTIS E02).

Electrical characteristics

Current measurement (TRMS)	
Type	single-phase - direct 32 A
Input consumption	< 2 VA
Permanent overload	32 A
Intermittent overload	30 I_{max} for 10 ms
Minimum current measured	20 mA
Voltage measurements (TRMS)	
Range of measurement	196 … 264 VAC
Input consumption	8 VA
Permanent overload	264 VAC
Energy accuracy	
Active (according to IEC 62053-21)	Class 1
Active (according to EN 50470)	Class B
Power supply	
Self-supplied	yes

Output (pulsed)	**COUNTIS E00/E02**
Number	1
Type of optocoupler	15 VDC max
Fixed pulse weight	100 Wh
Pulse duration	100 ms
Operating conditions	
Operating temperature	- 10 … + 55 °C
Storage temperature	- 20 … + 70 °C
Relative humidity	95 %
Communication	**COUNTIS E03/E04**
Link	RS485
Type	2 … 3 half duplex wires
Protocol	MODBUS® RTU
MODBUS speed	1200 … 38400 bauds

Case

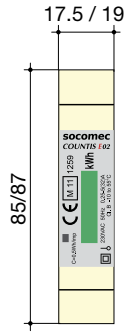

count_212_b_x_cat

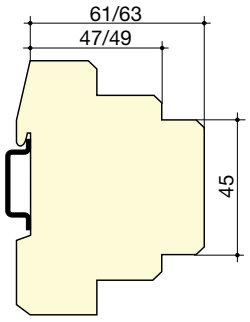

	COUNTIS E00/E02	**COUNTIS E03/E04**
Type	modular	modular
Number of modules	1	1
Dimensions W x H x D	17.5 x 85 x 61	19 x 87 x 63
Case degree of protection	IP 20	IP 20
Front degree of protection	IP 50	IP 50
Display type	LCD 5+1 digits	LCD 6+1 digits
Rigid cable cross-section	10 mm²	6 mm²
Flexible cable cross-section	6 mm²	4 mm²
Weight	150 g	150 g

Connection

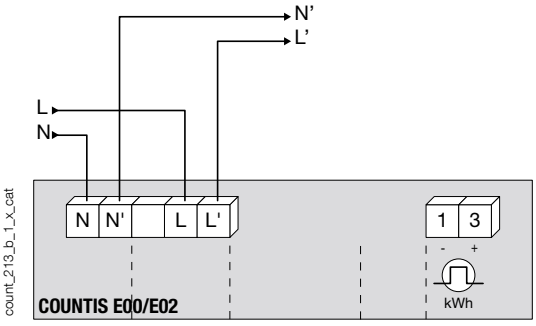

count_213_b_1_x_cat

N - L: network input.
N' - L': network output.
1 - 3: output (pulsed).

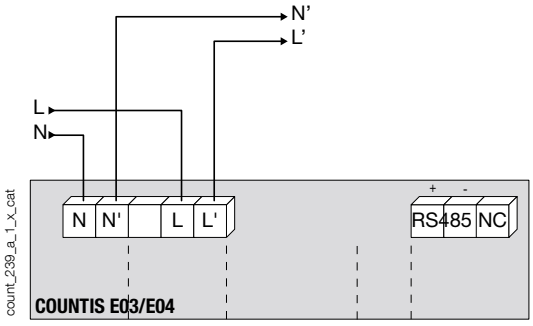

count_239_a_1_x_cat

References

Type	**COUNTIS E00 Reference**	**COUNTIS E02 Reference**	**COUNTIS E03 Reference**	**COUNTIS E04 Reference**
Direct 32 A	4850 **3019**			
Direct 32 A - MID		4850 **3020**		
Direct 32 A - with MODBUS communication via RS485			4850 **3029**	
Direct 32 A - with MODBUS communication via RS485 - MID				4850 **3030**



COUNTIS E1x

Active energy meters

single-phase - direct 63/80 A



count_216_a_1_cat

COUNTIS E12 - *MID*



count_246_a_1_cat

COUNTIS E13

Function

The **COUNTIS E1x** is a modular active electrical energy meter displaying the energy and power consumed (kWh and kW) directly on its backlit LCD display. It is designed for single-phase load metering and is used for direct connections of up to 63 or 80 A depending on the modele).
COUNTIS E12, E14 and E16 have MID certification.

Common characteristics

- Measurement accuracy: 1 %
- Backlit LCD display (only E10/E11/E12).

Principle diagram

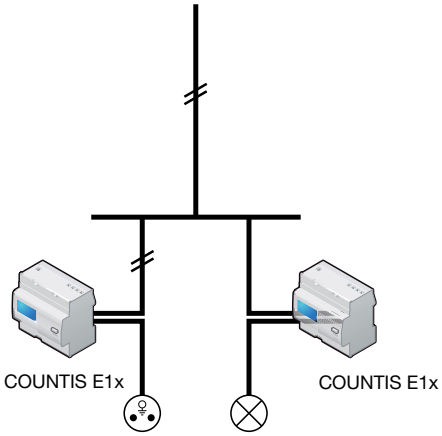

Advantages

RS485 communication (MODBUS or M-BUS) or pulse output

To enable the remote reporting of energy consumption, COUNTIS E1x are provided with either a pulse output or an RS485 communication output, with MODBUS or M-BUS protocol. In addition to their reporting functions, COUNTIS E1x with RS485 can be configured remotely and enable access to multi-measurement values.

Dual-tariff metering

Two tariffs are available and can be easily accessed through the meter's display. Each tariff can be utilised to assign energy metering to different time slots (high and low demand hours) or different sources (normal/backup).

MID certified B+D module

COUNTIS E products with MID certification provide the guaranteed accuracy required for applications in which sub-billing of the electrical energy consumed is necessary. "Module B+D" certification guarantees that the design and manufacturing process of products are approved by an accredited laboratory.

Models	Key functions
E10	Pulse output
E11	Dual tariff (2 partial counters) + Pulse output
E12	Dual tariff + MID (Reset impossible) + Pulse output
E13	MODBUS RS485 communication
E14	MODBUS RS485 communication + MID (Reset impossible)
E15	M-BUS communication
E16	M-BUS communication + MID (Reset impossible)

The solution for

- Marinas.
- Shopping centres.
- Data centres.



Strong points

- RS485 communication (MODBUS or M-BUS) or pulse output.
- Dual-tariff metering.
- MID certified B+D module.

MID certification

- COUNTIS E comply with the MID directive, guaranteeing accuracy and reliability when metering, an indispensable function for energy billing applications.
- COUNTIS E MID feature tamper-proof components to prevent fraud.

Conformity to standards

- IEC 62053-21 class 1
- IEC 62053-31
- IEC 62052-11
- EN 50470-1
- EN 50470-3

socomec Innovative Power Solutions

Front panel

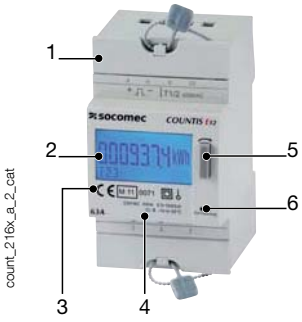

1. Terminal shrouds (COUNTIS E12).
2. Backlit LCD display.
3. MID Marking (COUNTIS E12).
4. Serial number (COUNTIS E12).
5. Navigation key.
6. Metrological LED (1000 pulses/kWh).

Electrical characteristics

Current measurement	**COUNTIS E10…E12**	**COUNTIS E13…E16**
Type	single-phase direct 63 A	single-phase direct 80 A
Input consumption	0.8 VA max.	0.8 VA max.
Startup current (I_{st})	40 mA	20 mA
Minimum current (I_{min})	0.5 A(1)	0.25 A
Transition current (I_{tr})	1 A(2)	0.5 A
Reference current (I_{ref})	10 A(3)	5 A
Permanent overload (I_{max})	63 A	80 A
Intermittent overload	1890 A max for 10 ms	2400 A max for 10 ms
Voltage measurement		
Range of measurement	230 +/- 20 %	230 +/- 20 %
Consumption (VA)	0.5 VA max.	0.5 VA max.
Permanent overload	280 V phase-neutral	300 V phase-neutral
Energy accuracy		
Active (according to IEC 62053-21)	Class 1	Class 1
Power supply		
Self-supplied	yes	
Frequency	50/60 Hz	

Output (pulsed)	**COUNTIS E10/E11/E12**	
Type of optocoupler	IEC 62053-31 Class A (20 ... 30 VDC)	
Number	1	
Fixed pulse weight	100 Wh	
Pulse duration	100 ms	
Operating conditions	**COUNTIS E10…E12**	**COUNTIS E13…E16**
Operating temperature	-10 to 55 °C	-25 to 55 °C
Storage temperature	-20 to 70 °C	-25 to 70 °C
Relative humidity	85 %	85%
Communication	**COUNTIS E13/E14/E15/E16**	
Link	RS485	
Type	2 … 3 half duplex wires	
Protocol	MODBUS® RTU	
MODBUS speed	4800 … 38400 bauds	
M-BUS speed	300 … 9600 bauds	

(1) $I_{(min)} \leq 0.5 * Itr$
(2) The accuracy class is guaranteed between I_{tr} and I_{max}.
*(3) $I_{(ref)} = I_{(b)}$ (base current) = 10 * $I_{(tr)}$ for direct connection COUNTIS.*

Case

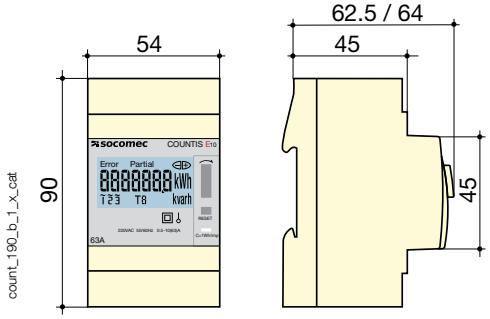

	COUNTIS E10…E12	**COUNTIS E13…E16**
Type	modular	modular
Number of modules	3	3
Dimensions W x H x D	54 x 90 x 62.5 mm	54 x 90 x 64 mm
Case degree of protection	IP 20	IP 20
Front degree of protection	IP 51	IP 51
Display type	LCD display	LCD display
Rigid cable cross-section	1.5 to 16 mm²	1.5 to 50 mm²
Flexible cable cross-section	1 to 16 mm²	1.5 to 50 mm²
Weight	170 g	170 g

Connection

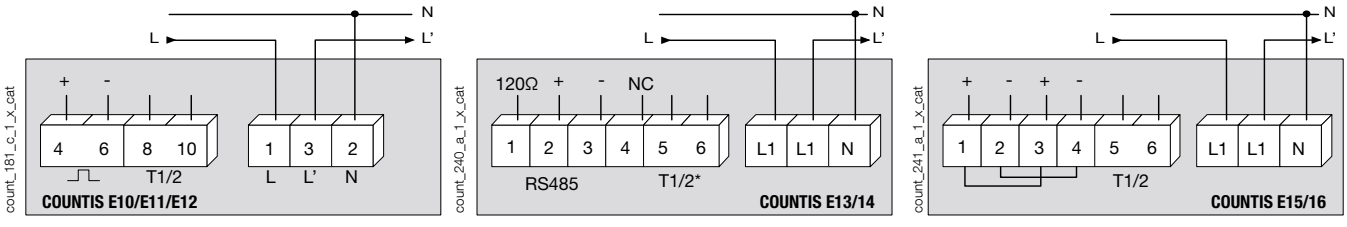

** Not available on COUNTIS E13*

References

Type	**COUNTIS E10 Reference**	**COUNTIS E11 Reference**	**COUNTIS E12 Reference**	**COUNTIS E13 Reference**	**COUNTIS E14 Reference**	**COUNTIS E15 Reference**	**COUNTIS E16 Reference**
direct 63 A	4850 **3000**						
direct 63 A - Dual tariff		4850 **3001**					
direct 63 A - Dual tariff and MID			4850 **3002**				
direct 80 A - with MODBUS communication via RS 485				4850 **3031**			
direct 80 A - with MODBUS communication via RS 485 - MID					4850 **3032**		
direct 80 A - wih M-BUS communication						4850 **3033**	
direct 80 A - with M-BUS comminucation - MID							4850 **3034**



COUNTIS E2x

Active energy meters

three-phase - direct 63 A



COUNTIS E20



COUNTIS E23

Function

The **COUNTIS E2x** is a modular active electrical energy meter displaying the energy and power consumed (kWh and kW) directly on its backlit LCD display. It is designed for three-phase load metering and is used for direct connections of up to 63 A.

Common characteristics

- Measurement accuracy: 1 %
- Backlit LCD display (only E20/E21)
- Detects connection errors

Advantages

RS485 communication (MODBUS or M-BUS) or pulse output

To enable the remote reporting of energy consumption, COUNTIS E2x are provided with either a pulse output or an RS485 communication output, with MODBUS or M-BUS protocol. In addition to their reporting functions, COUNTIS E2x with RS485 can be configured remotely and enable access to multi-measurement values.

Dual-tariff metering

Two tariffs are available and can be easily accessed through the meter's display. Each tariff can be utilised to assign energy metering to different time slots (high and low demand hours) or different sources (normal/backup).

Detection of connection errors

The product is protected against phase/neutral inversion and detects wiring errors. This simplifies the installation and commissioning, thereby reducing associated costs, and ensures that the device operates correctly.

Principle diagram

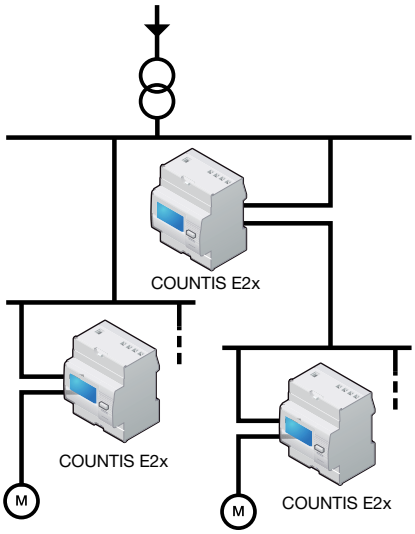

MID certified B+D module

COUNTIS E products with MID certification provide the guaranteed accuracy required for applications in which sub-billing of the electrical energy consumed is necessary. "Module B+D" certification guarantees that the design and manufacturing process of products are approved by an accredited laboratory.

Models	Key functions
E20	Pulse output
E21	Dual tariff (2 partial counters) + Pulse output
E23	MODBUS RS485 communication
E24	MODBUS RS485 communication + MID (Reset impossible)
E25	M-BUS communication
E26	M-BUS communication + MID (Reset impossible)

The solution for

- Industry.
- Infrastructure.
- Data centres.



Strong points

- RS485 communication (MODBUS or M-BUS) or pulse output.
- Dual-tariff metering.
- Detection of connection errors.
- MID certified B+D module.

Conformity to standards

- IEC 62053-21 class 1
- IEC 62053-31
- IEC 62052-11
- EN 50470-1
- EN 50470-3

MID certification

- COUNTIS E comply with the MID directive, guaranteeing accuracy and reliability when metering, an indispensable function for energy billing applications.
- COUNTIS E MID feature tamper-proof components to prevent fraud.

Services & Technical Assistance

- Technical site audits and solution specification, commissioning, maintenance, training… Our Services & Technical Assistance experts offer you personalised support to ensure success with all your projects.

socomec Innovative Power Solutions

Front panel



1. Backlit LCD display.
2. Navigation key.
3. Reset key.
4. Metrological LED (1000 pulses/kWh).

Electrical characteristics

Current measurement	**COUNTIS E20/E21**	**COUNTIS E23…E26**
Type	three-phase direct 63 A	three-phase direct 63 A
Input consumption	0.8 VA max. per phase	0.8 VA max. per phase
Startup current (I_{st})	40 mA	15 mA
Minimum current (I_{min})	0.5 A(1)	0.25 A
Transition current (I_{tr})	1 A(2)	0.5 A
Reference current (I_{ref})	10 A(3)	5 A
Permanent overload (I_{max})	63 A	63 A
Intermittent overload	1890 A max for 10 ms	1890 A max for 10 ms
Voltage measurement		
Range of measurement	230 ... 400 V +/- 20 %	230 ... 400 V +/- 20 %
Consumption (VA)	2 VA max.	2 VA max.
Permanent overload	280 V phase-neutral / 480 V phase-phase	276 V phase-neutral
Energy accuracy		
Active (according to IEC 62053-21)	Class 1	
Power supply		
Self-supplied	yes	
Frequency	50 Hz	

Output (pulsed)	**COUNTIS E20/E21**	
Number	1	
Type of optocoupler	IEC 62053-31 Class A (20 ... 30 VDC)	
Fixed pulse weight	100 Wh	
Pulse duration	100 ms	
Operating conditions	**COUNTIS E20/E21**	**COUNTIS E23…E26**
Operating temperature	-10 to 55 °C	-25 to 55 °C
Storage temperature	-20 to 70 °C	-25 to 70 °C
Relative humidity	85 %	85 %
Communication	**COUNTIS E23/E24/E25/E26**	
Link	RS485	
Type	2 … 3 half duplex wires	
Protocol	MODBUS® RTU	
MODBUS speed	1200 … 38400 bauds	
M-BUS speed	300 … 9600 bauds	

(1) $I_{(min)} \leq 0.5 * Itr$
(2) The accuracy class is guaranteed between I_{tr} and I_{max}.
*(3) $I_{(ref)} = I_{(b)}$ (base current) = 10 * $I_{(b)}$ for direct connection COUNTIS.*

Case

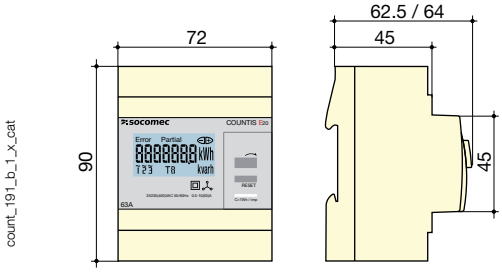

	COUNTIS E20/E21	**COUNTIS E23…E26**
Type	modular	modular
Number of modules	4	4
Dimensions W x H x D	72 x 90 x 62.5 mm	72 x 90 x 64 mm
Case degree of protection	IP20	IP20
Front degree of protection	IP51	IP51
Display type	LCD display	LCD display
Rigid cable cross-section	1.5 to 16 mm²	1.5 to 35mm²
Flexible cable cross-section	1 to 16 mm²	1.5 to 35mm²
Weight	245 g	245 g

Connection

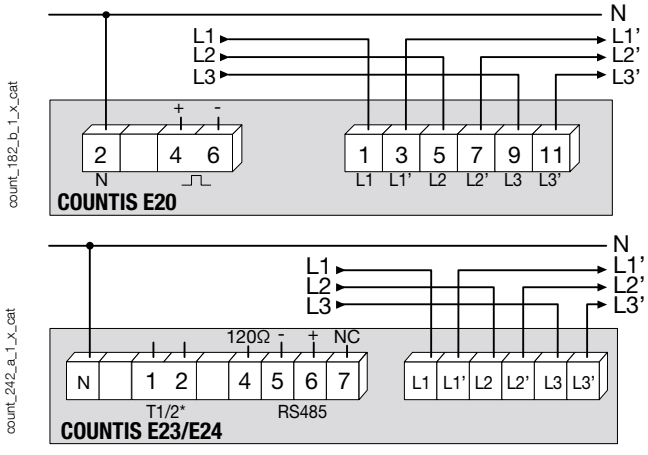

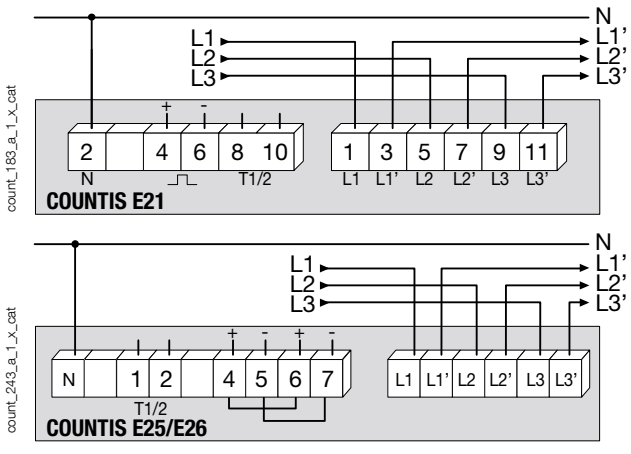

** Not available on COUNTIS E23*

References

Type	**COUNTIS E20 Reference**	**COUNTIS E21 Reference**	**COUNTIS E23 Reference**	**COUNTIS E24 Reference**	**COUNTIS E25 Reference**	**COUNTIS E26 Reference**
direct 63 A - three-phase	4850 **3003**					
direct 63 A - three-phase - Dual tariff		4850 **3004**				
direct 63 A - with MODBUS communication via RS485			4850 **3035**			
direct 63 A - with MODBUS communication via RS485 - MID				4850 **3036**		
direct 63 A - with M-BUS communication					4850 **3037**	
direct 63 A - with M-BUS communication - MID						4850 **3038**



COUNTIS E3x

Active energy meters

three-phase - direct 100 A



count_219_a

COUNTIS E32 - MID

Function

The **COUNTIS E3x** is a modular active electrical energy meter displaying the energy and power consumed (kWh and kW) directly on its backlit LCD display. It is designed for three-phase load metering and is used for direct connections of up to 100 A.

COUNTIS E32, E34 and E36 are MID certified.

Common characteristics

- Measurement accuracy: 1 %
- Backlit LCD display.
- Detects connection errors.

Principle diagram

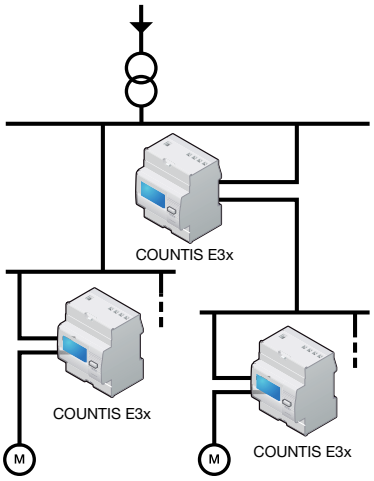

count_225_a_1_x_cat

Advantages

RS485 communication (MODBUS or M-BUS) or pulse output

To enable the remote reporting of energy consumption, COUNTIS E3x are provided with either a pulse output or an RS485 communication output, with MODBUS or M-BUS protocol.

In addition to their reporting functions, COUNTIS E3x with RS485 can be configured remotely and enable access to multi-measurement values.

Detection of connection errors

The product is protected against phase/neutral inversion and detects wiring errors. This simplifies the installation and commissioning, thereby reducing associated costs, and ensures that the device operates correctly.

MID certified B+D module

COUNTIS E products with MID certification provide the guaranteed accuracy required for applications in which sub-billing of the electrical energy consumed is necessary. “Module B+D” certification guarantees that the design and manufacturing process of products are approved by an accredited laboratory.

Bi-directional metering (available only on the E33 and E35)

This function is for metering energy production or energy consumption.

Multi-measurement and load curve

Display of electrical values (I, U, V, S, PF) and load curve over a 7 day period via communication.

Models	Key characteristics
E30	Pulse output
E31	Dual tariff (2 partial counters) + Pulse output
E32	Dual tariff + MID (Reset impossible) + Pulse output
E33	RS485 MODBUS communication
E34	RS485 MODBUS communication + MID (Reset impossible)
E35	RS485 M-BUS communication
E36	RS485 M-BUS communication + MID (Reset impossible)

The solution for

- Industry.
- Infrastructure.
- Data centres.



Strong points

- RS485 communication (MODBUS or M-BUS) or pulse output.
- Detection of connection errors.
- MID certified B+D module.
- Bi-directional metering.
- Multi-measurement and load curve.

MID certification

- COUNTIS E comply with the MID directive, guaranteeing accuracy and reliability when metering, an indispensable function for energy billing applications.
- COUNTIS E MID feature tamper-proof components to prevent fraud.

Conformity to standards

- IEC 62053-21 class 1
- IEC 62053-31
- IEC 62053-11
- EN 50470-1
- EN 50470-3

Front panel



1. Terminal shrouds (COUNTIS E32, E34 and E36).
2. Backlit LCD display.
3. MID marking (COUNTIS E32, E34 and E36).
4. Serial number (COUNTIS E32, E34 and E36).
5. Navigation key.
6. Reset key.
7. Metrological LED.

Case

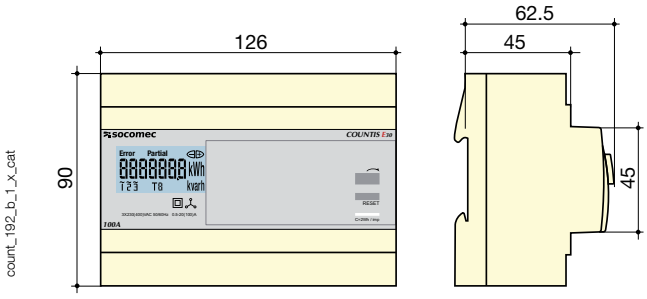

Type	modular
Number of modules	7
Dimensions W x H x D	126 x 90 x 62.5 mm
Case degree of protection	IP20
Front degree of protection	IP51
Display type	backlit LCD display
Rigid cable cross-section	2.5 to 35 mm^2
Flexible cable cross-section	2.5 to 35 mm^2
Weight	490 g

Electrical characteristics

Current measurement	
Type	three-phase - direct 100 A
Input consumption	0.5 VA max. per phase
Startup current (I_{st})	80 mA
Minimum current (I_{min})	0.5 A(1)
Transition current (I_{tr})	2 A(2)
Reference current (I_{ref})	20 A(3)
Permanent overload (I_{max})	100 A
Intermittent overload	3000 A max for 10 ms
Voltage measurement	
Range of measurement	230 ... 400 V +/- 20 %
Consumption (VA)	2
Permanent overload	280 V phase-neutral / 480 V phase-phase
Energy accuracy	
Active (according to IEC 62053-21)	Class 1
Active (according to EN 50470)	Class B
Power supply	
Self-supplied	yes
Frequency	50 / 60 Hz
Output (pulsed)	
Number	1
Type of optocoupler	IEC 62053-31 class A (20 ... 30 VDC)
Fixed pulse weight	100 Wh
Pulse duration	100 ms
Operating conditions	
Operating temperature	-10 to 55 °C
Storage temperature	-20 to 70 °C
Relative humidity	85 %
Communication	
Link	RS485
Type	2 … 3 half duplex wires
Protocol	JBUS/MODBUS RTU
MODBUS® speed	4800 … 38 400 bauds
M-BUS speed	300 … 9 600 bauds

(1) $I_{(min)} \leq 0.5 * Itr$
(2) The accuracy class is guaranteed between I_{tr} and I_{max}.
*(3) $I_{(ref)} = I_{(b)}$ (base current) = 10 * $I_{(tr)}$ for direct connection COUNTIS.*

Connection

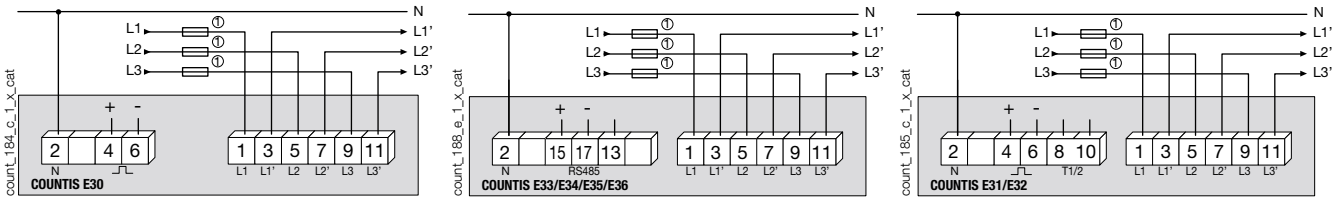

1. 100 A gG / Am fuses max.

References

Type	COUNTIS E30 Reference	COUNTIS E31 Reference	COUNTIS E32 Reference	COUNTIS E33 Reference	COUNTIS E34 Reference	COUNTIS E35 Reference	COUNTIS E36 Reference
100 A direct	4850 **3005**						
100 A direct - Dual tariff		4850 **3006**					
100 A direct - Dual tariff - MID			4850 **3007**				
100 A direct with RS485 MODBUS communication (1)				4850 **3012**			
100 A direct with RS485 MODBUS communication - MID(1)					4850 **3013**		
100 A direct with RS485 M-BUS communication (1)						4850 **3025**	
100 A direct with RS485 M-BUS communication - MID(1)							4850 **3026**
Management software for COUNTIS	See page 72						

(1) 4 tariffs through RS485 communication.



COUNTIS E4x

Active energy meters

three-phase - via CT up to 6000 A



COUNTIS E44 - MID - up to 3000 A via CT

Function

The **COUNTIS E4x** is a modular active and reactive electrical energy meter displaying the energies and active power consumed (kWh, kvarh and kW) directly on its backlit LCD display. It is designed for three-phase load metering with connection via CT and is suitable for applications of up to 6000 A (3000 A for MID).

COUNTIS E42, E44 and E46 are MID certified.

Common characteristics

- Measurement accuracy: 1 %.
- Backlit LCD display.
- Detects connection errors.

Principle diagram

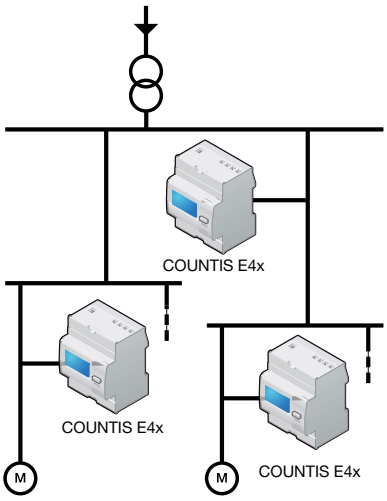

Advantages

RS485 communication (MODBUS or M-BUS) or pulse output

To enable the remote reporting of energy consumption, COUNTIS E4x are provided with either a pulse output or an RS485 communication output, with MODBUS or M-BUS protocol.

In addition to their reporting functions, COUNTIS E4x with RS485 can be configured remotely and enable access to multi-measurement values.

Detection of connection errors

The product is protected against phase/neutral inversion and detects wiring errors. This simplifies the installation and commissioning, thereby reducing associated costs, and ensures that the device operates correctly.

MID certified B+D module

COUNTIS E products with MID certification provide the guaranteed accuracy required for applications in which sub-billing of the electrical energy consumed is necessary. “Module B+D” certification guarantees that the design and manufacturing process of products are approved by an accredited laboratory.

Bi-directional metering (available on E43 and E45)

This function is for metering energy production or energy consumption.

Multi-measurement and load curve

Display of electrical values (I, U, V, S, PF) and load curve over a 7 day period via communication.

Models	Key functions
E40	Pulse output
E41	Dual tariff (2 partial counters) + Pulse output
E42	Dual tariff + MID (Reset impossible) + Pulse output
E43	RS485 MODBUS communication
E44	RS485 MODBUS communication + MID (Reset impossible)
E45	RS485 M-BUS communication
E46	RS485 M-BUS communication + MID (Reset impossible)

The solution for

- Industry.
- Infrastructure.
- Data centres.



Strong points

- RS485 communication (MODBUS or M-BUS) or pulse output.
- Detection of connection errors.
- MID certified B+D module.
- Bi-directional metering.
- Multi-measurement and load curve.

MID certification

- COUNTIS E comply with the MID directive, guaranteeing accuracy and reliability when metering, an indispensable function for energy billing applications.
- COUNTIS E MID feature tamper-proof components to prevent fraud.

Conformity to standards

- IEC 62053-21 class 1
- IEC 62053-23 class 2
- IEC 62053-31
- IEC 62053-11
- EN 50470-1
- EN 50470-3

Front panel

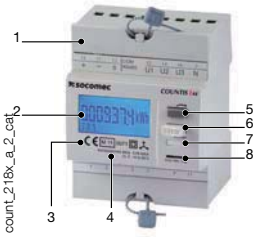

1. Terminal shrouds (COUNTIS E42, E44 and E46).
2. Backlit LCD display.
3. MID marking (COUNTIS E42, E44 and E46).
4. Serial number (COUNTIS E42, E44 and E46).
5. Navigation key.
6. Reset key.
7. Metrological LED.
8. Programming key.

Case

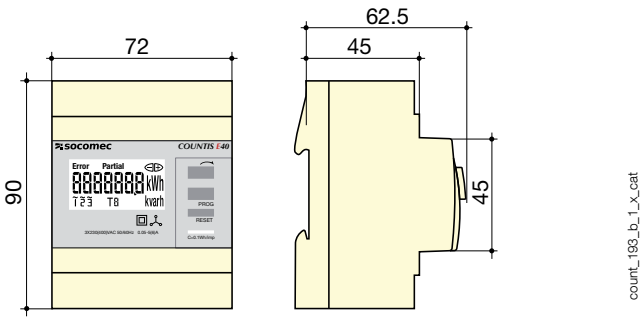

Type	modular
Number of modules	4
Dimensions W x H x D	73 x 90 x 62.5 mm
Case degree of protection	IP20
Front degree of protection	IP51
Display type	backlit LCD display
Rigid cable cross-section	1.5 to 10 mm^2
Flexible cable cross-section	1 to 6 mm^2
Weight	230 g

Electrical characteristics

Current measurement	
Type	three-phase on CT/5A up to 6000 A (3000 A for MID products)
Input consumption	0.2 VA per phase
Startup current (I_{st})	10 mA
Minimum current (I_{min})	50 mA(1)
Transition current (I_{tr})	250 mA(2)
Reference current (I_{ref})	5 A(3)
Permanent overload (I_{max})	6 A
Intermittent overload	120 A for 0.5 s
Voltage measurement	
Range of measurement	230 ... 400 V +/- 20 %
Consumption (VA)	2 VA
Permanent overload	280 V phase-neutral / 480 V phase-phase
Energy accuracy	
Active (according to IEC 62053-21)	Class 1
Active (according to EN 50470)	Class B
Power supply	
Self-supplied	yes
Frequency	50 / 60 Hz
Output (pulsed)	
Number	1
Type of optocoupler	IEC 62053-31 Class A (20 ... 30 VDC)
Pulse weight	100 Wh, 1 kWh, 10 kWh, 100 kWh
Pulse duration	50 ms, 100 ms, 200 ms, 400 ms, 800 ms, 1000 ms, 1500 ms
Operating conditions	
Operating temperature	-10 to 55 °C
Storage temperature	-20 to 70 °C
Relative humidity	85 %
Communication	
Link	RS485
Type	2 … 3 half duplex wires
Protocol	JBUS/MODBUS RTU
MODBUS® speed	4800 … 38400 bauds
M-BUS speed	300 … 9600 bauds

(1) $I_{(min)} \leq 0.5 * Itr$
(2) The accuracy class is guaranteed between I_{tr} and I_{max}.
*(3) $I_{(ref)} = I_{(b)}$ (base current) = 10 * $I_{(tr)}$ for direct connection COUNTIS.*

Connection

Recommendation:
- For IT earthing systems, it is recommended that the CT secondary is not connected to earth.
- When disconnecting the COUNTIS, the secondary of each current transformer must be short-circuited. This operation can be carried out automatically by a SOCOMEC PTI, an accessory which is included in this catalogue. Please refer to page

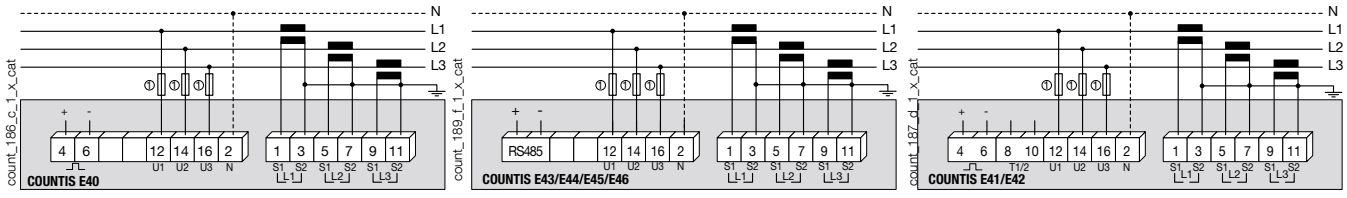

1. Fuses 0.5 A gG / 0.5 A class CC.

References

Type	COUNTIS E40 Reference	COUNTIS E41 Reference	COUNTIS E42 Reference	COUNTIS E43 Reference	COUNTIS E44 Reference	COUNTIS E45 Reference	COUNTIS E46 Reference
Via CT	4850 **3008**						
Via CT - Dual tariff		4850 **3009**					
Via CT - Dual tariff - MID			4850 **3015**				
Via CT with RS485 MODBUS communication(1)				4850 **3017**			
Via CT with RS485 MODBUS communication - MID(1)					4850 **3014**		
Via CT with RS485 M-BUS communication(1)						4850 **3027**	
Via CT with RS485 M-BUS communication - MID(1)							4850 **3028**
Management software for COUNTIS	See page 72						

(1) 4 tariffs through RS485 communication.



COUNTIS E5x

Active energy meters

three-phase - via CT up to 6000 A



count_196_b_1_cat

COUNTIS E53 *up to 6000 A via CT*

The solution for

- Industry.
- Infrastructure.
- Data centres.



Strong points

- RS485 MODBUS communication or pulse output.
- Large backlit LCD display.
- Detection of connection errors.
- Direct display of multi-measurement and metering values.

Conformity to standards

- IEC 62053-23 class 2
- IEC 62053-22 class 0.5S
- IEC 61557-12

Management software

- To get the most effective use from your Socomec measurement and metering devices, we offer a range of dedicated software tools. See page 72.

Function

The **COUNTIS E5x** is a panel mounted active and reactive electrical energy meter displaying energy and multi-measurement values directly on its large backlit LCD display. It is designed for utilisation on three-phase or single-phase networks with connection via CT and is suitable for applications of up to 6000 A. The CT ratio can be configured by the user via the keypad and the display, or via RS485MODBUS communication (E53).

Common characteristics

- Measurement accuracy: 0.5%.
- Large backlit LCD display.
- Direct access to multi-measurement and metering values.
- Detects connection errors.

Advantages

RS485 MODBUS communication or pulse output

To enable the remote reporting of energy consumption, COUNTIS E5x are provided with either a pulse output (E50) or an RS485 MODBUS communication output (E53).

Remote configuration of the Countis E53 is possible via RS485 MODBUS communication.

Detection of connection errors

The COUNTIS E5x is protected against phase/neutral inversion and has an integrated test function which can be utilised to detect wiring errors. This function enables CT installation errors to be corrected without having to remake connections. This simplifies the installation and commissioning, thereby reducing associated costs, and ensures that the device operates correctly.

Large backlit LCD display

Thanks to its large backlit LCD display and its multiple viewing screens with direct pushbutton access, COUNTIS E5x provide clear readings and are easy to use.

Principle diagram

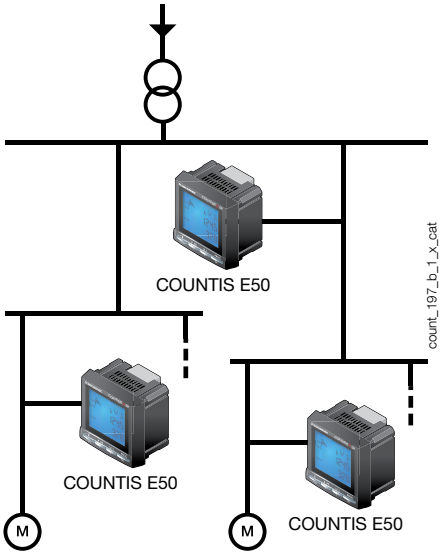

count_197_b_1_x_cat

They directly display a number of total/partial metering and multi-measurement values : +/- kWh, +/- kvarh, kVAh, I, U, V, S, PF, etc.

Direct display of multi-measurement and metering values

Multi-measurement

- Currents: instantaneous: I1, I2, I3
- Voltages: instantaneous: U1, U2, U3, U12, U23, U31
- Power:
  - instantaneous: 3P, 3Q, 3S
  - maximum average: 3P
- Power factor:
  - instantaneous: 3PF

Metering

- Active energy: +/- kWh
- Reactive energy: +/- kvarh
- Apparent energy: kVAh

models	Key characteristics
E50	Pulse output
E53	RS485 MODBUS communication

socomec Innovative Power Solutions

References

Type	COUNTIS E50 Reference	COUNTIS E53 Reference
Pulse output	4850 **3010**	
RS485 MODBUS communication (1)		4850 **3011**
Management software for COUNTIS	See page 72	

(1) 4 tariffs through RS485 communication.

Electrical characteristics

Current measurement	
Type	three-phase on CT/5A up to 6000 A
Input consumption	< 0.6 VA
Startup current (I_{st})	40 mA
Minimum current (I_{min})	50 mA(1)
Transition current (I_{tr})	250 mA(2)
Reference current (I_{ref})	5 A(3)
Permanent overload (I_{max})	6 A
Intermittent overload	50 A for 1 s
Voltage measurement	
Range of measurement	86 … 520 VAC
Input consumption	< 0.1 VA
Permanent overload	800 VAC
Energy accuracy	
Reactive (according to IEC 62053-23)	Class 2
Active (according to IEC 62053-22)	Class 0.5S
Power supply	
Self-supplied	no
Auxiliary power supply U_s	110 … 400 VAC / 125… 350 VDC +/-10 %
Frequency	45 … 65 Hz
Output (pulsed)	
Number	1
Type	100 VDC - 0.5 A - 10 VA
Max. number of operations	≤ 10^8
Operating conditions	
Operating temperature	-10 … 55 °C
Storage temperature	-20 … 85 °C
Relative humidity	95 %

(1) $I_{(min)} \leq 0.5 * I_{tr}$
(2) The accuracy class is guaranteed between I_{tr} and I_{max}.
*(3) $I_{(ref)} = I_{(b)}$ (base current) = 10 * $I_{(tr)}$ for direct connection COUNTIS.*

Front panel



1. Backlit LCD display
2. Energy display and test function key
3. Power and power factor display key
4. Current and voltage display key
5. Programming mode access key

Case

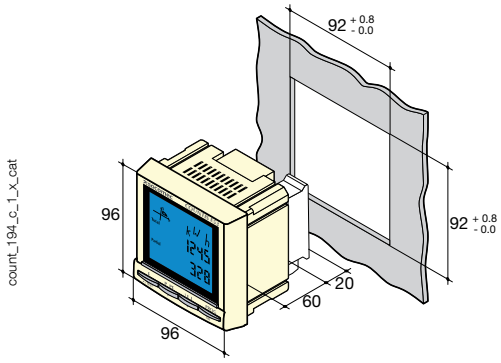

Type	Panel mounting
Dimensions W x H x D	96 x 96 x 80 mm
Case degree of protection	IP30
Front degree of protection	IP52
Display type	backlit LCD display
Voltage and current connection cross-section	0.5 … 2.5 mm²
Current connection cross-section	1.5 … 6 mm²
Weight	370 g

Connection

Recommendation:

- For IT earthing systems, it is recommended that the CT secondary is not connected to earth.
- When disconnecting the COUNTIS, the secondary of each current transformer must be short-circuited. This operation can be carried out automatically by a SOCOMEC PTI, an accessory which is included in this catalogue. Please refer to page

Low voltage balanced network
3/4 wires with 1 CT

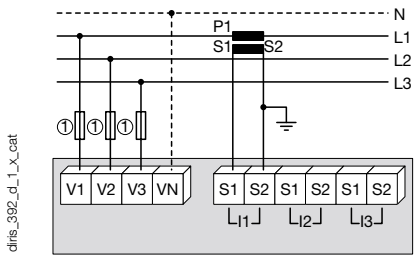

Use of 1 CT reduces by 0.5% the accuracy of the phases, the current of which is worked out by vector calculation.

Low voltage unbalanced network
3/4 wires with 3 CTs

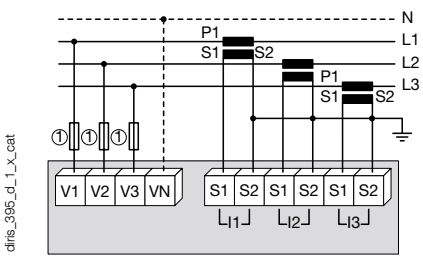

3 wires with 2 CTs

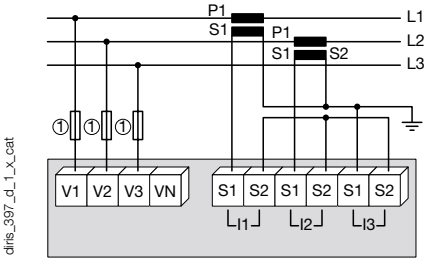

Use of 2 CT reduces by 0.5% the accuracy of the phases, the current of which is worked out by vector calculation.

Additional information

Communication via RS485 link

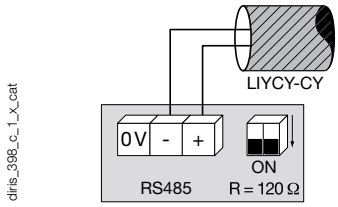

AC & DC auxiliary power supply

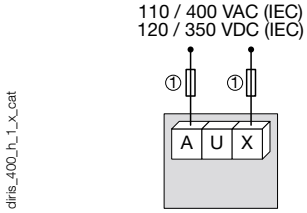

1. Fuses 0.5 A gG / 0.5 A class CC.



COUNTIS E63

Active energy meters

3 x single-phase - Direct 100 A



COUNTIS E63

Function

The **COUNTIS E63** is a modular active electrical energy meter which provides metering for three single-phase loads, with direct connection of up to 100 A. It directly displays the total and partial energy and power (kWh and kW) consumed by each single-phase load.

Principle diagram

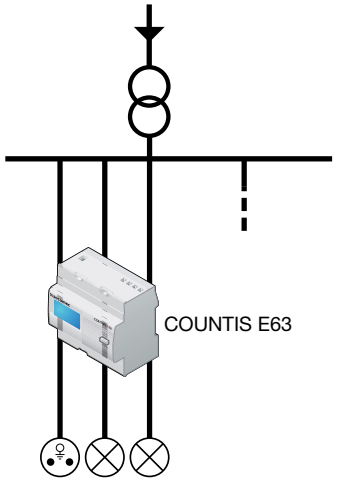

count_205_a_1_x_cat

Advantages

Compact

Due to the integration of three single-phase meters in the same case (7 modules wide), the COUNTIS E63 provides significant space-saving.

Advanced multi-measurement functions

Advanced multi-measurement functions are available via RS485 MODBUS communication:

- Instantaneous currents: I1, I2, I3
- Instantaneous voltages: U1, U2, U3
- Instantaneous power: 3P, 3S
- Instantaneous power factors: 3PF
- Load curves for each of the 3 phases: Viewing of average positive active power consumption over a programmable period.

Detection of connection errors

The product is protected against phase/neutral inversion and detects wiring errors. This simplifies the installation and commissioning, thereby reducing associated costs, and ensures that the device operates correctly.

The solution for

> Data centres.
> Infrastructure.



Strong points

> Compact.
> Advanced multi-measurement functions.
> Detection of connection errors.

Conformity to standards

> IEC 62053-21 class 1
> IEC 62053-31
> IEC 62053-11

Management software

> To get the most effective use from your Socomec measurement and metering devices, we offer a range of dedicated software tools. See page 72.

Front panel



1. Backlit LCD display
2. Navigation key
3. Reset key
4. Metrological LED

Electrical characteristics

Current measurement	
Type	3 x single-phase - direct 100 A
Input consumption	0.5 VA max. per phase
Startup current (I_{st})	80 mA
Minimum current (I_{min})	0.5 A
Transition current (I_{tr})	2 A
Reference current (I_{ref})	20 A
Permanent overload (I_{max})	100 A
Intermittent overload	3000 A max for 10 ms
Voltage measurement	
Range of measurement	230 ... 400 V +/- 20 %
Consumption on inrush (VA)	2
Permanent overload	280 V phase-neutral / 480 V phase-phase
Energy accuracy	
Active (according to IEC 62053-21)	Class 1

Power supply	
Self-supplied	yes
Frequency	50 / 60 Hz
Operating conditions	
Operating temperature	-10 to 55 °C
Storage temperature	-20 to 70 °C
Relative humidity	95 %
Communication	
Link	RS485
Type	2 … 3 half duplex wires
Protocol	MODBUS RTU
MODBUS® speed	4800 … 38400 bauds

Case

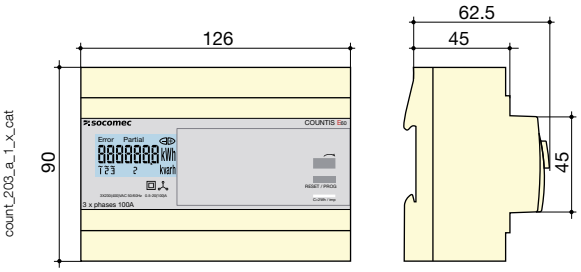

Type	modular
Number of modules	7
Dimensions W x H x D	126 x 90 x 62.5 mm
Case degree of protection	IP20
Front degree of protection	IP51
Display type	backlit LCD display
Rigid cable cross-section	2.5 to 35 mm²
Flexible cable cross-section	2.5 to 35 mm²
Weight	490 g

Connection

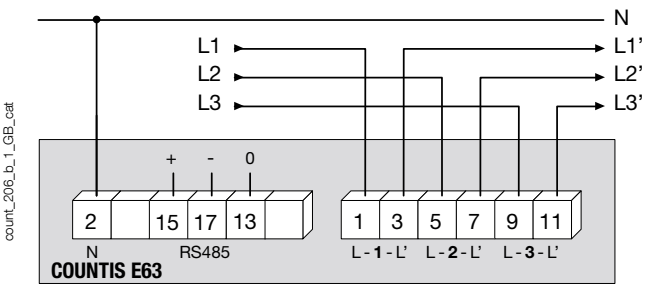

References

Type	COUNTIS E63 Reference
3 x single phase - 100 A direct with RS485 MODBUS communication	4850 **3016**



COUNTIS ECix

Multi-utility pulse concentrator



COUNTIS ECi3

The solution for

- Data centres.
- Industry.
- Infrastructure.



Strong points

- Up to 7 multi-utility meters and 2 analogue sensors.
- Load curves.
- RS485 MODBUS communication.
- Improved customisation.

Management software

- To get the most effective use from your Socomec measurement and metering devices, we offer a range of dedicated software tools. See page 72.

Function

The **COUNTIS ECix** is a multi-utility pulse concentrator which communicates via an RS485 link using MODBUS protocol.

It enables pulses from water, gas, compressed air, electricity meters and, for the COUNTIS ECi3, the output of analogue sensors (light, temperature, wind etc.) to be registered and stored. All data, ie. total and partial meters and load curves (available for all logical and analogue inputs) can be centralised via RS485 communication using MODBUS protocol.

Principle diagram

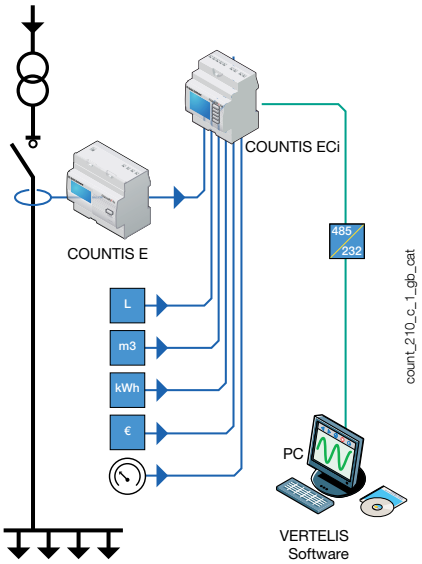

Advantages

Up to 7 multi-utility meters and 2 analogue sensors

- 7 logical inputs + 2 analogue inputs.
- Total, partial and programmable metering (day, week, month, year).

Load curves

Load curves are available for each of the 7 logical inputs.

A history of average values are available for the 2 analogue inputs (ECi3).

RS485 MODBUS communication

- Centralisation and transmission of pulse and analogue data to a supervision station.
- Remote configuration of COUNTIS ECi device.

Improved customisation

- Selection of the measuring unit: kWh, m^3, liters.
- Selection of the currency unit: €, K€, £, $.

Values can be displayed in the unit of your choice and energy costs can be directly calculated.

Models	Key characteristics
ECi2	7 insulated inputs
ECi3	7 insulated inputs + 2 analogue inputs.

socomec Innovative Power Solutions

Front panel

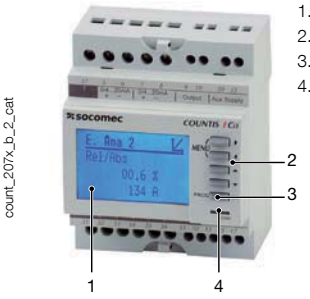

1. Backlit LCD display.
2. Navigation keys.
3. Validation pushbutton in programming mode.
4. Communication status indicator (COM).

Case

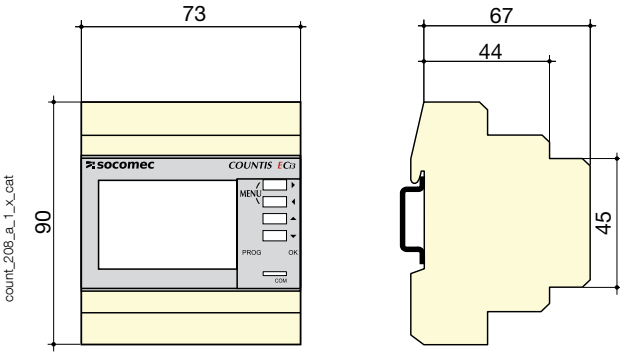

Type	modular
Number of modules	4
Dimensions W x H x D	73 x 90 x 67 mm
Case degree of protection	IP20
Front degree of protection	IP51
Display type	backlit LCD display
Terminal blocks type	fixed
Rigid cable cross-section	1… 10 mm²
Flexible cable cross-section	0.5… 6 mm²
Weight	215 g

Characteristics

Auxiliary power supply	
Self-supplied	no
Alternating voltage	110 / 400 VAC
Direct voltage	120 / 300 VDC
Tolerance	± 10 %
Frequency	45 / 65 Hz
Consumption	5 VA
Insulation voltage	3.5 kV
Communication	
Link	RS485
Type	2 … 3 half duplex wires
Protocol	MODBUS RTU
MODBUS® speed	9600… 38400 bauds
Inputs	
Number	7
Control voltage (integrated)	10…30 VDC
Minimum signal width	10 ms
Maximum signal width	2 s
Minimum duration between 2 pulses	30 ms
Edge triggering	rising
Analogue inputs (ECi3)	
Number	2
Current	25 mA
Accuracy	0.5 %
Response time	500 ms
Input resistance	200 Ω
Consumption	0.1 VA
Operating conditions	
Operating temperature	-10… +55 °C
Storage temperature	-20… +70 °C
Relative humidity	95 %

Connection

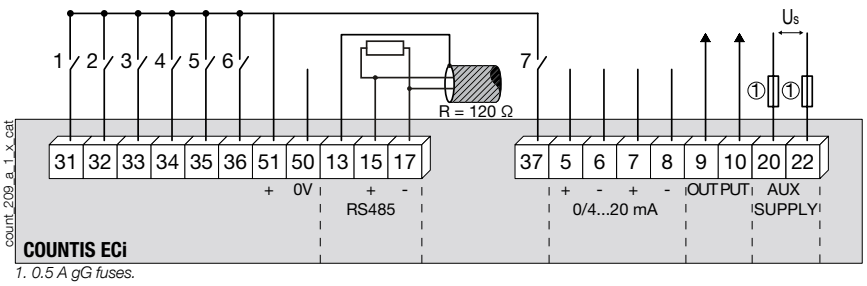

1. 0.5 A gG fuses.

31: logical input n°1.
32: logical input n°2.
33: logical input n°3.
34: logical input n°4.
35: logical input n°5.
36: logical input n°6.
37: logical input n°7.

51-50: Inputs internal/ external power supply.

13-15-17: RS485 link.

5-6: Analogue input n°1.
7-8: Analogue input n°2.
9-10: output.
20-22: power supply U=110...400 VAC ± 10 %.

References

Auxiliary power supply U_s	**COUNTIS ECi2 Reference**	**COUNTIS ECi3 Reference**
230 / 400 VAC	4853 **0000**	
230 / 400 VAC + 2 analogue inputs		4853 **0001**
Description of accessories	**Reference**	**Reference**
Panel mounting kit	192J **8015**	192J **8015**
Management software for COUNTIS	See page 72	



MULTIS L20 / L40

Measurement devices

96 x 96 - Three phases - All electrical parameters measurement



multi_054_a_1_cat



multi_055_a_1_cat

Function

The SOCOMEC MULTIS range 96 x 96 insure the measurement of all your electrical parameters, V, A, Hz, P, Q, S, COS φ… For Single and Three phases network.

Applications

- The MULTIS L20 is a digital LV and HV three phase measurement device.It displays simultaneously the 3 phases + neutral and the most frequent values for an electrical installation or for monitoring generator sets.
- The MULTIS L40 is a digital three phase multimeter for measuring electrical values in LV and HV networks. In addition to the MULTIS L20 functions the MULTIS L40 also offers MODBUS RTU communication via RS485, measurement of the energies (active, reactive) and pulse output.

Multi-meter MULTIS L20

Electrical characteristics

Measurements	
AC network	LV or HV, three phase + neutral
Measurement range	Secondary 0.05…5.5 A Primary 5/5 A ... 10000/5 A Primary 1/1 A ... 2000/1 A Secondary 10…300 VAC Primary 10 V…200 kVAC
Measurement range between phases	10 … 500 VAC
Accuracy	1 % ± 1 digit

Auxiliary power supply	
Voltage	190 … 260 VAC
Frequency	45 … 65 Hz
Consumption	< 4 VA
Operating conditions	
Operating temperature	-5 … +50 °C

socomec Innovative Power Solutions

Case

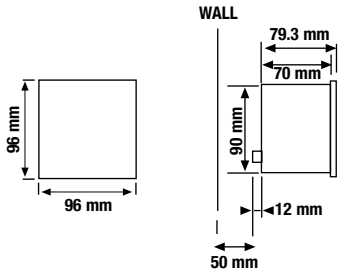

Type	panel mounting
Dimensions W x H x D	96 x 96 x 82 mm
Panel cut out dimensions (H x W)	91 x 91 mm
Front protection rating	IP40
Weight	0.56 kg

Connection

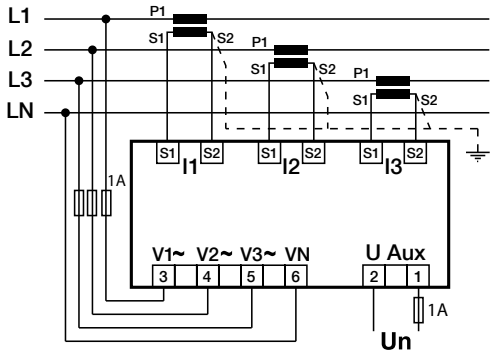

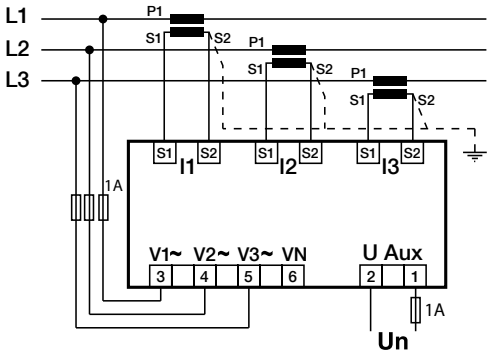

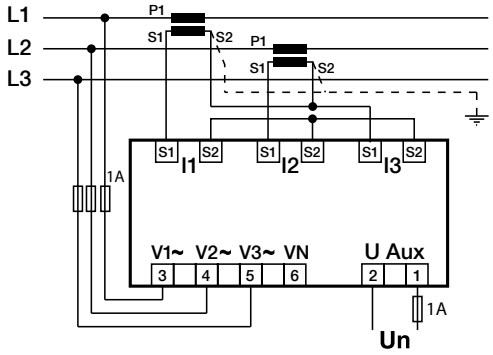

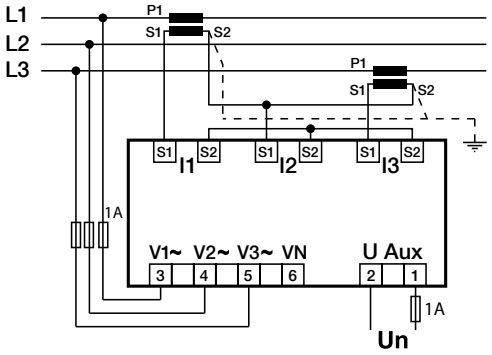

References

Auxiliary supply	Frequency	MULTIS L20 Reference
190 ... 260 VAC	50/60 Hz	192J **9100**



multi_l064_a_1_cat

MULTIS L20 / L40

Measurement devices

96 x 96 - Three phases - All electrical parameters measurement

Multi-meter MULTIS L40

Electrical characteristics

Measurements	
AC network	LV or HV, three phase + neutral
Measurement range	Secondary 0.05…5.5 A Primary 5/5 A ... 10000/5 A Primary 1/1 A ... 2000/1 A Secondary 10…300 VAC Primary 10 V…200 kVAC
Measurement range between phases	10 … 500 VAC
Accuracy	1 % ± 1 digit
Communication	
Type	MODBUS RTU via RS485

Pulse output	
Weight	1 Wh … 1 MWh / 1 VArh … 1 MVArh
Operation current	50 mA max.
Operation voltage	5 … 24 VDC ; 30 VDC max.
Pulse duration	100 ms max.
Input	
Operation voltage	12 … 48 VAC / DC
Auxiliary power supply	
Voltage	190 … 260 VAC
Frequency	45 … 65 Hz
Consumption	< 4 VA
Operating conditions	
Operating temperature	-5 … +50 °C

Case

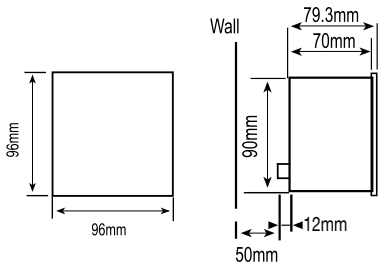

Type	panel mounting
Dimensions W x H x D	96 x 96 x 82 mm
Panel cut out dimensions (H x W)	91 x 91 mm
Front protection rating	IP40
Weight	0.45 kg

Connection

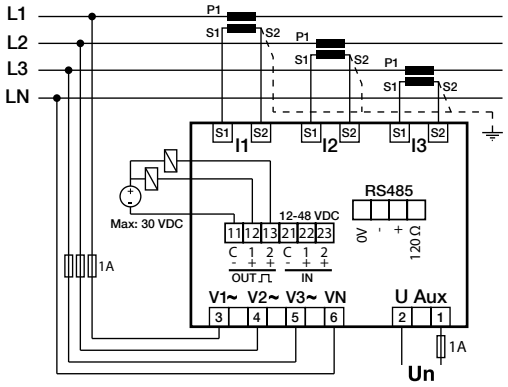

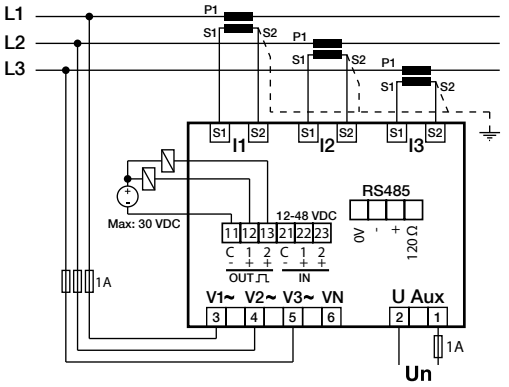

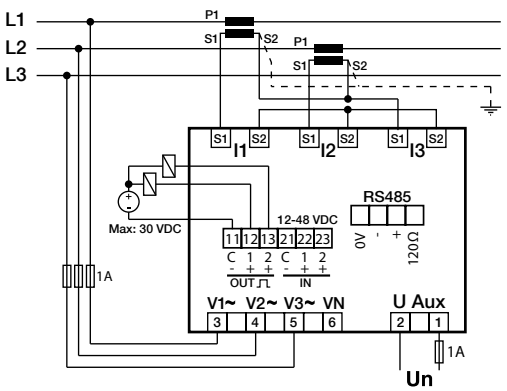

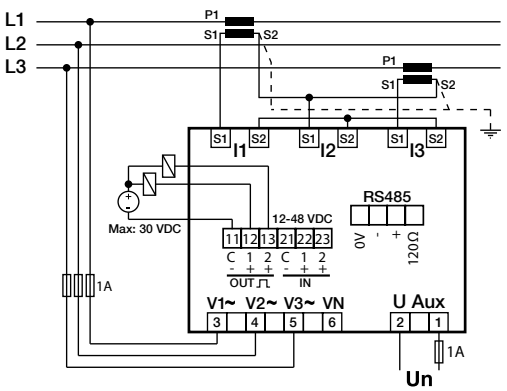

socomec Innovative Power Solutions

Computer Connection

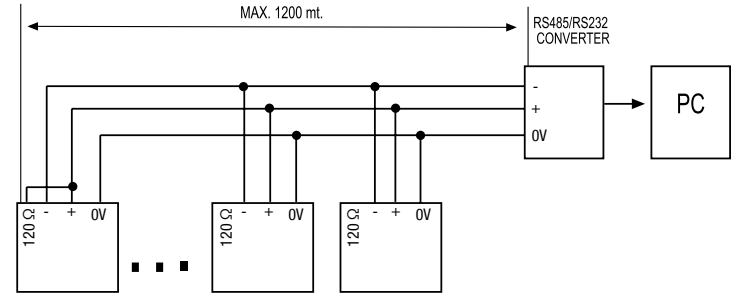

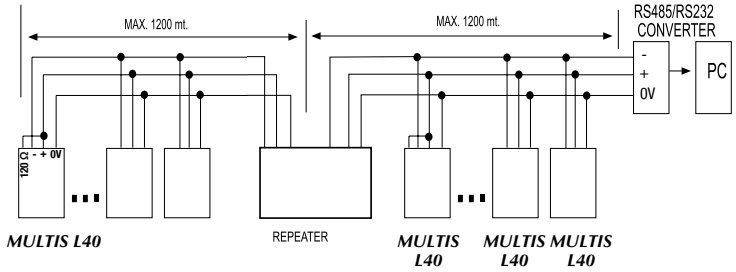

References

Auxiliary supply	Frequency	MULTIS L40 Reference
190 ... 260 VAC	50/60 Hz	192J **9110**





MULTIS I30 / V30

Measurement devices

96 x 96 - Three phases - Current or voltage measurement



multi_053_b_1_cat



multi_057_b_1_cat

Function

The SOCOMEC **MULTIS** range 96 x 96 insure the measurement of all your electrical parameters for three phases application, V, A.

Applications

- The **MULTIS V30** is a 3 phase digital voltmeter for AC network. Single phase display (selectable) 96 x 96.
- The **MULTIS I30** is a 3 phase digital ammeter for AC network 3P+N display 96 x 96.

Case I30

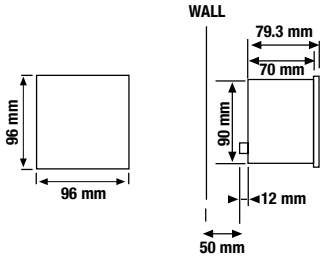

Type	panel mounting
Dimensions W x H x D	96 x 96 x 82 mm
Panel cut out dimensions (H x W)	91 x 91 mm
Front protection rating	IP40
Weight	0.45 kg

Case V30

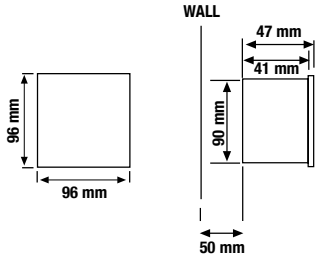

Type	panel mounting
Dimensions W x H x D	96 x 96 x 41 mm
Panel cut out dimensions (H x W)	91 x 91 mm
Front protection rating	IP40
Weight	0.31 kg

Ammeter MULTIS I30

Electrical characteristics

Measurements	
AC network	LV three phase + neutral
Measurement range	0.05 ... 5.5 A 5 ... 10 000 A / 5 A
Accuracy	1 % ± 1 digit

Auxiliary power supply	
Voltage	190 ... 260 VAC
Frequency	45 ... 65 Hz
Consumption	< 4 VA
Operating conditions	
Operating temperature	-5 ... +50 °C

Connection

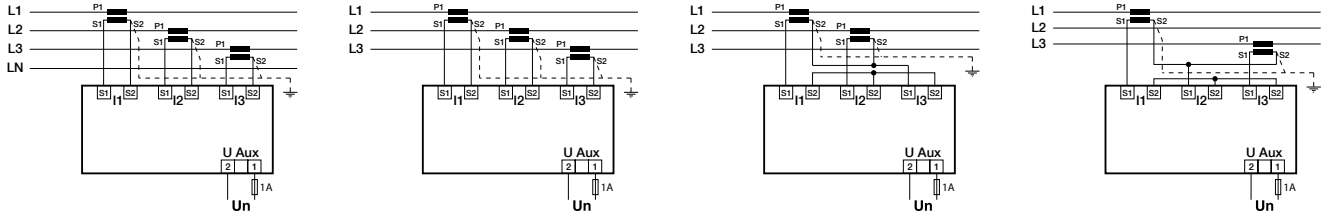

References

Auxiliary supply	Frequency	MULTIS I30 Reference
190 ... 260 VAC	50/60 Hz	192J **9023**



multi_057_b_2_cat

Voltmeter MULTIS V30

Electrical characteristics

Measurements	
AC network	LV three phase + neutral
Measurement range between phase and neutral	10 ... 300 VAC
Measurement range between phases	10 ... 500 VAC
Accuracy	1 % ± 1 digit

Auxiliary power supply	
Voltage	190 ... 260 VAC
Frequency	45 ... 65 Hz
Consumption	< 4 VA
Operating conditions	
Operating temperature	-5 ... +50 °C

Connection

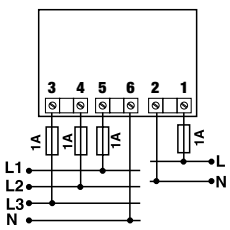

References



multi_053_b_2_cat

Auxiliary supply	Frequency	MULTIS V30 Reference
230 VAC	50/60 Hz	192J **9013**



MULTIS I10 / I11 / V10 / F10

Measurement devices

72 x 72 - 1 phase - Current, voltage or frequency measurement



multi_052_a_1_cat



multi_051_a_1_cat

Function

The single phase SOCOMEC **MULTIS** range 72 x 72 insure the measurement of all electrical parameters V, A, Hz.

Applications

- The **MULTIS I10** is a single phase digital ammeter for AC network including current transformer (TCA 15).
- The **MULTIS I11** is a single phase digital ammeter for AC network.
- The **MULTIS V10** is a single phase digital voltmeter for AC network.
- The **MULTIS F10** is a digital frequency meter for AC network.

Electrical characteristics

Measurements	
AC network	**LV single phase**
Measurement range	MULTIS I10: 0.07 … 200 A MULTIS I11: 0.05 … 5.5 A 5 … 10 000 A / 5 A
Accuracy	1 % ± 1 digit
Auxiliary power supply	
Voltage	190 … 260 VAC
Frequency	45 … 65 Hz
Consumption	< 4 VA
Operating conditions	
Operating temperature	-5 … +50 °C

Ammeter MULTIS I10 & I11

Case

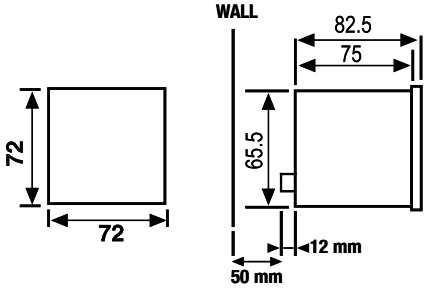

Type	panel mounting
Dimensions W x H x D	72 x 72 x 87 mm
Panel cut out dimensions (H x W)	67 x 67 mm
Front protection rating	IP40
Weight	0.31 kg

Ammeter MULTIS I10 & I11

Connection

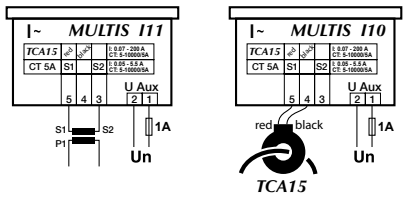

References



multi_052_a_1_cat

Auxiliary supply	Frequency	MULTIS I10 with CT TCA15 Reference	MULTIS I11 Reference
190 ... 260 VAC	50/60 Hz	192J **9021**	192J **9022**

Voltmeter MULTIS V10

Case

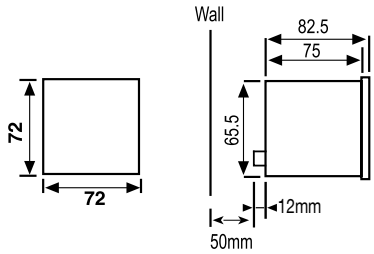

Type	panel mounting
Dimensions W x H x D	72 x 72 x 87 mm
Panel cut out dimensions (H x W)	67 x 67 mm
Front protection rating	IP40
Weight	0.28 kg

Electrical characteristics

Measurements	
AC network	LV single phase
Measurement range	10 ... 600 VAC
Accuracy	1 % ± 1 digit
Auxiliary power supply	
Voltage	190 ... 260 VAC
Frequency	45 ... 65 Hz
Consumption	< 4 VA
Operating conditions	
Operating temperature	-5 ... +50 °C

Connection

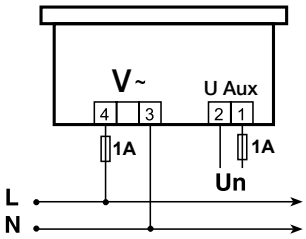

References



multi_056_a_1_cat

Auxiliary supply	Frequency	MULTIS V10 Reference
190 ... 260 VAC	50/60 Hz	192J **9011**

Frequency meter MULTIS F10

Case

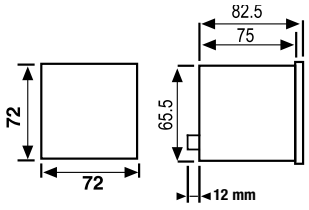

Type	panel mounting
Dimensions W x H x D	72 x 72 x 87 mm
Panel cut out dimensions (H x W)	67 x 67 mm
Front protection rating	IP40
Weight	0,28 kg

Electrical characteristics

Measurements	
AC network	LV single phase
Measurement range	20 ... 400 Hz
Measuring Input	30 - 300 VAC (L-N) 50 - 500 VAC (L-L) 10 - 150 VAC (L-L/L-N)
Accuracy	1 % ± 1 digit
Auxiliary power supply	
Voltage	190 ... 260 VAC
Frequency	45 ... 65 Hz
Consumption	< 4 VA
Operating conditions	
Operating temperature	-5 ... +50 °C

Connection

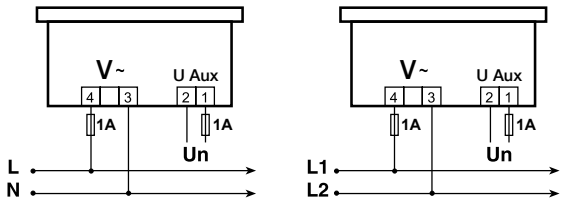

References



multi_051_a_1_cat

Auxiliary supply	Frequency	MULTIS F10 Reference
190 ... 260 VAC	50/60 Hz	192J **9050**



DIRIS A10

Multifunction meters - MFM

Modular multifunction meter



DIRIS A10

Function

The **DIRIS A10** is a modular multifunction meter for measuring electrical values in low voltage networks.

It allows all electrical parameters to be displayed and utilised for communication and/or output functions.

Advantages

Easy to use

Five direct access pushbuttons enable all measurements to be clearly viewed on its backlit LCD display.

Integrated temperature sensor

It allows variations in temperature to be detected.

Detects wiring errors

An integrated test function can be utilised to detect incorrect wiring and to automatically correct CT installation errors.

Compliant with IEC 61557-12

IEC 61557-12 is a high-level standard for all PMDs (Performance Monitoring Devices) that are designed to measure and monitor electrical parameters in distribution networks.

Compliance with IEC 61557-12 ensures a high level of equipment performance, in terms of metrology, and the mechanical and environmental aspects (EMC, temperature, etc.).

Principle diagram

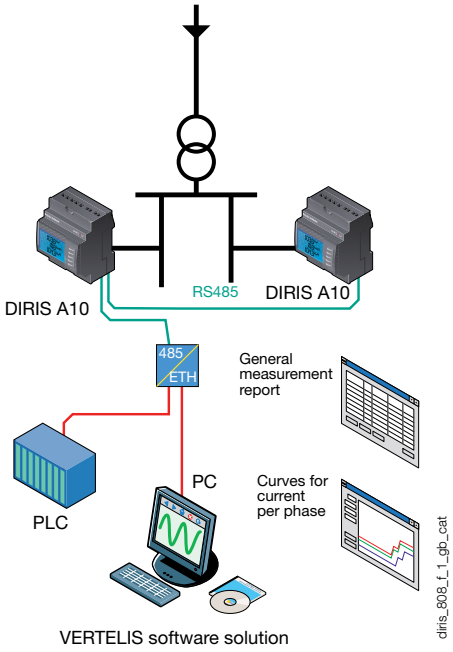

The solution for

- Industry.
- Infrastructures.
- Data centres.



Strong points

- Easy to use.
- Integrated temperature sensor.
- Detects wiring errors.
- Compliant with IEC 61557-12.

Conformity to standards

- IEC 61557-12
- IEC 62053-22 class 0.5S
- IEC 62053-23 class 2

Functions

Multi-measurement
- Currents
  - instantaneous: I1, I2, I3, In
  - maximum average: I1, I2, I3, In
- Voltages & frequency
  - instantaneous: U1, U2, U3, U12, U23, U31, F
- Power
  - instantaneous: 3P, ΣP, 3Q, ΣQ, 3S, ΣS
  - maximum average: ΣP, ΣQ, ΣS
- Power factors
  - instantaneous: 3PF, ΣPF

Metering
- Active energy: + kWh
- Reactive energy: + kVarh
- Hours:

Harmonic analysis
- Total harmonic distortion (level 51)
  - Currents: thd I1, thd I2, thd I3
  - Phase-to-neutral voltage: thd U1, thd U2, thd U3
  - Phase-to-phase voltage: thd U12, thd U23, thd U31

Dual tariff function

Selection of one out of 2 billing tariffs

Events

Alarms on all electrical values

Communications(1)

RS485 with MODBUS protocol

Input

Tariff selection

Remote device status

Output
- Remote command of device
- Alarm report
- Pulse report

(1) Available on specific version (see the following pages).

socomec Innovative Power Solutions

Front panel



1. Backlit LCD display
2. Direct access key for currents (instant and maximum), current THD and test function.
3. Direct access key for voltages, frequency and voltage THD.
4. Direct access key for active, reactive and apparent power (instantaneous and max. values) and power factor.
5. Direct access key for energies.
6. Pushbutton for hour meter, temperature and programming menu access.
7. Metrological LED.

Case

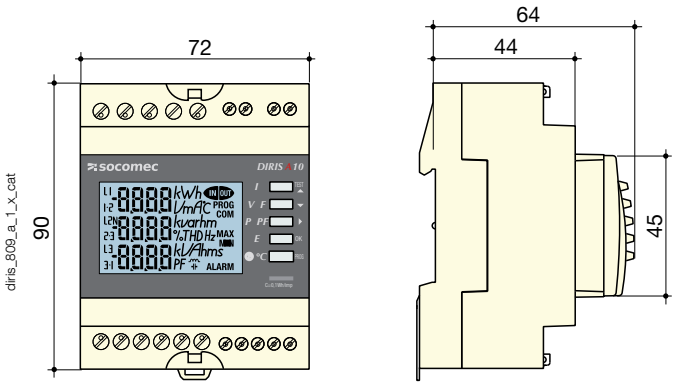

Type	modular
Number of modules	4
Dimensions W x H x D	72 x 90 x 64 mm
Case degree of protection	IP 30
Front degree of protection	IP 52
Display type	backlit LCD display
Voltage and current connection cross-section	4 mm^2
Connection cross-section for AUX supply, input, output and comms.	2.5 mm^2
Weight	205 g (4825 0010) - 215 g (4825 0011)

Electrical characteristics

Current measurement on high-impedance inputs (TRMS)	
Via CT primary	9 999 A
Via CT secondary	5 A
Measurement range	0 … 11 kA
Input consumption	0.6 VA
Measurement updating period	1 s
Accuracy	0.2 %
Permanent overload	6 A
Intermittent overload	10 I_n for 1 s
Voltage measurements (TRMS)	
Direct measurement between phases	50 … 500 VAC
Direct measurement between phase and neutral	28 … 289 VAC
Input consumption	≤ 0.1 VA
Measurement updating period	1 s
Accuracy	0.2 %
Permanent overload	800 VAC
Power measurement	
Measurement updating period	1 s
Accuracy	0.5 %
Power factor measurement	
Measurement updating period	1 s
Accuracy	0.5 %
Frequency measurement	
Measurement range	45 … 65 Hz
Measurement updating period	1 s
Accuracy	0.1 %

Energy accuracy	
Active (according to IEC 62053-22)	Class 0.5 S
Reactive (according to IEC 62053-23)	Class 2
Auxiliary power supply	
Alternating voltage	110 … 277 VAC
AC tolerance	± 15 %
Frequency	50 / 60 Hz
Consumption	< 3 VA
Digital output (pulses or on/off)	
Number	1
Type	20 / 30 VDC - 0.5 A - 10 VA
Max. number of operations	≤ 10^8
Input (tariff)	
Number	1
Type	0 VAC: T1 / 200-277 VAC: T2
Communication	
Link	RS485
Type	2 … 3 half duplex wires
Protocol	MODBUS RTU
MODBUS® speed	2400 … 38400 bauds
Operating conditions	
Operating temperature	- 10 … + 55 °C
Storage temperature	- 20 … + 70 °C
Relative humidity	85 %

Connection

Recommendation:
- For IT earthing systems, it is recommended that the CT secondary is not connected to earth.
- When disconnecting the DIRIS, the secondary of each current transformer must be short-circuited. This operation can be carried out automatically by a SOCOMEC PTI, an accessory which is included in this catalogue. Please consult us.
- It is recommended that the earthing point for the DIRIS A10 and the current transformer secondaries are not earthed at the same time.

Low voltage balanced network

3/4 wires with 1 CT

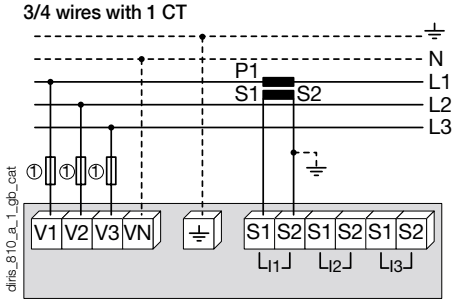

1. Fuses 0.5 A gG / 0.5 A class CC.

Single-phase

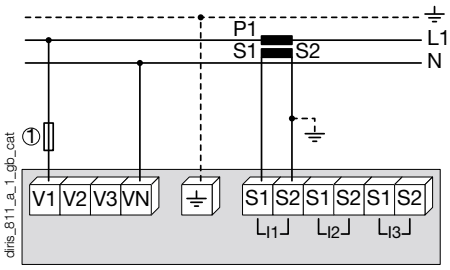

1. Fuses 0.5 A gG / 0.5 A class CC.

Two-phase

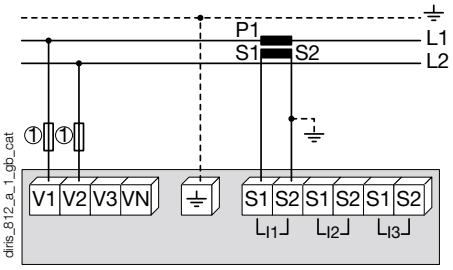

1. Fuses 0.5 A gG / 0.5 A class CC.

Low voltage unbalanced network

3/4 wires with 3 CTs

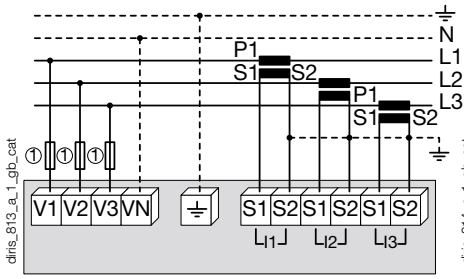

1. Fuses 0.5 A gG / 0.5 A class CC.

3 wires with 2 CTs

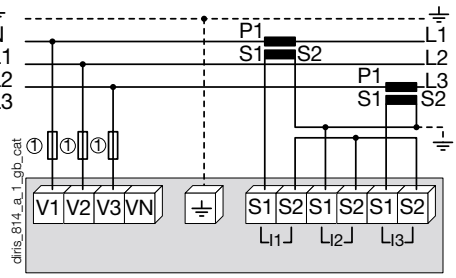

Use of 2 CTs reduces by 0.5% the accuracy of the phases, the current of which is worked out by vector calculation.

1. Fuses 0.5 A gG / 0.5 A class CC.

3 wires with 2 CTs

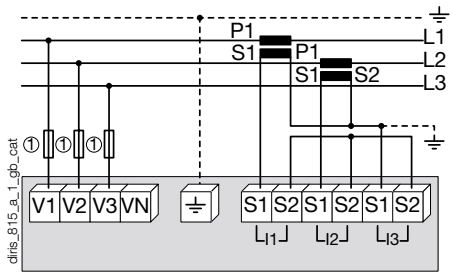

Use of 2 CTs reduces by 0.5% the accuracy of the phases, the current of which is worked out by vector calculation.

1. Fuses 0.5 A gG / 0.5 A class CC.

Additional information

Communication via RS485 link

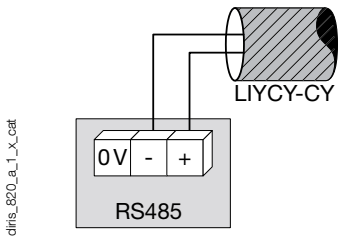

AC auxiliary power supply

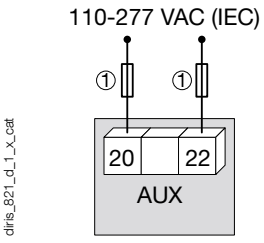

1. Fuses 0.5 A gG / 0.5 A class CC.

Terminals

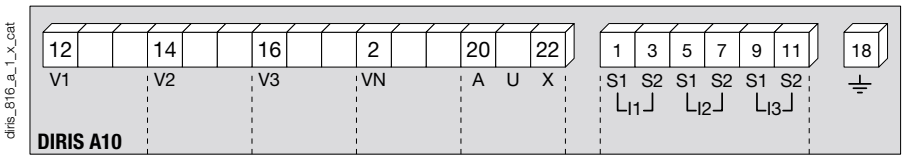

AUX: auxiliary power supply U_s.
V1, V2, V3 & VN: voltage inputs.

S1 - S2: current inputs.

Communication terminals

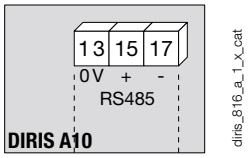

RS485 link.

Pulse or alarm output terminals

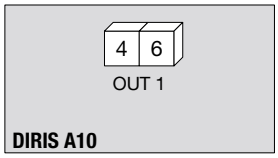

4 - 6: output n°1

Input terminals

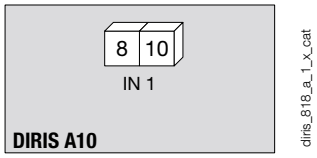

8 - 10: input n°1

References

Basic device **Description**		**DIRIS A10** **Reference**
DIRIS A10 (available in light grey on request)		4825 **0010**
DIRIS A10 with RS485 MODBUS communication (available in light grey on request)		4825 **0011**
Description of accessories	**To be ordered in multiples of**	**Reference**
Fuse disconnect switches for the protection of voltage inputs (type RM) 3 poles	4	5601 **0018**
Fuse disconnect switches for the protection of the auxiliary supply (type RM) 1 pole + neutral	6	5601 **0017**
Fuses type gG 10x38 0.5 A	10	6012 **0000**
Current transformer range	1	See page 98
Management software for DIRIS		See page 72



DIRIS A17

Multifunction meters - MFM

Multi-measurement meter - dimensions 72 x 72 mm

new



DIRIS A17

The solution for

- Industry.
- Infrastructure.
- Non critical buildings.



Strong points

- Compact.
- Compliant with IEC 61557-12.
- Advanced functions.
- Easy to use.

Conformity to standards

- IEC 61557-12
- IEC 62053-21 class 1
- IEC 62053-23 class 2

Management software

- To get the most effective use from your Socomec measurement and metering devices, we offer a range of dedicated software tools. See page 72.

Function

Compact and ergonomic, the **DIRIS A17** is a multifunction meter specially adapted for monitoring and managing electrical energy. Its communication function allows the analysis of data collected via a PLC or Vertelis energy management software.

Advantages

Compact

The compact 72 x 72 mm panel-mount format enables easy integration into any type of electrical cabinet, including MCCs (Motor Control Centres).

Compliant with IEC 61557-12

IEC 61557-12 is a high-level standard for all PMDs (Performance Monitoring Devices) that are designed to measure and monitor electrical parameters in distribution networks.

Compliance with IEC 61557-12 ensures a high level of equipment performance, in terms of metrology, and the mechanical and environmental aspects (EMC, temperature, etc.).

Advanced functions

The DIRIS A17 includes a programmable input and output as standard on all versions; input/output functions include pulse metering, alarm report and pulse output.

An RS485 MODBUS communication output is supplied on two versions, allowing the extraction of data and device configuration remotely.

Principle diagram

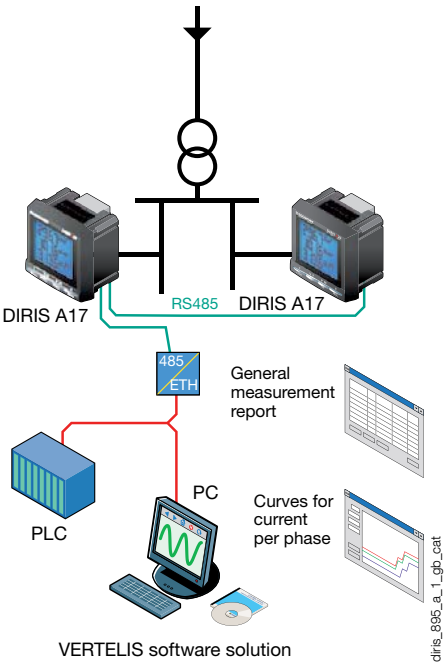

Easy to use

As well as being compact, the DIRIS A17 also allows easy navigation via its 4 direct access keys. Its screen displays a large amount of information, whilst remaining easy to read.

Functions

Multi-measurement

- Currents
  - instantaneous: I1, I2, I3, In
  - maximum average: I1, I2, I3, In
- Voltages & frequency
  - instantaneous: U1, U2, U3, U12, U23, U31, F
- Power
  - instantaneous: 3P, ΣP, 3Q, ΣQ, 3S, ΣS
  - maximum average: ΣP, ΣQ, ΣS
- Power factors
  - instantaneous: 3PF, ΣPF

Metering

- Active energy: +/- kWh
- Reactive energy: +/- kvarh

Harmonic analysis

- Total harmonic distortion (level 31)
  - Currents: thd I1, thd I2, thd I3, thd In
  - Phase-to-neutral voltage: thd U1, thd U2, thd U3, (4 wire networks)
  - Phase-to-phase voltage: thd U12, thd U23, thd U31, (3 wire networks)

Events

Alarms on all electrical values

Communications

Digital RS485 (MODBUS)

Input

- Pulse metering
- Remote device status

Output

- Remote command of device
- Alarm report
- Pulse report

socomec Innovative Power Solutions

Front panel



1. Backlit LCD display.
2. Direct access key for currents (instantaneous and maximum), current THD and test function.
3. Direct access key for voltages, frequency and voltage THD.
4. Pushbutton for active, reactive and apparent power (instantaneous and maximum) and power factor.
5. Direct access key for energies and programming menu access.

Case

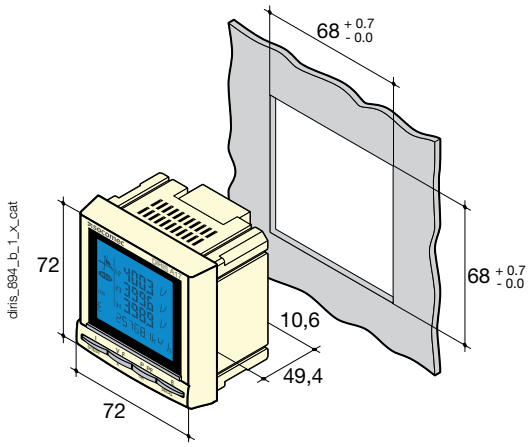

Type	Panel mounting
Dimensions W x H x D	72 x 72 x 60 mm
Case degree of protection	IP30
Front degree of protection	IP52
Display type	backlit LCD display
Terminal block type	Fixed or plug-in
Voltage and other connection cross-section	0.2 … 2.5 mm^2
Current connection cross-section	0.5 … 6 mm^2
Weight	400 g

Accessories

Current transformers
(see page 98)

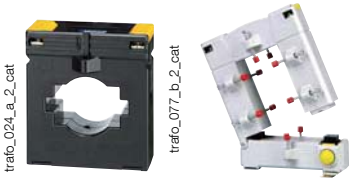

DIRIS A17

Multifunction meters - MFM

Multi-measurement meter - dimensions 72 x 72 mm

Electrical characteristics

Current measurement (TRMS)	
Via CT primary	9 999 A
Via CT secondary	1 or 5 A
Measurement range	0 … 11 kA
Input consumption	0.6 VA
Measurement updating period	1 s
Accuracy	0.5 %
Permanent overload	6 A
Intermittent overload	10 I_n for 1 s
Voltage measurements (TRMS)	
Direct measurement between phases	86 … 520 VAC
Direct measurement between phase and neutral	50 … 300 VAC
Input consumption	≤ 0.1 VA
Measurement updating period	1 s
Accuracy	0.5 %
Permanent overload	800 VAC
Power measurement	
Measurement updating period	1 s
Accuracy	1 %
Power factor measurement	
Measurement updating period	1 s
Accuracy	0.5 %
Frequency measurement	
Measurement range	45 … 65 Hz
Measurement updating period	1 s
Accuracy	0.1 %
Energy accuracy	
Active (according to IEC 62053-21)	Class 1
Reactive (according to IEC 62053-23)	Class 2

Operating conditions	
Operating temperature	- 10 … + 55 °C
Storage temperature	- 20 … + 85 °C
Relative humidity	95 %
Auxiliary power supply	
Alternating voltage	220 … 277 VAC
AC tolerance	± 15 %
Frequency	50 / 60 Hz
Consumption	3 VA
Digital pulse and control input	
Number	1
Type	optocoupler 8 to 30 VDC
Minimum signal width	10 ms
Minimum duration between 2 pulses	18 ms
Communication	
Link	RS485
Type	2 … 3 half duplex wires
Protocol	MODBUS® RTU
MODBUS® speed	1200 … 38400 bauds
Pulse, alarm and control output	
Number	1
Power supply	8 to 30 VDC
Minimum signal width	10 ms
Minimum duration between 2 pulses	18 ms
Type of optocoupler	IEC 62053-31 Class A (5 ... 30 VDC)
Pulse weight	100 Wh,1 kWh, 10 kWh, 100 kWh, 1000 kWh, 10000 kWh
Pulse length	100 ms, 200 ms, 300 ms, ..., 900 ms

Terminals

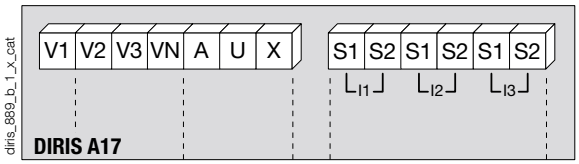

S1 - S2: current inputs.

AUX: auxiliary power supply U_s.
V1, V2, V3 & VN: voltage inputs.

Communication

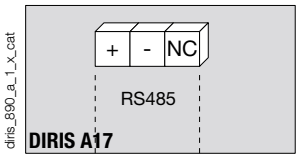

Input/output

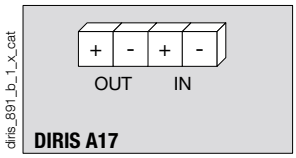

18 - 19: output

Connection

Recommendation:

- For IT earthing systems, it is recommended that the CT secondary is not connected to earth.
- When disconnecting the DIRIS, the secondary of each current transformer must be short-circuited.
  This operation can be carried out automatically by a SOCOMEC PTI, an accessory which is included in this catalogue. Please consult us.

Low voltage balanced network

3/4 wires with 1 CT

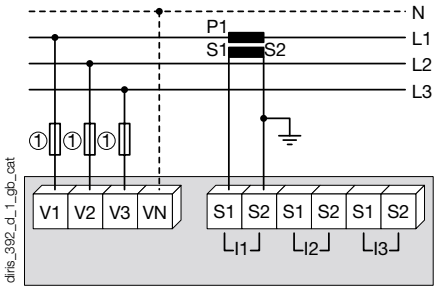

Use of 1 CT reduces by 0.5% the accuracy of the phases, the current of which is worked out by vector calculation.

1. Fuses 0.5 A gG / 0.5 A class CC.

socomec Innovative Power Solutions

Low voltage unbalanced network

3/4 wires with 3 CTs

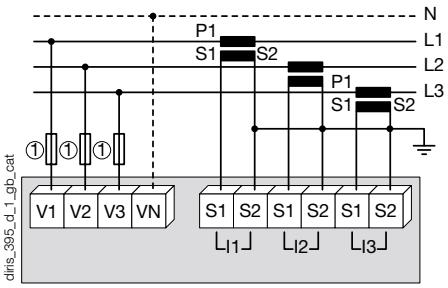

1. Fuses 0.5 A gG / 0.5 A class CC.

3 wires with 2 CTs

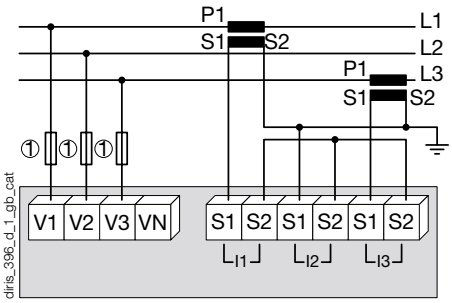

Use of 2 CTs reduces by 0.5% the accuracy of the phases, the current of which is worked out by vector calculation.

1. Fuses 0.5 A gG / 0.5 A class CC.

3 wires with 2 CTs

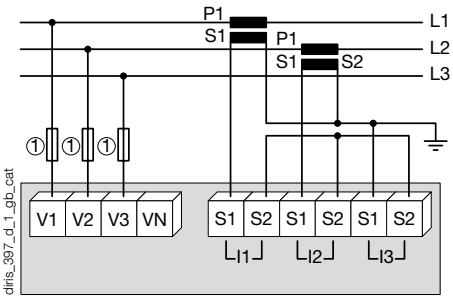

Use of 2 CTs reduces by 0.5% the accuracy of the phases, the current of which is worked out by vector calculation.

1. Fuses 0.5 A gG / 0.5 A class CC.

Additional information

Communication via RS485 link

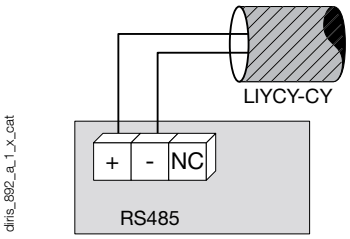

AC auxiliary power supply

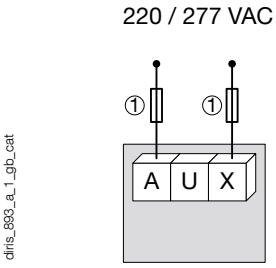

1. Fuses 0.5 A gG / 0.5 A class CC.

References

Basic device **Auxiliary power supply U_s**		**DIRIS A17** **Reference**
220 ... 277 VAC with pulse output		4825 **0101**
220 ... 277 VAC with RS485 MODBUS communication		4825 **0102**
220 ... 277 VAC with RS485 MODBUS communication		4825 **0103**
Accessories		
Description of accessories	**To be ordered in multiples of**	**Reference**
Fuse disconnect switches for the protection of voltage inputs (type RM) 3 poles	4	5601 **0018**
Fuse disconnect switches for the protection of the auxiliary supply (type RM) 1 pole + neutral	6	5601 **0017**
Fuses type gG 10x38 0.5 A	10	6012 **0000**
Current transformer range	1	See page 98
Management software for DIRIS		See page 72



DIRIS A20

Multifunction meters - MFM

Multi-measurement meter - dimensions 96 x 96 mm



DIRIS A20

The solution for

- Industry.
- Infrastructure.
- Data centres.



Strong points

- Easy to use.
- Compliant with IEC 61557-12
- Detects wiring errors.

Conformity to standards

- IEC 61557-12
- IEC 62053-22 class 0.5S
- IEC 62053-23 class 2

Management software

- To get the most effective use from your Socomec measurement and metering devices, we offer a range of dedicated software tools. See page 72.

Function

DIRIS A20 are panel mounted measurement units which ensure the user has access to all the measurements required for successfully carrying out energy efficiency projects and ensuring the electrical distribution is monitored.

All this information can be analysed remotely using the VERTELIS software solution.

Principle diagram

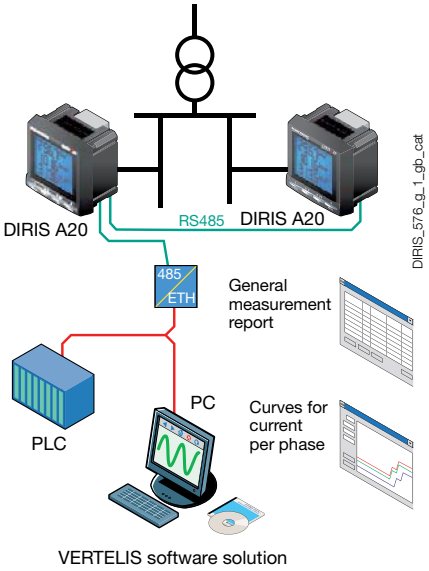

Advantages

Easy to use

Thanks to its large backlit LCD display and its multiple viewing screens with direct pushbutton access, DIRIS A20 provide clear readings and are easy to use.

They directly display a number of multi-measurement and metering values : + kWh, + kvarh, I, U, V, F, P, Q, S, PF, etc.

Compliant with IEC 61557-12

IEC 61557-12 is a high-level standard for all PMDs (Performance Monitoring Devices) that are designed to measure and monitor electrical parameters in distribution networks.

Compliance with IEC 61557-12 ensures a high level of equipment performance, in terms of metrology, and the mechanical and environmental aspects (EMC, temperature, etc.).

Detects wiring errors

An integrated test function can be utilised to detect incorrect wiring and to automatically correct CT installation errors.

Functions

Multi-measurement
- Currents
  - instantaneous: I1, I2, I3, In
  - maximum average: I1, I2, I3, In
- Voltages & frequency
  - instantaneous: U1, U2, U3, U12, U23, U31, F
- Power
  - instantaneous: 3P, ΣP, 3Q, ΣQ, 3S, ΣS
  - maximum average: ΣP, ΣQ, ΣS
- Power factors
  - instantaneous: 3PF, Σ

Metering
- Active energy: + kWh
- Reactive energy: + kvarh
- Hours:

Harmonic analysis
- Total harmonic distortion (level 51)
  - Currents: thd I1, thd I2, thd I3
  - Phase-to-neutral voltage: thd U1, thd U2, thd U3
  - Phase-to-phase voltage: thd U12, thd U23, thd U31

Events

Alarms on all electrical values

Communications(1)

RS485 with MODBUS protocol

Output
- Remote command of device
- Alarm report
- Pulse report

(1) Available as an option (see the following pages).

socomec Innovative Power Solutions

Front panel



1. Backlit LCD display.
2. Direct access key for currents (instantaneous and max. values), current THD and test function.
3. Direct access key for voltages, frequency and voltage THD.
4. Pushbutton for active, reactive, and apparent power (instantaneous and max. values) and power factor.
5. Direct access key for energies, hour meter and programming menu.

Case

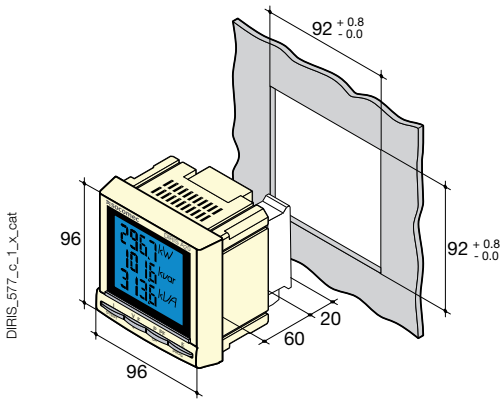

Type	panel mounting
Dimensions W x H x D	96 x 96 x 60 mm
Case degree of protection	IP30
Front degree of protection	IP52
Display type	backlit LCD display
Terminal block type	Fixed or plug-in
Voltage and other connection cross-section	0.2 … 2.5 mm^2
Current connection cross-section	0.5 … 6 mm^2
Weight	400 g

Plug-in modules

DIRIS® A20





1 Output

1 output assignable to:

- Pulses: configurable (type, weight, duration) in kWh or kvarh.
- Monitoring: 3I, In, 3V, 3U, F, ΣP, ΣQ, ΣS, ΣPFL/C, THD 3I, THD 3V, THD 3U and timer.
- Remote command of device.



Communication

RS485 link with JBUS / MODBUS protocol (speed up to 38400 bauds)

Accessories

Current transformers
(see page 98)

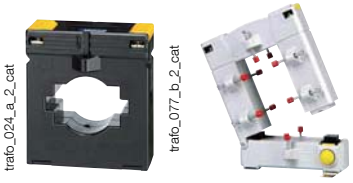

IP65 protection



Panel mounting kit
for a 144 x 96 mm cut-out



DIRIS A20

Multifunction meters - MFM

Multi-measurement meter - dimensions 96 x 96 mm

Electrical characteristics

Current measurement on high-impedance inputs (TRMS)	
Via CT primary	9 999 A
Via CT secondary	5 A
Measurement range	0 … 11 kA
Input consumption	0.6 VA
Measurement updating period	1 s
Accuracy	0.2 %
Permanent overload	6 A
Intermittent overload	10 I_n for 1 s
Voltage measurements (TRMS)	
Direct measurement between phases	50 … 500 VAC
Direct measurement between phase and neutral	28 … 289 VAC
Input consumption	≤ 0.1 VA
Measurement updating period	1 s
Accuracy	0.2 %
Permanent overload	800 VAC
Power measurement	
Measurement updating period	1 s
Accuracy	0.5 %
Power factor measurement	
Measurement updating period	1 s
Accuracy	0.5 %
Frequency measurement	
Measurement range	45 … 65 Hz
Measurement updating period	1 s
Accuracy	0.1 %

Energy accuracy	
Active (according to IEC 62053-22)	Class 0.5 S
Reactive (according to IEC 62053-23)	Class 2
Auxiliary power supply	
Alternating voltage	110 … 400 VAC
AC tolerance	± 10 %
Direct voltage	120 … 350 VDC
DC tolerance	± 20 %
Frequency	50 / 60 Hz
Consumption	10 VA
Pulse or alarm output	
Number	1
Type	100 VDC - 0.5 A - 10 VA
Max. number of operations	≤ 10^8
Communication	
Link	RS485
Type	2 … 3 half duplex wires
Protocol	MODBUS RTU
MODBUS® speed	1400 … 38400 bauds
Operating conditions	
Operating temperature	- 10 … + 55 °C
Storage temperature	- 20 … + 85 °C
Relative humidity	95 %

Terminals

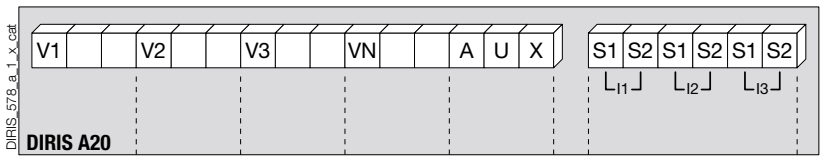

S1 - S2: current inputs.

AUX: auxiliary power supply U_s.
V1, V2, V3 & VN: voltage inputs.

Communication module

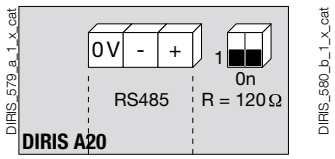

RS485 link.
R = 120 Ω: selectable internal resistance for RS485 end of line termination.

Output or alarm module

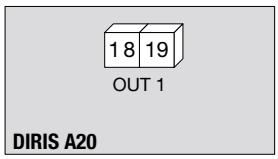

18 - 19: output n°1

Connection

Recommendation:

- For IT earthing systems, it is recommended that the CT secondary is not connected to earth.
- When disconnecting the DIRIS, the secondary of each current transformer must be short-circuited. This operation can be carried out automatically by a SOCOMEC PTI, an accessory which is included in this catalogue. Please consult us.

Low voltage balanced network

3/4 wires with 1 CT

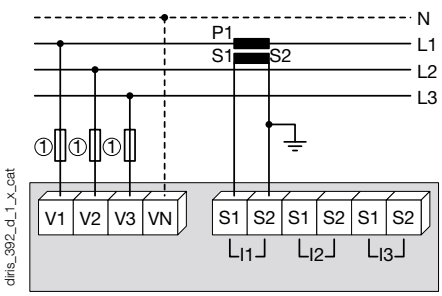

Use of 1 CT reduces by 0.5% the accuracy of the phases, the current of which is worked out by vector calculation.
1. Fuses 0.5 A gG / 0.5 A class CC.

Single-phase

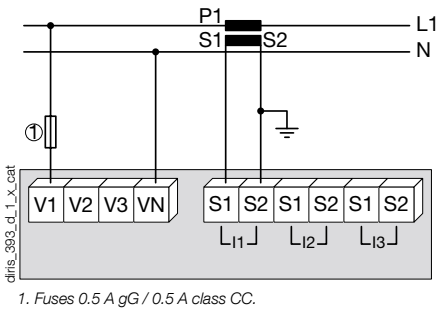

1. Fuses 0.5 A gG / 0.5 A class CC.

Two-phase

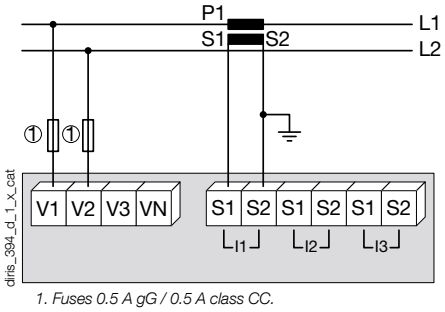

1. Fuses 0.5 A gG / 0.5 A class CC.

socomec Innovative Power Solutions

Low voltage unbalanced network

3/4 wires with 3 CTs

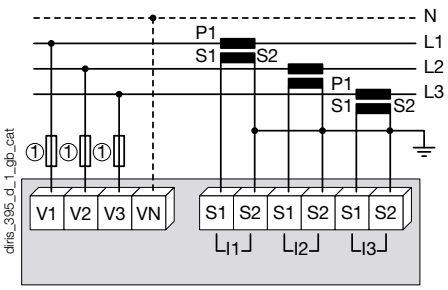

1. Fuses 0.5 A gG / 0.5 A class CC.

3 wires with 2 CTs

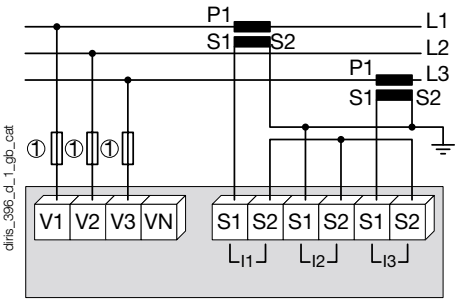

Use of 2 CTs reduces by 0.5% the accuracy of the phases, the current of which is worked out by vector calculation.

1. Fuses 0.5 A gG / 0.5 A class CC.

3 wires with 2 CTs

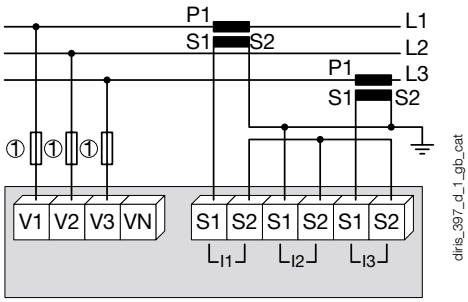

Use of 2 CTs reduces by 0.5% the accuracy of the phases, the current of which is worked out by vector calculation.

1. Fuses 0.5 A gG / 0.5 A class CC.

Additional information

Communication via RS485 link

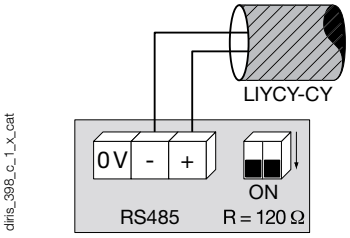

AC & DC auxiliary power supply

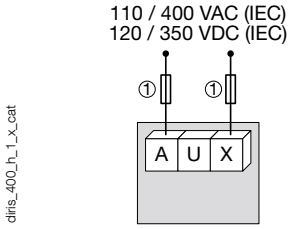

1. Fuses 0.5 A gG / 0.5 A class CC.

References

Basic device **Auxiliary power supply U_s**		**DIRIS A20** **Reference**
110 … 400 VAC / 180 … 350 VDC		4825 **0200**
Optional plug-in modules		**Reference**
1 output		4825 **0080**
RS485 MODBUS® communication		4825 **0082**
Accessories		
Description of accessories	**To be ordered in multiples of**	**Reference**
IP65 protection	1	4825 **0089**
Panel mounting kit for a 144 x 96 mm cut-out	1	4825 **0088**
Fuse disconnect switches for the protection of voltage inputs (type RM) 3 poles	4	5601 **0018**
Fuse disconnect switches for the protection of the auxiliary supply (type RM) 1 pole + neutral	6	5601 **0017**
Fuse type gG 10x38 0.5 A	10	6012 **0000**
Ferrite to be associated with communication modules	1	4899 **0011**
Current transformer range	1	See page 98
Management software for DIRIS		See page 72



DIRIS A40/A41

Multifunction meters - PMD

Multi-measurement meter - dimensions 96 x 96 mm



DIRIS A41

The solution for

- Industry.
- Data centres.
- Infrastructures.



Function

DIRIS A40 and **A41** are panel mounted measurement units which ensure the user has access to all the measurements required for successfully carrying out energy efficiency projects and ensuring the electrical distribution is monitored.

All this information can be analysed remotely using the VERTELIS software solution.

The DIRIS A41 has a CT current input for measuring the neutral current.

Principle diagram

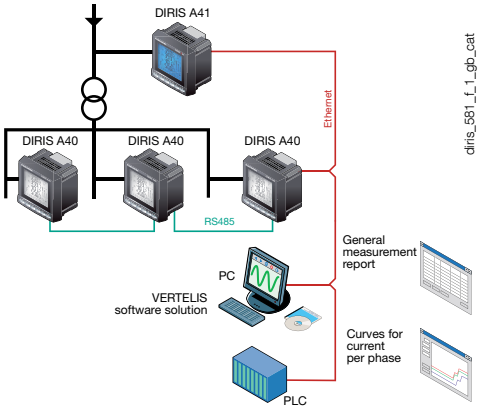

Strong points

- Easy to use.
- Detects wiring errors.
- Customisable.
- Webserver function.
- Compliant with IEC 61557-12.

Conformity to standards

- IEC 61557-12
- IEC 62053-22 class 0.5S
- IEC 62053-23 class 2

Advantages

Easy to use

Thanks to its large backlit LCD display and its multiple viewing screens with direct pushbutton access, DIRIS A4x provide clear readings and are easy to use.

They directly display a number of multi-measurement and metering values : +/- kWh, +/- kvarh, kVAh, I, U, V, F, P, Q, S, PF, etc.

Detects wiring errors

An integrated test function can be utilised to detect incorrect wiring and to automatically correct CT installation errors.

Customisable

Thanks to the wide range of optional modules, the product can be customised or upgraded after installation.

Webserver function

Optional Ethernet communication modules include a Webserver function for monitoring and exploiting data remotely without additional software.

Compliant with IEC 61557-12

IEC 61557-12 is a high-level standard for all PMDs (Performance Monitoring Devices) that are designed to measure and monitor electrical parameters in distribution networks.

Compliance with IEC 61557-12 ensures a high level of equipment performance, in terms of metrology, and the mechanical and environmental aspects (EMC, temperature, etc.).

Functions

Multi-measurement

- Currents
  - instantaneous: I1, I2, I3, In, Isystem
  - average/maximum average: I1, I2, I3, In
- Voltages & frequency
  - instantaneous: U1, U2, U3, U12, U23, U31, F, Vsystem, Usystem
  - average/maximum average: U1, U2, U3, U12, U23, U31, F
- Power
  - instantaneous: 3P, ΣP, 3Q, ΣQ, 3S, ΣS
  - maximum average: ΣP, ΣQ, ΣS
  - predictive: (ΣP), (ΣQ), (ΣS)
- Power factors
  - instantaneous: 3PF, ΣPF
  - average/maximum average: ΣPF
- Temperatures(1)
  - internal
  - external via 3 PT100 sensors

Metering

- Active energy: +/- kWh
- Reactive energy: +/- kvarh
- Apparent power: kVAh
- Hours:

Harmonic analysis

- Total harmonic distortion
  - Currents: thd I1, thd I2, thd I3, thd In
  - Phase-to-neutral voltage: thd U1, thd U2, thd U3
  - Phase-to-phase voltage: thd U12, thd U23, thd U31
- Individual up to level 63
  - Currents: HI1, HI2, HI3, HIn
  - Phase-to-neutral voltage: HU1, HU2, HU3,
  - Phase-to-phase voltage: HU12, HU23, HU31

Load curves(1)

- Active and reactive power: ΣP+/- ; ΣQ+/-
- Voltages & frequency: U1, U2, U3, U12, U23, U31, F

Events(1)

- Alarms on all electrical values.

Communications(1)

- RS485 MODBUS RTU & PROFIBUS DP
- Ethernet (MODBUS TCP or RTU over TCP and Web server)
- Ethernet with RS485 gateway MODBUS RTU over TCP

Inputs / Outputs (1)

- Pulse metering
- Remote control/command
- Alarm report
- Pulse report

Analogue output

- 0/4- 20 mA analogue output

(1) Available as an option (see the following pages).

socomec Innovative Power Solutions

Front panel



1. Backlit LCD display.
2. Direct access key for currents and test function.
3. Direct access key for voltages and frequency.
4. Direct access key for active, reactive, and apparent powers and power factor.
5. Direct access key for maximum and average current and power values.
6. Direct access key for harmonic values.
7. Direct access key for energies, hour meter and programming menu.

Plug-in modules

DIRIS® A40



DIRIS® A41*



** with a factory fitted neutral CT module.*



Pulse outputs

2 configurable pulse outputs (type, weight and duration) on ± kWh, ±kvarh and kVAh.



Communication MODBUS®

RS485 link with MODBUS® protocol (speed up to 38400 bauds).



PROFIBUS® DP communication

SUB-D9 link with PROFIBUS® DP protocol (speed up to 12 Mbauds).



Ethernet communication

- Ethernet connection with MODBUS TCP or MODBUS RTU over TCP protocol.
- Embedded Webserver function (1).



Ethernet communication with RS485 MODBUS gateway

- Ethernet connection with MODBUS TCP or MODBUS RTU over TCP protocol.
- Connection of 1 to 247 RS485 MODBUS slaves.
- Embedded Webserver function (1).



Analogue outputs

A maximum of 2 modules may be connected, providing up to 4 analogue outputs.

Per module 2 outputs assignable to:

3I, In, 3V, 3U, F, ± ΣP, ± ΣQ, ΣS, ΣPFL/C, I sys, Vsys, Usys, Ppred, Q pred, Spred, T°C internal, T°C 1, T°C 2, T°C3 and to 17 VDC power supply.



2 inputs - 2 outputs

A maximum of 3 modules may be connected, providing up to 6 inputs and 6 outputs.

Per module 2 outputs assignable to:

- monitoring: 3I, In, 3V, 3U, F, ±ΣP, ±ΣQ, SS, ΣPFL/C, THD 3I, THD In, THD 3V, THD 3U, Ppred, Qpred, Spred, internal T°C, T°C 1, T°C2, T°C3 and hour meter,
- remote control,
- timed remote control.



Memory

- Storing up to a maximum of 62 days of P+, P-, Q+, Q- with an internal or external synchronisation signal of 5, 8, 10, 15, 20, 30 and 60 minutes.
- Storing of 10 hour-dated last alarms.
- Storing of the last minimum and maximum instantaneous values for 3U, 3V, 3I, In, F, ΣP±, ΣQ±, ΣS, THD 3U, THD 3V, THD, 3U, THD, 3V, THD, 3I, THD In.
- Storing of 3U, 3V and F average values based on synchronisation function (maximum 60 days).



Temperature(2)

Temperature indication:

- internal,
- external sensor PT 100 (T°C 1),
- external sensor PT 100 (T°C 2),
- external sensor PT 100 (T°C 3),.

(1) See "Management software for DIRIS" p. 72.

(2) See "external sensor PT 100" p. 61.

DIRIS A40/A41

Multifunction meters - PMD

Multi-measurement meter - dimensions 96 x 96 mm

Accessories

Current transformers
(see page 98)

trafo_024_a_2_cat



trafo_077_b_2_cat



IP65 protection

diris_720_a_2_cat



Panel mounting kit for a 144 x 96 mm cut-out

diris_718_b_1_cat



Terminals

DIRIS A40

diris_569_a_1_x_cat

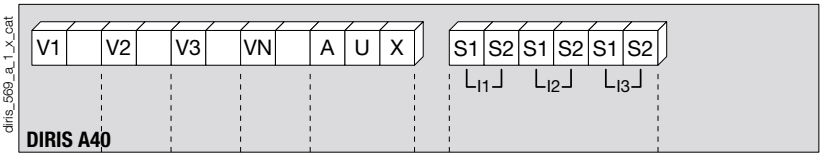

S1 - S2: current inputs

AUX: auxiliary power supplies U_s
V1 - V2 - V3 - VN: voltage inputs

DIRIS A41

diris_570_a_1_x_cat

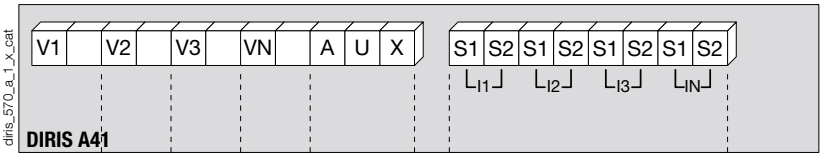

S1 - S2: current inputs

AUX: auxiliary power supplies U_s
V1 - V2 - V3 - VN: voltage inputs

Communication module

diris_571_a_1_x_cat

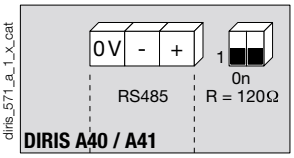

RS485 link.
R = 120 Ω: selectable internal resistance for RS485 end of line termination.

Pulse output module

diris_572_a_1_x_cat

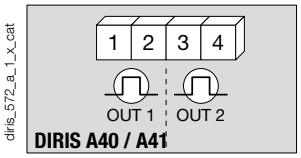

1 - 2: pulse output n°1.
3 - 4: pulse output n°2.

Analogue output module

diris_573_a_1_x_cat

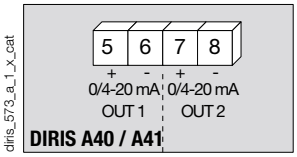

5 - 6: analogue output n°1.
7 - 8: analogue output n°2.

2 inputs / 2 outputs module

diris_574_b_1_x_cat

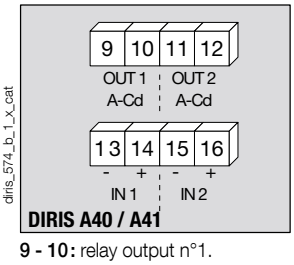

9 - 10: relay output n°1.
11 - 12: relay output n°2.
13 - 14: opto input n°1.
15 - 16: opto input n°2.

Memory module

diris_683_a_1_x_cat

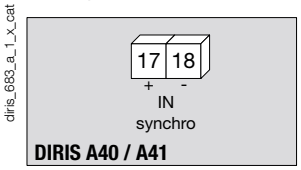

17 - 18: synchronisation input.

Temperature module

diris_753_a_1_gb_cat

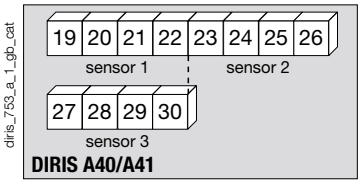

Sensor 1	Sensor 2	Sensor 3
19: red	**23:** red	**27:** red
20: red	**24:** red	**28:** red
21: white	**25:** white	**29:** white
22: white	**26:** white	**30:** white

Ethernet Module

diris_752_a_1_x_cat

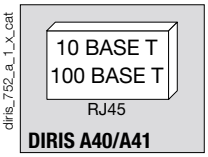

Ethernet module + RS485 MODBUS gateway

diris_751_c_1_gb_cat

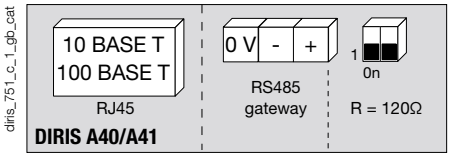

socomec
Innovative Power Solutions

Electrical characteristics

Current measurement on insulated inputs (TRMS)	
Via CT primary	9 999 A
Via CT secondary	1 or 5 A
Measurement range	0 … 11 kA
Input consumption	≤ 0.1 VA
Measurement updating period	1 s
Accuracy	0.2 %
Permanent overload	6 A
Intermittent overload	10 I_n for 1 s
Voltage measurements (TRMS)	
Direct measurement between phases	50 … 700 VAC
Direct measurement between phase and neutral	28 … 404 VAC
VT primary	500 000 VAC
VT secondary	60, 100, 110, 173, 190 VAC
Frequency	50 / 60 Hz
Input consumption	≤ 0.1 VA
Measurement updating period	1 s
Accuracy	0.2 %
Permanent overload	760 VAC
Current-voltage product	
Limitation for 1A CT	10 000 000
Limitation for 5A CT	10 000 000
Power measurement	
Measurement updating period	1 s
Accuracy	0.5 %
Power factor measurement	
Measurement updating period	1 s
Accuracy	0.5 %
Frequency measurement	
Measurement range	45 … 65 Hz
Measurement updating period	1 s
Accuracy	0.1 %
Energy accuracy	
Active (according to IEC 62053-22)	Class 0.5 S
Reactive (according to IEC 62053-23)	Class 2
Auxiliary power supply	
Alternating voltage	110 … 400 VAC
AC tolerance	± 10 %
Direct voltage	120 … 350 VDC / 12 … 48 VDC
DC tolerance	± 20 % / - 6 … + 20 %
Frequency	50 / 60 Hz
Consumption	≤ 10 VA

2 inputs / 2 outputs module: Outputs (alarms / control)	
Number of relays	2(1)
Type	250 VAC - 5 A - 1150 VA
2 inputs / 2 outputs module: Phototransistor inputs	
Number	2(1)
Power supply	10 … 30 VDC
Minimum signal width	10 ms
Minimum duration between 2 pulses	18 ms
Type	phototransistors
Pulse output module	
Number of relays	2
Type	100 VDC - 0.5 A - 10 VA
Max. number of operations	≤ 10^8
Analogue output module	
Number of outputs	2(2)
Type	insulated
Range	0 / 4 … 20 mA
Load resistance	600 Ω
Maximum current	30 mA
MODBUS communication module	
Link	RS485
Type	2 … 3 half duplex wires
Protocol	MODBUS RTU
MODBUS® speed	4800 … 38400 bauds
PROFIBUS-DP communication module	
Link	SUB-D9
Protocol	PROFIBUS® DP
PROFIBUS® speed	9.8 kbauds … 12 Mbauds
Ethernet communication module	
Connection	RJ45
Speed	10 base T / 100 base T
Protocol	MODBUS TCP or MODBUS RTU over TCP
Temperature module (inputs)	
Type	PT100
Connection	2, 3 or 4 wires
Dynamic	- 20 °C ... 150 °C
Accuracy	+/- 1 digit
Maximum length	300 cm
Operating conditions	
Operating temperature	- 10 … + 55 °C
Storage temperature	- 20 … + 85 °C
Relative humidity	95 %

(1) Max. 3 modules / DIRIS.
(2) Max. 2 modules / DIRIS.

Case

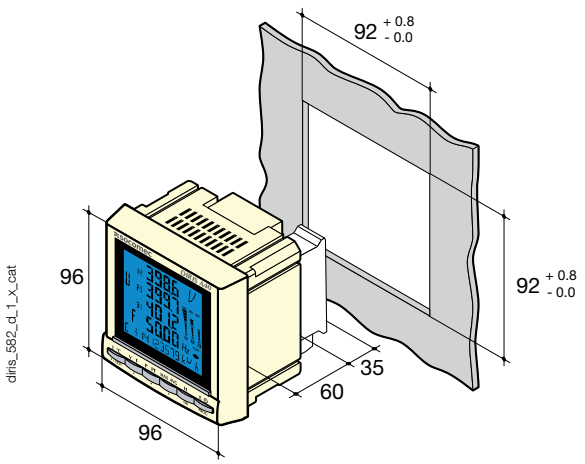

Type	panel mounting
Dimensions W x H x D	96 x 96 x 60 mm
Case degree of protection	IP30
Front degree of protection	IP52
Display type	backlit LCD display
Terminal blocks type	fixed or plug-in
Voltage and other connection cross-section	0.2 … 2.5 mm^2
Current connection cross-section	0.5 … 6 mm^2
Weight	400 g

Connections

Recommendation: When disconnecting the DIRIS, the secondary of each current transformer must be short-circuited. This operation can be carried out automatically by a SOCOMEC PTI, an accessory which is included in this catalogue. Please consult us.
In TNC neutral systems it is recommended to use the functional earth module.

Low voltage balanced network for DIRIS A40

3/4 wires with 1 CT

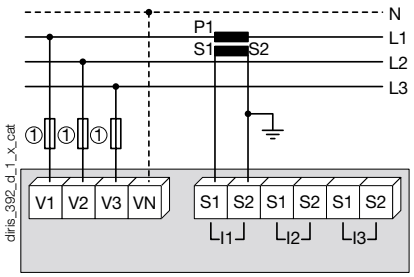

Use of 1 CT reduces by 0.5% the accuracy of the phases, the current of which is worked out by vector calculation.

1. Fuses 0.5 A gG / 0.5 A class CC.

Single-phase

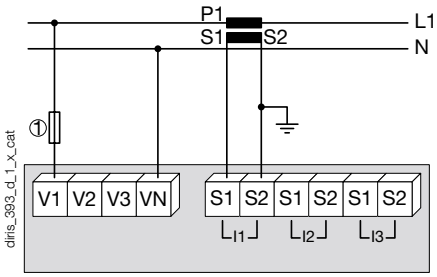

1. Fuses 0.5 A gG / 0.5 A class CC.

Two-phase

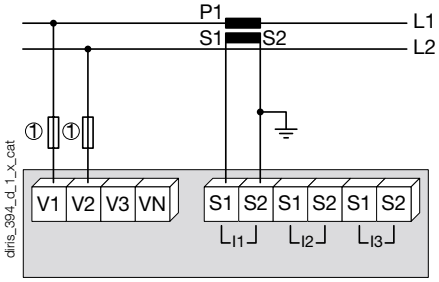

1. Fuses 0.5 A gG / 0.5 A class CC.

Low voltage unbalanced network for DIRIS A40

3/4 wires with 3 CTs

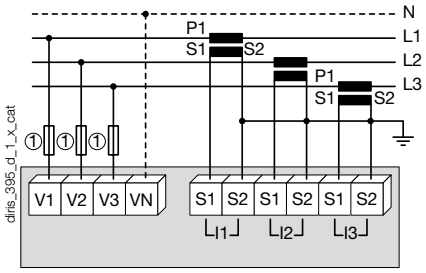

1. Fuses 0.5 A gG / 0.5 A class CC.

3 wires with 2 CTs

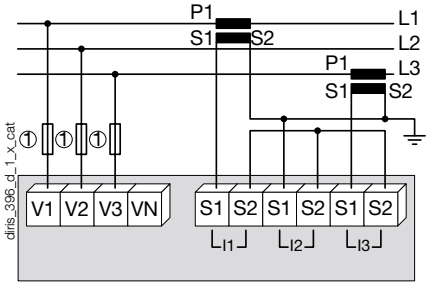

Use of 2 CTs reduces by 0.5% the accuracy of the phases, the current of which is worked out by vector calculation.

1. Fuses 0.5 A gG / 0.5 A class CC.

3 wires with 2 CTs

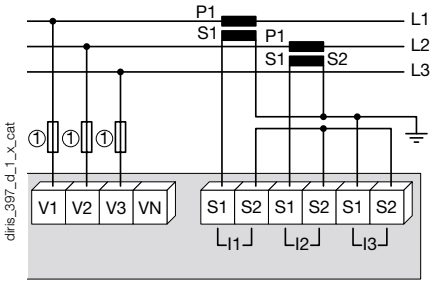

Use of 2 CTs reduces by 0.5% the accuracy of the phases, the current of which is worked out by vector calculation.

1. Fuses 0.5 A gG / 0.5 A class CC.

Low voltage unbalanced network for DIRIS A41

4 wires with 4 CTs

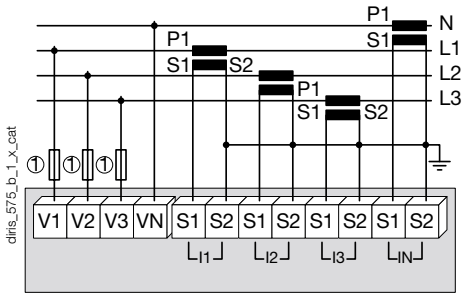

1. Fuses 0.5 A gG / 0.5 A class CC.

Additional information

Communication via RS485 link

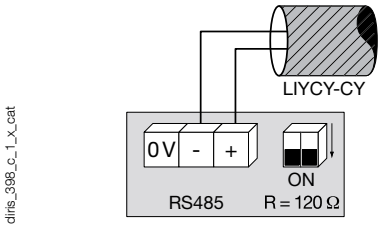

Connection of voltage transformer for HV networks

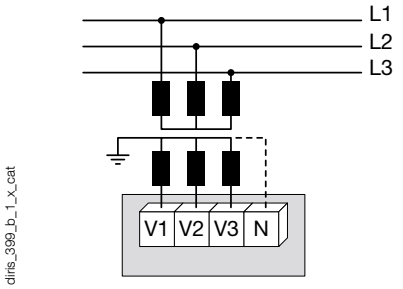

AC & DC auxiliary power supply

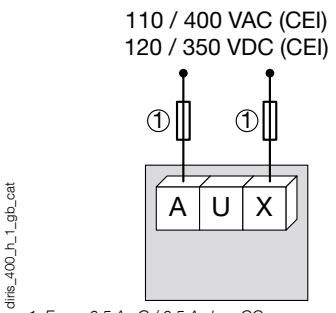

1. Fuses 0.5 A gG / 0.5 A class CC.

References

Basic device	DIRIS A40		DIRIS A41 with CT on the neutral
Auxiliary power supply U_s	**Reference**		**Reference**
110 ... 400 VAC / 120 ... 350 VDC	4825 **0201**		4825 **0202**
12 ... 48 VDC	4825 **1201**		4825 **1202**

Options **Plug-in modules**[1]	**Reference**		**Reference**
Pulse outputs	4825 **0090**		4825 **0090**
RS485 MODBUS® communication	4825 **0092**		4825 **0092**
Analogue outputs	4825 **0093**		4825 **0093**
2 inputs / 2 outputs	4825 **0094**		4825 **0094**
Communication Sub D9 PROFIBUS®DP[2]	4825 **0205**		4825 **0205**
Memory	4825 **0097**		4825 **0097**
Embedded Webserver function [2].	4825 **0203**		4825 **0203**
Ethernet communication + RS485 MODBUS gateway (Embedded Webserver function)[2]	4825 **0204**		4825 **0204**
Temperature inputs	4825 **0206**		4825 **0206**

(1) Ease of integration for additional functions (maximum 4 slots on A40 and 3 on A41).
(2) Dimension of the plug-in module: 2 slots.

Accessories **Description of accessories**	**To be ordered in multiples of**	**Reference**	**To be ordered in multiples of**	**Reference**
IP65 protection	1	4825 **0089**	1	4825 **0089**
Panel mounting kit for a 144 x 96 mm cut-out	1	4825 **0088**	1	4825 **0088**
Fuse disconnect switches for the protection of voltage inputs (type RM) 3 poles	4	5601 **0018**	4	5601 **0018**
Fuse disconnect switches for the protection of the auxiliary supply (type RM) 1 pole + neutral	6	5601 **0017**	6	5601 **0017**
Fuse type gG 10x38 0.5 A	10	6012 **0000**	10	6012 **0000**
Current transformer range	1	See page 98	1	See page 98
Ferrite to be associated with communication modules	1	4899 **0011**		4899 **0011**
Temperature sensor PT100 - M6 screw type	1	4825 **0208**	1	4825 **0208**
Temperature sensor PT100 - M6 eyelet type	1	4825 **0209**	1	4825 **0209**
Management software for DIRIS				See page 72



DIRIS A60

Multifunction meters - PMD

Energy monitoring and event analysis - Dimensions 96x96



DIRIS A60

Principle diagram

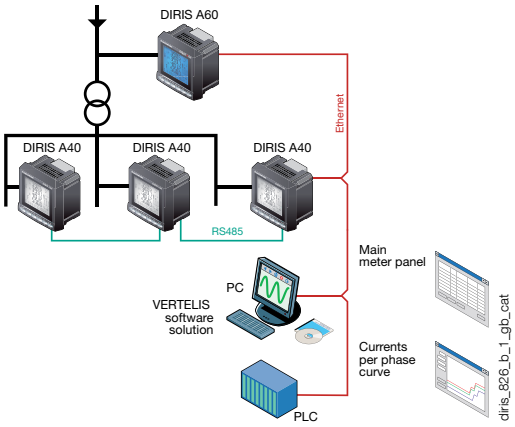

Function

DIRIS A60 is a measurement device which incorporates all functions of the DIRIS A40 which are enhanced by an event log of harmful events for the installation.

All this information can be used and analysed remotely using the free Analysis software that can be downloaded from the SOCOMEC website www.socomec.com.

Advantages

Easy to use

Thanks to its large backlit multi view display and its 4 direct access keys, the DIRIS A40 is really user-friendly.**Detects wiring errors**

The DIRIS 60 are provided with a function for correcting connection errors.

Compliant with IEC 61557-12

Standard IEC 61557-12 is a very precise reference and the common denominator of all PMDs (Performance Monitoring Devices), designed to measure and monitor electrical parameters in distribution networks.

Compliance with IEC 61557-12 ensures a high level of equipment performance, in terms of metrology, and the mechanical and environmental aspects (EMC, temperature, etc.).

Management softwares

- Optional Ethernet module with Webserver function: for monitoring and remotely use data without any specific software.
- Analysis software:for data analysis in order to improve the reliability of your electrical installation.
- Easy Config software:for easy and rapid setting of the DIRIS A60 onto a PC.

Conformity to standard EN50160

The method in which Measuring method of the electrical network voltage characteristics is compliant with the requirements by standard EN50160.

Voltage is compliant with standard EN50160.

The solution for

- Industry.
- Infrastructure.
- Data centers.



Strong points

- Easy to use.
- Detects wiring errors.
- Compliant with IEC 61557-12.
- Management softwares.
- Conformity to standard EN50160.

Conformity to standards

- IEC 61557-12
- IEC 62053-22 class 0.5S
- IEC 62053-23 class 2
- EN50160

Functionalities

In addition to the functions of the DIRIS A40, the DIRIS A60 also:

- shows the current and voltage unbalance
- shows the tangent φ
- stores the load curves (60 days with an interval of 10 minutes) for the active, reactive and apparent power: ΣP+/-; ΣQ+/-, ΣS
- detects and stores the last 40 events concerning:
  - overvoltage
  - voltage dips
  - cut-offs
  - overcurrent.

For each stored event, the DIRIS A60 records the relevant RMS 1/2 interval curves for the voltages V1, V2, V3, U12, U23, U31 and the currents I1, I2, I3, In, giving a total of 400 curves.

Other functions:

Multi-measurement

- Currents
  - instantaneous: I1, I2, I3, In, Isystem,
  - average/maximum average: I1, I2, I3, In,
  - unbalance: I unb.
- Voltages & frequency
  - instantaneous: U1, U2, U3, U12, U23, U31, F, Vsystem, Usystem
  - average/maximum average: U1, U2, U3, U12, U23, U31, F
  - unbalance: U unb.
- Power
  - instantaneous: 3P, ΣP, 3Q, ΣQ, 3S, ΣS
  - maximum average: ΣP, ΣQ, ΣS
  - predictive: ΣP, ΣQ, ΣS.
- Power factor - PF, ΣPF
- Instantaneous total tangent φ
- Instantaneous, average and max. average unbalance
- Temperatures(1)
  - internal,
  - external via 3 PT100 sensors

Metering

- Active energy: +/- kWh
- Reactive energy: +/- kvarh
- Apparent power: kVAh
- Hours:

Harmonic analysis (level 63)

- Total harmonic distortion
  - Currents: thd I1, thd I2, thd I3, thd In
  - Phase-to-neutral voltage: thd U1, thd U2, thd U3
  - Phase to phase voltage: thd U12, thd U23, thd U31
- Individual
  - Currents: HI1, HI2, HI3, HIn
  - Phase-to-neutral voltage: HU1, HU2, HU3,
  - Phase to phase voltage: HU12, HU23, HU31

Events (1)

- Alarms on all electrical values

Communications(1)

- 0/4- 20 mA analogue output
- RS485 MODBUS RTU
- Ethernet (MODBUS TCP or RTU over TCP and Webserver)
- Ethernet with RS485 gateway MODBUS RTU over TCP

Inputs / Outputs (1)

- Pulse metering
- Remote control/command
- Alarm report
- Pulse report

(1) Available as an option (see the following pages).

socomec Innovative Power Solutions

Front panel



1. Backlit LCD display.
2. Pushbutton for currents, temperatures and CT setup wiring correction.
3. Pushbutton for voltages and frequency.
4. Pushbutton for active, reactive, and apparent power and power factor.
5. Pushbutton for maximum and average current and power values
6. Pushbutton for harmonics values.
7. Pushbutton for energies and hour run meter.

Plug-in modules

DIRIS® A60*



** With factory fitted memory module.*



Pulse outputs

- 2 configurable pulse outputs (type, weight and duration) on ± kWh, ±kvarh and kVAh.



Communication MODBUS®

- RS485 link with MODBUS® protocol (speed up to 38400 bauds).



Ethernet communication

- Ethernet connection with MODBUS TCP or MODBUS RTU over TCP protocol.
- Embedded Webserver function (1).



Ethernet communication with RS485 MODBUS gateway

- Ethernet connection with MODBUS TCP or MODBUS RTU over TCP protocol.
- Connection of 1 to 247 RS485 MODBUS slaves.
- Embedded Webserver function (1).



Analogue outputs

- A maximum of 2 modules may be connected, providing up to 4 analogue outputs. 2 outputs assignable to: 3I, In, 3V, 3U, F, ± ΣP, ± ΣQ, ΣS, ΣPFL/C, Isys, Vsys, Usys, Ppred, Q pred, Spred, T°C internal, T°C 1, T°C 2, T°C3 and to 17 VDC power supply.



2 inputs - 2 outputs

A maximum of 3 modules may be connected, providing up to 6 inputs.
2 outputs assignable to:
- monitoring: 3I, In, 3V, 3U, F, ± ΣP, ± ΣQ, ΣS, ΣPFL/C, THD 3I, THD In, THD 3V, THD 3U, Ppred, Qpred, Spred, T°C internal, T°C 1, T°C2, T°C3 and hour meter,
- remote control,
- timed remote control,
- 2 inputs for pulse metering.



Temperature(2)

Temperature indication:
- Internal
- External sensor PT 100 (T°C 1)
- External sensor PT 100 (T°C 2)
- External sensor PT 100 (T°C 3).

(1) See "Management softwares for DIRIS" p. 72.
(2) See "External sensor PT 100" p. 67.

DIRIS A60

Multifunction meters - PMD

Energy monitoring and event analysis - Dimensions 96x96

Accessories

Current transformers
(see page 98)

trafo_024_a_2_cat



Current transformers

trafo_077_b_2_cat



IP65 protection

DIRIS_720_a_2_cat



Panel mounting kit
for a 144 x 96 mm cut-out

DIRIS_718_b_1_cat



Terminals

DIRIS A60

DIRIS_856_a_1_x_cat

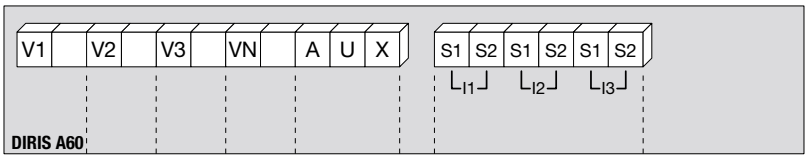

S1 - S2: current inputs

AUX: auxiliary power supplies Us
V1- V2 - V3 - VN: voltage inputs

Communication module

DIRIS_857_a_1_x_cat

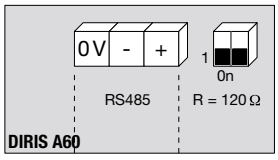

RS485 link.

R = 120 Ω: selectable internal resistance for RS485 end of line termination.

2 inputs / 2 outputs module

DIRIS_858_b_1_x_cat

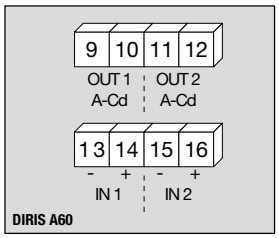

9 - 10: relay output n°1.
11 - 12: relay output n°2.
13 - 14: opto input n°1.
15 - 16: opto input n°2.

Ethernet module + RS485 MODBUS gateway

DIRIS_859_b_1_gb_cat

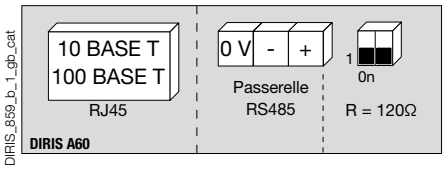

Pulse output module

DIRIS_860_a_1_x_cat

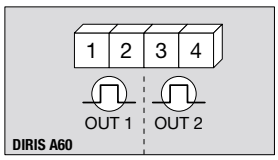

1 - 2: pulse output n°1.
3 - 4: pulse output n°2.

Temperature module

DIRIS_861_a_1_gb_cat

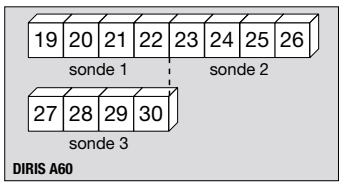

Ethernet Module

DIRIS_862_a_1_x_cat

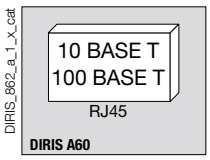

Analogue output module

DIRIS_863_a_1_x_cat

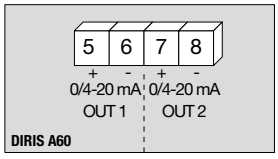

5 - 6: analogue output n°1.
7 - 8: analogue output n°2.

socomec
Innovative Power Solutions

Electrical characteristics

Current measurement on insulated inputs (TRMS)	
Via CT primary	9 999 A
Via CT secondary	1 or 5
Measurement range	0 … 11 kA
Input consumption	≤ 0.1 VA
Measurement updating period	1 s
Accuracy	0,2 %
Permanent overload	6 A
Intermittent overload	10 I_n for 1 s
Voltage measurements (TRMS)	
Direct measurement between phases	50 … 700 VAC
Direct measurement between phase and neutral	28 … 404 VAC
VT primary	500 000 VAC
VT secondary	60, 100, 110, 173, 190 VAC
Frequency	50 / 60 Hz
Input consumption	≤ 0.1 VA
Measurement updating period	1 s
Accuracy	0,2 %
Permanent overload	760 VAC
Current-voltage product	
Limitation for 1A CT	10 000 000
Limitation for 5A CT	10 000 000
Power measurement	
Measurement updating period	1 s
Accuracy	0,5 %
Power factor measurement	
Measurement updating period	1 s
Accuracy	0,5 %
Frequency measurement	
Measurement range	45 … 65 Hz
Measurement updating period	1 s
Accuracy	0,1 %
Energy accuracy	
Active (according to IEC 62053-22)	Class 0.5 S
Reactive (according to IEC 62053-23)	Class 2
Auxiliary power supply	
Alternating voltage	110 … 400 VAC
AC tolerance	± 10 %
Direct voltage	120 … 350 VDC
DC tolerance	± 20 %
Frequency	50 / 60 Hz
Consumption	≤ 10 VA

2 inputs / 2 outputs module: Outputs (alarms / control)	
Number of relays	2(1)
Type	250 VAC - 5 A - 1150 VA
2 inputs / 2 outputs module: Phototransistor inputs	
Number	2(1)
Power supply	10 … 30 VDC
Minimum signal width	10 ms
Minimum duration between 2 pulses	18 ms
Type	Phototransistors
Pulse output module	
Number of relays	2
Type	100 VDC - 0.5 A - 10 VA
Max. number of operations	≤ 10^8
Analogue output module	
Number of outputs	2(2)
Type	insulated
Range	0 / 4 … 20 mA
Load resistance	600 Ω
Maximum current	30 mA
MODBUS communication module	
Link	RS485
Type	2 … 3 half duplex wires
Protocol	JBUS/MODBUS RTU
MODBUS® speed	4800 … 38400 bauds
Ethernet Communication Module	
Connection	RJ45
Speed	10 base T / 100 base T
Protocol	MODBUS TCP or MODBUS RTU over TCP
Temperature inputs	
Type	PT100
Connection	2, 3 or 4 wires
Dynamic	- 20 °C ... 150 °C
Accuracy	+/- 1 digit
Maximum length	300 cm
Operating conditions	
Operating temperature	- 10 … + 55 °C
Storage temperature	- 20 … + 85 °C
Relative humidity	95 %

(1) Max. 3 modules / DIRIS.
(2) Max. 2 modules / DIRIS.

Case

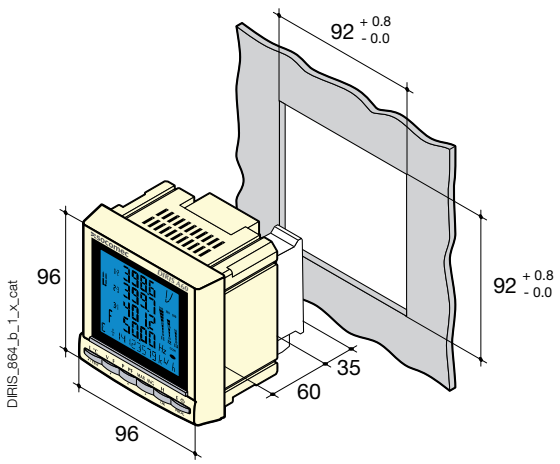

Type	Panel mounting
Dimensions W x H x D	96 x 96 x 95 mm
Case protection rating	IP30
Front protection rating	IP52
Display type	LCD
Terminal blocks type	Fixed or plug-in
Voltage and current connection cross-section	0.2 … 2.5 mm²
Current connection cross-section	0.5 … 6 mm²
Weight	400 g

Connection

Low voltage balanced network for DIRIS A60

Recommendation: When disconnecting the DIRIS, the secondary of each current transformer must be short-circuited. This operation can be carried out automatically by a SOCOMEC PTI, which can be found in the SOCOMEC catalogue: please consult us.

3/4 wires with 1 CT

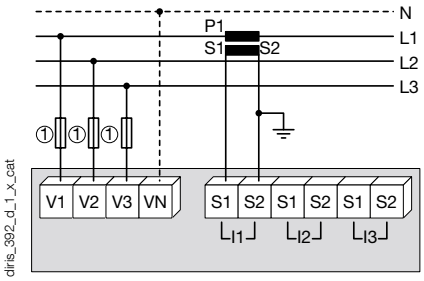

Use of 1 CT reduces by 0.5% the accuracy of the phases, the current of which is worked out by vector calculation.

1. Fuses 0.5 A gG / 0.5 A class CC.

Single phase

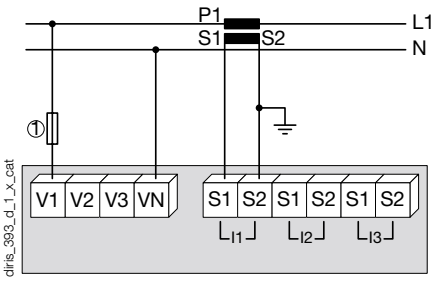

1. Fuses 0.5 A gG / 0.5 A class CC.

Two phase

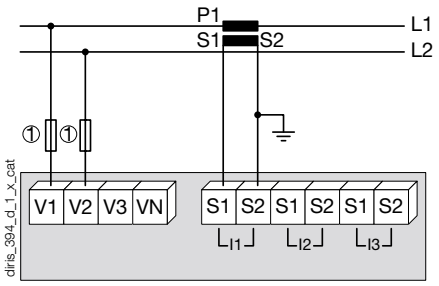

1. Fuses 0.5 A gG / 0.5 A class CC.

Low voltage unbalanced network for DIRIS A60

3/4 wires with 3 CTs

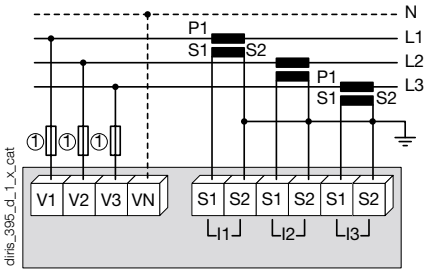

1. Fuses 0.5 A gG / 0.5 A class CC.

3 wires with 2 CTs

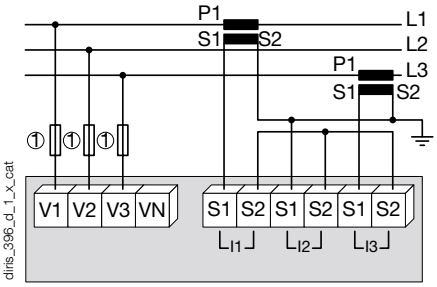

Use of 2 CT reduces by 0.5% the accuracy of the phases, the current of which is worked out by vector calculation.

1. Fuses 0.5 A gG / 0.5 A class CC.

3 wires with 2 CTs

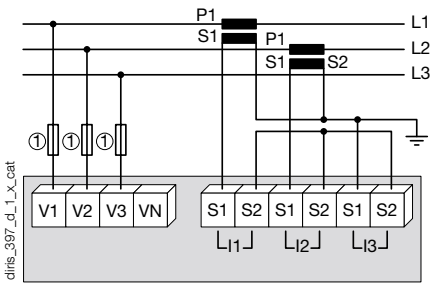

Use of 2 CT reduces by 0.5% the accuracy of the phases, the current of which is worked out by vector calculation.

1. Fuses 0.5 A gG / 0.5 A class CC.

Additional information

Communication via RS485 link

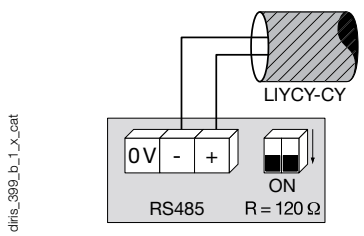

Connection of voltage transformer for HV networks

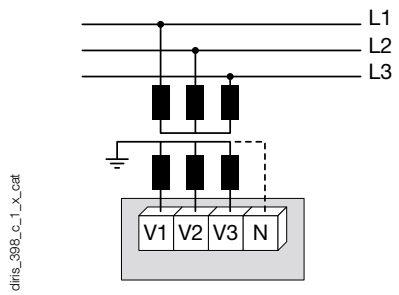

AC & DC auxiliary power supply

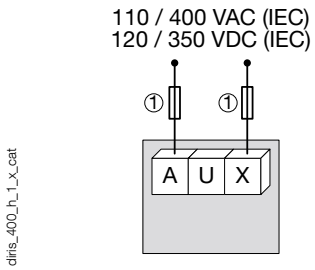

1. Fuses 0.5 A gG / 0.5 A class CC.

References

Basic device **Auxiliary power supply U_s**	**DIRIS A60** **Reference**
110 ... 400 VAC / 120 ... 350 VDC	4825 **0207**
Options **Plug-in-modules**(1)	 **Reference**
Pulse outputs	4825 **0090**
RS485 MODBUS® communication	4825 **0092**
Analogue outputs	4825 **0093**
2 inputs / 2 outputs	4825 **0094**
Ethernet communication (embedded Ethernet Webserver software)(2)	4825 **0203**
Ethernet communication + RS485 MODBUS gateway (embedded Ethernet Webserver software)(1)	4825 **0204**
Temperature inputs	4825 **0206**

(1) Easy integration of additional functions (maximum 4 slots per device).
(2) Dimension of the plug-in module: 2 slots.

Options **Description of accessories**	**To be ordered in multiples of**	 **Reference**
IP65 protection	1	4825 **0089**
Panel mounting kit for a 144 x 96 mm cut-out	1	4825 **0088**
Fuse disconnect switches for the protection of voltage inputs (type RM) 3 poles	4	5601 **0018**
Fuse disconnect switches for the protection of the auxiliary supply (type RM) 1 pole + neutral	6	5601 **0017**
Fuses type gG 10x38 0.5 A	10	6012 **0000**
Ferrite to be associated with communication modules	1	4899 **0011**
Current transformer range	1	See page 98
Temperature sensor PT100 - M6 screw type	1	4825 **0208**
Temperature sensor PT100 - M6 eyelet type	1	4825 **0209**
Management softwares for DIRIS		See page 72



DIRIS A80

Multifonction meters - PMD + RCM

Monitoring energy and fault currents - Dimensions 96x96



DIRIS A80

The solution for

- Industry.
- Infrastructure.
- Health care buildings.
- Data centers.

Strong points

- Compact.
- Patented innovation*
- Management softwares
- Compliant with IEC 61557-12.
- Conformity to standard EN50160

Conformity to standards

- IEC 62053-22 class 0.5S
- IEC 62053-23 class 2
- IEC 61557-12
- IEC 62020
- EN50160

Function

The **DIRIS A80** is a complete multifunction meter that ensures the monitoring of differential or RCM currents (Residual Current Monitoring) with TN-S and TT neutral systems, as well as an improved energy monitoring.A true benefit to the field of energy efficiency as well as asset and personal safety, the DIRIS A80 is used to control energy quality whilst avoiding inconvenient installation shutdowns.

Principle diagram

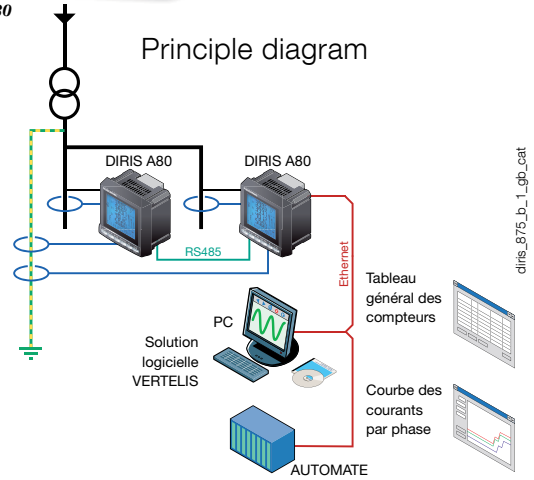

Advantages

Compactness

The DIRIS A80's case (96 x 96 mm) houses two complementary products, enabling faster installation with less space lost. The DIRIS A80 comprises:

- a multifonction meter,
- a RCM fault current monitoring device (Residual Current Monitoring).

Conformity to standard EN50160

- Measuring method of the electrical network voltage characteristics is compliant with the requirements by standard EN50160.
- Voltage is compliant with standard EN50160.

Patented innovation*

Automatic adjustment of the leakage current alarm threshold in accordance with the load current to avoid false alarms.

* French patent applied for

Management softwares

- Webserver tool, integrated within the optional Ethernet module, for monitoring and remotely use data without any specific software.
- Analysis software: for data analysis in order to improve the reliability of your electrical installation.
- Easy Config software: for easy and rapid setting of the DIRIS A60 onto a PC.

Compliant with IEC 61557-12.

Standard IEC 61557-12 is a very precise reference and the common denominator of all PMDs (Performance Monitoring Devices), designed to measure and monitor electrical parameters in distribution networks.

Compliance with IEC 61557-12 ensures a high level of equipment performance, in terms of metrology, and the mechanical and environmental aspects (EMC, temperature, etc.).

Functionalities

Fault currents (RCM)

- Measurement of currents IΔn (I1+I2+I3+In) and IPE (protection conductor)
- Permanent monitoring of IΔn and IPE
  - Fault current alarms depending on the load current
  - Record of events IΔn and IPE (time, duration and curves stored)
  - Alarm report output

Multi-measurement

- Currents
  - instantaneous: I1, I2, I3, In, Isystem,
  - average/maximum average: I1, I2, I3, In,
  - unbalance: I unb
- Voltages & frequency
  - instantaneous: U1, U2, U3, U12, U23, U31, F, Vsystem, Usystem
  - average/maximum average: U1, U2, U3, U12, U23, U31, F
  - unbalance: U unb
- Power
  - instantaneous: 3P, ΣP, 3Q, ΣQ, 3S, ΣS
  - maximum average: ΣP, ΣQ, ΣS
  - predictive: ΣP, ΣQ, ΣS
  - storing of load curves (60 days with an interval of 10 minutes) for the active, reactive and apparent power: ΣP+/-; ΣQ+/-, ΣS
- Power factors
  - PF, ΣPF
- Instantaneous total tangent phi
- Instantaneous, average and max. average unbalance

Metering

- Active energy: +/- kWh
- Reactive energy: +/- kvarh
- Apparent power: kVAh
- Hours

Harmonic analysis (level 63)

- Total harmonic distortion
  - Currents: thd I1, thd I2, thd I3, thd In
  - Phase-to-neutral voltage: thd U1, thd U2, thd U3
  - Phase to phase voltage: thd U12, thd U23, thd U31.
- Individual
  - Currents: HI1, HI2, HI3, HIn
  - Phase-to-neutral voltage: HU1, HU2, HU3
  - Phase to phase voltage: HU12, HU23, HU31.

Events

- Alarms on all electrical values
- Detection and storing of the last 60 events:
  - overvoltage
  - voltage dips
  - cut-offs
  - overloads.

For each stored event, the DIRIS A80 records the relevant RMS 1/2 interval curves for the voltages U1, U2, U3, U12, U23, U31, the currents I1, I2, I3 and In. These curves can be synchronised with the event curves IΔn and IPE.

Communications(1)

- RS485 MODBUS RTU
- Ethernet (MODBUS TCP or RTU over TCP and Webserver)
- Ethernet communication with RS485 MODBUS gateway and Webserver

(1) Available as an option (see the following pages).

socomec Innovative Power Solutions

Front panel



1. Backlit LCD display.
2. Pushbutton for the currents, RCM function and alarm reset.
3. Pushbutton for voltages and frequency.
4. Pushbutton for active, reactive, and apparent power and power factor.
5. Pushbutton for maximum and average current and power values.
6. Pushbutton for the harmonic values, the correction function of CT wiring connection and the RCM test function.
7. Pushbutton for energies and hour run meter.

Accessories

Core balance transformer ΔIC



Plug-in modules

DIRIS® A80





Communication MODBUS®

- RS485 link with MODBUS® protocol (speed up to 38400 bauds).

Ethernet communication

- Ethernet connection with MODBUS TCP or MODBUS RTU over TCP protocol.
- Embedded Ethernet Webserver software(1).

Ethernet communication with RS485 MODBUS gateway

- Ethernet connection with MODBUS TCP or MODBUS RTU over TCP protocol.
- Connection of 1 to 247 RS485 MODBUS slaves.
- Embedded Ethernet Webserver software(1).

(1) See "Management softwares for DIRIS" p. 72.

Terminals

DIRIS A80

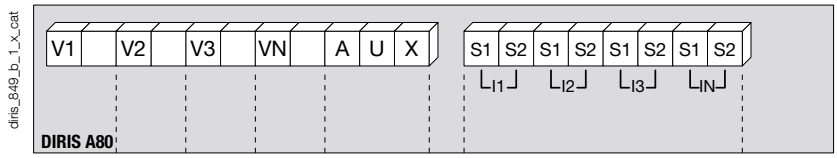

S1 - S2: current inputs

AUX: Auxiliary power supply Us
V1- V2 - V3 - VN: voltage inputs

RCM module
1 input / 1 output

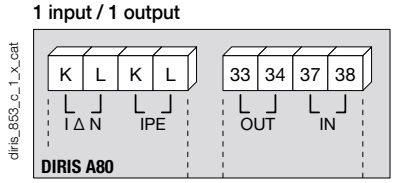

K-L / IΔN: residual current
K-L / IPE: ground fault current
33-34: relay outputs
37-38: opto inputs

RCM module
2 outputs

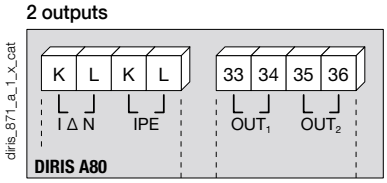

K-L / IΔN: residual current
K-L / IPE: ground fault current
33-34: relay output n°1
35-36: relay output n°2

Communication module

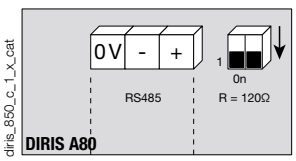

RS485 link.
R = 120 Ω: selectable internal resistance for RS485 end of line termination.

Ethernet Module

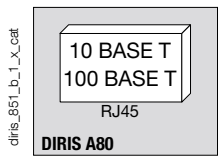

Ethernet module + RS485 JBUS / MODBUS gateway

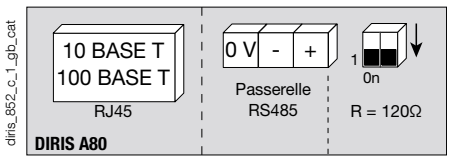

Memory module

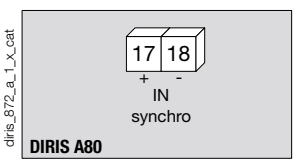

Connections

Additional information

Communication via RS485 link

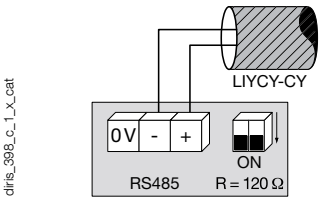

Connection of voltage transformer for HV networks

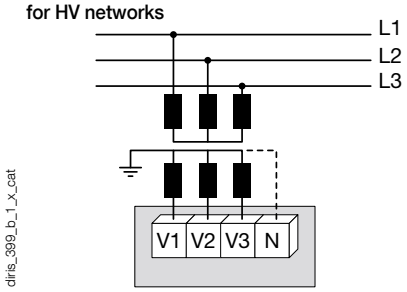

AC & DC auxiliary power supply

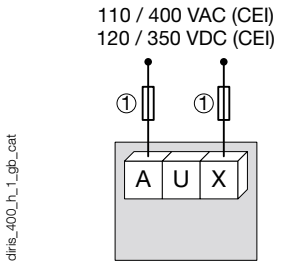

1. Fuses 0.5 A gG / 0.5 A class CC.

Three-phase + N network with RCM

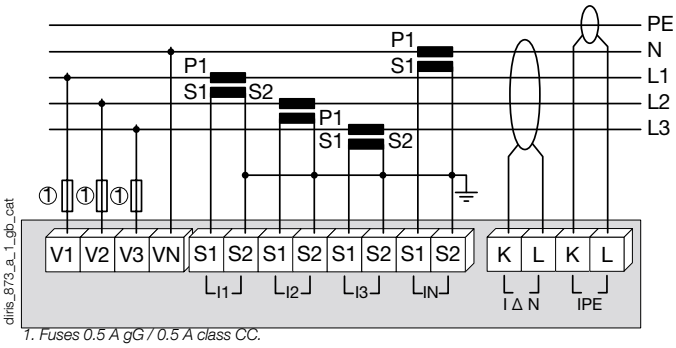

1. Fuses 0.5 A gG / 0.5 A class CC.

Single-phase network with RCM

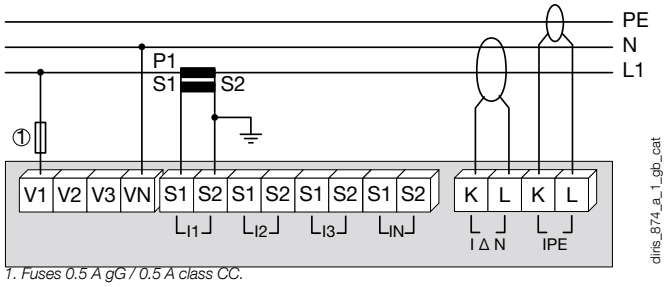

1. Fuses 0.5 A gG / 0.5 A class CC.

Electrical characteristics

Current measurement on insulated inputs (TRMS)	
Via CT primary	9 999 A
Via CT secondary	1 or 5 A
Measurement range	0 … 11 kA
Input consumption	≤ 0.1 VA
Measurement updating period	1 s
Accuracy	0.2 %
Permanent overload	6 A
Intermittent overload	10 I_n for 1 s

Voltage measurements (TRMS)	
Direct measurement between phases	50 … 700 VAC
Direct measurement between phase and neutral	28 … 404 VAC
VT primary	500 000 VAC
VT secondary	60, 100, 110, 173, 190 VAC
Frequency	50 / 60 Hz
Input consumption	≤ 0.1 VA
Measurement updating period	1 s
Accuracy	0.2 %
Permanent overload	760 VAC
Current-voltage product	
Limitation for 1A CT	10 000 000
Limitation for 5A CT	10 000 000
Power measurement	
Measurement updating period	1 s
Accuracy	0.5 %
Power factor measurement	
Measurement updating period	1 s
Accuracy	0.5 %
Frequency measurement	
Measurement range	45 … 65 Hz
Measurement updating period	1 s
Measurement updating period	0.1 %
Energy accuracy	
Active (according to IEC 62053-22)	Class 0.5 S
Reactive (according to IEC 62053-23)	Class 2
Operating conditions	
Operating temperature	- 10 … + 55 °C
Storage temperature	- 20 … + 85 °C
Relative humidity	95 %

Auxiliary power supply	
Alternating voltage	110 … 400 VAC
AC tolerance	± 10 %
Direct voltage	120 … 350 VDC
DC tolerance	± 20 %
Frequency	50 / 60 Hz
Consumption	≤ 10 VA
MODBUS communication module	
Link	RS485
Type	2 … 3 half duplex wires
Protocol	JBUS/MODBUS® RTU
MODBUS® speed	4800 … 38400 bauds
Ethernet Communication Module	
Connection	RJ45
Speed	10 base T / 100 base T
Protocol	MODBUS TCP or MODBUS RTU over TCP
Fault current monitoring characteristics (IΔn and I_{PE})	
Inputs IΔn and I_{PE}	
Number of inputs	2
Dedicated core balance transformers	Range ΔIC – transformer ratio 600/1
Measurement of fault current IΔn / I_{PE}	6 mA … 30 A
Accuracy	1 %
Alarms IΔn and I_{PE}	
Thresholds	Adjustment depending on the load currents
Time setting	0 to 10 s
Logging	Values, dates, durations and curves
Number of events	Max. 1000 events
Optocoupler input	
Number	specific to the reference
Power supply	5…24 VDC
Minimum signal width	10 ms
Minimum duration between 2 pulses	20 ms
Type	Optocoupler
Alarm outputs	
Number of relays	specific to the reference
Type	230 VAC – 1 A
Max. N° of operations	10^4

Case

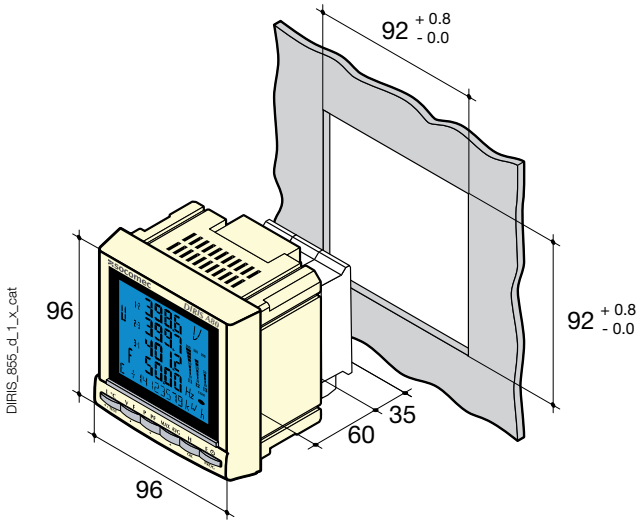

Type	Panel mounting
Dimensions W x H x D	96 x 96 x 95 mm
Case protection rating	IP30
Front protection rating	IP52
Display type	LCD
Terminal blocks type	Fixed or plug-in
Current connection cross-section	0.5 … 6 mm^2
Cable cross-section (for currents ΔIn and I_{PE})	0.14 … 1.5 mm^2
Voltage and current connection cross-section	0.2 … 2.5 mm^2
Weight	560 g

References

Basic device **Type**	**DIRIS A80** **Reference**
With 2 outputs	4825 **0213**
With 1 input / 1 output	4825 **0214**
Options **Plug-in modules**	 **Reference**
RS485 MODBUS® communication	4825 **0092**
Ethernet communication (embedded Ethernet Webserver software)(1)	4825 **0203**
Ethernet communication + RS485 MODBUS gateway (embedded Ethernet Webserver software)(1)	4825 **0204**

(1) Dimensions: 2 slots.

Accessories **Description of accessories**	**To be ordered in multiples of**	**Reference**
IP65 protection	1	4825 **0089**
Panel mounting kit for a 144 x 96 mm cut-out	1	4825 **0088**
Fuse disconnect switches for the protection of voltage inputs (type RM) 3 poles	4	5601 **0018**
Fuse disconnect switches for the protection of the auxiliary supply (type RM) 1 pole + neutral	6	5601 **0017**
Fuses type gG 10x38 0.5 A	10	6012 **0000**
Ferrite to be associated with communication modules	1	4899 **0011**
Current transformer range	1	See page 98

Core balance transformer ΔIC **Type**	**Toroid diameter (mm)**	**Reference**
ΔIC Ø15	15	4950 **6015**
ΔIC Ø30	30	4950 **6030**
ΔIC Ø50	50	4950 **6050**
ΔIC Ø80	80	4950 **6080**
ΔIC Ø120	120	4950 **6120**
ΔIC Ø200	200	4950 **6200**
ΔIC Ø300	300	4950 **6300**
Management softwares for DIRIS		See page 72



COUNTIS and *DIRIS* management softwares



Easy Config software



Analysis software

Function

To get the most effective use from your Socomec measurement and metering devices, we can provide dedicated software tools:

Easy Config software

The Easy Config software enables quick and easy set up, modification and copying of COUNTIS E, COUNTIS ECi and DIRIS A configurations.

Analysis software

On the basis of an event log and the displayed curves, the Analysis software allows the analysis and extraction of quality data, as well as fault current monitoring (Residual Current Monitoring).

Webserver function

The Webserver function require no software installation.It can be directly accessed through a web browser (Internet Explorer, Firefox…) as HTML pages are loaded in the Ethernet communication modules of DIRIS A multifunction meters when fitted.

The Webserver function enables:

- monitoring electrical values,
- viewing energy consumption,
- managing alarms,
- configuring the main parameters of installation,
- viewing and extracting load curves (through a .CSV file).

Principle diagram

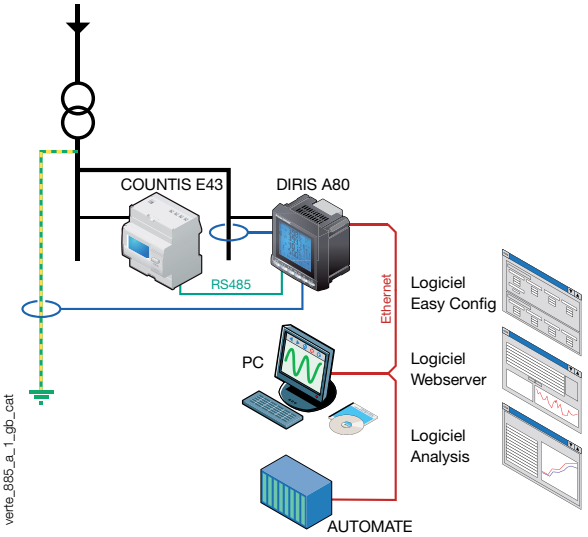

Compatible with:



COUNTIS E



COUNTIS ECi



DIRIS A

	Easy Config	Webserver	Analysis
COUNTIS E with RS485 communication	•	•(1)	
COUNTIS ECi	•	•(1)	
DIRIS A10, A17 and A20 with RS485 communication	•	•(1)	
DIRIS A40 with RS485 communication	•	•(1)	
DIRIS A40 with Ethernet communication module	•	•	
DIRIS A60 and A80 with RS485 communication module	•	•(1)	•
DIRIS A60 and A80 with Ethernet communication module	•	•	•

(1) Through DIRIS A fitted with an Ethernet communication module with gateway RS485.

socomec Innovative Power Solutions

Easy Config software

The Easy Config software enables easy set up of COUNTIS E and DIRIS A configurations.

It offers the following functions:

- Creating the configuration of devices which have not yet been connected (configuration template).
- Saving a configuration to a PC.
- Loading the configuration to a device through RS485 or Ethernet.
- Retrieval of a device configuration using RS485 or Ethernet communication for saving, copying or modification purposes.



diris_886_a_1_gb_cat

Configuration of RCM alarm threshold



diris_883_a_1_gb_cat

Configuration of Quality events

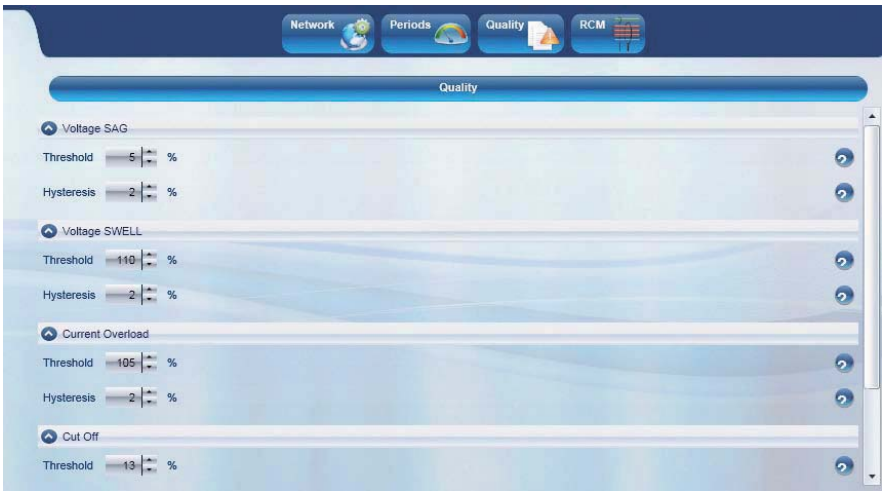

diris_884_a_1_gb_cat

COUNTIS and *DIRIS* management softwares

Webserver function

diris_776_a_1_cat



DIRIS A with Ethernet communication module

The Webserver function comprises HTML pages embedded in the optional Ethernet communication module of the DIRIS A multifunction meter. These pages can be accessed via an internet browser, simply by entering the DIRIS A IP address.The webserver offers the following functionalities:

- Monitoring electrical values.
- Viewing energy consumption.
- Managing alarms.
- Configuring the main parameters of meters included in the installation.
- Viewing and extracting load curves (through a .CSV file).

Instantaneous report of measurements

diris_867_a_1_gb_cat

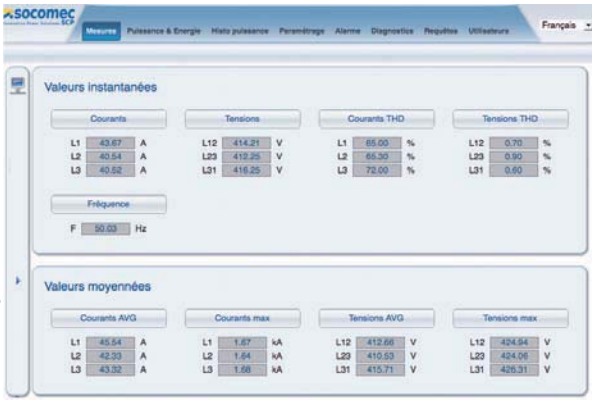

Display for viewing all instantaneous and mean electrical values.

Power and energy

diris_869_a_1_gb_cat



Viewing of average and instantaneous energy consumptions.

Configuration of the devices

diris_868_a_1_gb_cat

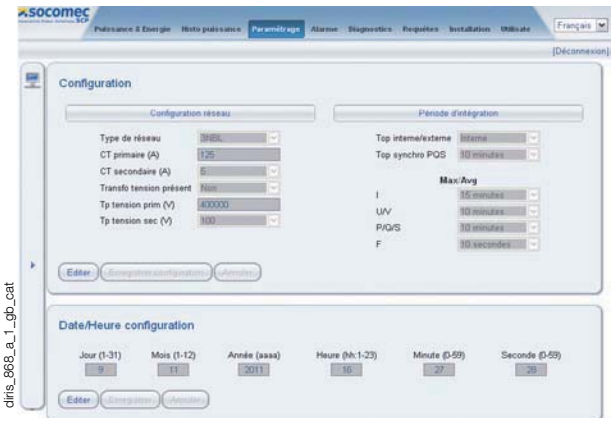

Alarms

diris_864_a_1_gb_cat



The latest alarms are date and time registered. Duration and value reached (low limit value / high limit value), as well as the related output alarm number are also displayed.
Data can be extracted in *.csv format.

socomec Innovative Power Solutions

Analysis software

Improvement to the reliability of your electrical installation can be achieved with this software through the analysis of displayed event curves generated from the event log.

It offers the following functions:

- A list of voltage dips, cut-offs, overvoltages and overcurrents.
- A list of alarms IΔn and I_{PE} for DIRIS A80.
- A display of 10 curves (3V, 3U, 3I, In) linked to the event with a zoom functionality.
- The classification of events according to EN50160 standard.
- Exporting of pictures or curve files.

This software can be connected to the DIRIS using either an RS485 JBUS/MODBUS or Ethernet communication module.
The software can be downloaded from the SOCOMEC website: www.socomec.com

Event log

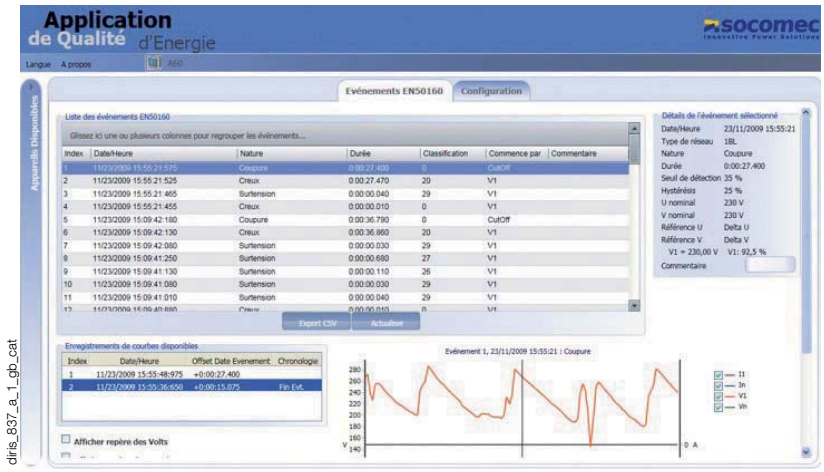

diris_837_a_1_gb_cat

Curves display and analysis

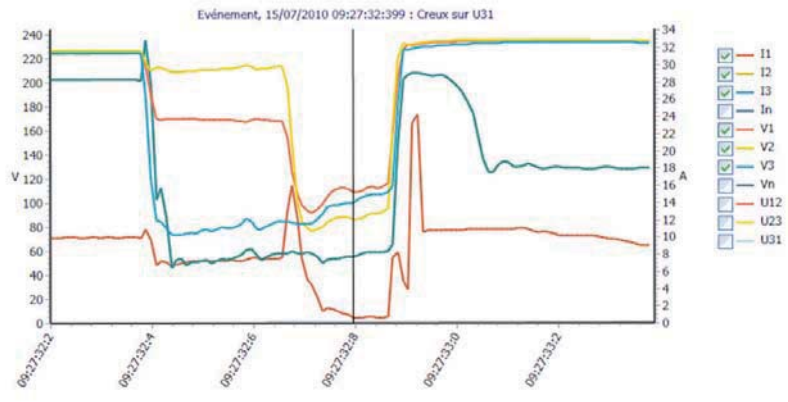

diris_845_a_1_gb_cat



DIRIS N300/N600

Network analysers

Network quality control and analysis system



The solution for

- Industry.
- Infrastructure.
- Health care buildings.
- Data centers.



Strong points

- Easy to use.
- Customisable.
- Powerful.
- Accurate.
- Conformity to standard EN50160.

Conformity to standards

- IEC 61557-12
- IEC 61000-4-30
- IEC 62053-22 class 0.2 S
- IEC 62053-23 class 2
- EN50160

Function

DIRIS N300 / N600 are multifunction network analysers designed for all energy efficiency projects. They actively contribute to procedures for optimising the operation of your electrical networks.
They enable you to:

- improve the efficiency of the facility,
- reduce production costs,
- optimise operating costs,
- optimise maintenance costs,

To ensure these aims are achieved, the DIRIS N assures the following functions:

- measurement of electrical values and temperatures,
- management of energy and allocation of other fluids (water, gas),
- monitoring of all parameters,
- control/command of apparatus,
- analysis of the network quality (waveform, EN50160 report),
- communication.

Advantages

Easy to use

User-friendly and easier browsing thanks to the TFT colour display.

Customisable

Thanks to the optional modules, the product can be customised or be upgraded.

Powerful

The DIRIS N600 can detect transient events of 1 microseconde.

Accurate

High accuracy of the measured electrical values.

Conformity to standard EN50160

The method in which Measuring method of the electrical network voltage characteristics is compliant with the requirements by standard EN50160. Voltage is compliant with standard EN50160.

Principle diagram

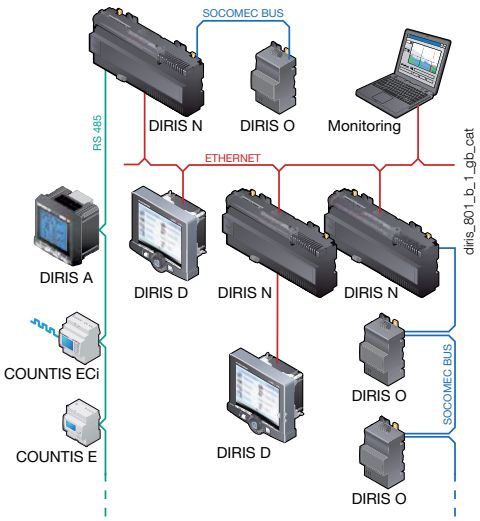

	DIRIS N300 multi-function analyser	DIRIS N600 qualimeter
Advanced multi-measurement	•	•
Measurement history	•	•
Harmonics	•	•
Monitoring	•	•
Load curves	•	•
Troughs/Outages/Voltage surges	•	•
Unbalance	•	•
Vector diagram	•	•
Control command (options)	•	•
Interharmonics measurement		•
Analysis of transient states		•
Flicker		•
EN50160 report		•

Functionalities

The DIRIS N is a true system made up of "functional blocks":

- data acquisition and processing: DIRIS N300/N600
- graphic colour display: DIRIS D (option of using a single DIRIS D for several DIRIS N)
- remote input/output modules: DIRIS O.

In addition, the DIRIS N can provide an interface between products communicating via Modbus, such as DIRIS A or COUNTIS ECi, for example, using an Ethernet network via an RS485 port to centralise information for monitoring.

socomec Innovative Power Solutions

General characteristics of the DIRIS N300 and N600

The vast majority of the functions below are available as numbers (instant, average, minimum and maximum values), graphs (wave captures and 1/2 period RMS) and logs.

Measurements:

- Currents, voltages, frequency (instant, average, minimum and maximum)
- Direct, inverse and homopolar voltages
- Voltage unbalance
- Active, reactive, apparent and predictive power
- Power factor
- Fresnel diagram
- Temperatures

Energy management:

- Active, reactive and apparent energy meters
- Impulse meters (up to 20 meters)
- Timestamped meters (up to 8 meters)
- Load curves

Monitoring:

- Display of an alarm and status log

Indication of the parameter concerned, the status at time T, the duration and date/time of the start and end of the event.

Control/Command (only with the DIRIS O):

- Controls and commands the position of the remote devices
- Programmes the logical functions to create automatic processes

Network and event quality analysis:

- Dips, surges and voltage cut-offs
- Crest factor
- Voltage and current harmonics
- Mains signalling voltages.

Communication:

- RS485 using Modbus
- 10BaseT and 100BaseT Ethernet (Modbus/TCP)
- 2 USB ports (host/device)
- Open CAN (internal bus for DIRIS O modules).

DIRIS N600:

the user also has the following functions:

- Flicker (Pst and Plt)
- EN50160 report
- Voltage transients (sampling 1 µs)
- Voltage and current interharmonics.

A hub of innovation

The **DIRIS N**, developed using innovative technology, has enabled some functions to cross a new frontier.

Measurements

Optimal calculation functions and sampling in the range of 1 µs ensuring a very high level of precision when measuring as shown below:

- Voltages and currents in class 0.1
- Active energy in class 0.2 as per IEC 62053-22
- Harmonics in class 1.

Operation

A DIRIS D colour LCD display module gives the user access to all the installation's parameters with the greatest of ease. They will be able to access both numerical values and graphs.

The DIRIS N offers the option of downloading all the data in its internal memory onto a USB key.

Installation

The DIRIS N, D and O have been designed to be located as close as possible to the function and its operation so as to reduce the number of cables needed.

Using a remote display module avoids having lots of cables across the door; only a RJ45 cable is required. In the same way, power is supplied to the additional DIRIS O modules directly via the communication bus, thus avoiding the use of yet more cables.


diris_759_a_1_gb_cat

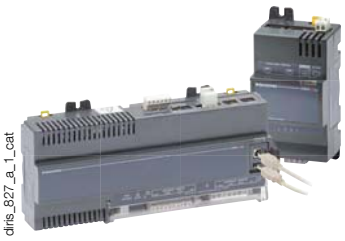
diris_827_a_1_cat

Power Quality Suite software

The DIRIS N300/N600 network analyser is delivered with the software package which allows to manage remotely all features. Friendly and intuitive, these software tools insure the functions of:

Display software
Display for a real time remote monitoring of your installation

This software reproduces the screens of the DIRIS D600 identically on a PC. Any user can therefore access all the data to save time and increase readability:

- Measurements
- Energies
- Events
- Quality Parameters
- Diagnosis.
- Configuration.

Communication between the PC and the DIRIS N units is via Ethernet. A simultaneous display of severalDIRIS N is possible.

All measurements displayed on a single screen

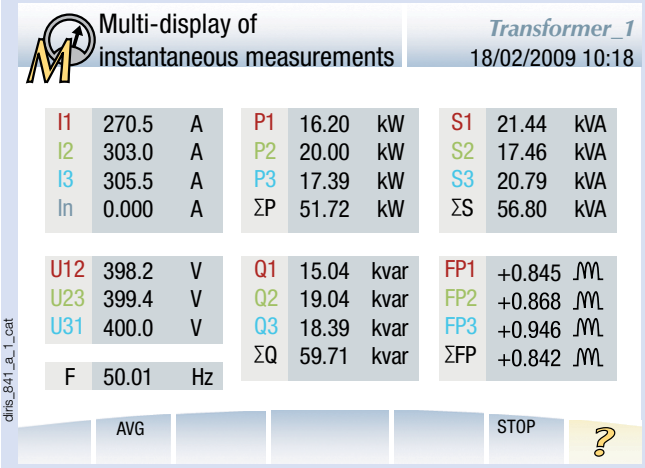

Voltage waveforms displayed

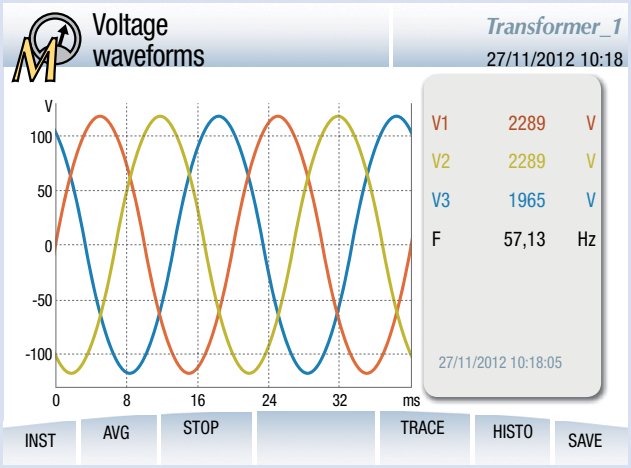

Load curve displayed

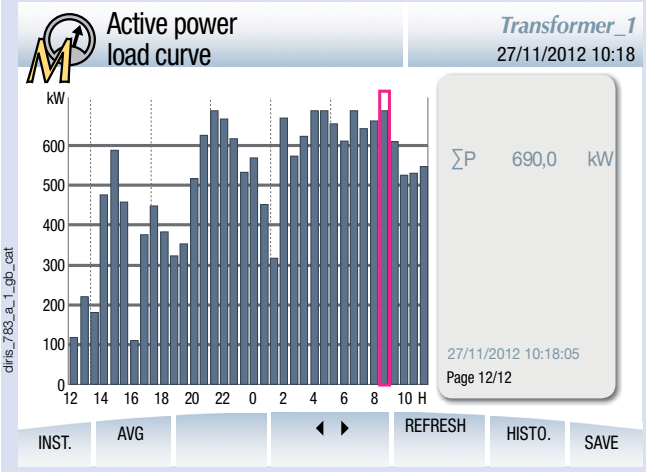

Total and partial consumption displayed per time slot



Settings Software

Configuration for a simple and fast parameter setting

This configurator allows to modify and to adapt quickly the settings parameters of the network analyser. The following parameters are available:

- Networks
- Events
- EN50160 report thresholds
- Pulse meter
- Histories and load curves
- Control/command functions linked to DIRIS O remote modules.

A maintenance function allows the connection and operation of the DIRIS Ns to be checked after they have been configured.



diris_787_b_1_gb_cat



diris_786_b_1_gb_cat

Analysis software

Operation to analyze the quality parameter

This software analyze theDIRIS N300 N600 quality parameters to improve the efficiency of your electrical installation.

It provides the following functions:

- Classification of voltage dips, cuts and surges (Disdip table).
- EN50160 automatic reports (voltages, frequencies, harmonics, flickers...).
- Automatic detection of out of limits event.
- Timestamp EN50160 events list (surges, dips, cut-offs...).

The application enables reports to be issued for periods which can be customised by the user.

The temporal display screen allows rapid access to information relating to the desired period.

Event log: Display

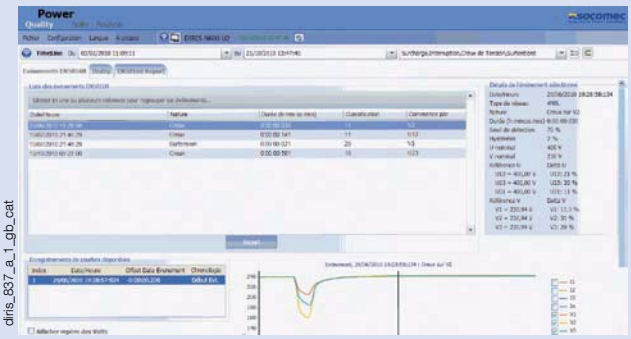

diris_837_a_1_gb_cat

DisDip table template: Configuration


diris_838_a_1_fr_cat

EN50160 report Configuration


diris_839_a_1_fr_cat

EN50160 report Display

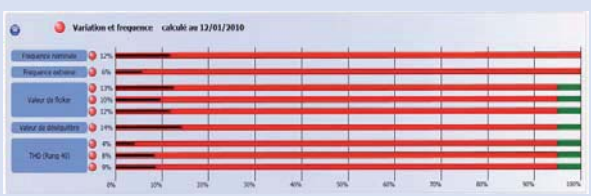
diris_840_a_1_fr_cat

Case

DIRIS N300/N600

Base-mounted



Overall dimensions

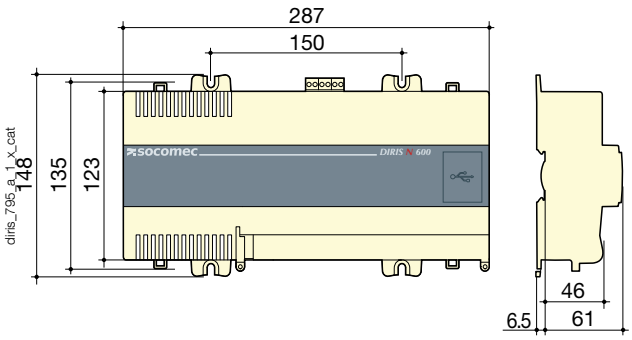

DIN-rail mounting

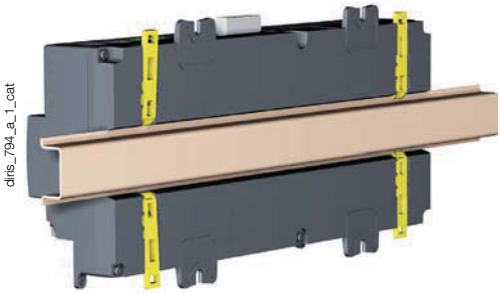

DIRIS D600

Remote display

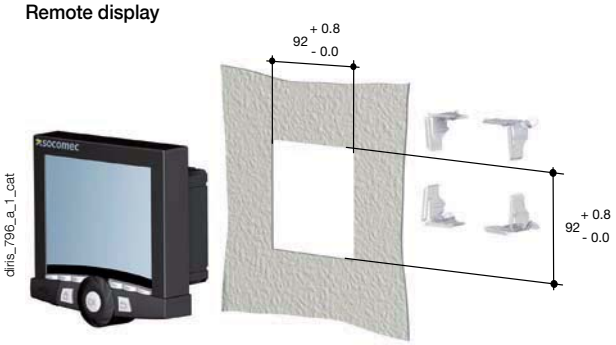

Overall dimensions

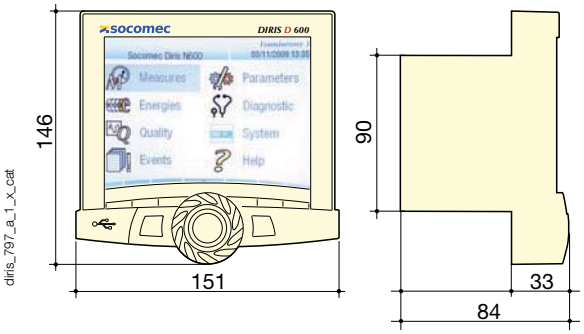

DIRIS O

Base-mounted



DIN-rail mounting

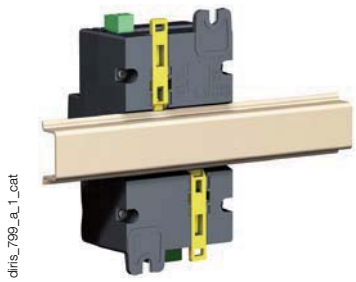

Overall dimensions

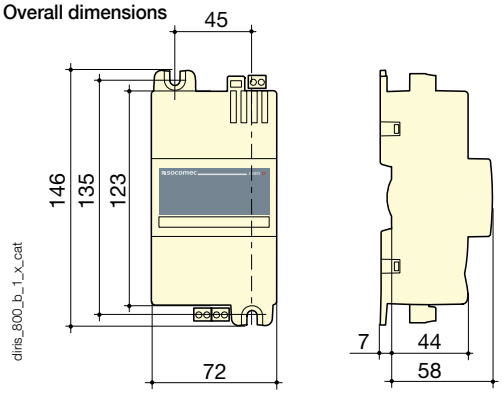

Options

DIRIS D: the ergonomic remote graphic display

diris_763_a_1_cat



diris_762_a_1_gb_cat

1. High-definition colour display.
2. Direct access buttons.
3. Control by rotating wheel.

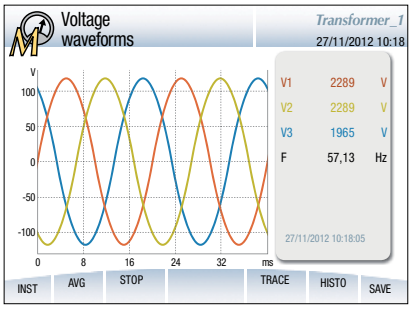

diris_782_b_1_gb_cat

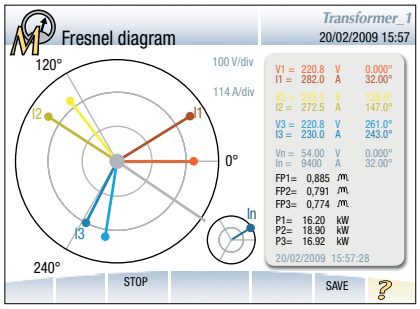

diris_784_a_1_gb_cat

The **DIRIS D600** is a high-definition colour display which allows adaptable, local or remote viewing of the functions of the **DIRIS N300** and **N600**.

A single **DIRIS D 600** display can show information coming from several DIRIS N using windows on the screen dedicated to measurement, analysis of consumption and energy quality, along with their associated events and curves.

DIRIS O: for extended control-command functions

DIRIS O are optional analogue and/or digital input/output modules which can extend the system's functions by taking into account all information relevant to facility supervision (fluids, alarms, etc.).

They communicate with the DIRIS N via a SOCOMEC bus.

They enable you to:

- Acquire and apply the positions of breaker components, contactors, sensors, etc.
- Centralise pulses from water, gas and electricity meters.
- Apply information from analogue sensors (temperature, flow, humidity level, pressure, etc.).
- Actuate breaker components, perform load shedding actions upon alarms. The inputs/outputs can be activated via logic equations.

diris_755_a_1_cat



Characteristics

	DIRIS N300/N600	DIRIS D600 remote display	DIRIS O 4 inputs - 2 outputs	DIRIS O: 2 analogue inputs 0/4…20 mA	DIRIS O: 2 analogue outputs 0/4…20 mA
Auxiliary power supply					
Alternating voltage	110 … 240 VAC				
AC tolerance	± 10 %				
Frequency	50 / 60 Hz				
Direct voltage	48…250 VDC	48 VDC(1)	48 VDC(1)	48 VDC(1)	48 VDC(1)
DC tolerance	± 10 %	± 10 %	± 10 %	± 10 %	± 10 %
Connection	2.5 mm² pull-out 2 point terminal block	2.5 mm² pull-out 2 point terminal block	2.5 mm² pull-out 2 point terminal block	2.5 mm² pull-out 2 point terminal block	2.5 mm² pull-out 2 point terminal block
Mechanical					
Consumption		10 W	1.5 W	1.3 W	2.5 W
Type	Modular		Modular	Modular	Modular
Number of modules	16		4	4	4
Dimensions W x H x D	287 x 123 x 67.5	151 x 146 x 84	72 x 148 x 65	72 x 148 x 65	72 x 148 x 65
Cutout		92 x 92			
Vibrations	IEC 60068-2-6 compliant	IEC 60068-2-6 compliant	IEC 60068-2-6 compliant	IEC 60068-2-6 compliant	IEC 60068-2-6 compliant
Protection degree	IP 40 (nose), IP 20 (unit)	IP 52	IP 52 (front panel), IP 20 (unit)	IP 40 (nose), IP 20 (unit)	IP 40 (nose), IP 20 (unit)
Weight	1 200 g	600 g	200 g	210 g	220 g

(1) Auxiliary supply or via DIRIS N300/N600 limited to 15 W or Power over Ethernet or Power over Can

	DIRIS N300/N600		DIRIS D600 remote display	DIRIS O 4 inputs - 2 outputs	DIRIS O 2 analogue inputs 0/4…20 mA	DIRIS O 2 analogue outputs 0/4…20 mA
Communication						
Link	RS485	ETHERNET	ETHERNET	BUS OPTION	BUS OPTION	BUS OPTION
Type	2 half duplex wires	2 half duplex wires				
Protocol	JBUS/MODBUS RTU	MODBUS® TCP or proprietary	Proprietary in TCP mode	Proprietary in CAN mode	Proprietary in CAN mode	Proprietary in CAN mode
MODBUS® speed	9.6 … 115.2 kbauds					
Address	000 … 256					
Connection	2.5 mm² pull-out 3 point terminal block	1 RJ 45 8 point straight cable	1 RJ 45 8 point straight cable	2 RJ 45 8 point straight cable	2 RJ 45 8 point straight cable	2 RJ 45 8 point straight cable

Characteristics

Characteristics of the PMD (IEC 61557-12)	
Evaluation of the power supply quality (possible function)	-
PMD classification	SD
Temperature	K55
Humidity + Altitude	-
Operating performance class of active power or active energy (if possible function)	0.2
Startup duration	50 seconds
Characteristics of the functions/ Evaluation of the power supply quality (IEC 61557-12)	
P (Total active power) - class 0,2	5 % I_n to 2 I_n
Qa, Qv (reactive power) - class 1	5 % I_n to 2 I_n
Sa, Sv - class 0.2	5 % I_n to 2 I_n
Ea - class 0.2	5 % I_n to 2 I_n
Era, Erv - class 1	5 % I_n to 2 I_n
Eapa, Eapv - class 0.2	5 % I_n to 2 I_n
f - class 0.02 / class B complies IEC 61000 = 4-30	Fnom ±15 %
I - class 0.1	0.1 I_n to 2 I_n
In / Inc - class 0.1	0.1 I_n to 2 I_n
U - class 0.1	
PFa / PFv - class 0.5	PF = 0.5 lag. to 0.5 lead.
Pst / Pit - class 5 (complies CEI 61000-4-15)	0 … 20
Udip - class 0.2	5 % U_n to U_n
Uswl - class 0.2	U_n to 120 % U_n
Utr	0 … 6 kV
Uint - class 0.2	0 … 5 % U_n
Unba - class 0.2	
Unb - class 0.2	
Uh - class 1	
THDu - class 1	
THD-Ru - class 1	
Ih - class 1	
THDi - class 2	
THD-Ri - class 1	
Msv - class 1	
Measurements	
Network type	Three phase without neutral or with neutral
Number of power outlets	3 or 4
Measurement category	600V cat III (IEC 61010-1)
Measurement method class	B (A except for temporal aggregation) (IEC 61000-4-30)
TRMS	Up to level 50
Measurement sampling frequency	10240 Hz (at the nominal network frequency)
Transient sampling frequency	1 MHz that is 1 µs
Instantaneous measurements refresh frequency	one second
Plot refresh frequency	1 … 60 minutes
Event log refresh frequency	1 … 60 s
Voltage inputs	
Number of voltage inputs	3 Phase + Neutral + Earth
Nominal voltage without TP	346 V AC (phase/Neutral) and 600 >V AC (phase/phase)
Voltage transformer	Primary maximum: 630 kVAC / Secondary: 60/100/110/115/120/173/190 VAC
Permanent overload	800 VAC
Frequency	45 … 65 Hz
Insulation	600 V cat III
Connection	2.5 mm² pull-out 3 point terminal block
Current inputs	
Number of current inputs	3 Phase + Neutral
Nominal current without TC	5 A
Current transformers	Primary: max 10000 A / Secondary: 1 or 5 A
Input consumption	< 0.3 VA
Permanent overload	20 A
Intermittent overload	20 I_n / 1s
Insulation	Main
Connection	6 mm² 8 point fixed terminal block
USB	
Host (low power : 100 mA max)	1
Device	1

Memory	
Memory size	128 Mb
Environment	
Max. operating temperature	-10 … +55 °C
Max. storage temperature	-25 … 70 °C
Humidity	0 … 75 % RH
Salt spray	EN 60068-2-52
Protection degree	IEC 60259
Sine vibrations	IEC 60068-2-6
Dry heat test (operation and storage)	IEC 60068-2-2
Wet heat cyclic test	IEC 60068-2-30
in-operation and storage cold test	IEC 60068-2-1
Product standards and certification	
Product standard	IEC 61557-12 ed. 1
Active energy metering	IEC 62053-22 class 0.2S
Reactive energy metering	IEC 62053-23 (class 2)
Measurement standards and certification	
Harmonics and interharmonics measurement method	IEC 61000-4-7
Flicker measurement method	IEC 61000-4-15
Supply power quality measurement method	IEC 61000-4-30
Characteristics of the voltage supplied by public distribution networks	EN 50160
Communication standards and certification	
RS485	TIA-485A
	TSB-89-B
	IEE 802-3AF
Ethernet	802-1.3-2005_Section1
	802-1.3-2005_Section2
Protocol standards and certification	
RS485	MODBUS
Ethernet	MODBUS
USB	USB 2.0
CAN	ISO11898-2
DIRIS D600 screen	
Technology	TFT
Dimensions	640 x 480 pixels
Dimension	115.2 x 86.4 mm
DIRIS O 4i2o-d inputs (4 inputs/2 outputs)	
Number	4
Type	Phototransistors
Power supply	10 … 30 VDC
Minimum current	1 mA
Main insulation for < 300 VAC Ph/N network	2.5 kVAC rms 1 minute
Leakage path	> 3 mm
Number of switchings	10^8 operations
DIRIS O 4i2o-d outputs (4 inputs/2 outputs)	
Number of switchings	≥ 10^5
Power supply	230 VAC - 250 VDC - 0.2 A - 1500 VA - 50 W
Number of relays	2
Leakage path	> 3 mm
Main insulation for < 300 VAC Ph/N network	2.5 kVAC rms 1 minute
DIRIS O 2i-a inputs (2 analogue inputs)	
Number	2
Scale	0 / 4 … 20 mA
Accuracy	≤ 1 % of full scale (which is ≤ 0.2 mA)
Max. impedance of inputs	200 Ω
Main insulation for < 300 VAC Ph/N network	2.5 kVAC rms 1 minute
Leakage path	> 3 mm
DIRIS O 2o-a outputs (2 analogue outputs)	
Number of outputs	2
Scale	0 / 4 … 20 mA
Load resistance	600 Ω
Accuracy	≤ 0.5 % of full scale (which is ≤ 0.1 mA)
Maximum current	25 mA
Main insulation for < 300 VAC Ph/N network	2.5 kVAC rms 1 minute
Leakage path	> 3 mm

Terminals

DIRIS N300/N600

Lower terminal blocks

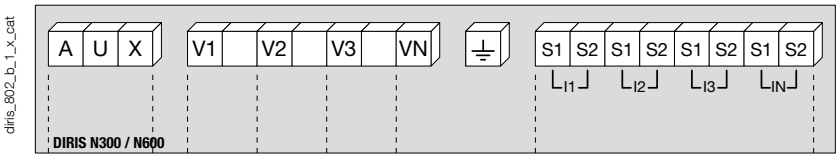

Upper terminal blocks

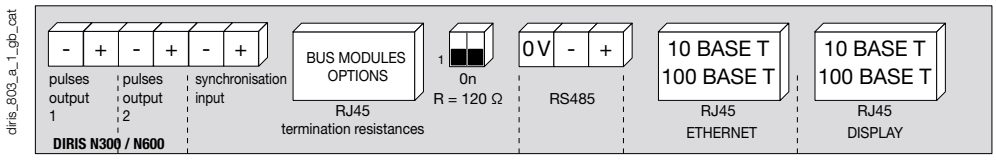

DIRIS O

Upper terminal blocks (shared by all modules)

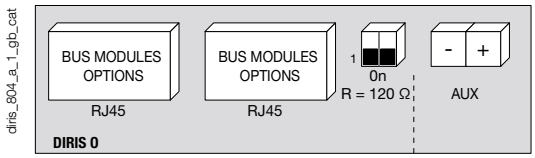

4 inputs / 2 outputs digital

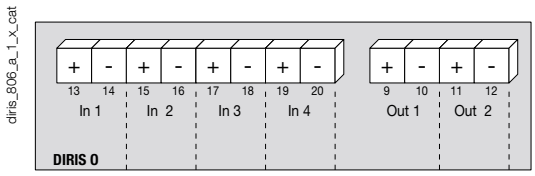

2 analogue outputs, 0/4-20 mA

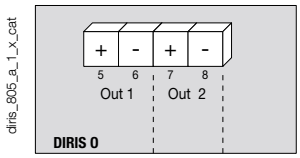

2 analogue inputs, 0/4-20 mA

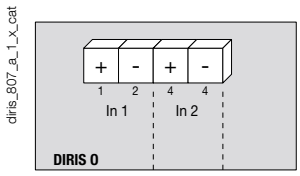

References

Description		DIRIS N300/N600 Reference
DIRIS N300		4826 **0001**
DIRIS N600		4826 **0002**
Optional		**DIRIS D600**
Description		**Reference**
DIRIS D600 (remote display)		4826 **0003**
Accessories		
Description of accessories	**To be ordered in multiples of**	**Reference**
Fuse disconnect switches for the protection of voltage inputs (type RM) 3 poles	4	5601 **0018**
Fuse disconnect switches for the protection of the auxiliary supply (type RM) 1 pole + neutral	6	5601 **0017**
Fuses type gG 10x38 0.5 A	10	6012 **0000**
Current transformer range		See page 98



RETROFIT Line

Meters and multifunction meters dedicated to exiting installations

RETROFIT meters + current transformers



COUNTIS E44R



DIRIS A40R



TC0 36 400 A

Function

Existing sites, having been built before optimised energy consumption was a consideration, are especially in need of a dedicated energy efficient solution.

To meet this requirement, the **RETROFIT Line** allows you to easily add metering and measurement points in electrical enclosures which are very restricted in terms of integration.

The RETROFIT Line consists of COUNTIS RETROFIT and DIRIS RETROFIT meters combined with TCO split-core current transformers. Together they allow measuring, metering, monitoring and analysis of single and three phase networks up to 600 A, even inside the most confined cabinet spaces.

Advantages

High overall accuracy

A global system measuring accuracy of better than 1% in energy from 10 to 120% of nominal current.

Easy installation

TCO split-core transformers mean the power cables do not need to be disconnected.

Operations are quicker and minimise the electrical disconnection time.

Extended range

The range covers energy meters and multifunction meters in modular or panel mounted format.

Proven products

The COUNTIS and DIRIS RETROFIT are based on standard SOCOMEC ranges.

Communication to Monitoring

The data from RETROFIT products can be transferred to a central monitoring system.

Guaranteed connections

The product is protected against phase/ neutral inversion and detects wiring errors. Commissioning has been simplified to ensure the device operates correctly: installation costs are therefore reduced.

Principle diagram

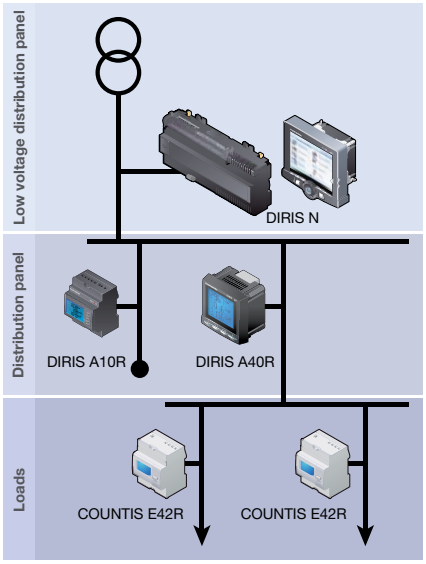

The solution for

- Industry.
- Infrastructure.
- Data centers.



Strong points

- High overall accuracy.
- Easy installation.
- Extended range.
- Proven products.
- Communication to a Monitoring system.
- Guaranteed connections.

Conformity to standards

COUNTIS:

- IEC 62053-21
- IEC 62053-22
- IEC 62053-23
- IEC 62053-31
- EN 50470 (MID - COUNTIS E42R/E44R)

DIRIS:

- IEC 61557-12

socomec Innovative Power Solutions

RETROFIT Packs

refit_002_a_1_cat



refit_010_a_1_cat



Combination of COUNTIS RETROFIT meters and TCO split-core current transformers

Meter all the values of the electrical network or any other energy (via the pulse concentrator COUNTIS ECi) in order to:

- Optimise and share energy costs,
- Reinvoice the consumption to the user (MID versions).

refit_005_a_1_cat



refit_010_a_1_cat



Combination of DIRIS RETROFIT multi-measurement meters and TCO split-core current transformers

Measure and monitor all the values of the electrical network, or any other energy (via the pulse concentrator COUNTIS ECi), in order to:

- Analyse energy consumption and quality,
- Identify malfunctions,
- Improve the availability of the installation.

RETROFIT Line

Meters and multifunction meters dedicated to exiting installations

RETROFIT meters + current transformers

Meters

Function

The **COUNTIS E4xR of the RETROFIT pack** is an active electrical energy meter designed for three-phase networks. It is connected to the network through 3 TCO's up to 600 A.

The **COUNTIS E42R of the RETROFIT pack** is a totalising meter allowing direct reading of the power consumed, using a pulse output. It is a double tariff meter for dual tariff invoicing.

The **COUNTIS E44R pack** offers JBUS/MODBUS RTU communication via RS485 and includes 4 tariffs.
COUNTIS E42R and **E44R** are MID-certified (B + D module).

The **COUNTIS E5xR pack** includes an active and reactive energy meter (96 x 96 mm unit).
Two partial meters with reset allow the energy to be metered over a specific period.

References

Kit	CT Ratio	COUNTIS E42R RETROFIT Pack Reference	COUNTIS E44R RETROFIT Pack Reference	COUNTIS E50R RETROFIT Pack Reference	COUNTIS E53R RETROFIT Pack Reference
Energy meter kWh MID + 3 TCO	100 A / 1 A	4850 **4915**	4850 **4916**		
Energy meter kWh MID + 3 TCO	250 A / 1 A	4850 **4925**	4850 **4926**		
Energy meter kWh MID + 3 TCO	400 A /1 A	4850 **4935**	4850 **4936**		
Energy meter kWh MID + 3 TCO	600 A / 1 A	4850 **4945**	4850 **4946**		
Energy meter kWh + 3 TCO	100 A / 1 A			4850 **4917**	4850 **4918**
Energy meter kWh + 3 TCO	250 A / 1 A			4850 **4927**	4850 **4928**
Energy meter kWh + 3 TCO	400 A /1 A			4850 **4937**	4850 **4938**
Energy meter kWh + 3 TCO	600 A / 1 A			4850 **4947**	4850 **4948**

Technical characteristics(1)

	COUNTIS E42R	COUNTIS E44R	COUNTIS E50R	COUNTIS E53R
Current measurement				
Type	TC/1 A up to 600 A	TC/1 A up to 600 A	TC/1 A up to 600 A	TC/1 A up to 600 A
Input consumption	0.2 VA per phase	0.2 VA per phase	< 0.6 VA	< 0.6 VA
Overload	24 A / 0.5 s	24 A / 0.5 s	10 I_n for 1 s	10 I_n for 1 s
Permanent overload	1.2 A	1.2 A	1.2 A	1.2 A
Minimum current measured	10 mA	10 mA	3 mA	3 mA
Voltage measurement				
Range of measurement	230… 400 V ± 15 %	230… 400 V ± 15 %	28 … 520 VAC	28 … 520 VAC
Input consumption	2 VA	2 VA	< 0.1 VA	< 0.1 VA
Permanent overload	280 V	280 V	800 VAC	800 VAC
Energy accuracy				
Active (according to EN 50470)	Class C	Class C		
Active (according to IEC 62053-22)			Class 0.5 S	Class 0.5 S
Reactive (according to IEC 62053-23)			Class 2	Class 2

(1) Features not mentioned are identical to those of COUNTIS E4X and E5x standard products.

What are the advantages of a MID meter?

It allows to resell electricity

The MID directive guarantees safe and reliable metering. The meter is tamper-proof and its accuracy is guaranteed thanks to calibration on a metrology bench.

COUNTIS E42R and **E44R** are MID-certified (B + D module). It is mandatory and this means SOCOMEC is required to supply products which meet the design and manufacturing requirements imposed by this standard.

The specificity of MID product

- Standardised accuracy A, B or C: Socomec MID meters have a guaranteed accuracy class C ± 0.5%.
- Tamper-proof devices: protection cover and seals are provided.
- Mandatory markings: CE + MID front and side marking confirms the compliance to modules B + D.
- Related Certificate: provided by Socomec, it formalizes the accuracy verification of the energy meter at four different current levels.

socomec Innovative Power Solutions

Multi-measurement meters

Function

DIRIS A RETROFIT packs include a multifunction meter and 3 TCO's up to 600 A.

The **DIRIS A10R pack** includes a multifunction meter in modular format for measuring electrical values in low voltage networks. It allows all electrical parameters to be displayed and utilised for communication and/or output functions.For further details on functions see the standard DIRIS A10 pages.

In the **DIRIS A20R** and **DIRIS A40R** packs, the multifunction meter (96 x 96 mm unit) is dedicated to low voltage networks. It ensures the user has access to all the measurements required for successfully carrying out energy efficiency project and ensuring the electrical distribution is monitored. For more information, please see the standard DIRIS A20 pages.

The DIRIS A40R pack offers advanced features and a larger choice of options. Please see the standard DIRIS A40 pages for more information.

References

DIRIS RETROFIT packs Kit	CT Ratio	A10R without COM Reference	A10R with COM Reference	A20R Reference	A40R Reference
DIRIS A10R + 3 TCO	100 A / 1 A	4825 **4911**			
DIRIS A10R + 3 TCO	250 A / 1 A	4825 **4921**			
DIRIS A10R + 3 TCO	400 A /1 A	4825 **4931**			
DIRIS A10R + 3 TCO	600 A / 1 A	4825 **4941**			
DIRIS A10R with COM + 3 TCO	100 A / 1 A		4825 **4912**		
DIRIS A10R with COM + 3 TCO	250 A / 1 A		4825 **4922**		
DIRIS A10R with COM + 3 TCO	400 A /1 A		4825 **4932**		
DIRIS A10R with COM + 3 TCO	600 A / 1 A		4825 **4942**		
DIRIS A10R + 3 TCO	100 A / 1 A			4825 **4913**	
DIRIS A20R + 3 TCO	250 A / 1 A			4825 **4923**	
DIRIS A20R + 3 TCO	400 A /1 A			4825 **4933**	
DIRIS A20R + 3 TCO	600 A / 1 A			4825 **4943**	
DIRIS A40R + 3 TCO	100 A / 1 A				4825 **4914**
DIRIS A40R + 3 TCO	250 A / 1 A				4825 **4924**
DIRIS A40R + 3 TCO	400 A /1 A				4825 **4934**
DIRIS A40R + 3 TCO	600 A / 1 A				4825 **4944**

Plug-in optional modules - DIRIS A20	Reference
1 output	4825 **0080**
RS485 JBUS/MODBUS® communication	4825 **0082**

Plug-in optional modules [1] - DIRIS A40	Reference
Pulse outputs	4825 **0090**
RS485 JBUS/MODBUS® communication	4825 **0092**
Analogue outputs	4825 **0093**
2 inputs / 2 outputs	4825 **0094**
Communication Sub D9 PROFIBUS®DP[2]	4825 **0205**
Memory	4825 **0097**
Ethernet communication (embedded Ethernet Webserver software)[2]	4825 **0203**
Ethernet communication + RS485 JBUS/MODBUS gateway (embedded Ethernet webserver software)[2]	4825 **0204**
Temperature inputs	4825 **0206**

(1) Easy integration of additional functions (maximum 4 slots per device).
(2) Dimension of the plug-in module: 2 slots.

Technical characteristics[1]

	DIRIS A10R	DIRIS A10R + communication	DIRIS A20R	DIRIS A40R
Current measurement on high-impedance inputs (TRMS)				
Via CT primary	600 A	600 A	600 A	600 A
Via CT secondary	1 A	1 A	1 A	1 A
Input consumption	0.6 VA	0.6 VA	0.6 VA	≤ 0.1 VA
Measurement updating period	1 s	1 s	1 s	1 s
Accuracy	0.2 %	0.2 %	0.2 %	0.2 %
Permanent overload	1.2 A	1.2 A	1.2 A	1.2 A
Intermittent overload	10 I_n for 1 s	10 I_n for 1 s	10 I_n for 1 s	10 I_n for 1 s
Voltage measurements (TRMS)				
Direct measurement between phases	50 … 500 VAC	50 … 500 VAC	50 … 500 VAC	50 … 700 VAC
Direct measurement between phase and neutral	28 … 289 VAC	28 … 289 VAC	28 … 289 VAC	28 … 404 VAC
VT primary				500 000 VAC
VT secondary				60, 100, 110, 173, 190 VAC
Input consumption	≤ 0.1 VA	≤ 0.1 VA	≤ 0.1 VA	≤ 0.1 VA
Measurement updating period	1 s	1 s	1 s	1 s
Accuracy	0.2 %	0.2 %	0.2 %	0.2 %
Permanent overload	800 VAC	800 VAC	800 VAC	760 VAC
Power measurement				
Measurement updating period	1 s	1 s	1 s	1 s
Accuracy	0.5 %	0.5 %	0.5 %	0.5 %

(1) Characteristics that are not listed are identical to those of the standard DIRIS A10, A20 and A40 range.

DIRIS RETROFIT: compliant with the requirements of standard IEC 61557-12

Why comply with the IEC 61557-12 standard?

A precise reference, IEC 61557-12 is the common denominator of all PMDs (Performance Monitoring Devices), devices designed to measure and monitor electrical parameters in distribution networks.

What does it bring to the user?

The guarantee of a high level of equipment performance when considering metrological, mechanical and environmental aspects (EMC, temperature, etc.).

TCO - split-core current transformers

Function

The TCO's included in the RETROFIT pack are compact split core current transformers, which can be easily and rapidly integrated in existing installations thanks to their reduced dimensions. The TCO small split-core current transformers must be only combined with COUNTIS RETROFIT energy meters and DIRIS RETROFIT multi-measurement energy meters.

The RETROFIT pack guarantees overall accuracy to within less than 1 %.

Technical characteristics

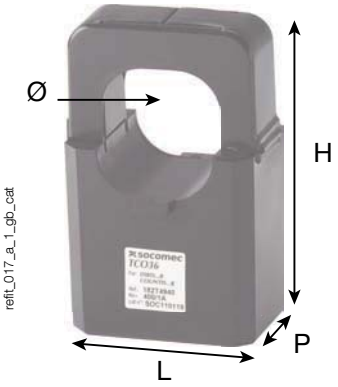

refit_017_a_1_gb_cat

	TCO 24		TCO 36	
Primary / Secondary	100 A / 1 A	250 A / 1 A	400 A /1 A	600 A / 1 A
Accuracy class(1)	1		1	
Internal diameter Ø (mm)	24	24	36	36
Dimensions H x W x D (mm)	74.5 x 45 x 34	74.5 x 45 x 34	91 x 57 x 40.5	91 x 57 x 40.5

(1) Global accuracy guaranteed when associating COUNTIS or DIRIS RETROFIT products + split-core CT with load between 10 % to 120 % of primary current.

	TCO 24		TCO 36	
	Reference	Reference	Reference	Reference
TCO	182T **4910**	182T **4925**	182T **4940**	182T **4960**

The advantages of TCO split-core current transformers

Wide current range

The TCOs accept a primary current between 100 and 600 A making it possible to connect at different points in the installation.

A guaranteed overall accuracy

Combined with the COUNTIS and DIRIS RETROFIT products, the TCO guarantees overall accuracy is better than 1%.

Compact

With their compact and open design, the TCOs are easily positioned on existing installations without the need to disconnect/reconnect the cables or modify the installation. Measurement points can therefore be placed in the most confined panels.

Services

Take advantage of the advice offered by an energy specialist

Socomec offers a full range of customised services for your energy efficiency requirements and can help you find the best solution:

- Implementation
- Training
- Electrical facility audit
- Project engineering.



sydiv_069_a_1_gb_cat

For more details download our Service brochure available on our web site : www.socomec.com or contact your SOCOMEC office.

Zoom


count_207_a_1_cat

Think about it

COUNTIS ECi

Communicate consumption information whatever the energy (electricity, water, gas...) to a PC or PLC.
Please see the COUNTIS ECi catalogue pages.

VERTELIS Supervision

Opt for sustainable energy savings by choosing the fully customisable energy efficiency solution provided by SOCOMEC. VERTELIS is a modular offer, including a software, measuring devices adapted to your needs, as well as pre-sales and after sales professional services.
For further information, please contact your SOCOMEC branch.

VERTELIS
ENERGY PERFORMANCE SOLUTIONS



VERTELIS VISION

Software for Power Management Supervision (PMS)

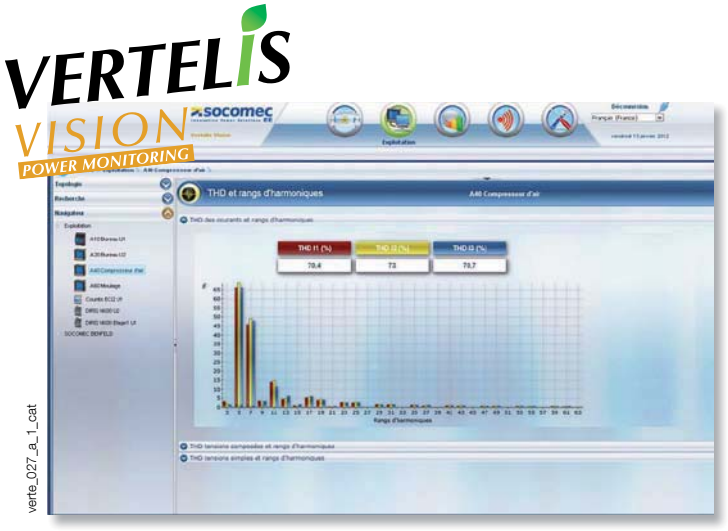

Function

The first step in your Energy Efficiency approach, **VERTELIS VISION** is a solution composed of an industrial PC with embedded software (Vertelis box). Its functionalities can be accessed from any terminal (PC, pad, etc.) using a standard Internet browser (Internet Explorer, Firefox, etc.). Its purpose is to the collect data from DIRIS A, DIRIS N, COUNTIS E and COUNTIS ECi products for report analysis and event log or alarm management purposes.

Communication between the Vertelis box and the devices is achieved either by means of the Ethernet network or a serial RS485 port.

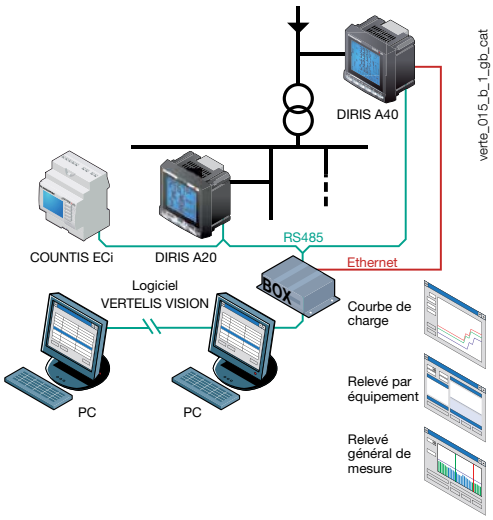

Advantages

Turnkey solution.

For easy and quick implementation, our solution includes commissioning and software setting.

Report auto-configuration

Only devices, their hierarchy and energy tariffs should be defined.

Dedicated box

The VERTELIS VISION software is pre-installed in a dedicated box, ensuring safety and reliability.

Display of multi-utility load curves

Key element to check that your contract tariff is adapted to your consumption.

The solution for

- Industry.
- Office buildings.
- Infrastructure.
- Public buildings.



Strong points

- Turnkey solution.
- Report auto-configuration.
- Dedicated box.
- Display of multi-utility load curves.

Services & Technical Assistance

- Our expertise extends to a complete offer of customised services like installation audit, commissioning, training, maintenance, and project engineering.

Functionalities

The VERTELIS VISION solution communicates with all SOCOMEC products included in the installation.Thanks to manual or automatic measurements, instantaneous or logged data reports are accessible using an Internet browser (IE 9, Firefox).

It offers the easy supervision of the instantaneous energy consumed by furnaces, manufacturing facilities, office buildings, etc.

The user can also have access to:

- The logs of the selected electrical values over a defined time period.
- The alarms (measurements, consumptions, status…)
- Indications of malfuntions arising from the installation.
- A manual or automatic report extraction..

All of this information is based on the measurements reported on a device or set of devices.

For easy and quick implementation, the VERTELIS VISION solution includes commissioning. Other services can be provided by SOCOMEC, so do not hesitate to consult us.

General characteristics

The VERTELIS VISION solution makes it possible to:

- Supervise up to 50 measurement points.
- Depending on the product characteristics, view energy indexes, electrical values (U, I, FP, f, harmonics, etc.) and alarms.
- View curves and statistics of the data logs selected.
- Remotely set the date and time, the reset of indexes and the relay status.
- Show the load or average curves (10, 15, 20 or 30 min) and the related value charts for DIRIS A40/A60/A80 and COUNTIS Ci / ECi.
- Set the automatic release of reports.

Communication with SOCOMEC products:

- Connection type: RS485, Ethernet.
- Supported protocols:
  Modbus RTU.
  Modbus TCP.
  Modbus RTU over TCP.

Languages

Multi-language software, includes the following as standard: English, French, Spanish, German, Italian, Dutch, Turkish.

Check it out

Supervision software
VERTELIS HYPERVIEW

To get more functionalities, services and measurement points, the VERTELIS HYPERVIEW energy efficiency solution is available.

For further information, please contact your SOCOMEC branch.



Functionalities

General instantaneous reports

Measurements, indexes and inputs/outputs are presented in charts.
The data availability and content can vary depending on the selected device.
The user can decide to include each device in his reports.
These pages are automatically refreshed over a defined period of time.
They can also be extracted manually.

verte_016_a_1_gb_cat

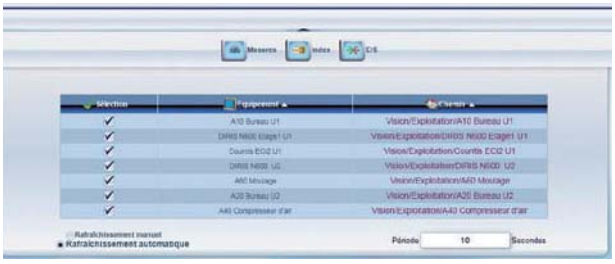

Measurements

The page presenting the measurement general report shows the following data for the selected device:
- currents,
- phase to neutral voltages,
- phase to phase voltage,
- frequency,
- active, reactive and apparent power per phase,
- power factors,
- impulse metering inputs (DIRIS A).

If data is not available for a specific device or if the network setting is not compatible, a dash (-) is displayed in the corresponding field.

verte_017_a_1_gb_cat

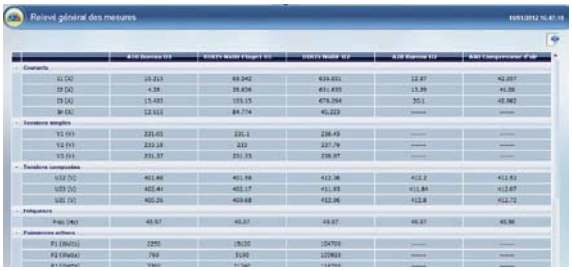

Index

The 'Index' page shows the following data categories for all the DIRIS and COUNTIS selected:
- partial electrical values,
- total electrical values,
- partial indexes,
- total indexes.

verte_018_a_1_gb_cat



Single device instantaneous reports

Depending on the characteristics of the device selected, the following pages are available:
- measurements,
- index,
- quality,
- inputs/outputs.

These pages are automatically updated over a defined period of time.Data can be extracted in *.csv format.

Measurements

The 'Measures' page displays the following data:
- currents,
- phase to neutral voltages,
- phase to phase voltage,
- frequency,
- power factors,
- active, reactive and apparent power
- impulse metering inputs (DIRIS A).

verte_019_a_1_gb_cat



Index

Digital data viewing depends on the device characteristics:
- index of electrical values,
- values ol pulse meters,
- time index,
- index per tariff category.

Quality

For the selected DIRIS A or N, viewing of harmonic curves and distortion rate charts:
- the 3 currents and the neutral (depending on the network type),
- the phase to phase and phase to neutral voltages (depending on the network type).

verte_020_a_1_gb_cat



Functions

Log file

The VERTELIS VISION software has been designed to analyse the remotely reported data stored over a selected period, that is:
- statistics and stored data,
- reports of indexes,
- load curves.

Statistic reports and history logs

They are classified by:
- index,
- measures,
- quality,
- events.

Parameters stored include:
- the minimum value per day,
- the maximum value per day,
- the latest logged value,
- a link to the statistics page,
- a link to all the data logged.

Index

verte_023_a_1_gb_cat

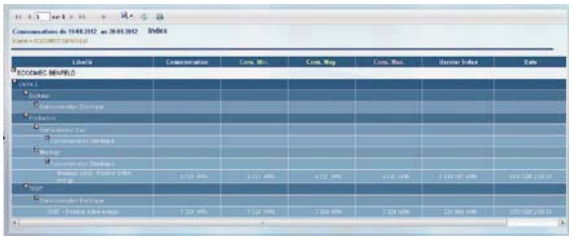

Statistics on Quality

The minimum, average and maximum values per day over the selected period for analysed data are displayed. Data is displayed under curve and chart format.

verte_024_a_1_gb_cat



Quality history logs

It is possible to view the graph and chart of stored measurements over the selected period.

verte_025_a_1_gb_cat



Index report

They display a chart including the multi-utility indexes with the following information:
- start value,
- end value,
- consumption difference in the corresponding utility unit,
- consumption difference in a unit common to all utilities,
- average cost over the period.

verte_028_a_1_gb_cat

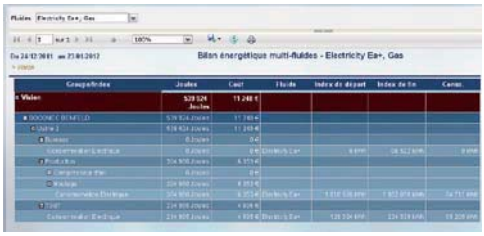

Load curves

On this page it is possible to view the graphs and average power value charts or the indexes over the selected period.

verte_026_a_1_gb_cat

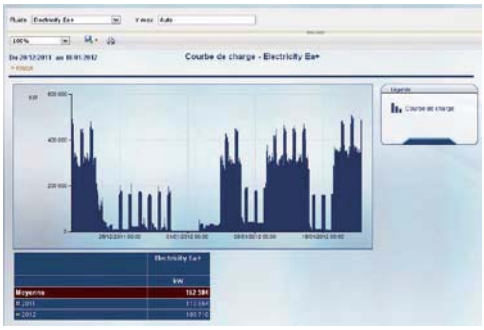

Alerts

Different types of notifications can be managed:
- alarms released by the DIRIS A,
- alarms about index differences,
- value alarms about the average, minimum and maximum currents, voltage and power values reported.

E-mail alerts are sent to users by means of a message server.
Four web pages arealso available to view:
- alarms in progress,
- alarms recorded,
- statistics on a specific alarm,
- alarm notifications.

Tools

They give access to the various tools needed for the correct operation of the software as well as to a specific tool to create curves from the log file.
Example:
Curve for following up electricity consumption, external temperature and load curves over a selected period.

verte_029_a_1_gb_cat

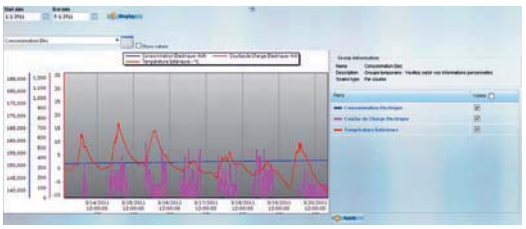



ENERGY REPORTING software

Supervision

For easy supervision of your multi-utility energy consumption

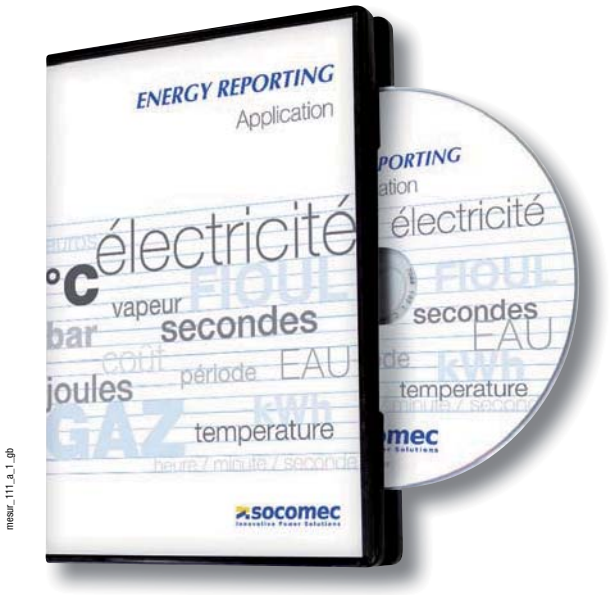

mesur_111_a_1_gb

Function

Designed for simple and regular supervision of your multi-utility energy consumption, the **ENERGY REPORTING** software solution lets users keep a close check on possible energy saving opportunities, whatever the energy (electricity, water, air, gas, etc.). Cost-effective and easy to install, the ENERGY REPORTING software solution helps you take your first step toward intelligent energy consumption.

Applications

The ENERGY REPORTING software gives you:

- periodic supervision of multi-utility energy (electricity, water, gas, etc.),
- verification of consumption on demand.

Key features of the software solution:

- easy to install and configure,
- reports for practical use, adapted to users' requirements (personalisation of units, inter-index calculation, grouping of measuring devices, etc.),
- reports that can be exploited by any IT supervision system thanks to its universal "csv" format,
- reports generated even when you quit the programme, which helps you avoid monopolising computer resources.

ENERGY REPORTING is compatible with the **COUNTIS** and **DIRIS** ranges as well as other devices available on the market (see: general features).

Being able to adapt to the sites' characteristics means having greater control over your energy savings. Check out a brief selection of the ENERGY REPORTING functionalities:

Industry

- Evolution of energy consumption over hourly periods depending on the company's workload.
- Situation of consumption before undertaking any action.
- Cost allocation of consumption depending on your criteria: use or location of buildings, type of energy, etc.
- Data insertion in your company's energy reports.
- Automatic supervision of consumption to help raise user awareness.

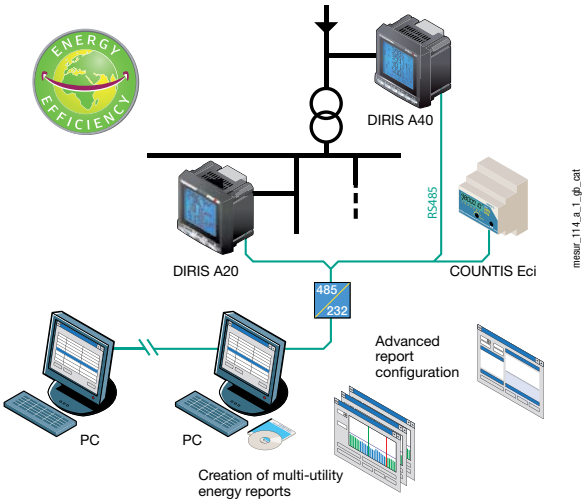

mesur_114_a_1_gb_cat

Rented premises

- Consumption over a given period to be included in global charges invoice.
- Verification of actual consumption in relation to an all-inclusive package.

socomec Innovative Power Solutions

General characteristics

Minimum PC requirements

- Windows® OS, XP Service Pack 3 or Vista.
- 1 GHz processor (64 bit compatible).
- 512 MB of RAM.
- 1.5 GB of available hard drive space.
- Screen resolution 1024 x 768.

Communication with connected devices is via Ethernet.

Communication

- Connection type: Ethernet network.
- Supported protocols:
  - Modbus TCP,
  - Modbus RTU over TCP,
  - Modbus RTU.

Compatible measuring devices

ENERGY REPORTING is compatible with the following measuring devices:

- **COUNTIS E53/E33/E34/E43/E44/E63** energy meters,
- **COUNTIS Ci/ECi2/ECi3** pulse concentrators,
- **DIRIS A10/A20/A40/A41/A60** multi-measurement units,
- **DIRIS N** network analysers,

as well as other measuring devices available on the market (please consult us for more information about models).

Languages

Multi-language software, includes the following as standard: English, French, Spanish, German, Italian.

References

Type	ENERGY REPORTING software Reference
Multi-utility energy consumption supervision software	4805 **0003**

Functions

The ENERGY REPORTING software solution has just three easy to use menus:

- Sites / Devices menu: for configuration of sites and measuring devices
- Index menu: for configuration of energy index associated with measuring devices and creation of groups for clear, easy to read data
- Reports menu: for configuration of reports created in the Index menu, for personalised reports based on user requirements

For configuration of sites (Sites / Devices menu)

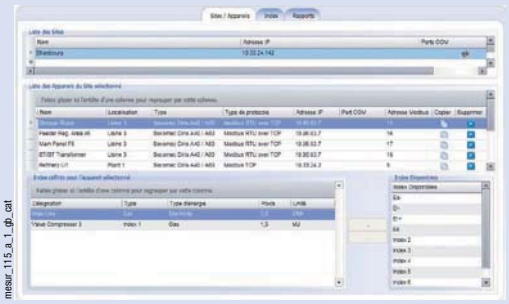
mesur_115_a_1_gb_cat

- Definition of names for sites and IP addresses
- Configuration of communication ports
- Device configuration
- Definition of index for each device: name, type of energy, pulse values, etc.

Definition of groups and index (Index menu)

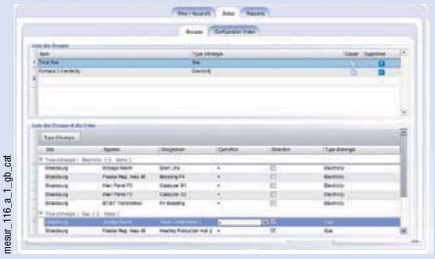
mesur_116_a_1_gb_cat

- Creation of groups of devices for easy data exploitation
- Choice of operations on the index within each group: addition, subtraction

Personalisation of reports (Reports menu)

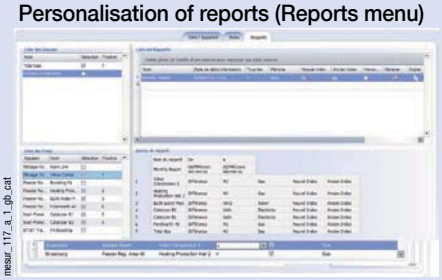
mesur_117_a_1_gb_cat

- Choice of name and frequency of the report
- Choice of SAVE options

Check it out!

VERTELIS
ENERGY PERFORMANCE SOLUTIONS

VERTELIS Supervision

Opt for sustainable energy savings by choosing the fully customisable energy efficiency solution… from SOCOMEC.

VERTELIS is a modular offer comprising dedicated software and measuring devices designed to meet your requirements, as well as a full professional range of pre and after-sales services.
For further information, please contact your SOCOMEC branch office.



Communication accessories

Connecting the RS485 link

RS232 / RS485 interface

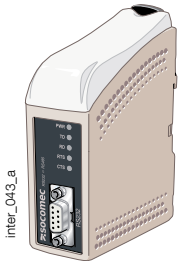

Function

If the PC is equipped with an RS232 port, this interface will convert RS232 signal into RS485. 31 devices can be connected to the interface over a distance of 1200 m at 9600 bauds.

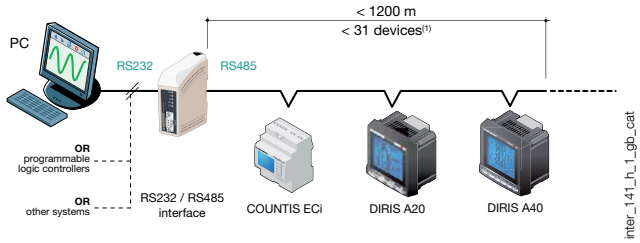

(1) Beyond these characteristics, use a " RS422 / RS485 repeater".

References

Auxiliary power supply U_s	Frequency	Reference
95 … 240 VAC / 110 … 250 VDC	50 Hz	4899 **0100**

USB / RS485 interface



Function

If the PC is not equipped with a serial port, this interface can be connected via a USB port to obtain an RS485 communication port. Recommended for local use and not for permanent installation.

This product is recommended for local, non-permanent use.

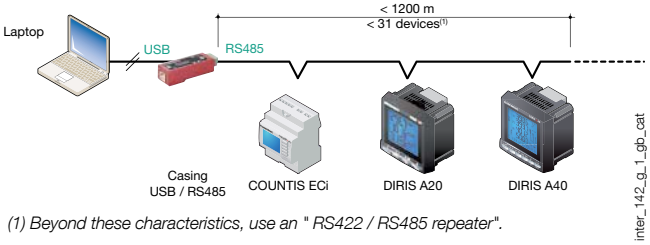

(1) Beyond these characteristics, use an " RS422 / RS485 repeater".

References

Description of accessories	Reference
External USB / RS485 interface unit	4899 **0110**

RS422 / RS485 repeater

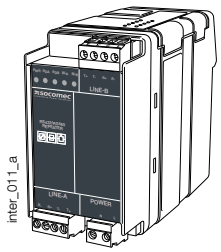

Function

In some applications the maximum distance and/ or the maximum number of devices can be exceeded. One solution to this technical restriction is to install an interface which amplifies the signal over a further 1200 m (at 9600 bauds) for 31 devices.

In addition, this allows a star local area network to be created (1 to 2). This means it is possible to reduce the length of cable required to connect the devices by avoiding back and forth cabling.

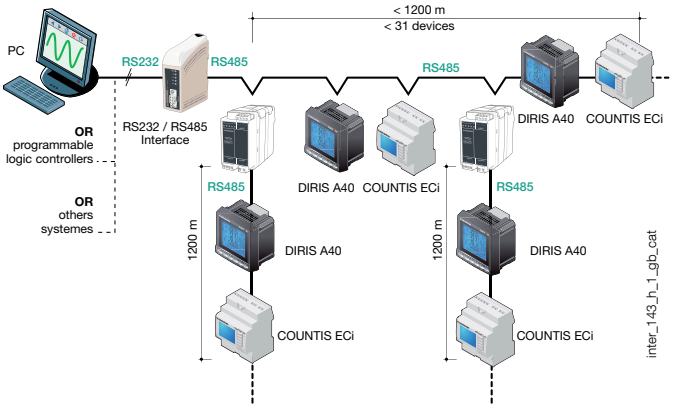

References

Auxiliary power supply U_s	Frequency	Reference
95 … 240 VAC / 110 … 250 VDC	50 Hz	4899 **0120**

socomec Innovative Power Solutions

Using the telephone network (RTCModem / RS232 - RS485)

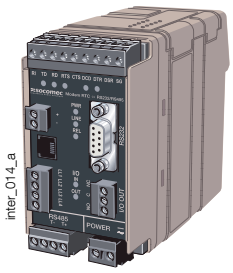

Function

On some sites, it is impossible to connect all the DIRIS's using a single cable. Indeed, the distances may be such that the investment would be too costly. In this case, a modem may be used.

This modem can be configured as a master (RS232: connected directly to PC) or slave (RS485: connected to slave devices, via network).

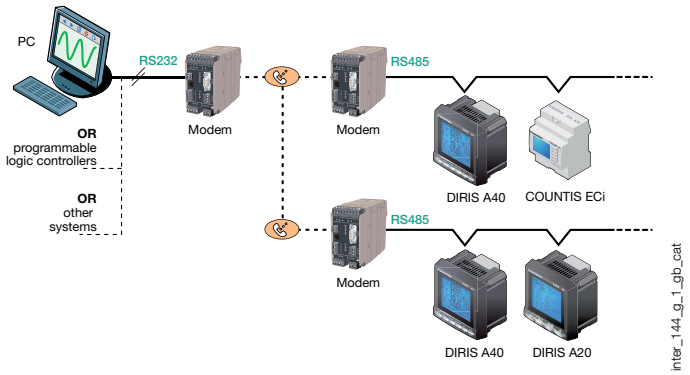

References

Auxiliary power supply U_s	Frequency	Reference
22 … 240 VAC / 12 … 48 VDC	50 Hz	4899 **0200**

Using the Ethernet network (Ethernet / RS232-RS485 interface)



Function

This interface enables RS485 slave devices to be connected to an Ethernet network.

These interfaces can be configured differently to suit other architectures.

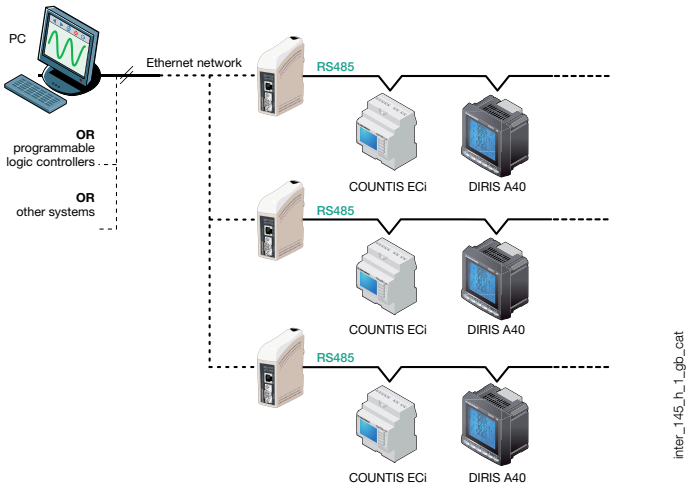

References

Auxiliary power supply U_s	Frequency	Reference
230 VAC / 12 … 48 VDC	50 Hz	4899 **0300**



Current transformers

Measurement devices

from 5 to 5000 A



Three-phase transformer



Bar-through transformer

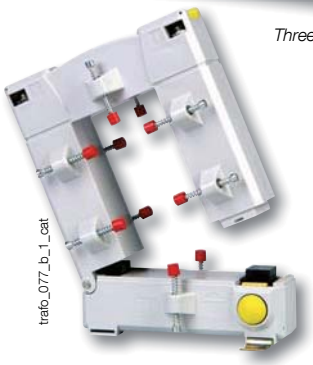

Sectioned Split-core transformer



Cable-through transformer

Function

SOCOMEC current transformers deliver to the secondary a standard current proportional to the primary current and adapted to the rating of the associated device. They are equipped as standard with removable terminal covers and double terminals allowing the secondary to be short-circuited without any risk.

They are mounted using two screw-on metal brackets or, in certain cases, by a clip-on DIN-rail fastener. The connections are made by screws or by fast-on terminals.

- Accuracy class: 0.2S - 0.5 or 1.
- Dielectric quality: 3 kV - 50 Hz - 1 min.
- Usage frequency: 50 - 60 Hz.
- Permanent overload: 1.2 In.
- Insulation class: E (120 °C).

Advantages

An adapted accuracy class

In order to get the best of your DIRIS multifunction meters and COUNTIS energy meters, we can provide current sensors with the following accuracy classes:
0.25; 0.5; 1 or 3.

A wide range of ratings and dimensions

Your measurement process can be optimised whatever your needs in terms of ratings, space requirements, conductor sizing or accuracy class. A wide range of combinations are available (fitted as standard or upon request).

An easy and rapid mounting

Current transformers are adapted to any type of mounting: edgewise or flat mounting, DIN-rail or back-plate mounting. Implementation is easy and rapid.

The solution for

> Industry.
> Service sector.



Strong points

> An adapted accuracy class.
> A wide range of ratings and dimensions.
> An easy and rapid mounting.

Conformity to standards

> IEC 61869-2
> IEC 61439-1

Other products

SOCOMEC also offer customised solutions:

> 1 A secondary.
> Double or triple primary ratio.
> Voltage transformer.
> Summation.

Composition of the range

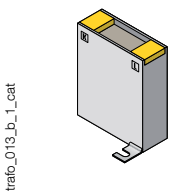

Primary wound moulded case CT

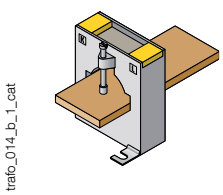

Bar or cable-through CT

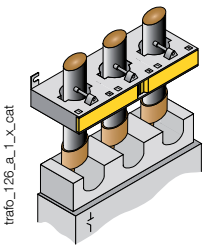

Bar or cable-through three-phase CT

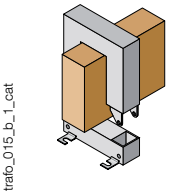

Bar-through split-core CT

Primary wound moulded case CT

References

Primary	Secondary[1]	TRB 60 Class 0.5	TRB 60 Reference	TRB 70 Class 0.5	TRB 70 Reference	T2RB 115 Class 0.2s	T2RB 115 Reference	TRB 135 Class 0.5	TRB 135 Reference
5 A	5 A	2.5 VA	192 **x 0505**	10 VA	192T **0521**				
10 A	5 A	2.5 VA	192T **0510**	10 VA	192T **0522**				
15 A	5 A	2.5 VA	192T **0515**	10 VA	192T **0523**				
20 A	5 A	2.5 VA	192T **0520**	10 VA	192T **0524**				
25 A	5 A			10 VA	192T **0525**	7.5 VA	192U **0402**	10 VA	192T **0603**
30 A	5 A			5 VA	192T **0530**	7.5 VA	192U **0403**	10 VA	192T **0607**
40 A	5 A			5 VA	192T **0540**	7.5 VA	192U **0404**	10 VA	192T **0604**
50 A	5 A			5 VA	192T **0550**	7.5 VA	192U **0405**	10 VA	192T **0605**
60 A	5 A					7.5 VA	192U **0406**	10 VA	192T **0606**
75 A	5 A					7.5 VA	192U **0407**	10 VA	192T **0608**
80 A	5 A					7.5 VA	192U **0408**	10 VA	192T **0609**
100 A	5 A							10 VA	192T **0610**
125 A	5 A					7.5 VA	192U **0412**	10 VA	192T **0612**
150 A	5 A					7.5 VA	192U **0415**	10 VA	192T **0615**

(1) Secondary 1 A: on request.

Accessories

Description of accessories	TRB 60 Reference	TRB 70 Reference		TRB 135 Reference
DIN-rail mounting	192T **0003**	192T **0005**[1]		
Sealable cover	192T **0105**	192T **0103**		192T **0101**[2]

(1) Not available for 50 A rating
*(2) For 125 and 150 A ratings, use reference 192T **0103***

CT Plug-in transducer (CEA-VA)

Power supply	Output	TRB 60 Reference	TRB 70 Reference
Self-supplied	0-20 mA/0-10 VDC	192Y **0015**	192Y **0025** [1]
230 VAC	0-20 mA/0-10 VDC	192Y **0215**	192Y **0225** [1]
24 VDC	0-20 mA/0-10 VDC	192Y **0115**	192Y **0125** [1]

(1) Not available for 50 A rating

CT Plug-in transducer (CEA-VA4)

Power supply	Output	TRB 60 Reference	TRB 70 Reference
230 VAC	4-20 mA/0-10 VDC	192Y **0255**	192Y **0265** [1]
24 VDC	4-20 mA/0-10 VDC	192Y **0155**	192Y **0165** [1]

(1) Not available for 50 A rating

Certificate of performance

Each class 0.2s current transformer is supplied with an individual certificate of performance, attesting to its accuracy.

Primary wound moulded case CT (continued)

Dimensions

TRB 60

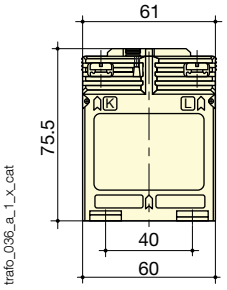

TRB 70

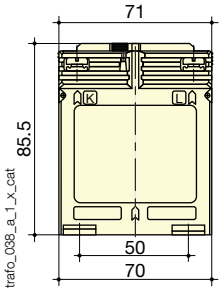

TRB 70 (for 40 and 50 A)

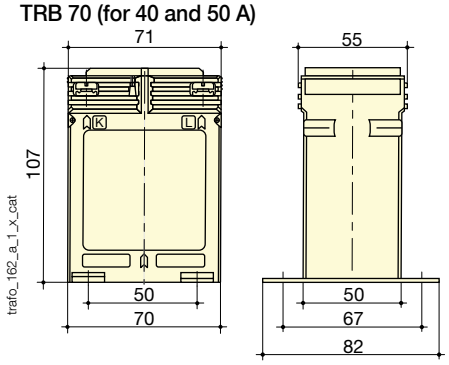

T2RB115

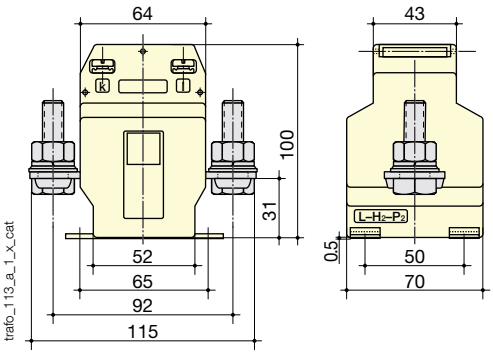

TRB 135

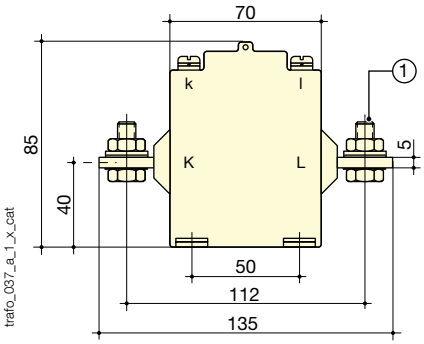

1. 25 to 100 A: M8 x 25

TRB 135 (for 125 and 150 A)

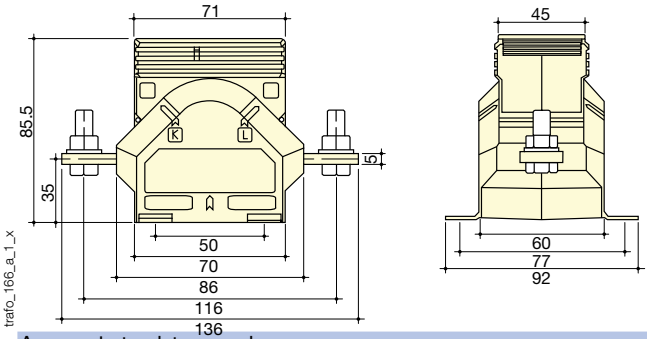

1. 25 to 100 A: M8 x 25

Coiled primary CT	TRB 60	TRB 70 (1)	T2RB 115	TRB 135 (2)
H x W x D (mm)	75,5 x 61 x 35	85,5 x 71 x 45	115 x 100 x 70	85 x 135 X 60
DIN-rail mounting	yes	yes	no	no

(1) Dimensions are different for TRB 70 with 40 and 50 A ratings.
(2) Dimensions are different for TRB 135 with 125 and 150 A ratings.

Associated transducers



Transducer to be associated with adapted current transformers:
- *Class 0.5.*
- *Input: 1 or 5 A.*
- *Output:*
  - *0-20 mA, 0-10 V (type CEA-VA)*
  - *4-20 mA, 0-10 V (type CEA-VA4)*
- *Self-supplied or auxiliary power supply 24 VDC or 230 VAC.*
- *3 sizes according to the CT: type 1, 2 or 3.*

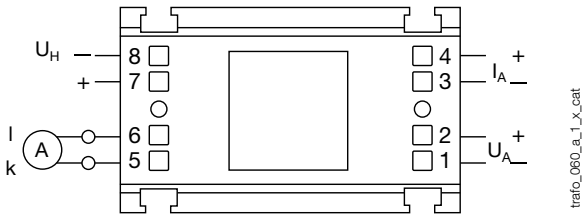

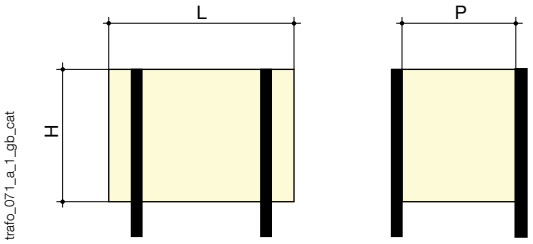

Dimensions (mm)

Converter	For CT	Height (mm)	Width (mm)	Depth (mm)
Type 1	TRB 60	50,5	60	32,5
Type 2	TRB 70	50	70	43

Cable-through CT

References

Primary	Secondary[1]	TCA 14 Class 1	TCA 14 Reference	TCA 21 Class 1	TCA 21 Class 0.5	TCA 21 Reference	TCA 22 Class 1	TCA 22 Reference	T2CA 225 Class 0.2s	T2CA 225 Reference
40 A	5 A	1	192T **1404**							
50 A	5 A	1	192T **1405**							
60 A	5 A	1.5	192T **1406**	1 VA		192T **2006**				
75 A	5 A	1.5	192T **1407**	1.5 VA		192T **2007**				
80 A	5 A			1.5 VA		192T **2008**				
100 A	5 A	2.5	192T **1410**		1.5 VA	192T **2010**	1 VA	192T **2022**		
125 A	5 A	2.5	192T **1412**		1.5 VA	192T **2012**				
150 A	5 A	2.5	192T **1415**		1.5 VA	192T **2015**	1.5 VA	192T **2023**	1.5 VA	192U **2215**
200 A	5 A				2.5 VA	192T **2020**	2.5 VA	192T **2024**	2.5 VA	192U **2220**
250 A	5 A				2.5 VA	192T **2016**	3.75 VA	192T **2025**	5 VA	192U **2225**
300 A	5 A				2.5 VA	192T **2017**	3.75 VA	192T **2030**	5 VA	192U **2230**
400 A	5 A						5 VA	192T **2034**	5 VA	192U **2240**
500 A	5 A						5 VA	192T **2035**[2]	10 VA	192U **2250**
600 A	5 A						5 VA	192T **2036**[2]	10 VA	192U **2260**

(1) Secondary 1 A: on request. *(2) Dimensions of T2CA 225*

Accessories

Description of accessories	TCA 14 Reference	TCA 21 Reference	TCA 22 Reference	T2CA 225 Reference
DIN-rail mounting	192T **0006**	192T **0006**	192T **0007**	192T **0003**
Copper guide tube Ø 8.5 mm[1]		192T **0020**		
Copper guide tube Ø 12.5 mm[1]		192T **0021**	192T **0023**	
Copper guide tube Ø 16.5 mm[1]			192T **0024**	
Sealable cover				192T **0105**

(1) For centralising cables within the CT.

Dimensions

TCA 14

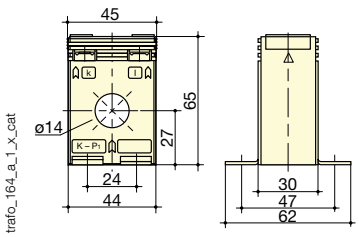

TCA 21

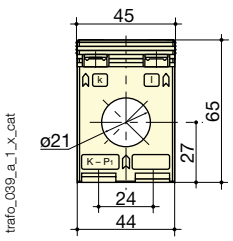

TCA 22

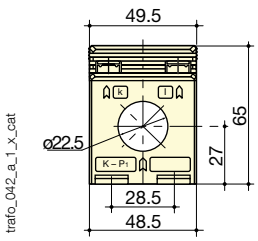

T2CA 225

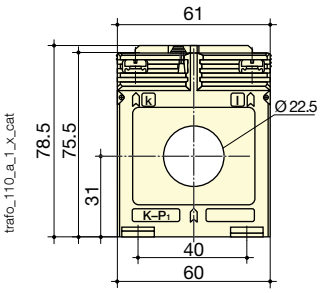

Cable-through CT	TCA 14	TCA 21	TCA 22	T2CA 225[1]
Ø cable (mm)	14	21	22.5	22.5
H x W x D (mm)	65 x 45 x 30	65 x 45 x 30	65 x 49.5 x 35	78.5 x 61 x 35
DIN-rail mounting	yes	yes	yes	yes

(1) Dimensions are different for 600 A: 78.5x61x35.

Current transformers

Measurement devices

from 5 to 5000 A

Bar or cable-through CT

References

Primary	Secondary[1]	TCB 17-20		TCB 26-30			T2CB 26-30		TCB 28-30		
		Class 1	Reference	Class 0.5	Class 1	Reference	Class 0.2s	Reference	Class 0.5	Class 1	Reference
50 A	5 A				1 VA	192T **2305**					
60 A	5 A	1 VA	192T **2106**		1 VA	192T **2306**					
75 A	5 A	1 VA	192T **2107**		1.5 VA	192T **2307**					
80 A	5 A	1.25 VA	192T **2108**		1.5 VA	192T **2308**				1.25 VA	192T **2408**
100 A	5 A	1.5 VA	192T **2110**	1.5 VA		192T **2310**				1.5 VA	192T **2410**
125 A	5 A	1.5 VA	192T **2112**	1.5 VA		192T **2312**				2.5 VA	192T **2412**
150 A	5 A	2.5 VA	192T **2115**	1.5 VA		192T **2315**	1.5 VA	192U **2315**		2.5 VA	192T **2415**
160 A	5 A	2.5 VA	192T **2116**								
200 A	5 A	2.5 VA	192T **2120**	2.5 VA		192T **2320**	2.5 VA	192U **2320**	2.5 VA		192T **2420**
250 A	5 A	5 VA	192T **2125**	5 VA		192T **2325**	2.5 VA	192U **2325**	2.5 VA		192T **2425**
300 A	5 A	5 VA	192T **2130**	5 VA		192T **2330**	5 VA	192U **2330**	2.5 VA		192T **2430**
400 A	5 A	5 VA	192T **2140**	5 VA		192T **2340**	5 VA	192U **2340**	5 VA		192T **2440**
500 A	5 A			5 VA		192T **2350**	5 VA	192U **2350**	5 VA		192T **2450**
600 A	5 A			5 VA		192T **2360**	5 VA	192U **2360**			
750 A	5 A			5 VA		192T **2375**	5 VA	192U **2375**			

(1) Secondary 1 A: on request.

Primary	Secondary[1]	TCB 26-40		TCB 32-40			T2CB 32-40	
		Class 1	Reference	Class 0.5	Class 1	Reference	Class 0.2s	Reference
75 A	5 A				1.5 VA	192T **4007**		
100 A	5 A	1.5 VA	192T **3210**	1.5 VA		192T **4010**		
125 A	5 A	2.5 VA	192T **3212**	1.5 VA		192T **4012**		
150 A	5 A	2.5 VA	192T **3215**	2.5 VA		192T **4015**		
160 A	5 A	2.5 VA	192T **3216**					
200 A	5 A	2.5 VA	192T **3220**	5 VA		192T **4020**	2.5 VA	192U **4020**
250 A	5 A	2.5 VA	192T **3225**	5 VA		192T **4025**	5 VA	192U **4025**
300 A	5 A	5 VA	192T **3230**	10 VA		192T **4030**	5 VA	192U **4030**
400 A	5 A	5 VA	192T **3240**	10 VA		192T **4040**	5 VA	192U **4040**
500 A	5 A	5 VA	192T **3250**	10 VA		192T **4050**	5 VA	192U **4050**
600 A	5 A	5 VA	192T **3260**	10 VA		192T **4060**	5 VA	192U **4060**
750 A	5 A	10 VA	192T **3275**	10 VA		192T **4075**	5 VA	192U **4075**
800 A	5 A			10 VA		192T **4080**		
1000 A	5 A			10 VA		192T **4090**		

(1) Secondary 1 A: on request.

Accessories

Description of accessories	TCB 17-20 Reference	TCB 26-30 Reference	TCB 26-40 Reference	TCB 32-40 Reference
DIN-rail mounting	192T **0007**	192T **0003**	192T **0003**	192T **0005**
Sealable cover		192T **0105**	192T **0105**	192T **0103**

CT Plug-in transducer (CEA-VA)

Power supply	Output	TCB 26-30 Reference	TCB 26-40 Reference	TCB 32-40 Reference
Autoalimenté	0-20 mA/0-10 VDC	192Y **0015**	192Y **0015**	192Y **0035**
230 VAC	0-20 mA/0-10 VDC	192Y **0215**	192Y **0215**	192Y **0235**
24 VDC	0-20 mA/0-10 VDC	192Y **0115**	192Y **0115**	192Y **0135**

CT Plug-in transducer (CEA-VA4)

Power supply	Output	TCB 26-30 Reference	TCB 26-40 Reference	TCB 32-40 Reference
230 VAC	4-20 mA/0-10 VDC	192Y **0255**	192Y **0255**	192Y **0275**
24 VDC	4-20 mA/0-10 VDC	192Y **0155**	192Y **0155**	192Y **0175**

socomec Innovative Power Solutions

References

Primary	Secondary(1)	TCB 44-50 Class 0.5	TCB 44-50 Reference	TCB 44-63 Class 0.5	TCB 44-63 Reference	T2CB 44-63 Class 0.2s	T2CB 44-63 Reference
150 A	5 A	1.5 VA	192T **5015**				
200 A	5 A	2.5 VA	192T **5020**	1.5 VA	192T **6420**		
250 A	5 A	5 VA	192T **5025**	1.5 VA	192T **6425**		
300 A	5 A	5 VA	192T **5030**	2.5 VA	192T **6430**	5 VA	192U **6430**
400 A	5 A	10 VA	192T **5040**	5 VA	192T **6440**	5 VA	192U **6440**
500 A	5 A	10 VA	192T **5050**	10 VA	192T **6450**	10 VA	192U **6450**
600 A	5 A	10 VA	192T **5060**	10 VA	192T **6460**	10 VA	192U **6460**
750 A	5 A	10 VA	192T **5075**	10 VA	192T **6475**	10 VA	192U **6475**
800 A	5 A	15 VA	192T **5080**	10 VA	192T **6480**		
1000 A	5 A	15 VA	192T **5090**	15 VA	192T **6490**	10 VA	192U **6490**
1200 A	5 A	15 VA	192T **5092**	15 VA	192T **6492**	10 VA	192U **6492**
1250 A	5 A	15 VA	192T **5095**	15 VA	192T **6493**	10 VA	192U **6493**
1500 A	5 A			15 VA	192T **6495**	10 VA	192U **6495**
1600 A	5 A			15 VA	192T **6494**		

(1) Secondary 1 A: on request.

Primary	Secondary(1)	TCB 55-80 Class 0.5	TCB 55-80 Reference	TCB 85-100 Class 0.5	TCB 85-100 Reference	TCB 100-125 Class 0.5	TCB 100-125 Reference
400 A	5 A	2.5 VA	192T **8140**				
500 A	5 A	5 VA	192T **8150**				
600 A	5 A	5 VA	192T **8160**				
750 A	5 A	10 VA	192T **8175**	2.5 VA	192T **9675**		
800 A	5 A	10 VA	192T **8180**	5 VA	192T **9680**		
1000 A	5 A	15 VA	192T **8190**	10 VA	192T **9690**	5 VA	192T **9590**
1200 A	5 A	15 VA	192T **8192**	10 VA	192T **9692**	10 VA	192T **9592**
1250 A	5 A	15 VA	192T **8193**	15 VA	192T **9693**	10 VA	192T **9593**
1500 A	5 A	15 VA	192T **8195**	15 VA	192T **9695**	15 VA	192T **9595**
1600 A	5 A	15 VA	192T **8194**	15 VA	192T **9694**		
2000 A	5 A	15 VA	192T **8196**	30 VA	192T **9696**	30 VA	192T **9596**
2500 A	5 A			30 VA	192T **9697**	30 VA	192T **9597**
3000 A	5 A			30 VA	192T **9698**	30 VA	192T **9598**

(1) Secondary 1 A: on request.

Accessories

Description of accessories	TCB 44-50 Reference	TCB 44-63 Reference	TCB 55-80 Reference	TCB 85-100 Reference	TCB 100-125 Reference
Sealable cover	192T **0102**	192T **0102**	192T **0102**	192T **0106**	192T **0106**

CT Plug-in transducer (CEA-VA)

Power supply	Output	TCB 44-50 Reference	TCB 44-63 Reference	TCB 55-80 Reference
Self supplied	0-20 mA/0-10 VDC		192Y **0045**	192Y **0045**
230 VAC	0-20 mA/0-10 VDC		192Y **0245**	192Y **0245**
24 VDC	0-20 mA/0-10 VDC		192Y **0145**	192Y **0145**

CT Plug-in transducer (CEA-VA4)

Input	Output	TCB 44-50 Reference	TCB 44-63 Reference	TCB 55-80 Reference
230 VAC	4-20 mA/0-10 VDC		192Y **0285**	192Y **0285**
24 VDC	4-20 mA/0-10 VDC		192Y **0185**	192Y **0185**

Bar or cable-through CT

Dimensions

TCB 17-20

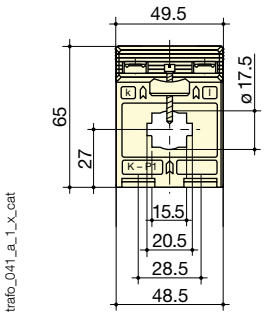

TCB 26-30 and T2CB 26-30

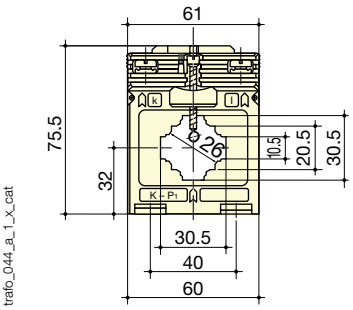

TCB 28-30

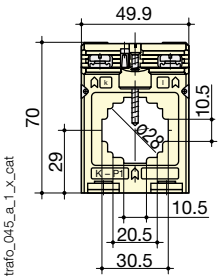

TCB 26-40

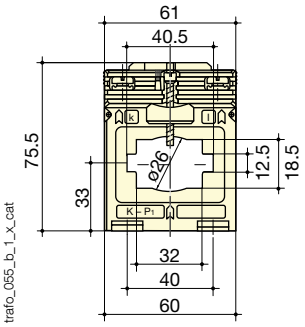

TCB 32-40 and T2CB 32-40

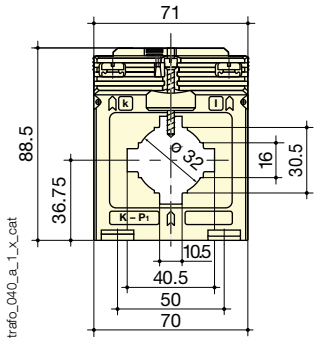

TCB 44-50

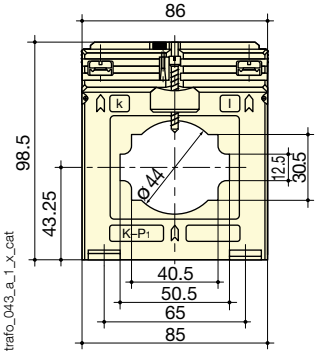

TCB 44-63 and T2CB 44-63

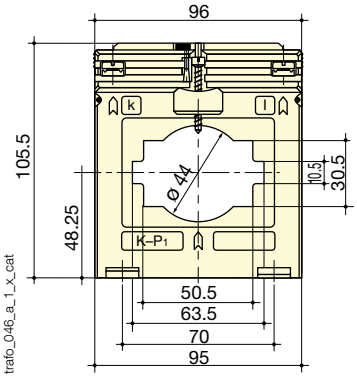

TCB 55-80

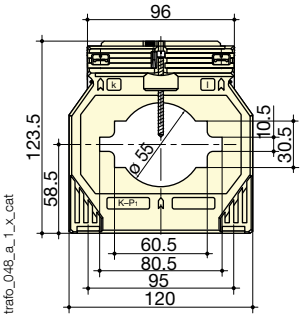

TCB 85-100

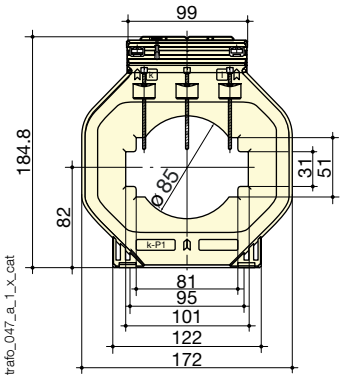

TCB 100-125

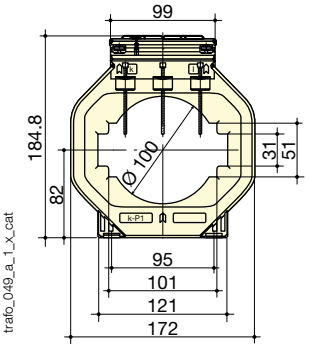

Bar or cable-through CT	TCB 17-20	TCB 26-30	T2CB 26-30	TCB 26-40	TCB 28-30	TCB 32-40	T2CB 32-40
Bar (mm)	20 x 5 (x 1)	30 x 10 (x 1) / 20 x 10 (x 1…2)	30 x 10 (x 1) / 20 x 10 (x 1…2)	40 x 12 (x 1) / 32 x 18 (x 1)	30 x 10 (x 1)	40 x 10 (x 1) / 30 x 5 (x 1…2)	40 x 10 (x 1) / 30 x 5 (x 1…2)
Ø cable (mm)	17.5	26	26	26	28	32	32
H x W x D (mm)	65 x 49.5 x 50	75.5 x 61 x 48	75.5 x 61 x 48	75.5 x 61 x 48	70 x 49.9 x 68	88.5 x 71 x 58	88.5 x 71 x 58
DIN-rail mounting	yes	yes	yes	yes		yes	yes

Bar or cable-through CT	TCB 44-50	TCB 44-63	T2CB 44-63	TCB 55-80	TCB 85-100	TCB 100-125
Bar (mm)	50 x 12 (x 1) / 40 x 10 (x 1…2)	63 x 10 (x 1) / 50 x 10 (x 1…2)	63 x 10 (x 1) / 50 x 10 (x 1…2)	80 x 10 (x 1) / 60 x 30 (x 1) / 60 x 10 (x 1…2)	100 x 10 (x 1…2) / 80 x 10 (x 1…3)	123 x 30 (x 1) / 100 x 10 (x 1…3)
Ø cable (mm)	44	44	44	55	85	100
H x W x D (mm)	98.5 x 86 x 58	105.5 x 96 x 58	105.5 x 96 x 58	123.5 x 120 x 58	184.5 x 172 x 52	184.5 x 172 x 52

Associated transducers





Transducer to be associated with adapted current transformers:

- *Class 0.5.*
- *Input: 1 or 5 A*
- *Output:*
  - *0-20 mA, 0-10 V (model CEA-VA),*
  - *4-20 mA, 0-10 V (model CEA-VA4),*
- *self-supplied or auxiliary power supply 24 VDC or 230 VAC.*
- *3 sizes according to the CT: type 1, 2 or 3.*

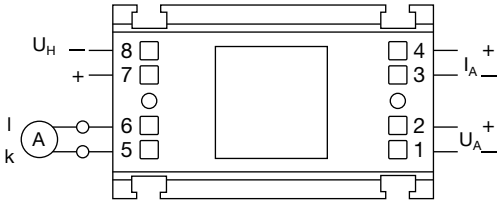

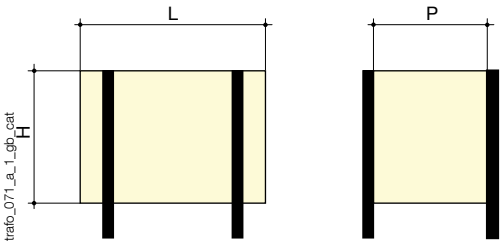

Dimensions (mm)

Converter	For CT	Height (mm)	Width (mm)	Depth (mm)
Type 1	TCB 26-30	50,5	60	32,5
Type 1	TCB 26-40	50,5	60	32,5
Type 2	TCB 32-40	50	70	43
Type 3	TCB 44-63	50,5	95	43
Type 3	TCB 55-80	50,5	95	43

Current transformers

Measurement devices

from 5 to 5000 A

Bar-through CT

References

Primary	Secondary	TBA 60 Class 0.5	TBA 60 Class 1	TBA 60 Reference	TBA 80 Class 0.5	TBA 80 Reference	TBA 100 Class 0.5	TBA 100 Reference	T2BA 100 Class 0.2s	T2BA 100 Reference
200 A	5 A		2.5 VA	192T **7020**						
250 A	5 A	2.5 VA		192T **7025**						
300 A	5 A	2.5 VA		192T **7030**	2.5 VA	192T **7530**				
400 A	5 A	5 VA		192T **7040**	5 VA	192T **7540**				
500 A	5 A	5 VA		192T **7050**	5 VA	192T **7550**				
600 A	5 A	10 VA		192T **7060**	5 VA	192T **7560**	5 VA	192T **8060**		
750 A	5 A	10 VA		192T **7075**	5 VA	192T **7575**	5 VA	192T **8075**		
800 A	5 A	10 VA		192T **7080**	10 VA	192T **7580**	5 VA	192T **8080**		
1000 A	5 A	15 VA		192T **7090**	15 VA	192T **7590**	5 VA	192T **8090**		
1200 A	5 A	15 VA		192T **7092**	15 VA	192T **7592**	10 VA	192T **8092**	5 VA	192U **8092**
1250 A	5 A	15 VA		192T **7093**	15 VA	192T **7593**	10 VA	192T **8093**	5 VA	192U **8093**
1500 A	5 A	15 VA		192T **7095**	15 VA	192T **7595**	15 VA	192T **8095**	5 VA	192U **8095**
1600 A	5 A	15 VA		192T **7094**	15 VA	192T **7594**	15 VA	192T **8094**		
2000 A	5 A				15 VA	192T **7596**	15 VA	192T **8096**	5 VA	192U **8096**
2500 A	5 A						30 VA	192T **8097**	10 VA	192U **8097**
3000 A	5 A						30 VA	192T **8098**(1)	10 VA	192U **8098**
4000 A	5 A						30 VA	192T **8099**(1)		

(1) Dimensions are different for TBA 100 with 3000 and 4000 A primary.

Primary	Secondary	TBA 103 Class 0.5	TBA 103 Reference	T2BA 103 Class 0.2s	T2BA 103 Reference	TBA 127 Class 0.5	TBA 127 Reference	T2BA 127 Class 0.2s	T2BA 127 Reference
400 A	5 A	2.5 VA	192T **9340**			2.5 VA	192T **9740**		
500 A	5 A	2.5 VA	192T **9350**			2.5 VA	192T **9750**		
600 A	5 A	2.5 VA	192T **9360**			2.5 VA	192T **9760**		
750 A	5 A	2.5 VA	192T **9375**			2.5 VA	192T **9775**		
800 A	5 A	5 VA	192T **9380**			5 VA	192T **9780**		
1000 A	5 A	10 VA	192T **9390**	5 VA	192U **9390**	10 VA	192T **9790**		
1200 A	5 A	10 VA	192T **9392**	5 VA	192U **9392**	10 VA	192T **9792**	5 VA	192U **9792**
1250 A	5 A	10 VA	192T **9393**	5 VA	192U **9393**	10 VA	192T **9793**	5 VA	192U **9793**
1500 A	5 A	15 VA	192T **9395**	5 VA	192U **9395**	15 VA	192T **9795**	5 VA	192U **9795**
1600 A	5 A	10 VA	192T **9394**			15 VA	192T **9794**		
2000 A	5 A	15 VA	192T **9396**			15 VA	192T **9796**	5 VA	192U **9796**
2500 A	5 A					15 VA	192T **9797**		
3000 A	5 A					25 VA	182T **9798**(1)		
4000 A	5 A					30 VA	182T **9799**(1)		

(1) Replacement model TRA 127 for this rating.

Accessories

Description of accessories	TBA 60 Reference	TBA 80 Reference	TBA 100 Reference	T2BA 100 Reference	TBA 103 Reference	T2BA 103 Reference	TBA 127 Reference	T2BA 127 Reference
Sealable cover	192T **0102**		192T **0102**	192T **0102**			192T **0102**	192T **0102**

CT Plug-in transducer (CEA-VA)

Power supply	Output	TBA 100 Reference
Self supplied	0-20 mA/0-10 VDC	192Y **0045**
230 VAC	0-20 mA/0-10 VDC	192Y **0245**
24 VDC	0-20 mA/0-10 VDC	192Y **0145**

CT Plug-in transducer (CEA-VA4)

Power supply	Output	TBA 100 Reference
230 VAC	4-20 mA/0-10 VDC	192Y **0285**
24 VDC	4-20 mA/0-10 VDC	192Y **0185**

socomec Innovative Power Solutions

Dimensions

TBA 60

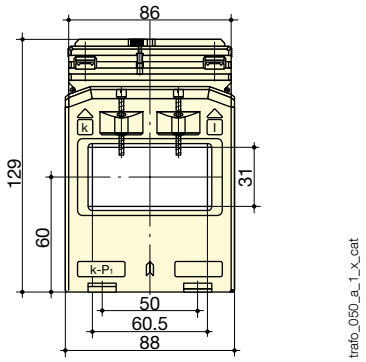

TBA 80

600 à 3000 A

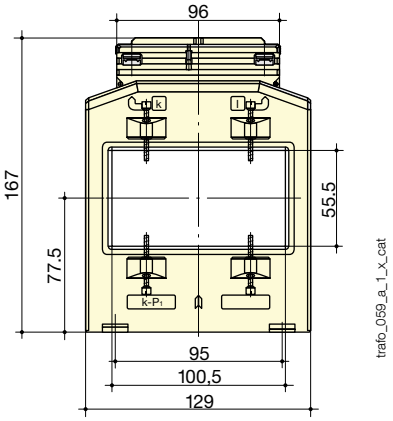

TBA 100 and T2BA 100

4000 A

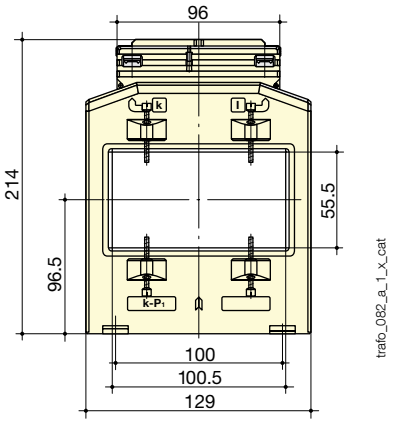

TBA 103 and T2BA 103

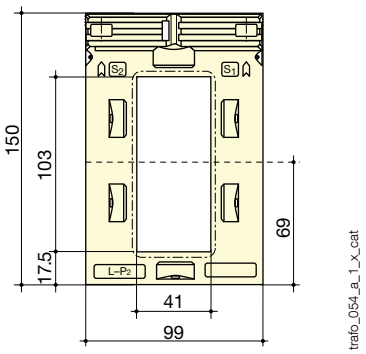

TBA 127 and T2BA 127

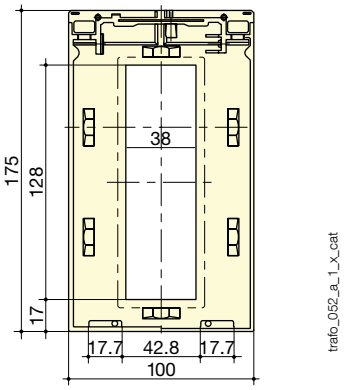

TC à barre passante	TBA 60	TBA 80	TBA 100	T2BA 100	TBA 103	T2BA 103	TBA 127	T2BA 127
Barre (mm)	60 x 30	84 x 34	100 x 55	100 x 55	103 x 41	103 x 41	128 x 38	128 x 38
H x L x P (mm)	129 x 88 x 78	117 x 96 x 68	167 x 129 x 78 (1)	167 x 129 x 78	150 x 99 x 58	150 x 99 x 58	175 x 100 x 55	175 x 100 x 55

(1) TBA 100 avec primaire à 3000 et 4000 A, dimensions différentes.

Three-phase bar or cable-through CT

References

Primary	Secondary(1)	TCB3 18-20 Class 1	TCB3 18-20 Reference	TCB3 22-30 Class 1	TCB3 22-30 Reference
3 x 100 A	3 x 5 A	1 VA	192T **3310**		
3 x 150 A	3 x 5 A	1.25 VA	192T **3315**		
3 x 200 A	3 x 5 A	1.5 VA	192T **3320**		
3 x 250 A	3 x 5 A	2.5 VA	192T **3325**	2.5 VA	192T **3425**
3 x 300 A	3 x 5 A			3.75 VA	192T **3430**
3 x 400 A	3 x 5 A			5 VA	192T **3440**
3 x 500 A	3 x 5 A			5 VA	192T **3450**
3 x 600 A	3 x 5 A			5 VA	192T **3460**

(1) Secondary 1 A: on request.

Dimensions

TCB3 18-20

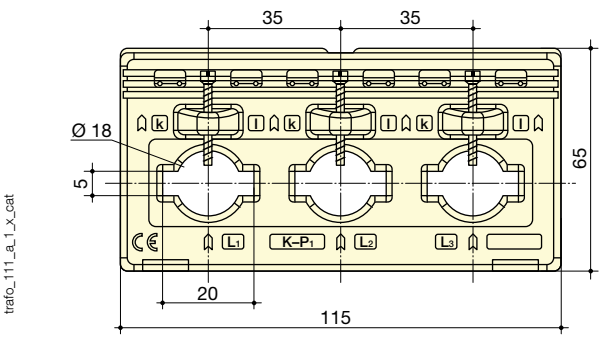

TCB3 22-30

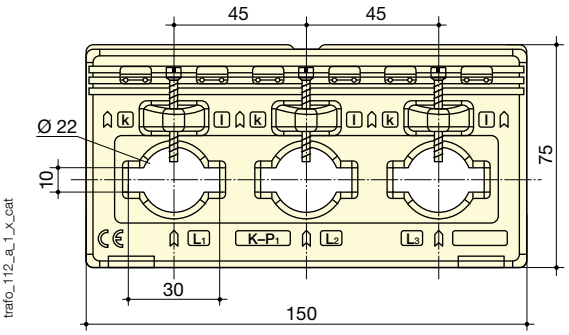

Three-phase bar or cable-through CT	TCB3 18-20	TCB3 22-30
Ø cable (mm)	18	22
Bar	20 x 5	30 x 10
H x W x D (mm)	115 x 65 x 37	150 x 75 x 37
DIN-rail mounting	no	no

References

Primary	Secondary(1)	TCA 13 - 3P	
		Class 1	Reference
3 x 50 A	5 A	1 VA	192T **1905**
3 x 60 A	5 A	1.25 VA	192T **1906**
3 x 75 A	5 A	1.5 VA	192T **1907**
3 x 80 A	5 A	1.5 VA	192T **1908**
3 x 100 A	5 A	2.5 VA	192T **1910**
3 x 125 A	5 A	2.5 VA	192T **1912**
3 x 150 A	5 A	2.5 VA	192T **1915**
3 x 160 A	5 A	2.5 VA	192T **1916**

(1) Secondary 1 A: on request.

Dimensions

TCA 13 — 3P

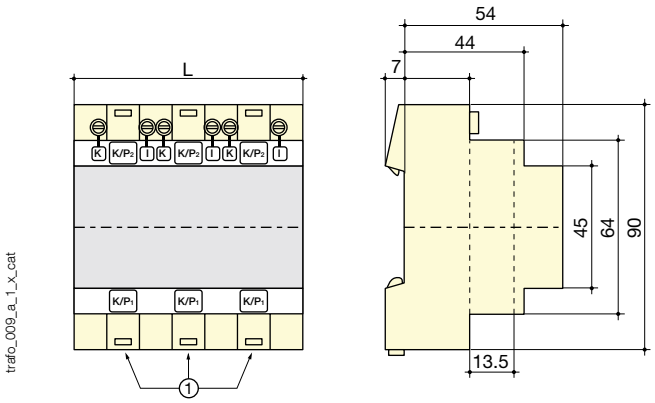

(1) Cable-through aperture Ø 13.5mm.

Number of modules	Front degree of protection	Terminal block degree of protection	W (mm)	Mounting
6	IP65	IP20	105	35 mm DIN-rail

Current transformers

Measurement devices

from 5 to 5000 A

Split-core CT

References

		TO 23			TO 58			TO 812			TO 816	
Primary	Secondary	Class 1	Class 3	Reference	Class 0.5	Class 1	Reference	Class 0.5	Class 1	Reference	Class 0.5	Reference
100 A	5 A		1.25 VA	192T **4601**								
150 A	5 A		1.5 VA	192T **4602**								
200 A	5 A		2.5 VA	192T **4603**								
250 A	5 A	1.5 VA		192T **4604**		1.5 VA	192T **4625**		1.5 VA	192T **4725**		
300 A	5 A	3.75 VA		192T **4605**		2.5 VA	192T **4630**		2.5 VA	192T **4730**		
400 A	5 A	5 VA		192T **4606**	1 VA		192T **4640**		2.5 VA	192T **4740**		
500 A	5 A				2.5 VA		192T **4650**	2.5 VA		192T **4750**		
600 A	5 A				2.5 VA		192T **4660**	2.5 VA		192T **4760**		
750 A	5 A				2.5 VA		192T **4675**	2.5 VA		192T **4775**		
800 A	5 A				2.5 VA		192T **4680**	2.5 VA		192T **4780**		
1000 A	5 A				5 VA		192T **4610**	5 VA		192T **4710**	10 VA	192T **4810**
1250 A	5 A							7.5 VA		192T **4712**	10 VA	192T **4812**
1500 A	5 A							7.5 VA		192T **4715**	10 VA	192T **4815**
1600 A	5 A										10 VA	192T **4814**
2000 A	5 A										10 VA	192T **4820**
2500 A	5 A										10 VA	192T **4825**
3000 A	5 A										15 VA	192T **4830**
4 000 A	5 A										15 VA	192T **4840**
5 000 A	5 A										15 VA	192T **4850**

Dimensions

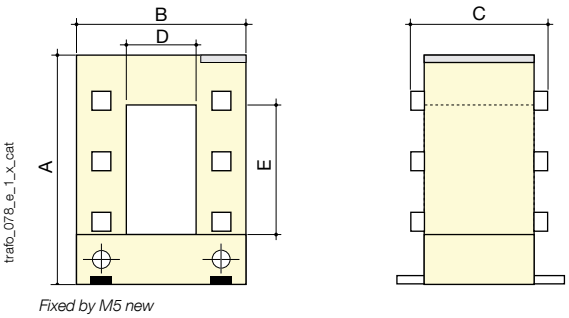

Fixed by M5 new

Dimensions (mm)

Type	A (mm)	B (mm)	C (mm)	D (mm)	E (mm)
TO 23	106	93	58	23	33
TO 58	158	125	58	55	85
TO 812	198	155	58	85	125
TO 816	243	195	79	85	165

Split-core CT	TO 23	TO 58	TO 812	TO 816
H x W x D (mm)	106 x 93 x 58	158 x 125 x 58	198 x 155 x 58	243 x 195 x 75

socomec Innovative Power Solutions

Summation CT

Reference

Primary	Secondary	BSA 02 Reference	BSA 03 Reference	BSA 04 Reference
5 + 5/5 A	5 A	192T **0802**		
5 + 5 + 5/5 A	5 A		192T **0803**	
5 + 5 + 5 + 5/5 A	5 A			192T **0904**

Dimensions

BSA 02 et BSA 03

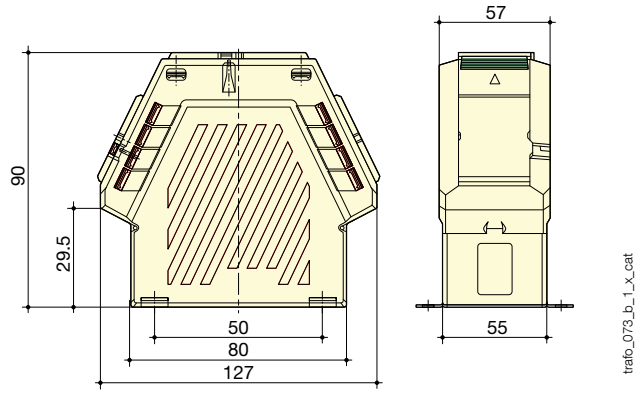

BSA 04

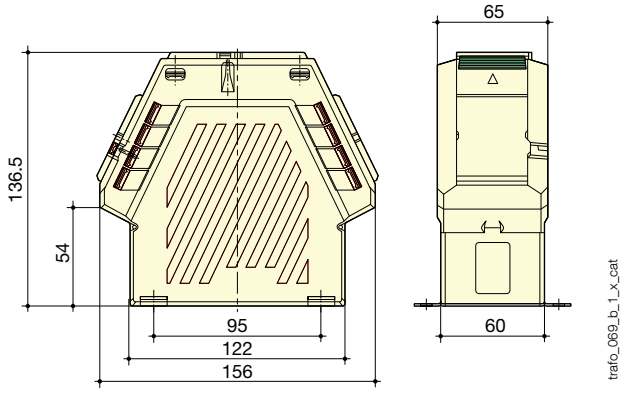

Summation CT	BSA 02	BSA 03	BSA 04
H x W x D (mm)	90 x 127 x 57	90 x 127 x 57	136.5 x 156 x 65
DIN-rail mounting	no	no	no

Reference list

References	Pages
182T **4xxx**	88
182T **9xxx**	106
192J **8015**	35
192J **9011**	43
192J **9013**	41
192J **9021**	43
192J **9022**	43
192J **9023**	41
192J **9050**	43
192J **9100**	37
192J **9110**	39
192T **0003**	99, 101, 102
192T **0005**	99, 102
192T **0006**	101
192T **0007**	101, 102
192T **002x**	101
192T **0101**	99
192T **0102**	103, 106
192T **0103**	99, 102
192T **0105**	99, 101, 102
192T **0106**	103
192T **05xx**	99
192T **06xx**	99
192T **08xx**	111
192T **09xx**	111
192T **14xx**	101
192T **19xx**	109
192T **20xx**	101
192T **21xx**	102
192T **23xx**	102
192T **24xx**	102
192T **32xx**	102
192T **33xx**	108
192T **34xx**	108
192T **40xx**	102
192T **46xx**	110

References	Pages
192T **47xx**	110
192T **48xx**	110
192T **5xxx**	103
192T **6xxx**	103
192T **7xxx**	106
192T **80xx**	106
192T **81xx**	103
192T **93xx**	106
192T **95xx**	103
192T **96xx**	103
192T **97xx**	106
192U **0xxx**	99
192U **22xx**	101
192U **23xx**	102
192U **4xxx**	102
192U **6xxx**	103
192U **8xxx**	106
192U **9xxx**	106
192Y **0015**	99, 102
192Y **0025**	99
192Y **0035**	102
192Y **0045**	103, 106
192Y **0115**	99, 102
192Y **0125**	99
192Y **0135**	102
192Y **0145**	103, 106
192Y **0155**	99, 102
192Y **0165**	99
192Y **0175**	102
192Y **0185**	103, 106
192Y **0215**	99, 102
192Y **0225**	99
192Y **0235**	102
192Y **0245**	103, 106
192Y **0255**	99, 102
192Y **0265**	99

References	Pages
192Y **0275**	102
192Y **0285**	103, 106
4805 **0003**	95
4825 **001x**	47
4825 **0080**	55, 87
4825 **0082**	55, 87
4825 **0088**	55, 61, 67, 71
4825 **0089**	55, 61, 67, 71
4825 **0090**	61, 67, 87
4825 **0092**	61, 67, 71, 87
4825 **0093**	61, 67, 87
4825 **0094**	61, 67, 87
4825 **0097**	61, 87
4825 **01xx**	51
4825 **0200**	55
4825 **0201**	61
4825 **0202**	61
4825 **0203**	61, 67, 71, 87
4825 **0204**	61, 67, 71, 87
4825 **0205**	61, 87
4825 **0206**	61, 67, 87
4825 **0207**	67
4825 **0208**	61, 67
4825 **0209**	61, 67, 73
4825 **021x**	71
4825 **1xxx**	61
4825 **4xxx**	87
4826 **xxxx**	83
4850 **3000**	23
4850 **3001**	23
4850 **3002**	23
4850 **3003**	25
4850 **3004**	25
4850 **3005**	27
4850 **3006**	27
4850 **3007**	27

References	Pages
4850 **3008**	29
4850 **3009**	29
4850 **3010**	31
4850 **3011**	31
4850 **3012**	27
4850 **3013**	27
4850 **3014**	29
4850 **3015**	29
4850 **3016**	33
4850 **3017**	29
4850 **3019**	21
4850 **3020**	21
4850 **3025**	27
4850 **3026**	27
4850 **3027**	29
4850 **3028**	29
4850 **3029**	21
4850 **3030**	21
4850 **3031**	23
4850 **3032**	23
4850 **3033**	23
4850 **3034**	23
4850 **3035**	25
4850 **3036**	25
4850 **3037**	25
4850 **3038**	25
4850 **4xxx**	86
4853 **xxxx**	35
4899 **0011**	55, 61, 67, 71
4899 **01xx**	96
4899 **02xx**	97
4899 **03xx**	97
49xx **xxxx**	71
5xxx **xxxx**	47, 51, 55, 61, 67, 71, 83
6xxx **xxxx**	47, 51, 55, 61, 67, 71, 83

socomec
Innovative Power Solutions

Model: Piano Forte
Production: SOCOMEC
Photography: Martin Bernhart and Studio Objectif

Socomec worldwide

IN EUROPE

BELGIUM
B - 1070 Bruxelles
Tel. +32 (0)2 340 02 30
info.be@socomec.com

FRANCE
F - 94132 Fontenay-sous-Bois Cedex
Tel. +33 (0)1 45 14 63 30
info.scp.fr@socomec.com

GERMANY
D - 76275 Ettlingen
Tel. +49 (0)7243 65 29 2 0
info.scp.de@socomec.com

ITALY
I - 20098 San Giuliano Milanese (MI)
Tel. +39 02 9849821
info.scp.it@socomec.com

NETHERLANDS
NL - 3991 CD Houten
Tel. +31 (0)30 760 0901
info.scp.nl@socomec.com

POLAND
01-625 Warszawa
Tel. +48 91 442 64 11
info.scp.pl@socomec.com

SLOVENIA
SI - 1000 Ljubljana
Tel. +386 1 5807 860
info.scp.si@socomec.com

SPAIN
E - 08310 Argentona (Barcelona)
Tel. +34 93 741 60 67
info.scp.es@socomec.com

UNITED KINGDOM
Hitchin Hertfordshire SG4 0TY
Tel. +44 (0)1462 440033
info.scp.uk@socomec.com

TURKEY
34775 Istanbul
Tel. +90 (0)216 540 71 20
info.scp.tr@socomec.com

IN ASIA

NORTH EAST ASIA
P.R.C 200052 Shanghai - China
Tel. +86 (0)21 5298 9555
info.scp.cn@socomec.com

SOUTH EAST ASIA & PACIFIC
Singapore 408723
Tel. +65 6506 7600
info.scp.sg@socomec.com

SOUTH ASIA
122001 Gurgaon, Haryana - India
Tel. +91 124 4562 700
info.scp.in@socomec.com

IN MIDDLE EAST

UNITED ARAB EMIRATES
Dubai, U.A.E.
Tel. +971 (0)4 29 98 441
info.scp.ae@socomec.com

IN NORTH AMERICA

USA, CANADA & MEXICO
Cambridge, MA 02142 USA
Tel. +1 617 245 0447
info.scp.us@socomec.com

HEAD OFFICE

SOCOMEC GROUP
S.A. SOCOMEC capital 10 951 300 €
R.C.S. Strasbourg B 548 500 149
B.P. 60010 - 1, rue de Westhouse
F-67235 Benfeld Cedex - FRANCE

INTERNATIONAL SALES DEPARTMENT

SOCOMEC
1, rue de Westhouse - B.P. 60010
F - 67235 Benfeld Cedex - FRANCE
Tel. +33 (0)3 88 57 41 41
Fax +33 (0)3 88 74 08 00
info.scp.isd@socomec.com

YOUR DISTRIBUTOR

VALID FOR FRANCE

www.socomec.com

ENERGY SPECIALIST SINCE 1922

socomec
Innovative Power Solutions

Non contractual document. © 2013, Socomec SA. All rights reserved. - To help protect the environment, this document has been printed on PEFC paper (Programme for the Endorsement of Forest Certification)
DCG 1200218 - 05/13