VOSSLOH SCHWABE



Component Systems for Lighting Applications



Lamps
OLEDs
LED Components
Ballasts
Transformers
Control Gear Units
Ignitors
Power Switches
Capacitors
Lampholders
Starter Holders
Terminal Blocks
Accessories

LIGHT TECHNOLOGY PRODUCTS



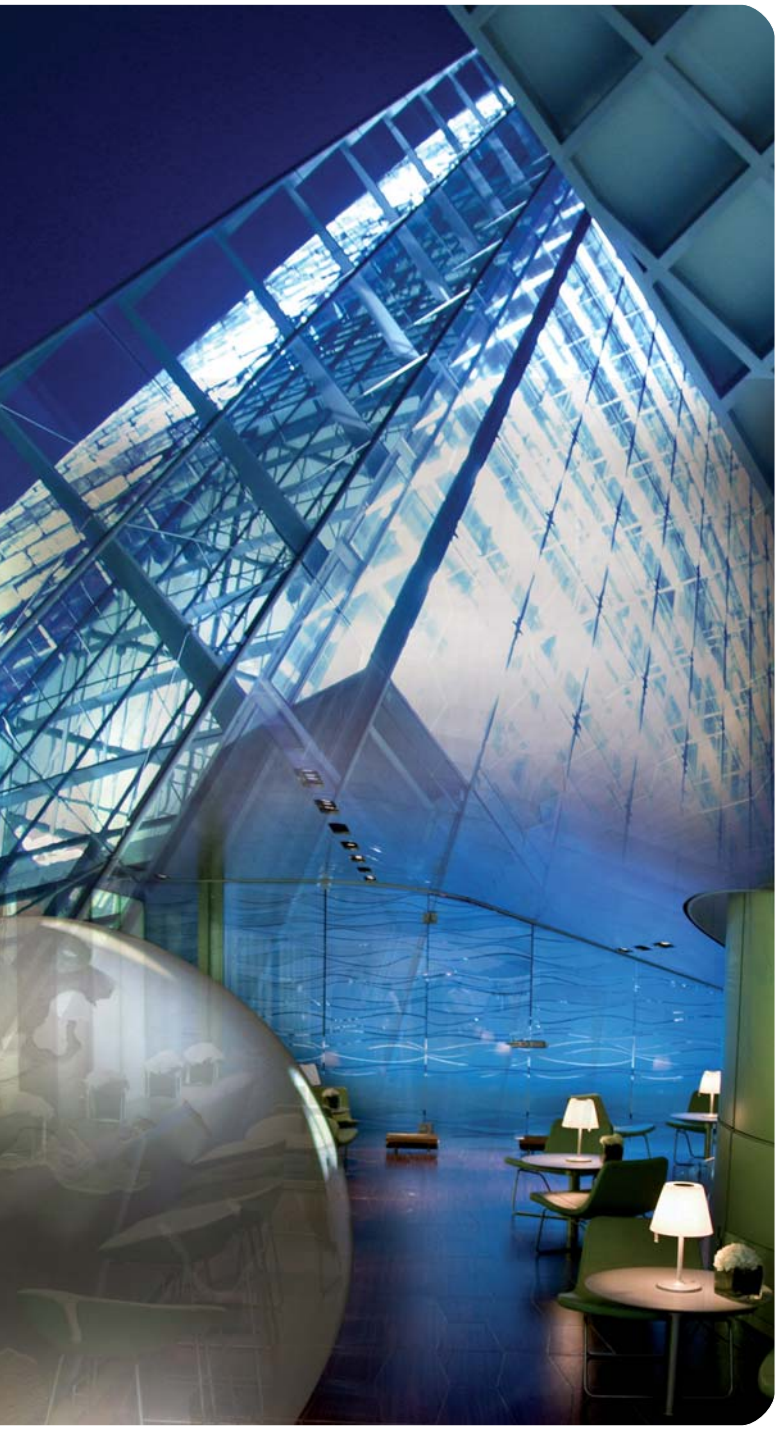

Vossloh-Schwabe is not merely a manufacturer of top-quality components for the lighting industry, but above all makes a competent and innovative contribution to setting market trends.

Featuring a future-proof component structure that already now satisfies both the requirements of energy-efficient lighting and European standards, VS' unique product range includes magnetic and electronic ballasts, state-of-the-art control systems (Lixos or DALI), LED lighting systems and matching operating devices.

Employing in excess of 1,000 people in more than 20 countries, Vossloh-Schwabe is represented all over the world. As a subsidiary of the Japanese Panasonic Group, VS can draw on extensive resources for R&D as well as for international expansion activities. A highly motivated workforce, comprehensive market knowledge, profound industry expertise as well as eco-awareness and environmental responsibility show Vossloh-Schwabe to be a reliable partner for the provision of optimum and cost-effective lighting solutions.

Vossloh-Schwabe's dedication to delivering superior quality is reflected in its ISO 9001 certification.

Vossloh-Schwabe is ready to embark on a collaborative journey into an economically illuminated future.



Sagrada Família



Warehouse

Sagrada Família, Barcelona

As different as each of the façades of the Sagrada Família are, they do have something in common: each is supremely symbolic. Rather than merely enclose space with walls, Gaudi intended his buildings to tell stories and be an experience in themselves. Gaudi's vision is now slowly being put into practice along with a number of additional modern elements, for instance the decision to use innovative lighting technology in the form of LED spots to perfectly set off the basilica's sacral symbolism.

The interior of the basilica, which has already been completed, soars up to an enormous vault supported by stone columns that branch off at the ceiling to form a lace-like canopy. At present these columns are fitted with a total of 40 luminaires, which in turn are equipped with daylight-white LED modules and matching control gear made by Vossloh-Schwabe.

Interior photos: José Tió
Consulting and luminaire design: Anoche Iluminación Arquitectónica
Glass artist: D. Fita

LiCS – The DALI Light Management System

More than ever before, present-day light management is expected to be flexible, save energy and be convenient to operate. The new all-round system made by Vossloh-Schwabe, consisting of a light controller, sensor, extender and push buttons, can be programmed without needing a PC or overriding bus system. Instead, the entire lighting system is configured using the controller's integrated display screen and rotary push key.

The DALI-based system can be used to control a max. of 64 luminaires, or luminaire groups, 6 independently configurable standard buttons and up to 16 MultiSensors using a single controller. By connecting an extender, the lighting system can then be extended by up to 64 luminaires per extender. The controller can be mounted on a 35-mm mounting rail. The wireless version of the controller (LW) substantially reduces the installation work required during refurbishment and with that also reduces installation costs. Up to 16 wireless modules can be connected, each with 4 independently configurable radio buttons.

Thanks to the VS LiCS system, the energy consumed by a warehouse (1,320 m², ceiling height of 7 m) can be almost halved from approx. 20,500 kWh p.a. down to 11,500 kWh p.a. by installing 169 luminaires 1x 49 W, a DALI-compliant electronic ballast and MultiSensors. Creating luminaire groups as well as positioning light- and motion-activated Multi-Sensors additionally provide the comfort and convenience of optimum light – any time you need it. If the sensor fails to register any movement, LiCS will switch the lighting system off, either in its entirety or only in certain sections, or dim it down to the specified minimum value. This removes the need to switch the lighting system on and off manually.

Contents

1 Lamps **6–7**
Premier S Metal Halide Lamps 7

2 OLED and LED Components **8–99**
OLEDs 9
Technical details on OLED 10–13
Constant current system 18–53
LEDSpots 54–60
24 V CA system 61–70
24 V standard system 71–89
Electronic converter for LED modules 12 V 90–91
Technical details on LED technology 92–99

3 Ballasts for Discharge Lamps **100–141**
Electronic ballasts, accessories 102–111
Dimmable electronic ballasts 110–111
Control gear units for HS and HI lamps 112–118
Electromagnetic ballasts 119–141
for HS and HI lamps 119–130
for HM and HI lamps 131–134
for SDW-T/-TF lamps 135
for power reduction 136–141

3 Ignitors and Accessories for Discharge Lamps **142–162**
Electronic superimposed ignitors 144–152
Pulse ignitors 153–154
Instant restrike ignitors 155–156
Electronic power switches 157
Electronic superimposed ignitors with power switch 158
Switch units for electronic operating devices with 1–10 V interface 159
Start-up switches 160–161
Electronic discharge units 162

3 Lampholders for Discharge Lamps **164–183**
E27 lampholders 166–168
E40 lampholders 169–171
G8.5 lampholders 171
GX8.5 lampholders, accessories 172
GU8.5 lampholders 172
GU6.5 lampholders 173
PGJ5 lampholders 174
GX10 lampholders 175
GY9.5 lampholders 175
G12, GX12-1, PG12-1, PG12-2 lampholders 176–177
RX7s lampholders 177–180
Fc2 lampholders 181–182
K12x30s lampholders 182
K12s-7 support 183

3 Technical Details for Discharge Lamps **184–225**

4 Electronic Ballasts for TC and T Lamps **226–256**
For compact fluorescent lamps 228–244
ELXs – Warm start 228
ELXc – Warm start – Linear 229
ELXd – Dimmable – Linear 230–231
ELXc – Warm start – Compact 232–239
ELXd – Dimmable – Compact 240–244
For tubular fluorescent lamps 245–255
ELXs – Warm start 245
ELXc – Warm start – Linear 246–249
ELXc EffectLine – Warm start 250–251
ELXd – Dimmable – Linear 252–254
ELXe – Instant start – Linear 255
Accessories for dimmable electronic built-in ballasts 256

4 Electromagnetic Ballasts for TC and T Lamps **258–280**
For compact fluorescent lamps 260–272
Standard ballasts 260–264
Super-thin ballasts 265–268
Slim ballasts 269–270
Ballasts 120 V, 60 Hz 271
Operating units 120 V, 60 Hz 272
For tubular fluorescent lamps 273–280
Standard ballasts 273–275
Super-thin ballasts 276–277
Slim ballasts 277–278
Ballasts 120 V, 60 Hz 279
Operating units 120 V, 60 Hz 280

4 Lampholders and Accessories for TC Lamps **282–304**
G24, GX24 lampholders 284–291
2G7 lampholders 292
2G8 lampholders 293
G23 lampholders 293–296
GR8, GR10q, GRY10q-3, GRZ10d, GRZ10t lampholders 296–297
2G10 lampholders 297
2G11/2GX11 lampholders 298–299
Accessories 300–302
GX53-1 lampholders, accessories 303–304

4 Lampholders and Accessories for T Lamps **306–337**
G5 lampholders, accessories 308–312
G5 twin lampholder 313
G5 lampholders, degree of protection IP54/IP65/IP67 313–314
2GX13 lampholders, accessories 315
G13 push-through lampholders 316–318
G13 push-fit lampholders 319–321
G13 push-fit twin lampholders, accessories 322–323
G13 built-in lampholders 323–327
G13 surface-mounted lampholders 327–328
Accessories for T8 and T12 lamps 328–330

4 Lampholders and Accessories for T Lamps 306–337

G13 lampholders, degree of protection IP54/IP65/IP67, accessories 331–335
G10q lampholders, accessories 336
W4.3x8.5d surface-mounted lampholder 337

4 Starter Holders and Terminal Blocks, Accessories 338–349

Starter holders, accessories 340–343
Terminal blocks, accessories 344–348
Built-in rocker switches 349

4 Technical Details for Fluorescent Lamps 350–379

5 Transformers for Low-voltage Halogen Incandescent Lamps 380–395

Independent electronic converters 382–386
With DALI interface 386
Electronic built-in converters 387–389
Potentiometer and dimmers 390
Electromagnetic safety transformers 391–395

5 Lampholders for Low-voltage Halogen Incandescent Lamps 396–407

G4, GZ4, G5.3, GX5.3, G6.35, GY6.35 lampholders, accessories 398–399
G4 lampholders, GZ4 lamp connectors 400–402
Lampholders with separate mounting spring for GU4 lamps 402–403
GX5.3 lamp connectors 403–404
GU5.3 lampholders 404
Lampholders with separate mounting spring for GU5.3 lamps 405–406
G6.35, GY6.35 lampholders, GZ6.35 lamp connectors 406
G53 lamp connectors 407
B15d, BA15d lampholders 407

5 Lampholders for Mains Voltage Halogen Incandescent Lamps 407–417

B15d, BA15d lampholders 407
G9 lampholders, accessories 408–410
GU10, GZ10 lampholders, accessories 410–412
R7s thermoplastic lampholders 412
R7s ceramic lampholders 412–414
R7s metal lampholders 415
Connection boxes 416
Connectors 417

5 Lampholders for General-service Incandescent and Retrofit Lamps 418–456

E14 thermoplastic lampholders, one-piece and cover caps 420–424
E27 renovation kit lampholders 425
E14 thermoplastic lampholders, three-piece 425–427
E14 porcelain lampholders, one-piece 428

5 Lampholders for General-service Incandescent and Retrofit Lamps 418–456

E14 metal lampholders, three-piece 428–429
E14 thermoplastic rocker switch lampholders 429–430
E14 lampholder for emergency lighting 430
E27 thermoplastic lampholders, one-piece and cover caps 431–435
E27 table lamp set 436
E27 renovation kit lampholders 436
E27 thermoplastic lampholders, three-piece 437–439
E27 porcelain lampholders 440–442
E27 metal lampholders, three-piece 442–443
E27 thermoplastic pull-switch lampholders 443–444
E27 metal pull-switch lampholders 445
E27 thermoplastic rocker switch lampholders 446
E27 thermoplastic rotary switch lampholders 447
E27 festoon lampholders 447–448
B22d lampholders, accessories 448–449
Accessories for E14, E27 and B22d lampholders 450–455
E40 porcelain lampholders 456

5 Technical Details for Incandescent Lamps 457–471

6 Lighting Control Systems for Indoor Applications 472–480

Light Controller L/LW and S 476–477
Extender 478
Sensors 479
Accessories 480
Technical details for lighting control systems for indoor applications 481–487

6 Lighting Control Systems for Outdoor Applications 488–497

Light Controller – iLC and iPC 492–493
Data concentrator – iDC 494
Lux meter – iLUX 495
Software – iCT 496
Intelligent luminaire information centre – iLIC 496
Light Controller – iMCU 497

7 Emergency Lighting Modules 498–501

With self-diagnosis function 500–501
Technical details for emergency lighting modules 502–508

8 Parallel capacitors 510–524

Parallel capacitors 512–515
Technical details for parallel capacitors 516–524

9 Components for UL Market 526–532

For discharge lamps 528–530
For fluorescent lamps 530–532

10 General Technical Details 533–543

General Technical Details 534–540
Glossary 541–543
Table of reference numbers, approval marks 544–561

DISCHARGE LAMPS





A NEW GENERATION OF HI LAMPS

Panasonic has redefined the standard in retail lighting with its new 35 W and 70 W Premier S ceramic discharge lamps.

The lamp is characterised by an extremely high CRI value of more than R_a 96, a high degree of luminous efficiency (100 lm/W) as well as near constant luminous flux (luminous flux = 80% at up to 12,000 operating hours).

The lamp's "triple envelope" technology protects the lamp bulb and therefore removes the need to fit luminaires with a front cover since there is no danger of any glass shards falling out should the lamp shatter. Next to facilitating even slimmer luminaire designs, the enclosed bulb also increases easeof maintenance and cost-effectiveness since there is no need to remove or replace a glass cover when lamps are exchanged.

Photometric quality, cost-effectiveness, safety factors and ease of installation are all key criteria when it comes to luminaire design – and all of these criteria are fully satisfied by the Premier S lamp.

Triple-envelope technology
Enclosed bulb prevents glass shards from falling out should the lamp shatter

Highly convenient and low-cost maintenance
Coverless design enables easy lamp replacement

Minimal drop in luminous flux
Results in long service life at nearly constant light quality

High CRI value (R_a 93 / R_a 96)
Especially in the red spectral range

High degree of luminous efficiency (100 lm/W)
Due to perfectly matched system components

Premier S Metal Halide Lamps

35 W and 70 W ceramic discharge lamps
for open and closed luminaires
Colour temperature: warm white (3000 K)
or cool white (4200 K)
Colour rendering level: 1A
Lamp base: "twist & lock" GU8.5 base
Operation only with suitable electronic ballasts (see page 103)
Suitable lampholders see page 172
UV filter technology



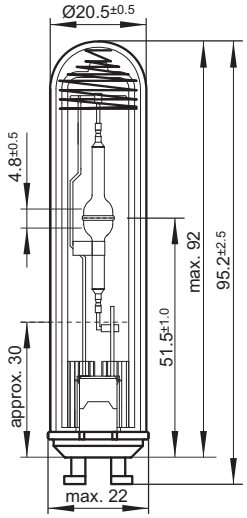

Premier S 35 W

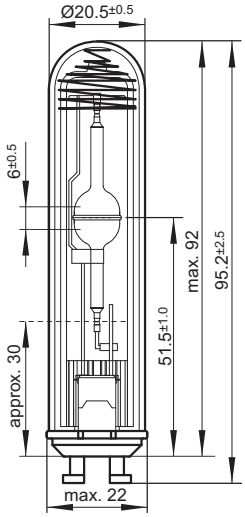

Premier S 70 W

Nominal output W	Base	Type	**Ref. No.**	Output consumption W	Colour	Colour temperature K	Luminous flux* lm	Luminous efficiency lm/W	CRI R_a	Average survival lamp life hrs.	Burning position
35	GU8.5	CPS 35W 3000K	**546075**	39	warm white	3000	3300	85	93	15,000	free
35	GU8.5	CPS 35W 4200K	**546076**	39	cool white	4200	3300	85	96	15,000	free
70	GU8.5	CPS 70W 3000K	**546077**	73	warm white	3000	7300	100	93	15,000	free
70	GU8.5	CPS 70W 4200K	**546078**	73	cool white	4200	7300	100	96	18,000	free

* Lumen maintenance: > 80% @ 12,000 hrs

ORGANIC LIGHT





OLED STANDS FOR FEEL-GOOD LIGHTING

OLEDs are made of very thin organic semi-conductor layers that, when the power is switched on, radiate the kind of uniform diffused light known from indirect lighting. In addition, OLEDs are already more energy-efficient than halogen lamps.

The potential and application options of OLED technology are extensive. OLEDs are lightweight, thin and will in future also be available in transparent versions, thus opening up numerous further design possibilities.

Dimmable via a 1–10 V interface or PWM signal, VS OLEDs are additionally characterised by optimum values in terms of luminance, efficiency, colour rendering and service life. The extremely thin base part ensures easy mounting and quick replacement of OLED panels.

Typical applications

- High-quality luminaires for effect lighting
- Decorative indoor lighting
- Orientation lighting
- Illuminated signs

OLED features

- Diffused, glare-free and large-area light radiation with a high colour rendering index (CRI)
- Extremely thin design and low weight
- Dimmable via a 1–10 V interface or a PWM signal
- Contain neither mercury nor any other hazardous substances
- UV- and IR-free
- No additional cooling needed

OLEDs



Built-in light modules

These square-shaped OLED modules feature a high CRI value for brilliant colours, are suitable for indoor use and are characterised by a very flat design. OLED modules are available in three white tones. Thanks to the base part, the modules are easy to attach and replace.

Technical notes

OLED module dimensions (WxHxD): 102x95x8.9 mm
Input voltage: 24 V DC ±10%
Operating current range over the service life:
117–188 mA ±15%
Power consumption range over the service life:
2.8–4.5 W ±15%
Ambient temperature t_a: 5 to 35 °C
Max. casing temperature at the t_c point
t_c1 max. 70 °C
t_c2 max. 57 °C
Humidity range: 45 to 85%
Luminance: 3000 cd/m²
Luminance uniformity: ≥ 50%
Colour rendering index (CRI) R_a: ≥ 90
Luminous flux: 48 lm
Service life L70: 10,000 hrs
Weight: 100 g
OLED panel incl. base part
Type: PEW-OM 80x80 3000K

new **Ref. No.: 186223** colour temperature: 3000 K

Type: PEW-OM 80x80 4000K

new **Ref. No.: 186247** colour temperature: 4000 K

Type: PEW-OM 80x80 5000K

new **Ref. No.: 186248** colour temperature: 5000 K

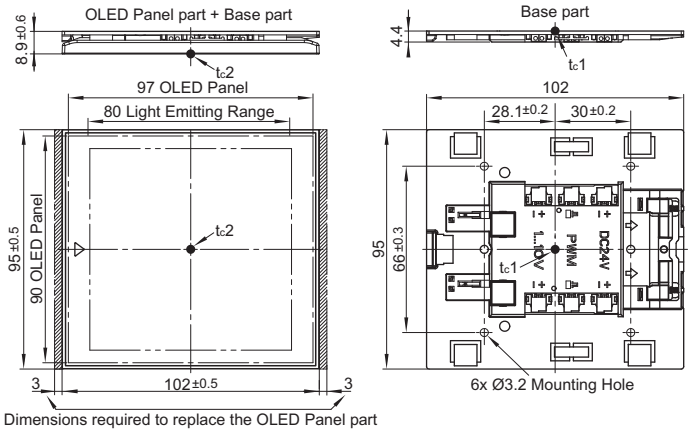

OLED modules for indoor use

Brought to you by the company Panasonic, VS OLED modules consist of two parts:

- OLED panel — The OLED panel is the actual light source of the module. To protect it from the weather and mechanical stress, the panel is enclosed in a casing, whose design enables simple lamp exchange.
- Base part — The base part serves to hold the OLED panel in place and contains a voltage/current converter that exactly meets the needs of the respective OLED panel, which goes to ensure optimum operation of the module.
  Apart from the supply connections, the base part also features the connections needed to dim the OLED module. The PWM input can be addressed using the colour controllers of the VS DigiLED CA series, which are suitable for easy integration into DALI/DMX systems.

The intelligent design of the connections also makes it easy to combine OLED and LED technologies.

Installation Instructions for OLED Modules

Instructions for mounting and installing OLED modules

Mandatory regulations

DIN VDE 0100	Erection of low-voltage installations
EN 60598-1	Luminaires – part 1: general requirements and tests
EN 61347-1	Lamp control gear – part 1: general and safety requirements
EN 61347-2-11	Control gear – part 2-11: particular requirements for miscellaneous electronic circuits used with luminaires
EN 55015	Limits and methods of measurement of radio disturbance characteristics of electrical lighting and similar equipment
EN 61000-3-2	Electromagnetic compatibility (EMC) – part 3-2: limits – limits for harmonic current emissions (equipment input current up to and including 16 A per phase)
EN 61000-3-3	Electromagnetic compatibility (EMC) – part 3-3: limits – limitation of voltage fluctuations and flicker in low-voltage circuits (equipment input current up to and including 16 A per phase)
EN 61547	For general lighting purposes – EMC immunity requirements
EN 62471	Photo-biological safety of lamps and lamp systems

Mechanical mounting of OLED modules

Surface Solid, flat surface

Installation location
OLED modules are approved only for installation in indoor luminaires.
OLED modules need to be shielded from humidity and heat.

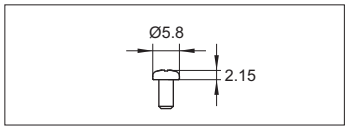

Fastening M3 screws

Installation location
Any

Further handling information

- OLED modules and their various components must not be subjected to undue mechanical stress:
  - OLED modules must not be stacked on top of one another;
  - OLED modules must not be handled as bulk cargo;
  - Shear forces or pressure stress must be avoided when handling the base part, the terminals and especially the OLED panels.
- Standard ESD (electrostatic discharge) prevention measures need to be taken when handling and installing OLED modules; electrostatic discharge can damage OLEDs.
- Never use an OLED panel with a broken or damaged surface.
- To attach the base part, please use the two central holes or the four corner holes.
- OLED modules are not tested for resistance to vibrations. When installing the module for respective applications, please ensure the luminaire design guarantees the OLED panel cannot fall out.
- The module must be disconnected from the power supply prior to replacing the OLED panel.
- The maximum temperature at the t_c point must not be exceeded to ensure fault-free operation of the module.
- The modules can produce audible noise. Please test noise development in the individual luminaire.
- Poor terminal connections can cause flashovers, which in unfavourable cases can cause a fire. Please ensure all leads are contacted properly.
- This product is not protected against water, moisture or dust. If destined for use in applications subject to higher degrees of moisture or dust, OLED modules must be installed in a casing with a suitable degree of protection.
- Before any work is carried out on OLED modules, they must be disconnected from the power supply. Ignoring this instruction can result in damage, and can activate the module's protective functions.

Electrical installation

Push-in terminals The terminals can be used with rigid conductors (AWG22).

Wiring
- See the diagram for wiring instructions

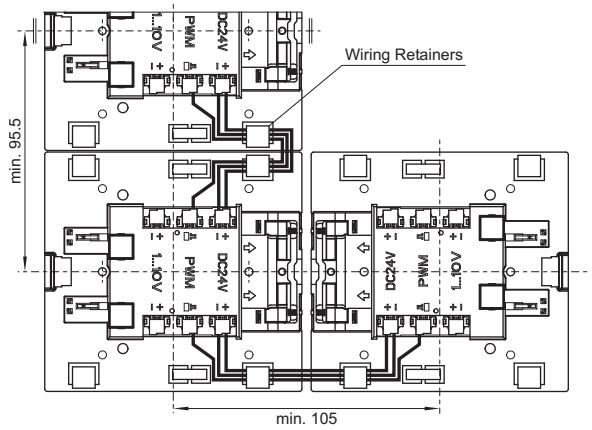

- Please use the wiring guides to ensure proper wiring.
- Ensure that no leads are squashed or pinched by the OLED panel.
- Avoid criss-crossing leads.
- Heed lead polarity.
- After proper terminal connection, please tug gently on the lead (using no more than 15 N of force) to ensure a good electrical connection.
- To undo the connection, pull on the lead. Do not use the base part again afterwards.
- Two signal types can be used for dimming purposes:
  - PWM signal: please use a PWM generator of the following specifications:
    PWM frequency: 122 Hz to 1 kHz
    Amplitude: 8 to 24 V
  - 1–10 V interface: in acc. with EN 60929
- Further wiring instructions can be found under wiring layout on page 13

Protective functions

EOL behaviour When an OLED panel nears the end of its service life, the electronics in the base part reduce the current flowing through the panel, which causes the OLED to flicker. This is a sign that the OLED panel needs to be replaced.

No-load protection
If an OLED panel is removed during operation or if the base part is operated without a panel, the electronics will immediately turn the base part off. To reset, the base part must be briefly disconnected from the power supply.

Thermal behaviour

The service life of an OLED panel is decisively influenced by its operating temperature.
To ensure the longest possible service life of an OLED module, balanced thermal management must be taken into account when designing the luminaire.

Maximum operating temperatures

Measuring points	Max. temperature
t_c1 (centre of the attachment panel of the base part)	70 °C
t_c2 (centre of the top surface of the OLED panel)	57 °C

Wiring Layouts

Connection of OLED modules (without a dimming function)

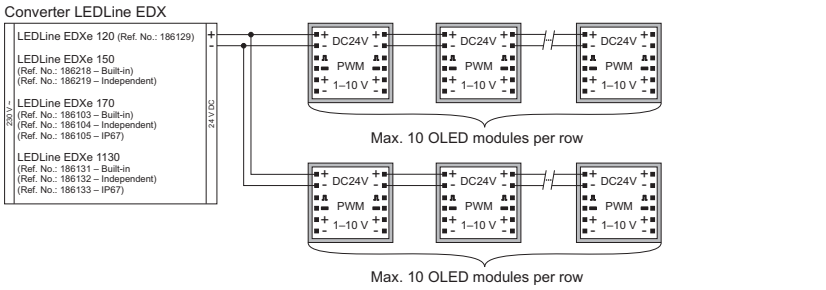

The total number of OLED modules depends on the output rating of the driver.

Connection of OLED modules with a dimming function

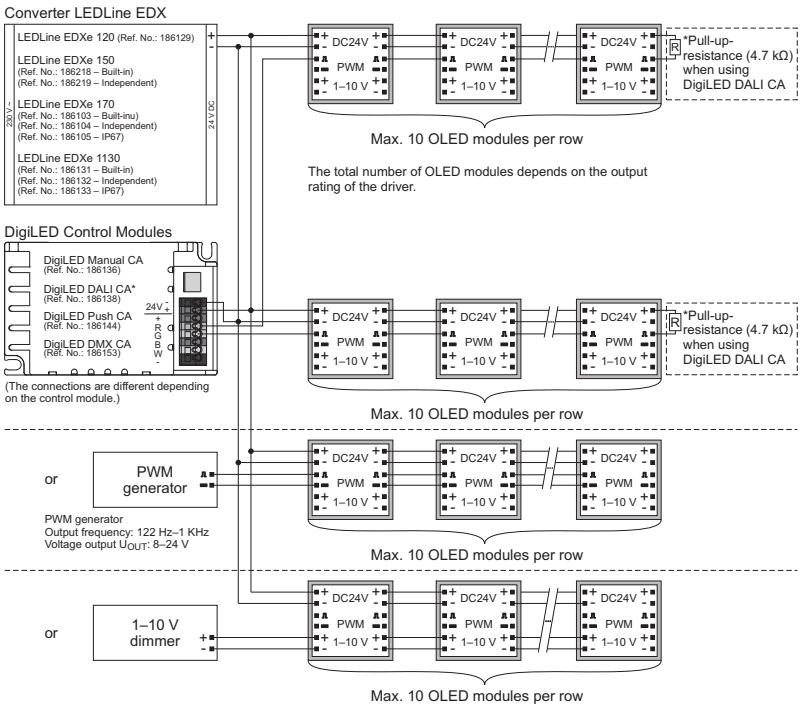

Connection of OLED modules and LED modules (without a dimming function)

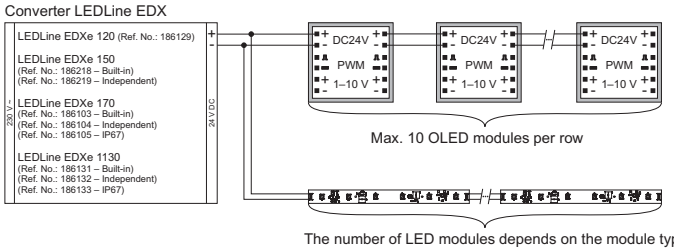

The number of LED modules depends on the module type.

OLED and LED modules can be operated in combination. However, LED modules cannot be included in rows of OLEDs that are connected in series. Combined OLED/LED systems must be connected in parallel, as shown above. The total number of OLED and LED modules is dependent on the power consumption of the modules as well as the output rating of the driver.

LED MODULES, OPERATING DEVICES AND CONNECTING TECHNOLOGY





SYSTEMS AND COMPONENTS FOR LIGHTING APPLICATIONS WITH LEDs

Thanks to the characteristics and advantages of LED modules over conventional light sources, there is almost no limit to the ways in which LED modules can be used, and new applications are being found on a continuous basis.

The usefulness of LED modules stretches from architecture and furniture design right through to creating atmospheric lighting in homes, shops, bars and restaurants. LED modules can be integrated into existing lighting systems or integrated into the respective application as a separate light source.

Vossloh-Schwabe develops and manufactures LED modules in different performance classes and shapes on the basis of COB and SMD technology.

The DigiLED series makes a high-performance range of colour-control modules for polychromatic control of LED modules using RGB technology available to users. The digital technology and user-friendly interfaces guarantee LED lighting is simple to use.

Vossloh-Schwabe's high-quality electronic LED control gear, which is available in various performance classes and designs, is designed to supply power to voltage- and constant-current-operated LED applications.

Vossloh-Schwabe's range of LED lighting systems and components is rounded off by connection components for integrating LED modules into lighting applications. Different joining elements to match the individual LED modules guarantee simple, low-cost and soldering-free assembly.

2 Components for LED Applications

System overview **16–17**

Constant-current system **18–53**
LUGA Line – Linear LED COB modules and accessories 20-21
HighPerformance (COB) 22-23
LED SMD modules for retail environments 24-25
LUGA Shop – LED COB modules for retail environments 26-27
LED roadway light ME/S 28-30
LED modules SMD/COB 10,000 lm 31
PowerEmitter XP and XML 32-33
TriplePowerEmitter XP with optics and heat sink 34-35
LED modules XP – Line, Spot and Mini 36-38
LED modules Spot XP with optics and heat sink 39
LED modulesHC – Line, Spot and Mini 40-41
PowerOptics3 for XP and XML modules 42-43
PowerOptics for XP modules 44
Reflectores for PowerEmitter XP modules 45
Heat sinks for LED modules XP and XML 45
LED constant-current drivers 46-53

LEDSpots **54–60**
LEDSpots XP/XML with heat sink and frames 55-57
LEDSpots reflector XP with heat sink and frames 58-59
LEDSpots EffectLine XP/XML with heat sink and frames 60

24 V CA system **61–70**
High Power 24 V CA modules XP Mono and RGB 62-63
LEDLine Flex RGB2 CA Indoor 64
LEDLine Flex RGB2 CA Outdoor 65
Colour control modules – DigiLED CA 66-68
LED connection technology for 24 CA system 69
Wiring layout High Power 70

24 V standard system **71–89**
LEDLine Flex SMD monochrom/RGB and High Brightness 72-73
LEDLine Flex SMD Outdoor monochrom and RGB 74-75
LEDLine (COB) 76-77
LEDLine (SMD) 78
LED connection technology LEDLine (SMD) 79
Colour control module – DigiLED 80-81
LED connection technology 82-83
Typical RGB wiring layout 84
LightThile 85
Thermally conductive adhesive transfer tapes and thermal tapes for LED modules 86-87
Electronic converters for LED modules 24 V 88-89

Electronic converter for LED modules 12 V **90–91**

Technical details for LED applications **92–99**
General technical details 533-540
Glossary 541-543

LED System Overview by Application Fields



LED modules


Roadway Light ME/S


Roadway Light ME/S Linear


Roadway Light ME/S 2x2


SMD 7000/10000 lm


LUGA 7000/10000 lm

LED constant current drivers
350 mA, 42 W
400/700 mA, 150 W | IP67, 70/150 W





LED modules


LUGA Linear


HighPerformance Standard


Line XP-E/XP-G

LED constant current drivers
350 mA, 15 W
350 mA, 75 W





LED modules


SMD Shop

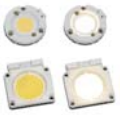
LUGA Shop
2000/3000/4000/5500 lm


LUGA 7000/10000 lm

LED constant current drivers
700 mA, 40 W | 1050 mA, 60 W
DALI: 700 mA, 40 W | 1050 mA, 40 W





LED modules


High Power 24 V CA
XP Mono / RGB


LEDLine Flex SMD Outdoor
Mono / RGB


LEDLine COB

LED colour control
DigiLED RF CA
DigiLED Push CA



LED converter
150, 170, 1130/24 V
170, 1130 IP67/24 V





LED modules


PowerEmitter XP/XML


TriplePowerEmitter XP


Line XP | Spot XP | Mini XP


LEDSpot XP/XML
with heat sink

LED constant current drivers
350 mA, 8/11/42 W | 500 mA, 16 W
700 mA, 17 W | 1050 mA, 20 W



System Overview for Voltage Driven LED Modules

LED Modules

24 V DC – High Power and Low Power CA System



Triple RGB/Mono
Flood RGB/Mono
LEDLine RGB/Mono
LEDLine Flex RGB In-/Outdoor

24 V DC – Standard System



LEDLine Flex High Brightness
LEDLine SMD
LEDLine Flex SMD RGB/Mono
LEDLine COB 150/300
LEDLine Flex Outdoor

Colour Control Modules

CA System

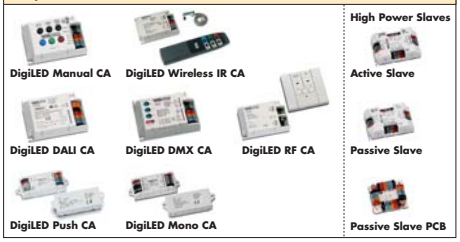

DigiLED Manual CA
DigiLED Wireless IR CA
DigiLED DALI CA
DigiLED DMX CA
DigiLED RF CA
DigiLED Push CA
DigiLED Mono CA

High Power Slaves
Active Slave
Passive Slave
Passive Slave PCB

Standard System

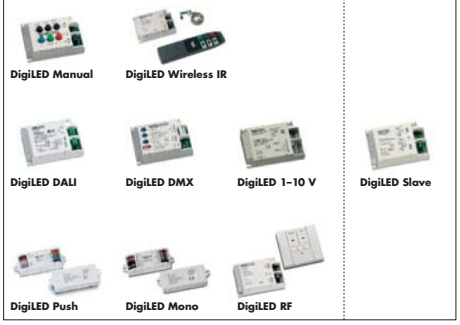

DigiLED Manual
DigiLED Wireless IR
DigiLED DALI
DigiLED DMX
DigiLED 1–10 V
DigiLED Slave
DigiLED Push
DigiLED Mono
DigiLED RF

Electronic Converters

24 V DC

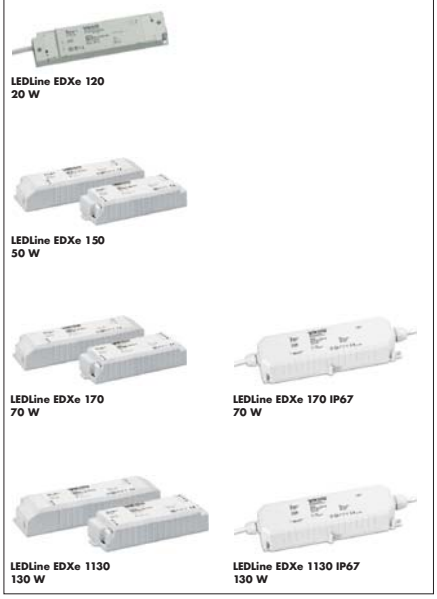

LEDLine EDXe 120
20 W
LEDLine EDXe 150
50 W
LEDLine EDXe 170
70 W
LEDLine EDXe 170 IP67
70 W
LEDLine EDXe 1130
130 W
LEDLine EDXe 1130 IP67
130 W

12 V DC



LEDLine EDXe 112
12 W
LEDLine EDXe 130
30 W
LEDLine EDXe 170
70 W

System Overview for Current Driven LED Modules

LED Modules

350–1050 mA



Mini XP-G
Spot XP-G
Line XP-G
PowerEmitter XP-G
PowerEmitter XML

350–700 mA



Mini XP-E / HC
Spot XP-E / HC
Line XP-E / HC
PowerEmitter XP-E
TriplePowerEmitter XP-E

350–500 mA



Mini XP-C
Spot XP-C
Line XP-C
PowerEmitter XP-C

350 mA



LUGA Line
HighPerformance Standard

700 mA



HighPerformance Standard
LUGA 7,000/10,000 lm



SMD Modules Shop
LUGA Shop
LUGA Shop 5,500 lm
LED Roadway Light MS/E, ME/S – Linear

Constant Current Drivers

350 mA



LEDLine ECXe 350 mA – 8 W
LEDLine ECXe 350 mA – 11 W
LEDLine ECXe 350 mA – 15 W
LEDLine ECXe 350 mA – 42 W
LEDLine ECXe 350 mA – 75 W

500 mA



LEDLine ECXe 500 mA – 16 W

700 mA



LEDLine ECXe 400/700 mA – 150 W
LEDLine ECXd 700 mA DALI

700 mA



LEDLine ECXe 700 mA – 17 W
LEDLine ECXe 700 mA – 40 W
LEDLine ECXd 700 mA – 34 W

1050 mA



LEDLine ECXe 1050 mA – 20 W
LEDLine ECXe 1050 mA – 60 W
LEDLine ECXd 1050 mA DALI – 60 W

LED MODULES, CONSTANT CURRENT DRIVERS AND ACCESSORIES





The LED modules dealt with in this chapter are constant-current-operated, built-in modules whose circuit board does not feature its own power-supply electronics. Circular and linear modules featuring various chip types are available.

Ensuring constant-current control of LED modules benefits permanent operation, efficiency (lm/Watt) and the service life of LEDs. Constant-current control is particularly important for high-performance LEDs, as a module brightness of up to 10,000 lm can be achieved.

Various brightness levels can be set by selecting the requisite operating current (350 mA, 500 mA, 700 mA, 1050 mA). In this regard, the maximum admissible current must never be exceeded and heat development must be monitored.

Typical applications

- Installation in luminaires for general lighting purposes
- Residential lighting
- Reading lamps and spots
- Entertainment
- Retail lighting
- Architectural lighting
- Street lighting

The specifications contained in this catalogue can change due to technical innovations. Any such changes will be made without separate notification.

Please read the safety and installation instructions on the individual products as well as further technical information provided in the extensive product descriptions at **www.vossloh-schwabe.com.**



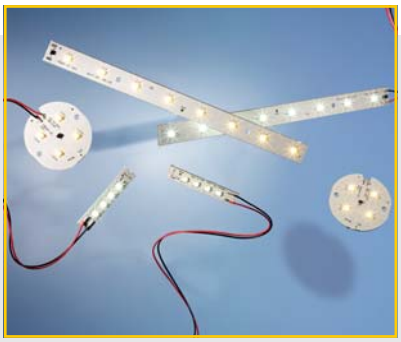

Constant-current LED modules for all applications

Vossloh-Schwabe's constant-current-operated LED modules are characterised by their extreme efficiency, long service life and colour brilliance. The extensive range of different designs and brightness levels results in a multitude of application options.

Whether they are used for indoor or outdoor applications: VS LED modules can be found as a decorative and functional lighting source in offices, homes, buildings and on our streets.
They are:

- highly efficient,
- characterised by a high CRI and
- extremely versatile.

Constant-current driver for current-operated LED modules

To ensure safe operation of LEDs that are connected in series, the operating current must be kept at a constant value by the ballast.

It is recommended to operate all high-performance LED modules in combination with an external constant-current driver.

To ensure the same current flows through every LED, high-performance LEDs can only be connected in series. For each respective application, the source of the constant-current must be selected to ensure the required current and sufficient voltage are supplied to the LED modules. The number of LED modules that can be connected to control gear is dependent on the forward bias of the respective modules.

LUGA Line

Built-in PCB lighting modules
The linear LED COB modules produce a very high lumen output. The flat, impact- and vibration-proof modules are available in warm white and neutral white; they can also be seamlessly connected (no gaps).

The ceramic PCB ensures optimum thermal management. Thanks to producing a homogeneous light field without any discernible individual light points, these LED modules are ideal for use in reflectors in luminaires constructed for T5 and T8 lamps.

Technical notes LED module
Dimensions: 280x15 mm
On-board push terminal system
Allowed operating temperature at t_c point:
–20 to 65 °C
Use of external LED constant-current drivers required
Ceramic PCB for optimum thermal management
Colour rendering index R_a: min. 80
Colour accuracy initially: 3 SDCM per BIN;
after 50,000 hrs. operating time: 4 SDCM per BIN
ESD protection class 2
Minimum order quantity: 60 pcs.

Technical notes fixing unit
Holder material: thermo-conductive resin
Lead exit: lateral or base wiring
When joining linear modules to form rows, a minimum clearance of 1 mm between the assembly groups must be observed.
Accessories such as a cover, diffuser and reflector can be made available on request.

Typical applications
Office lighting
Shop Design
T5/T8 replacement as built-in module
Furniture lighting

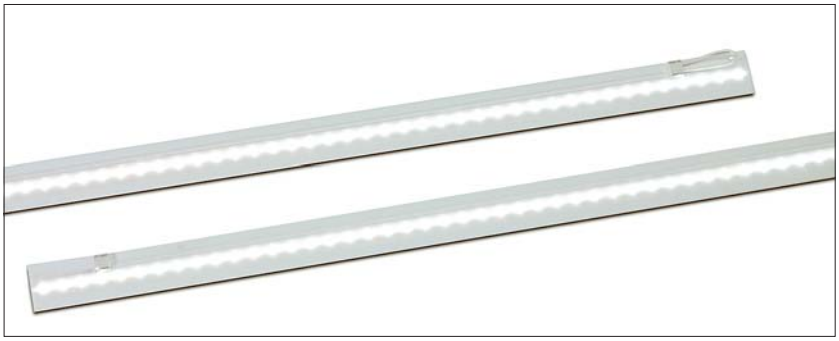



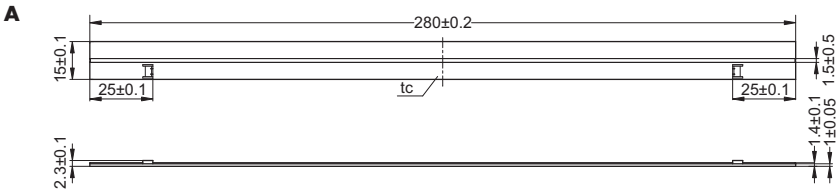

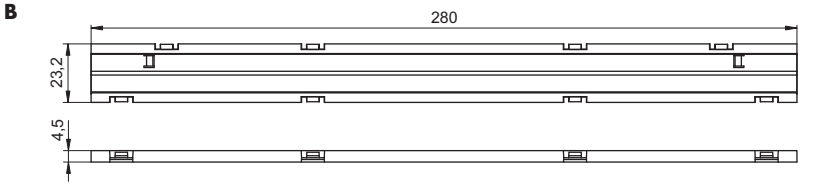

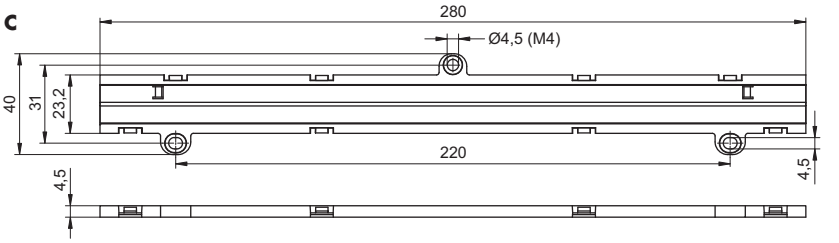

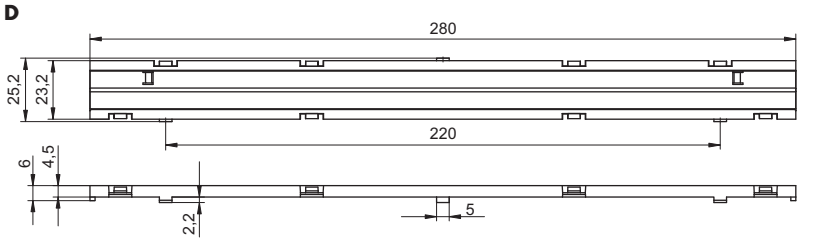

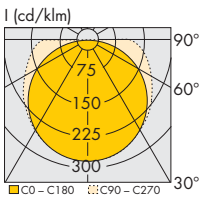

Connection example

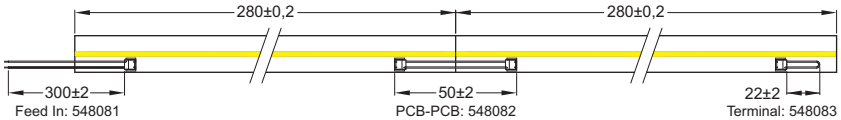

	Type	Ref. No.	Fixing	Colour	Current	Voltage DC (V)			Correlated colour	CRI R_a		Luminous flux* (lm)		Radiation angle* °			Drawing	Weight	Power
					mA	min.	typ.	max.	temperature* (K)	min.	typ.	min.	typ.	min.	typ.	max.		g	W
	LUGA Line																		
new	DML62EL30/L	**548135**	–	warm white	350	18.6	19.8	21	3000 -150/+80	80	84	500	550	110	120	130	A	16.0	6
new	DML62EW/L	**548136**	–	neutral white	350	18.6	19.8	21	4000 -230/+130	80	84	540	600	110	120	130	A	16.0	6
	Fixing unit incl. LUGA Line module																		
new	DML62EL30/L 89300	**549258**	Built-in	warm white	350	18.6	19.8	21	3000 -150/+80	80	84	500	550	110	120	130	D	39.3	6
new	DML62EW/L 896300	**549259**	Built-in	neutral white	350	18.6	19.8	21	4000 -230/+130	80	84	540	600	110	120	130	D	39.3	6
new	DML62EL30/L 89301	**549260**	Screw	warm white	350	18.6	19.8	21	3000 -150/+80	80	84	500	550	110	120	130	C	40.2	6
new	DML62EW/L 89301	**549261**	Screw	neutral white	350	18.6	19.8	21	4000 -230/+130	80	84	540	600	110	120	130	C	40.2	6
new	DML62EL30/L 89302	**549262**	Slide-in	warm white	350	18.6	19.8	21	3000 -150/+80	80	84	500	550	110	120	130	B	39.2	6
new	DML62EW/L 89302	**549263**	Slide-in	neutral white	350	18.6	19.8	21	4000 -230/+130	80	84	540	600	110	120	130	B	39.2	6

* Measurement tolerance of colour accuracy: + 7% | Emission data t_c = 65 °C

Accessories for LUGA Line Modules

Feed-in connector
Feed in connector for power supply
Colour: – black
+ white
Max. permissible current: 1.5 A
Number of strands: 2
(Strand diameter: 0.09 mm²/AWG28)
Type: WU-VB-010
new **Ref. No.: 548081**

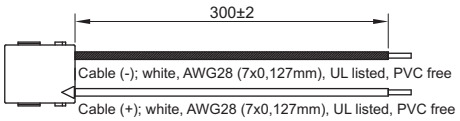



PCB – PCB connector
Max. permissible current: 1.5 A
Type: WU-VB-011
new **Ref. No.: 548082**

End connector
Type: WU-VB-012
new **Ref. No.: 548083**

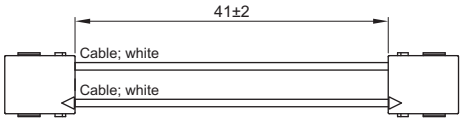

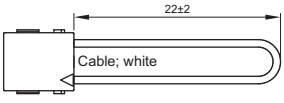



Thermally conductive adhesive tapes
Dimensions: 278 x 13 mm
new **Ref. No.: 548179**

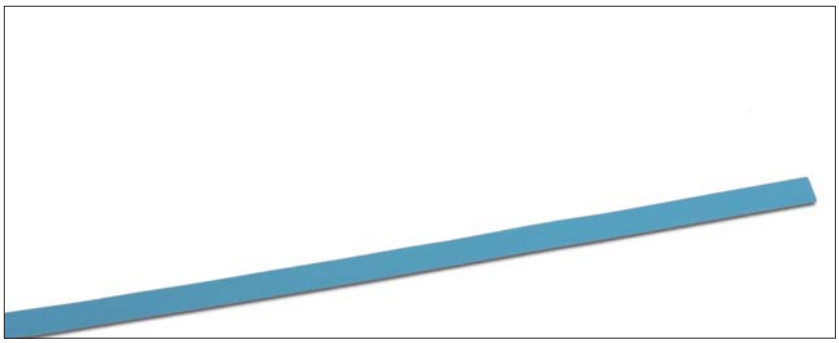

HighPerformance (COB)

Built-in PCB lighting modules
The HighPerformance modules have a very high lumen output. The modules have a low mounting height and are resistant against shock and vibrations.

By ensuring high light-point density COB technology can be used to produce brightly and homogeneously illuminated surfaces.

Technical notes
Linear modules: ≈ 12 x 300 mm with 6 W or 12 W
Square modules:
20 x 20 mm – 1.2 W
35 x 35 mm – 2.5 W
50 x 50 mm – 5 W
Operating temperature at t_c point: –20 to 70 °C
External LED constant-current drivers required
Minimum order quantity: 100 pcs.

Typical applications
Architectural lighting
Marking paths, stairs, etc.
Furniture lighting
Light advertising
Entertainment, shop design

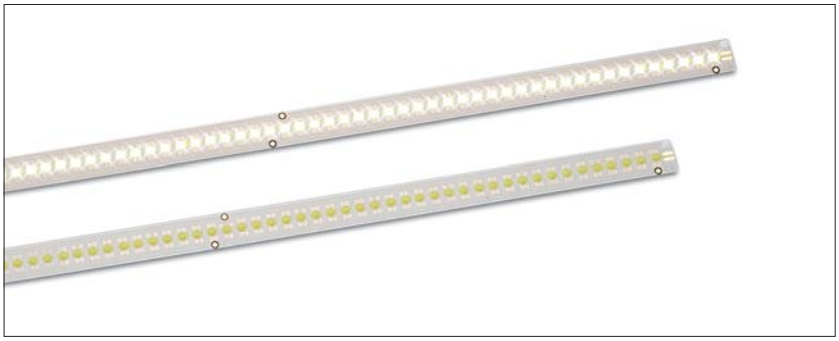



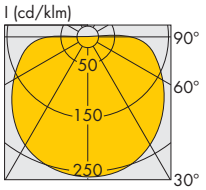

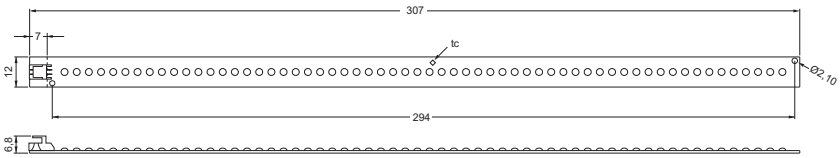

WU-M-291-W, WU-M-292-W

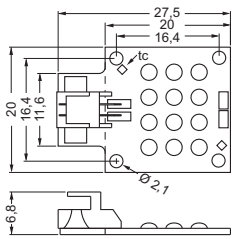

WU-M-293-W

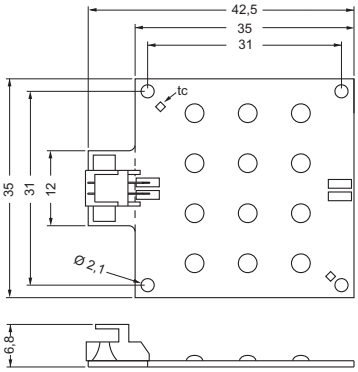

WU-M-294-W

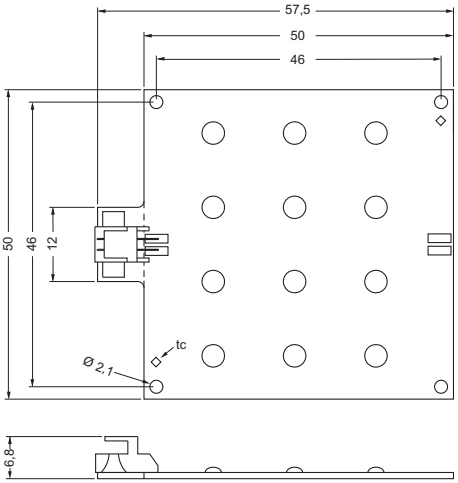

WU-M-295-W

HighPerformance (COB)

Type	Ref. No.	Colour	Number of light points	Current mA	Voltage V	Colour temperature K	Typ. luminous flux* lm	Radiation angle °	Power W
Line modules									
WU-M-291-W-3200K	**532638**	warm white	60	350	17	3200	320	140	6
WU-M-291-W-4200K	**532639**	neutral white	60	350	17	4200	400	140	6
WU-M-291-W-5400K	**526742**	neutral white	60	350	17	5400	400	140	6
WU-M-291-W-6500K	**532640**	cool white	60	350	17	6500	360	140	6
WU-M-292-W-3200K	**532641**	warm white	60	700	17	3200	580	140	12
WU-M-292-W-4200K	**532642**	neutral white	60	700	17	4200	720	140	12
WU-M-292-W-5400K	**526743**	neutral white	60	700	17	5400	720	140	12
WU-M-292-W-6500K	**532643**	cool white	60	700	17	6500	650	140	12
Square modules									
WU-M-293-W-3200K	**532645**	warm white	12	350	3.5	3200	60	140	1.2
WU-M-293-W-4200K	**532646**	neutral white	12	350	3.5	4200	75	140	1.2
WU-M-293-W-5400K	**526744**	neutral white	12	350	3.5	5400	75	140	1.2
WU-M-293-W-6500K	**532647**	cool white	12	350	3.5	6500	70	140	1.2
WU-M-294-W-3200K	**532648**	warm white	12	350	7	3200	115	140	2.5
WU-M-294-W-4200K	**532649**	neutral white	12	350	7	4200	145	140	2.5
WU-M-294-W-5400K	**526745**	neutral white	12	350	7	5400	145	140	2.5
WU-M-294-W-6500K	**532650**	cool white	12	350	7	6500	130	140	2.5
WU-M-295-W-3200K	**534395**	warm white	12	350	14	3200	240	140	5
WU-M-295-W-4200K	**534396**	neutral white	12	350	14	4200	300	140	5
WU-M-295-W-5400K	**526746**	neutral white	12	350	14	5400	300	140	5
WU-M-295-W-6500K	**534397**	cool white	12	350	14	6500	270	140	5

* Emission data at t_c = 40 °C

HighPerformance connection cable

Connection cable for all HighPerformance modules
PVC-free
Colour: white and black
Number of strands: 2 (strand diameter: 0.25 mm²)
Minimum bend radius: 12 mm

Length: 300 mm
Ref. No.: 533318 PCB connector with ferrules on bare end of core

Ref. No.: 533366 PCB connector on both sides

Length: 700 mm
Ref. No.: 534095 PCB connector with ferrules on bare end of core



new

LED Modules SMD for Retail Environments

Built-in lighting modules
These LED modules are used in the most diverse areas of retail application – from shop windows, through refrigerated counters right up to mobile food units at markets.

To ensure safe operation, the modules may only be operated using different constant-current converters at a maximum of 700 mA or a maximum of 1050 mA. Sufficient cooling must be ensured. LED SMD modules are available in white and warm white; pre-assembled connectors enable low-cost and solder-free terminal connections.

Technical notes
Dimensions: Ø 56x6 mm and
Ø 50x6 mm (WU-M-403)
On-board push-in connector
Casing material: PET
Fixing pillars: Ø 3.4 mm
Temperature fail-safe circuit:
activation temperature $t_c \approx 105$ °C
12 V DC interface for active cooling element:
I = 120 mA, temperature-dependent rotation speed control (except WU-M-403)
Use of external LED constant-current drivers required
Colour rendering index R_a: typ. 80
ESD protection class 2
Minimum order quantity: 100 pcs.

Typical applications
Integration in
- Reflector luminaires
- Flat surface-mounting luminaires
- Cladding illumination
- Suspended luminaire with external control gear

For use in
- Shop design
- Furniture lighting
- Stairway and corridor illumination



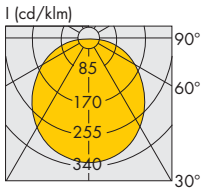

XPE modules

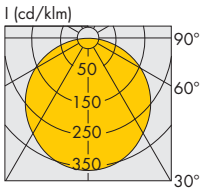

NV modules

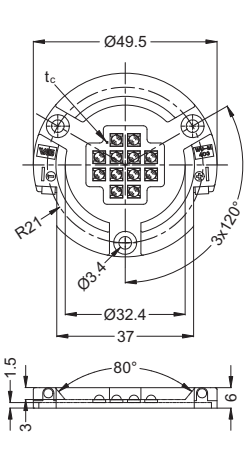

WU-M-403

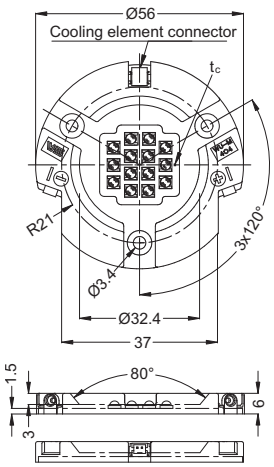

WU-M-404

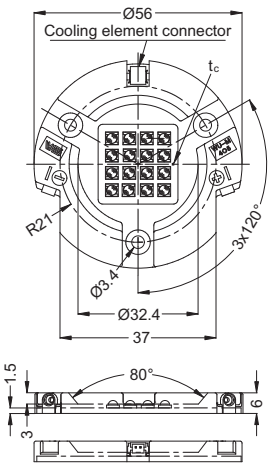

WU-M-405

LED Modules SMD for Retail Environments

	Type	Ref. No.	Colour	Correlated colour temperature K	CRI R_a typ.	Luminous flux* (lm) at 700 mA min.	at 700 mA typ.	at 1050 mA min.	at 1050 mA typ.	Typ. power consumption 700 mA W	1050 mA W	Typ. radiation angle* °
	LED modules Ø 50 mm – XP											
new	WU-M-403-XP-2700K W1	**545185**	warm white	2700 -120/+175	80	1300	1400	not allowed		27.7	not allowed	110
new	WU-M-403-XP-3000K W1	**545187**	warm white	3000 -130/+220	80	1400	1500	not allowed		27.7	not allowed	110
new	WU-M-403-XP-4000K W1	**545189**	neutral white	4000 -300/+260	80	1400	1500	not allowed		27.7	not allowed	110
new	WU-M-403-XP-4000K W2	**545680**	neutral white	4000 -300/+260	80	1600	1700	not allowed		27.7	not allowed	110
	LED modules Ø 50 mm – NV											
new	WU-M-403-NV-2700K W1	**546283**	warm white	2700 -120/+175	80	2072	2220	2800	3000	27.6	44.1	115
new	WU-M-403-NV-3000K W1	**546271**	warm white	3000 -130/+220	80	2220	2405	3000	3250	27.6	44.1	115
new	WU-M-403-NV-4000K W1	**546284**	neutral white	4000 -300/+260	80	2220	2405	3000	3250	27.6	44.1	115
	LED modules Ø 56 mm											
new	WU-M-404-NV-2700K W1	**546285**	warm white	2700 -120/+175	80	2072	2220	2800	3000	32.2	51.5	125
new	WU-M-404-NV-3000K W1	**546272**	warm white	3000 -130/+220	80	2220	2405	3000	3250	32.2	51.5	125
new	WU-M-404-NV-4000K W1	**546286**	neutral white	4000 -300/+260	80	2220	2405	3000	3250	32.2	51.5	125
new	WU-M-405-NV-2700K W1	**546287**	warm white	2700 -120/+175	80	2405	2590	3250	3500	36.8	58.8	125
new	WU-M-405-NV-3000K W1	**546273**	warm white	3000 -130/+220	80	2590	2775	3500	3750	36.8	58.8	125
new	WU-M-405-NV-4000K W1	**546288**	neutral white	4000 -300/+260	80	2590	2775	3500	3750	36.8	58.8	125

* Measurement tolerance of luminous flux: ± 7% | Emission data at t_c = 65 °C

Conection cable for cooling element

For connection of an active cooling element

Type: WU-VB-009-300 mm

new **Ref. No.: 545356**

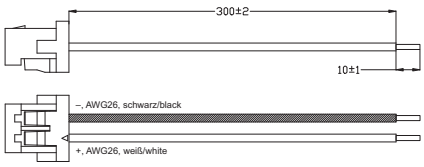



LUGA Shop 2000/3000/4000 lm



Built-in lighting modules

These LED modules are suitable for use in all retail areas – from shop windows, through refrigerated counters right up to mobile food units at markets.

The COB technology on the ceramic PCB guarantees excellent light quality in combination with a very long service life. The stable casing protects the PCB from mechanical stress and ensures high compatibility with numerous reflectors and cooling solutions.

VS LED COB modules are available in various tones of white (2700 K, 3000 K, 4000 K). Plug-in connectors enable simple, low-cost and solder-free terminal connections.

Technical notes

Dimensions: Ø 50 mm
On-board push-in connector
Casing material: PET
Allowed operating temperature at t_c point:
–20 to 65 °C
Fixing pillars: Ø 3.2 mm
Temperature fail-safe circuit:
activation temperature $t_c \approx 105$ °C
Use of external LED constant-current drivers required
Colour rendering index R_a: typ. 82
Colour accuracy initially: 3 SDCM per BIN;
after 50,000 hrs operating time: 4 SDCM per BIN
ESD protection class 2
Minimum order quantity: 100 pcs.

Typical applications

Integration in
- Reflector luminaires (20/35 W HIT replacement)
- Flat surface-mounting luminaires
- Cladding illumination
- Suspended luminaire with external control gear

For use in
- Shop design
- Furniture lighting
- Stairway and corridor illumination

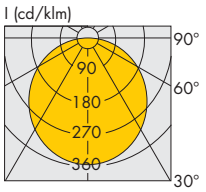

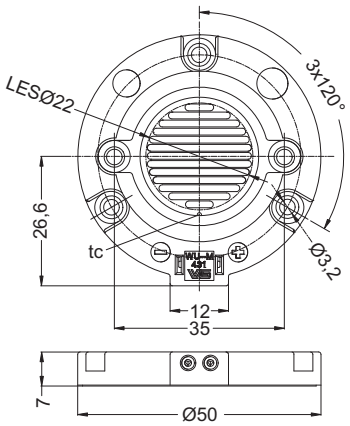

WU-M-431

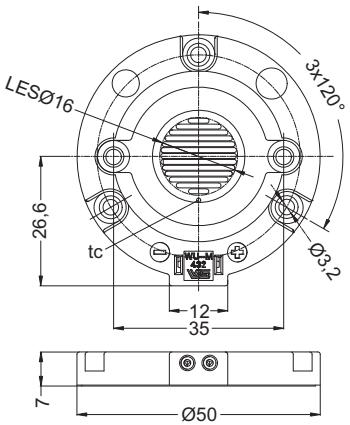

WU-M-432

	Type	Ref. No.	Colour	Correlated colour temperature K	Luminous flux* (lm) at 350 mA (P_{el} = 15 W) min.	typ.	700 mA (P_{el} = 30.7 W) min.	typ.	1050 mA (P_{el} = 46.8 W) min.	typ.	Typ. radiation angle °	CRI** R_a typ.
new	WU-M-431-2700K	**548381**	warm white	2700 -90/+90	1468	1600	2666	2908	3519	3825	120	82
new	WU-M-431-3000K	**548382**	warm white	3000 -150/+80	1509	1681	2736	3070	3605	4006	120	82
new	WU-M431-4000K	**548383**	neutral white	4000 -270/+130	1559	1732	2834	3150	3719	4140	120	82
new	WU-M-432-2700K	**548384**	warm white	2700 -90/+90	927	1018	1648	1793	not allowed	not allowed	120	82
new	WU-M-432-3000K	**548385**	warm white	3000 -150/+80	958	1079	1687	1884	not allowed	not allowed	120	82
new	WU-M-432-4000K	**548386**	neutral white	4000 -270/+130	998	1109	1745	1947	not allowed	not allowed	120	82

Preliminary data

* Measurement tolerance of luminous flux: ± 7% | Emission data at t_c = 65 °C

** CRI R_a > 90 on request

LUGA Shop
5500 lm



Built-in lighting modules
These LED modules are suitable for use in all retail areas – from shop windows, through refrigerated counters right up to mobile food units at markets.

The COB technology on the ceramic PCB guarantees excellent light quality in combination with a very long service life. The stable casing protects the PCB from mechanical stress and ensures high compatibility with numerous reflectors and cooling solutions.

VS LED COB modules are available in various tones of white (2700 K, 3000 K, 4000 K). Plug-in connectors enable simple, low-cost and solder-free terminal connections.

Technical notes
Dimensions: Ø 46.2 x 44.8 mm
On-board push-in connector
Casing material: PET
Allowed operating temperature at t_c point:
–20 to 65 °C
Fixing pillars: Ø 3.2 mm
Temperature fail-safe circuit:
activation temperature $t_c \approx 105$ °C
Use of external LED constant-current drivers required
Colour rendering index R_a: typ. 82
Colour accuracy initially: 3 SDCM per BIN;
after 50,000 hrs operating time: 4 SDCM per BIN
ESD protection class 2
Minimum order quantity: 100 pcs.

Typical applications
Integration in
- Reflector luminaires (50/70 W HIT replacement)
- Flat surface-mounting luminaires
- Cladding illumination
- Suspended luminaire with external control gear

For use in
- Shop design
- Furniture lighting
- Stairway and corridor illumination

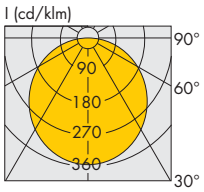

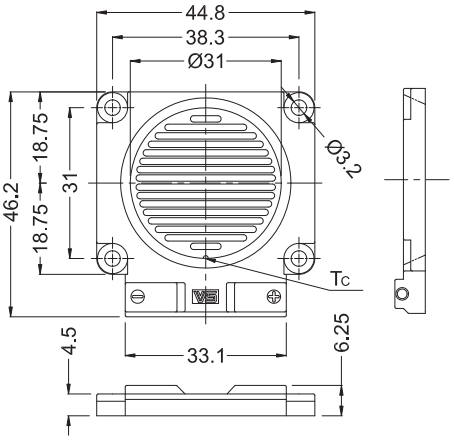

	Type	Ref. No.	Colour	Correlated colour temperature K	Luminous flux (lm) at* 700 mA (P_{el} = 35.3 W) min.	typ.	1050 mA (P_{el} = 55.3 W) min.	typ.	Typ. radiation angle °	CRI** R_a typ.
new	WU-M-437-2700K	**548826**	warm white	2700 $^{-90/+90}$	3524	3838	4809	5234	120	82
new	WU-M-437-3000K	**548827**	warm white	3000 $^{-150/+90}$	3615	4020	4928	5481	120	82
new	WU-M-437-4000K	**548828**	neutral white	4000 $^{-230/+130}$	3737	4152	5096	5669	120	82

Preliminary data

* Measurement tolerance of luminous flux: ± 7% | Emission data at t_c = 65 °C

** CRI R_a > 90 on request

new

LED Roadway Light ME/S



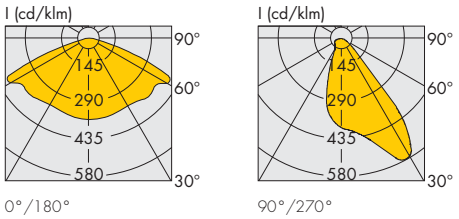

Built-in lighting modules
These LED modules are suitable for standard-compliant street lighting in accordance with EN 13201.

The combination of a robust aluminium base and the IP67 degree of protection enables a simpler, modular luminaire design. The optics attachments guarantee optimum illumination given an installation ratio of 4.5 : 1 (height of the luminaire pole to the distance between luminaire poles).

The VS ECXd 700/150 W LED driver enables power reduction via phase inversion.

The modules are available in three white tones and are both impact- and vibration-proof.

Technical notes
Dimensions incl. optics (LxWxH): 120x120x16 mm
Encapsulated for outdoor applications with degree of proteciton IP67
16 high-efficient High Power LEDs, serial connected
Pre-assembled leads, length: 500 mm
2 leads: + (red); – (blue) for luminaires of protection class II
3 leads: + (red); – (blue); earth (green/yellow) for luminaires of protection class I
Allowed operating temperature at t_c point at I_F = 700 mA: –20 to 70 °C
Use of external LED constant-current drivers required
Design for optimum thermal management
Colour rendering index R_a: > 80
ESD protection class 2
Surge protection: 4 kV
Minimum order quantity: 60 pcs.

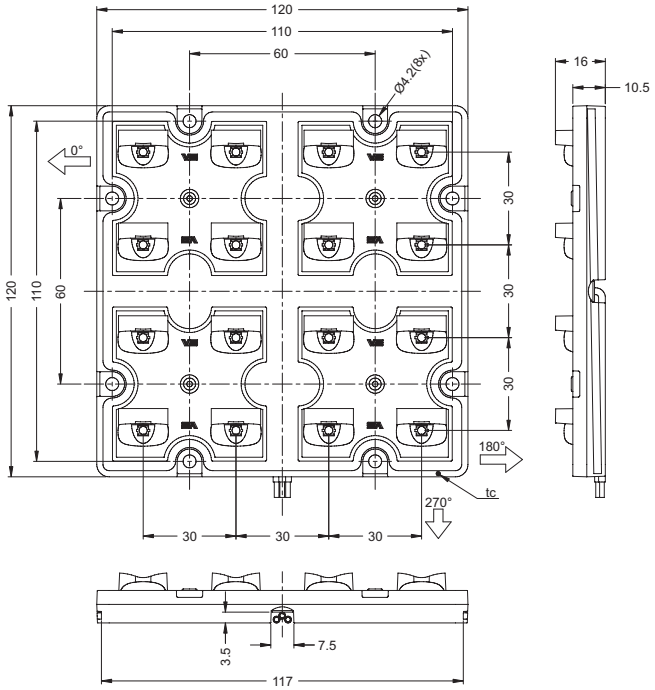

Typical applications
Integration in outdoor luminaires
Street lighting for class ME and S (acc. EN 13201)

	Type	Ref. No. Number of leads: 2	Ref. No. Number of leads: 3	Colour	Correlated colour temperature K	Luminous flux * (lm) at 400 mA P_{el} = 18 W min.	typ.	700 mA P_{el} = 35 W min.	typ.	1050 mA P_{el} = 56.6 W min.	typ.	1400 mA P_{el} = 80 W min.	typ.	Spacing pole distance to pole height	CRI R_a
new	WU-M-425-WW	**547230**	**547233**	warm white	3000 -130/+220	1540	1700	2450	2700	3300	3630	4020	4430	4.5:1 asymmetric	> 80
new	WU-M-425-NW	**547229**	**547232**	neutral white	4000 -300/+260	1700	1875	2700	2950	3630	3960	4440	4840	4.5:1 asymmetric	> 80
new	WU-M-425-CW	**547228**	**547231**	cool white	5000 -255/+310	1700	1875	2700	2950	3630	3960	4440	4840	4.5:1 asymmetric	> 80
new	WU-M-425-CW-LOWCRI	**549056**	**549057**	cool white	5000 -400/+600	2020	2185	3235	3485	4325	4660	5250	5655	4.5:1 asymmetric	~ 70

* Measurement tolerance of luminous flux: ± 7% | Emission data at t_c = 65 °C

LED Roadway Light ME/S Linear



Built-in lighting modules
These LED modules are suitable for standard-compliant street lighting in accordance with EN 13201.

The combination of a robust base and the IP67 degree of protection enables a simpler, modular luminaire design. The optics attachments guarantee optimum illumination given an installation ratio of 4.5 : 1 (height of the luminaire pole to the distance between luminaire poles).

The VS ECXd 700/150 W LED driver enables power reduction via phase inversion.

The modules are available in three white tones and are both impact- and vibration-proof.

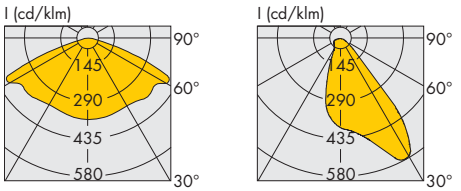

0°/180° 90°/270°

Technical notes
Dimensions incl. Optics (LxWxH): 240x60x16 mm
Encapsulated for outdoor applications with degree of proteciton IP67
16 high-efficient High Power LEDs, serial connected
Pre-assembled leads, length: 500 mm
2 leads: + (red); – (blue) for luminaires of protection class II
Allowed operating temperature at t_c point at I_F = 700 mA: –20 to 70 °C
Use of external LED constant-current drivers required
Design for optimum thermal management
Colour rendering index R_a: > 80
ESD protection class 2
Surge protection: 4 kV
Minimum order quantity: 60 pcs.

WU-M-438 cross

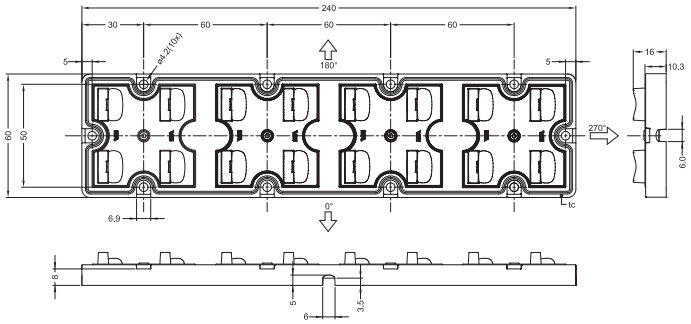

WU-M-438 length

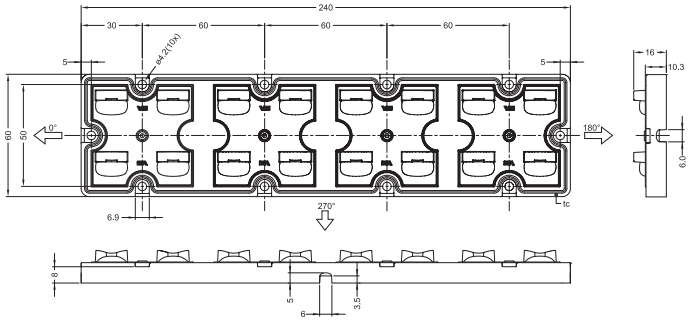

Typical applications
Integration in outdoor luminaires
Street lighting for class ME and S (acc. EN 13201)

	Type	Ref. No.	Colour	Correlated colour temperature*	Luminous flux* (lm) 400 mA (P_{el} = 18 W)		700 mA (P_{el} = 35 W)		1050 mA (P_{el} = 56.6 W)		1400 mA (P_{el} = 80 W)		Spacing pole distance to pole height	CRI
				K	min.	typ.	min.	typ.	min.	typ.	min.	typ.		R_a
	Modules with optics crosswise													
new	WU-M-438-WW	**548568**	warm white	3000 -130/+220	1540	1700	2450	2700	3300	3630	4020	4430	4.5:1 asymmetric	> 80
new	WU-M-438-NW	**548567**	neutral white	4000 -300/+260	1700	1875	2700	2950	3630	3960	4440	4840	4.5:1 asymmetric	> 80
new	WU-M-438-CW	**548566**	cool white	5000 -255/+310	1700	1875	2700	2950	3630	3960	4440	4840	4.5:1 asymmetric	> 80
new	WU-M-438-CW-LOWCRI	**549145**	cool white	5000 -400/+600	2020	2185	3235	3485	4325	4660	5250	5655	4.5:1 asymmetric	~70
	Modules with optics lengthwise													
new	WU-M-438WW	**548506**	warm white	3000 -130/+220	1540	1700	2450	2700	3300	3630	4020	4430	4.5:1 asymmetric	> 80
new	WU-M-438-NW	**548505**	neutral white	4000 -300/+260	1700	1875	2700	2950	3630	3960	4440	4840	4.5:1 asymmetric	> 80
new	WU-M-438CW	**548504**	cool white	5000 -255/+310	1700	1875	2700	2950	3630	3960	4440	4840	4.5:1 asymmetric	> 80
new	WU-M-438-CW-LOWCRI	**549146**	cool white	5000 -400/+600	2020	2185	3235	3485	4325	4660	5250	5655	4.5:1 asymmetric	~ 70

* Measurement tolerance of luminous flux: ± 7% | Emission data at t_c = 65 °C

new

LED Roadway Light ME 2x2 LEDs



Built-in lighting modules
These LED modules are suitable for standard-compliant street lighting in accordance with EN 13201.

Using differing numbers of modules enables flexible and simple implementation of different lumen packages for the various lighting classes (ME1–ME6).

Further technical notes on request.

Typical applications
Integration in outdoor luminaires
Street lighting for class ME (acc. EN 13201)

	Type	Ref. No.	Colour	Correlated colour temperature	Luminous flux* (lm) 400 mA (P_{el} = 4.5 W)		700 mA (P_{el} = 8.75 W)		1050 mA (P_{el} = 14.15 W)		1400 mA (P_{el} = 20 W)		Spacing pole distance to pole height	CRI
				K	min.	typ.	min.	typ.	min.	typ.	min.	typ.		R_a
new	on request	**on request**	warm white	3000 -130/+220	385	425	612	675	825	908	1005	1108	4.5:1 asymmetric	> 80
new	on request	**on request**	neutral white	4000 -300/+260	425	487	675	738	908	920	1108	1210	4.5:1 asymmetric	> 80
new	on request	**on request**	cool white	5000 -255/+310	425	487	675	738	908	920	1108	1210	4.5:1 asymmetric	> 80
new	on request	**on request**	cool white	3000 -400/+600	490	527	786	847	1068	1150	1323	1424	4.5:1 asymmetric	~ 70

Preliminary data

LED Modules SMD/COB 10,000 lm

Built-in light modules
The 10,000 lm LED modules are suitable for use both in street lighting as well as high-bay and industrial lighting.

Modules are available with a square and circular light-emitting surface.

Further technical notes on request.

Typical applications
Integration in outdoor luminaires
Street lighting
High-bay lighting



SMD module 10,000 lm

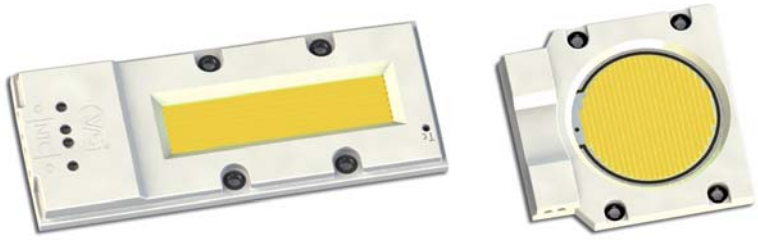

LUGA modules 7,000/10,000 lm

LED modules SMD

	Type	Ref. No.	Colour	Correlated colour temperature K	Typ. luminous flux* at 700 mA lm	CRI R_a	LES-type
new	WU-M-433	**548731**	warm white	3000	7500	80	square
new	WU-M-433	**548732**	neutral white	4000	7500	80	square
new	WU-M-433	**548733**	cool white	5000	10000	70	square
new	WU-M-433	**548728**	warm white	3000	4400	80	square
new	WU-M-433	**548729**	neutral white	4000	4800	80	square
new	WU-M-433	**548730**	cool white	5000	5700	70	square

Preliminary data

LUGA modules COB

	Type	Ref. No.	Colour	Correlated colour temperature K	Typ. luminous flux* at 700 mA lm	CRI R_a	LES-type
new	on request	**on request**	neutral white	3000	7500	80	square
new	on request	**on request**	neutral white	4000	10000	80	round

Preliminary data

new

PowerEmitter XP and XML



Built-in PCB lighting modules
Thanks to the use of highly efficient LEDs, PowerEmitter modules guarantee an extremely high lumen output of up to 731 lm at max. 1050 mA.

The modules can be safely operated with various constant-current converters (350 mA, 500 mA, 700 mA, 1050 mA). Sufficient cooling must be ensured.

Cables have to be soldered onto the solder pads of PowerEmitter modules, which are available in white, neutral white and warm white, to enable terminal connections to be made. The colours of red, green and blue can be made available on request.

To enable the creation of unique light solutions, VS also provides PowerOptics attachments with a variety of radiation angle characteristics (see pages 42 and 43).

Technical notes
PCB diameter: 30 mm
Allowed operating temperature at t_c point:
- –20 to 60 °C for PowerEmitter XP
- –20 to 65 °C for PowerEmitter XML

Use of external LED constant-current drivers required
FR4-PCB with thermal ducts (PowerEmitter XP)
or aluminium PCB (PowerEmitter XML)
for optimum thermal management
Colour rendering index:
- white R_a = 75, warm white R_a = 80

ESD protection class 2
Minimum order quantity: 144 pcs.

Typical applications
Integration in luminaires
Architectural lighting
Marking paths, stairs, etc.
Furniture lighting
Light advertising
Entertainment, shop design

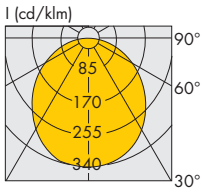

XP-C

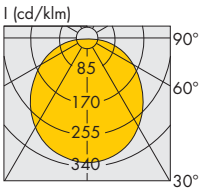

XP-E

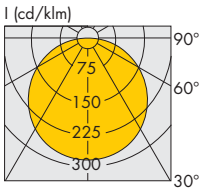

XP-G

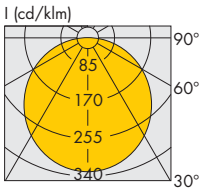

XML

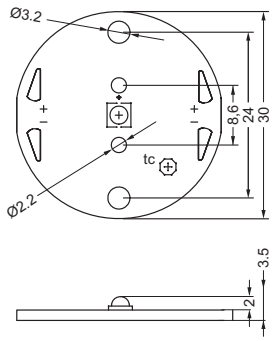

PowerEmitter XP

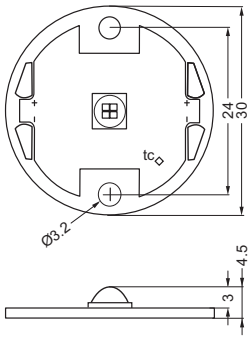

PowerEmitter XML

PowerEmitter XP

	Type	Ref. No.	Colour	Correlated colour temperature	Luminous flux* (lm) at 350 mA (P_{el} = 1.2 W)		500 mA (P_{el} = 1.75 W)		700 mA (P_{el} = 2.4 W)		1050 mA (P_{el} = 3.5 W)		Radiation angle
				K	min.	typ.	min.	typ.	min.	typ.	min.	typ.	°
	PowerEmitter XP-C												
new	WU-M-421-XPC-WW	**546676**	warm white	2870...3200	67.2	80.6	87.4	104.8	not allowed		not allowed		110
new	WU-M-421-XPC-NW	**546671**	neutral white	3700...4260	73.9	87.4	96.1	113.6	not allowed		not allowed		110
new	WU-M-421-XPC-CW	**546673**	white	5650...6950	100.0	114.0	130.0	148.2	not allowed		not allowed		110
	PowerEmitter XP-E												
new	WU-M-421-XPE-WW	**546684**	warm white	2870...3200	80.6	93.9	104.8	122.1	137.0	159.6	not allowed		115
new	WU-M-421-XPE-NW	**546685**	neutral white	3700...4260	93.9	107.0	122.1	139.1	159.6	181.9	not allowed		115
new	WU-M-421-XPE-CW	**546680**	white	5650...6950	107.0	122.0	139.1	158.6	181.9	207.4	not allowed		115
	PowerEmitter XP-G												
new	WU-M-421-XPG-WW	**546688**	warm white	2870...3200	100.0	114.0	140.0	159.6	180.0	205.2	250.0	250.0	125
new	WU-M-421-XPG-NW	**546687**	neutral white	3700...4260	107.0	122.0	149.8	170.8	192.6	219.6	267.5	267.5	125
new	WU-M-421-XPG-CW	**546686**	white	5300...7050	122.0	139.0	170.8	194.6	219.6	250.2	305.0	347.5	125

* Measurement tolerance of luminous flux: ± 7% | Emission data at t_j = 25 °C

PowerEmitter XML

	Type	Ref. No.	Colour	Correlated colour temperature	Luminous flux * (lm) at 350 mA (P_{el} = 4 W)		500 mA (P_{el} = 6 W)		700 mA (P_{el} = 9.3 W)		1050 mA (P_{el} = 12.7 W)		Radiation angle
				K	min.	typ.	min.	typ.	min.	typ.	min.	typ.	°
	PowerEmitter XML												
new	WU-M-424-27K	**548032**	warm white	2650...2790	260	300	325	375	442	510	560	645	115
new	WU-M-424-30K	**548031**	warm white	2950...3125	280	320	350	400	476	544	602	688	115
new	WU-M-424-40K	**548030**	neutral white	3835...4110	300	340	375	425	510	578	645	731	115

* Measurement tolerance of luminous flux: ± 7% | Emission data at t_j = 85 °C

new

TriplePowerEmitter XP



Built-in PCB lighting modules
Thanks to the use of highly efficient LEDs, TriplePowerEmitter modules guarantee an extremely high lumen output of up to 560 lm at max. 700 mA.

The modules can be safely operated with various constant-current drivers (350 mA, 500 mA or 700 mA). Sufficient cooling must be ensured.

The TriplePowerEmitter modules are available in white, neutral white and warm white.

The modules are available without an optical attachment or with a fixed 10°, 15°, 20° or 40° optical attachment to enable the creation of different lighting scenes.

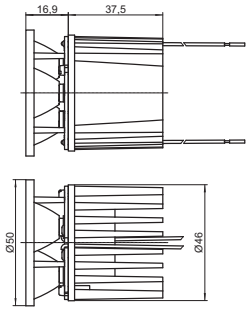



TriplePowerEmitter XP with optics and heat sink

Technical notes
PCB diameter: 45 mm
Allowed operating temperature at t_c point:
–20 to 65 °C
Use of external LED constant-current drivers required
Aluminium PCB for optimum thermal management
Colour rendering index:
white R_a = 75, warm white R_a = 80
ESD protection class 2
Minimum order quantity: 120 pcs.

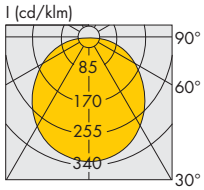

Without optics

Additional technical notes for LED modules with heat sink
Heat sink material: thermoconductive resin
Pre-assembled leads: Cu tinned, stranded conductors AWG22, PVC-insulation, length: 300 mm
Weight: 90 g
Unit: 40 pcs.

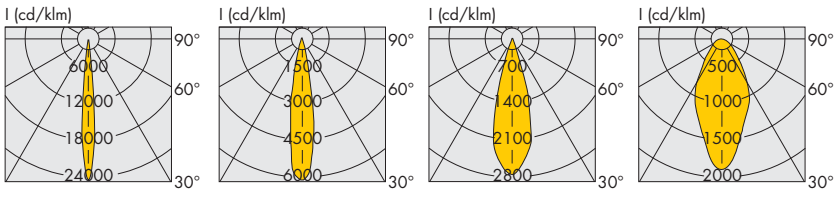

10° 20° 30° 40°

Typical applications
Integration in luminaires
Architectural lighting
Marking paths, stairs, etc
Furniture lighting
Light advertising
Entertainment, shop design

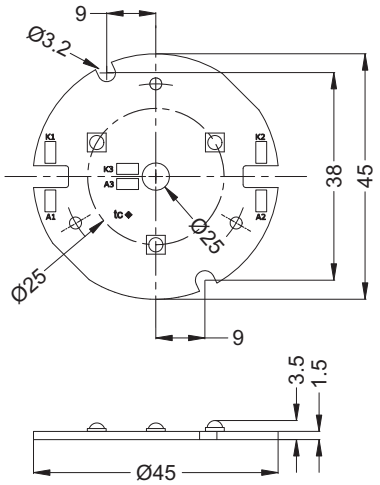

Module without optics

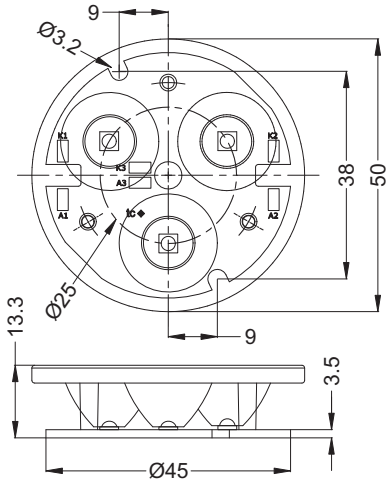

Module with optics

TriplePowerEmitter XP

	Type	Ref. No.	Colour	Correlated colour temperature K	Luminous flux* (lm) at 350 mA (P_{el} = 3.36 W) min.	typ.	500 mA (P_{el} = 4.95 W) min.	typ.	700 mA (P_{el} = 7.14 W) min.	typ.	Radiation angle °
	Without optics										
new	WU-M-422-XPE-WW	**546733**	warm white	2870...3200	241.8	281.7	314.3	366.2	411.1	478.9	115
new	WU-M-422-XPE-NW	**546727**	neutral white	3700...4260	281.7	321.0	366.2	417.3	478.9	545.7	115
new	WU-M-422-XPE-CW	**546729**	cool white	5650...6950	321.0	366.0	417.3	475.8	545.7	622.2	115
	TriplePowerEmitter XP 10°										
new	WU-M-422-XPE-WW-10°	**546741**	warm white	2870...3200	217.6	253.5	282.9	329.6	370.0	431.0	10
new	WU-M-422-XPE-NW-10°	**546736**	neutral white	3700...4260	253.5	288.9	329.6	375.6	431.0	491.1	10
new	WU-M-422-XPE-CW-10°	**546735**	cool white	5650...6950	288.9	329.4	375.6	428.2	491.1	560.0	10
	TriplePowerEmitter XP 20°										
new	WU-M-422-XPE-WW-20°	**546749**	warm white	2870...3200	217.6	253.5	282.9	329.6	370.0	431.0	20
new	WU-M-422-XPE-NW-20°	**546750**	neutral white	3700...4260	253.5	288.9	329.6	375.6	431.0	491.1	20
new	WU-M-422-XPE-CW-20°	**546748**	cool white	5650...6950	288.9	329.4	375.6	428.2	491.1	560.0	20
	TriplePowerEmitter XP 30°										
new	WU-M-422-XPE-WW-30°	**546090**	warm white	2870...3200	217.6	253.5	282.9	329.6	370.0	431.0	30
new	WU-M-422-XPE-NW-30°	**546089**	neutral white	3700...4260	253.5	288.9	329.6	375.6	431.0	491.1	30
new	WU-M-422-XPE-CW-30°	**546088**	cool white	5650...6950	288.9	329.4	375.6	428.2	491.1	560.0	30
	TriplePowerEmitter XP 40°										
new	WU-M-422-XPE-WW-40°	**546757**	warm white	2870...3200	217.6	253.5	282.9	329.6	370.0	431.0	40
new	WU-M-422-XPE-NW-40°	**546756**	neutral white	3700...4260	253.5	288.9	329.6	375.6	431.0	491.1	40
new	WU-M-422-XPE-CW-40°	**546755**	cool white	5650...6950	288.9	329.4	375.6	428.2	491.1	560.0	40

* Measurement tolerance of luminous flux: ± 7% | Emission data at t_j = 25 °C

TriplePowerEmitter XP with Optics and Heat Sink

	Type	Description	Ref. No.	Colour	Correlated colour temperature K	Luminous flux* (lm) at 350 mA P_{el} = 3.36 W min.	typ.	500 mA P_{el} = 4.95 W min.	typ.	700 mA P_{el} = 7.14 W min.	typ.	Radiation angle °
	TripleEmitter XP 10°											
new	LR3W	XPE 3000K min P4	**548875**	warm white	2870...3200	217.6	253.5	282.9	329.6	370.0	431.0	10
new	LR3W	XPE 4000K min Q2	**548879**	neutral white	3700...4260	236.0	261.9	306.8	340.3	401.2	445.0	10
new	LR3W	XPE 6300K min Q4	**548883**	cool white	5650...6950	270.0	298.4	351.0	387.8	459.0	507.2	10
	TripleEmitter XP 20°											
new	LR3W	XPE 3000K min P4	**548874**	warm white	2870...3200	217.6	253.5	282.9	329.6	370.0	431.0	20
new	LR3W	XPE 4000K min Q2	**548878**	neutral white	3700...4260	236.0	261.9	306.8	340.3	401.2	445.0	20
new	LR3W	XPE 6300K min Q4	**548882**	cool white	5650...6950	270.0	298.4	351.0	387.8	459.0	507.2	20
	TripleEmitter XP 30°											
new	LR3W	XPE 3000K min P4	**548873**	warm white	2870...3200	217.6	253.5	282.9	329.6	370.0	431.0	30
new	LR3W	XPE 4000K min Q2	**548877**	neutral white	3700...4260	236.0	261.9	306.8	340.3	401.2	445.0	30
new	LR3W	XPE 6300K min Q4	**548881**	cool white	5650...6950	270.0	298.4	351.0	387.8	459.0	507.2	30
	TripleEmitter XP 40°											
new	LR3W	XPE 3000K min P4	**548872**	warm white	2870...3200	217.6	253.5	282.9	329.6	370.0	431.0	40
new	LR3W	XPE 4000K min Q2	**548876**	neutral white	3700...4260	236.0	261.9	306.8	340.3	401.2	445.0	40
new	LR3W	XPE 6300K min Q4	**548880**	cool white	5650...6950	270.0	298.4	351.0	387.8	459.0	507.2	40

* Measurement tolerance of luminous flux: ± 7% | Emission data at t_j = 25 °C

LED Modules XP

Line XP / Spot XP / Mini XP
Built-in PCB lighting modules

The Line XP, Spot XP and Mini XP modules are available with various highly efficient LED arrays and cover a wide range of applications in the field of general lighting.

Depending on the respective LED array the modules operate with a constant-current of 350 to 1050 mA. Care must be taken to ensure adequate cooling to suit the respective module's power input. Available in white and warm white, the modules are designed for cost-effective and solder-free connection using pre-assembled cables.

To enable the creation of unique light solutions (for street lighting for example), VS also provides optics attachments with a variety of radiation angle characteristics (see pages 42–44).



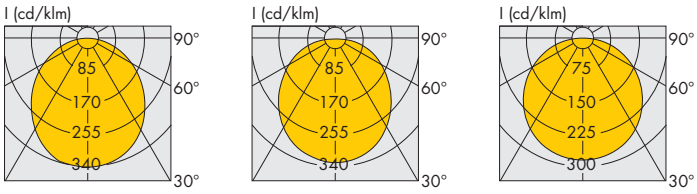

XP-C XP-E XP-G

Technical notes

Dimensions
Line XP: 200x15 mm
Spot XP: Ø 45 mm
Mini XP: 50x10 mm
Pre-assembled with 2 leads
Allowed operating temperature at t_c point:
- –20 to 80 °C for XP-C/XP-E
- –20 to 70 °C for XP-G

Use of external LED constant-current drivers required
Aluminium PCB for optimum thermal management
Colour rendering index:
- white R_a = 75, warm white R_a = 80

ESD protection class 2
Minimum order quantity: 100 pcs.

Typical applications

Integration in luminaires
Architectural lighting
Marking paths, stairs, etc.
Furniture lighting
Light advertising
Shop design
Street lighting

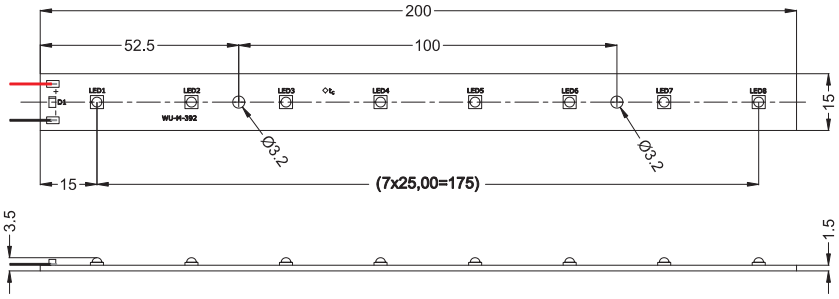

Line XP

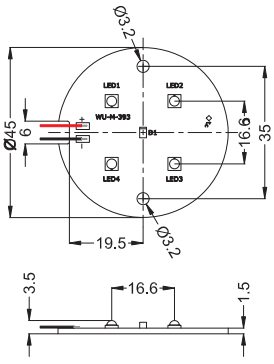

Spot XP

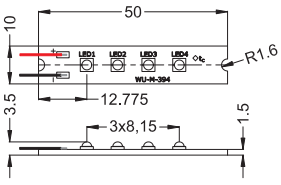

Mini XP

LED Modules XP – Line, Spot, Mini

	Type	Ref. No.	Colour	Correlated colour temp. K	Brightness bin	Luminous flux* at 350 mA lm	500 mA lm	700 mA lm	1050 mA lm	Radiation angle °
	Line XPC – Line XPE – Line XPG					**(P_{el} = 9.6 W)**	**(P_{el} = 14 W)**	**(P_{el} = 19.6 W)**	**(P_{el} = 29.4 W)**	
	WU-M-392-XPC-WW	**543872**	warm white	2720...3040	N4	496.0... 537.6	644.8... 698.6	not allowed	not allowed	110
	WU-M-392-XPC-WW	**543873**	warm white	2720...3040	P2	537.6... 591.2	698.9... 768.6	not allowed	not allowed	110
	WU-M-392-XPC-WW	**543874**	warm white	2720...3040	P3	591.2... 644.8	768.6... 838.2	not allowed	not allowed	110
	WU-M-392-XPC-W	**543871**	white	5650...6950	Q2	699.2... 751.2	909.0... 976.6	not allowed	not allowed	110
	WU-M-392-XPC-W	**543541**	white	5650...6950	Q3	751.2... 800.0	976.6...1040.0	not allowed	not allowed	110
new	WU-M-392-XPC-W	**544673**	white	5650...6950	Q4	800.0... 856.0	1040.0...1112.8	not allowed	not allowed	110
new	WU-M-392-XPC-W	**544674**	white	5650...6950	Q5	856.0... 912.0	1112.8...1185.6	not allowed	not allowed	110
	WU-M-392-XPE-WW	**543886**	warm white	2720...3040	P3	591.2... 644.8	768.6... 838.2	1005.0...1096.2	not allowed	115
	WU-M-392-XPE-WW	**542809**	warm white	2720...3040	P4	644.8... 699.2	838.2... 909.0	1096.2...1188.6	not allowed	115
	WU-M-392-XPE-WW	**543887**	warm white	2720...3040	Q2	699.2... 751.2	909.0... 976.6	1188.6...1277.0	not allowed	115
new	WU-M-392-XPE-WW	**544679**	warm white	2720...3040	Q3	751.2... 800.0	976.6...1040.0	1277.0...1360.0	not allowed	115
	WU-M-392-XPE-W	**543883**	white	5650...6950	Q4	800.0... 856.0	1040.0...1112.8	1360.0...1455.2	not allowed	115
	WU-M-392-XPE-W	**543884**	white	5650...6950	Q5	856.0... 912.0	1112.8...1185.6	1455.2...1550.4	not allowed	115
	WU-M-392-XPE-W	**543531**	white	5650...6950	R2	912.0... 976.0	1185.6...1268.8	1550.4...1659.2	not allowed	115
	WU-M-392-XPE-W	**543885**	white	5650...6950	R3	976.0...1040.0	1268.8...1352.0	1659.2...1768.0	not allowed	115
new	WU-M-392-XPG-WW	**544682**	warm white	2720...3040	Q4	800.0... 856.0	1120.0...1198.4	1440.0...1540.8	2000.0...2140.0	125
new	WU-M-392-XPG-WW	**544683**	warm white	2720...3040	Q5	856.0... 912.0	1198.4...1276.8	1540.8...1641.4	2140.0...2280.0	125
	WU-M-392-XPG-W	**543543**	white	5300...7050	R4	1040.0...1112.0	1456.0...1556.8	1872.0...2001.6	2600.0...2780.0	125
	WU-M-392-XPG-W	**543898**	white	5300...7050	R5	1112.0...1184.0	1556.8...1657.6	2001.6...2131.2	2780.0...2960.0	125
	Spot XPC – Spot XPE – Spot XPG					**(P_{el} = 4.8 W)**	**(P_{el} = 7 W)**	**(P_{el} = 9.8 W)**	**(P_{el} = 14.7 W)**	
	WU-M-393-XPC-WW	**543876**	warm white	2720...3040	N4	248.0... 268.8	322.4... 349.4	not allowed	not allowed	110
	WU-M-393-XPC-WW	**543877**	warm white	2720...3040	P2	268.8... 295.6	349.4... 384.3	not allowed	not allowed	110
	WU-M-393-XPC-WW	**543878**	warm white	2720...3040	P3	295.6... 322.4	384.3... 419.1	not allowed	not allowed	110
	WU-M-393-XPC-W	**543875**	white	5650...6950	Q2	349.6... 375.6	454.5... 488.3	not allowed	not allowed	110
	WU-M-393-XPC-W	**543539**	white	5650...6950	Q3	375.6... 400.0	488.3... 520.0	not allowed	not allowed	110
new	WU-M-393-XPC-W	**544675**	white	5650...6950	Q4	400.0... 428.0	520.0... 556.4	not allowed	not allowed	110
new	WU-M-393-XPC-W	**544676**	white	5650...6950	Q5	428.0... 456.0	556.4... 592.8	not allowed	not allowed	110
	WU-M-393-XPE-WW	**543891**	warm white	2720...3040	P3	295.6... 322.4	384.3... 419.1	502.5... 548.1	not allowed	115
	WU-M-393-XPE-WW	**542810**	warm white	2720...3040	P4	322.4... 349.6	419.1... 454.5	548.1... 594.3	not allowed	115
	WU-M-393-XPE-WW	**543892**	warm white	2720...3040	Q2	349.6... 375.6	454.5... 488.3	594.3... 638.5	not allowed	115
new	WU-M-393-XPE-WW	**544680**	warm white	2720...3040	Q3	375.6... 400.0	488.3... 520.0	638.5... 680.0	not allowed	115
	WU-M-393-XPE-W	**543888**	white	5650...6950	Q4	400.0... 428.0	520.0... 556.4	680.0... 727.6	not allowed	115
	WU-M-393-XPE-W	**543889**	white	5650...6950	Q5	428.0... 456.0	556.4... 592.8	727.6... 775.2	not allowed	115
	WU-M-393-XPE-W	**543533**	white	5650...6950	R2	456.0... 488.0	592.8... 634.4	775.2... 829.6	not allowed	115
	WU-M-393-XPE-W	**543890**	white	5650...6950	R3	488.0... 520.0	634.4... 676.0	829.6... 884.0	not allowed	115
new	WU-M-393-XPG-WW	**544684**	warm white	2720...3040	Q4	400.0... 428.0	560.0... 599.2	720.0... 770.4	770.4...1000.0	125
new	WU-M-392-XPG-WW	**544685**	warm white	2720...3040	Q5	428.0... 456.0	599.2... 638.4	770.4... 820.8	820.8...1070.0	125
	WU-M-393-XPG-W	**543545**	white	5300...7050	R4	520.0... 556.0	728.0... 778.4	936.0...1000.8	1300.0...1390.0	125
	WU-M-393-XPG-W	**543899**	white	5300...7050	R5	556.0... 592.0	778.4... 828.8	1000.8...1065.6	1390.0...1480.0	125
	Mini XPC – Mini XPE – Mini XPG					**(P_{el} = 4.8 W)**	**(P_{el} = 7 W)**	**(P_{el} = 9.8 W)**	**(P_{el} = 14.7 W)**	
	WU-M-394-XPC-WW	**543880**	warm white	2720...3040	N4	248.0... 268.8	322.4... 349.4	not allowed	not allowed	110
	WU-M-394-XPC-WW	**543881**	warm white	2720...3040	P2	268.8... 295.6	349.4... 384.3	not allowed	not allowed	110
	WU-M-394-XPC-WW	**543882**	warm white	2720...3040	P3	295.6... 322.4	384.3... 419.1	not allowed	not allowed	110
	WU-M-394-XPC-W	**543879**	white	5650...6950	Q2	349.6... 375.6	454.5... 488.3	not allowed	not allowed	110
	WU-M-394-XPC-W	**543537**	white	5650...6950	Q3	375.6... 400.0	488.3... 520.0	not allowed	not allowed	110
new	WU-M-394-XPC-W	**544677**	white	5650...6950	Q4	400.0... 428.0	520.0... 556.4	not allowed	not allowed	110
new	WU-M-394-XPC-W	**544678**	white	5650...6950	Q5	428.0... 456.0	556.4... 592.8	not allowed	not allowed	110

* Measurement tolerance of luminous flux: ± 7% | Emission data at t_j = 25 °C

LED Modules XP – Line, Spot, Mini

	Type	Ref. No.	Colour	Correlated colour temp. K	Brightness bin	Luminous flux* at 350 mA lm	500 mA lm	700 mA lm	1050 mA lm	Radiation angle °
	Mini XPC – Mini XPE – Mini XPG					**(P_{el} = 4.8 W)**	**(P_{el} = 7 W)**	**(P_{el} = 9.8 W)**	**(P_{el} = 14.7 W)**	
	WU-M-394-XPE-WW	**543896**	warm white	2720...3040	P3	295.6... 322.4	384.3... 419.1	502.5... 548.1	not allowed	115
	WU-M-394-XPE-WW	**542811**	warm white	2720...3040	P4	322.4... 349.6	419.1... 454.5	548.1... 594.3	not allowed	115
	WU-M-394-XPE-WW	**543897**	warm white	2720...3040	Q2	349.6... 375.6	454.5... 488.3	594.3... 638.5	not allowed	115
new	WU-M-394-XPE-WW	**544681**	warm white	2720...3040	Q3	375.6... 400.0	488.3... 520.0	638.5... 680.0	not allowed	115
	WU-M-394-XPE-W	**543893**	white	5650...6950	Q4	400.0... 428.0	520.0... 556.4	680.0... 727.6	not allowed	115
	WU-M-394-XPE-W	**543894**	white	5650...6950	Q5	428.0... 456.0	556.4... 592.8	727.6... 775.2	not allowed	115
	WU-M-394-XPE-W	**543535**	white	5650...6950	R2	456.0... 488.0	592.8... 634.4	775.2... 829.6	not allowed	115
	WU-M-394-XPE-W	**543895**	white	5650...6950	R3	488.0... 520.0	634.4... 676.0	829.6... 884.0	not allowed	115
new	WU-M-394-XPG-WW	**544686**	warm white	2720...3040	Q4	400.0... 428.0	560.0... 599.2	720.0... 770.4	770.4...1000.0	125
new	WU-M-394-XPG-WW	**544687**	warm white	2720...3040	Q5	428.0... 456.0	599.2... 638.4	770.4... 820.8	820.8...1070.0	125
	WU-M-394-XPG-W	**543900**	white	5300...7050	R4	520.0... 556.0	728.0... 778.4	936.0...1000.8	1300.0...1390.0	125
	WU-M-394-XPG-W	**543901**	white	5300...7050	R5	556.0... 592.0	778.4... 828.8	1000.8...1065.6	1390.0...1480.0	125

* Measurement tolerance of luminous flux: ± 7% | Emission data at t_j = 25 °C

Modules Spot XP with Optics and Heat Sink



Additional technical notes for LED modules with heat sink

Heat sink material: thermoconductive resin
Pre-assembled leads: Cu tinned, stranded conductors
AWG22, PVC-insulation, length: 300 mm
Allowed operating temperature at t_c point:
–20 to 80 °C
Weight: 90 g
Unit: 40 pcs.

Typical applications

Integration in luminaires
Architectural lighting
Marking paths, stairs, etc.
Furniture lighting
Light advertising
Shop design
Street lighting

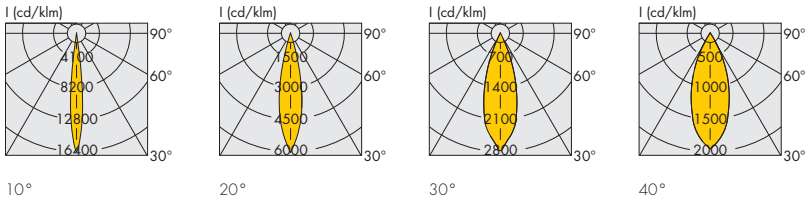

10° 20° 30° 40°

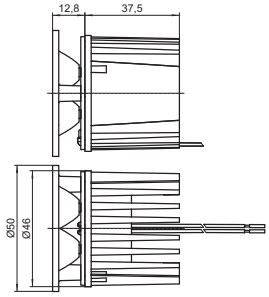

LED Spot XP with optics and heat sink

	Type	Description	Ref. No.	Colour	Correlated colour temperature K	Luminous flux* (lm) at 350 mA (P_{el} = 4.48 W) min.	typ.	500 mA (P_{el} = 6.6 W) min.	typ.	700 mA (P_{el} = 9.52 W) min.	typ.	Radiation angle °
	LEDSpot modules XP 4 10°											
new	LR4W	XPE 3000K min P4	**547790**	warm white	2870...3200	290.2	327.6	377.2	425.9	493.3	556.9	10
new	LR4W	XPE 4000K min Q2	**548864**	neutral white	3700...4260	314.6	349.2	409.0	453.7	534.9	593.3	10
new	LR4W	XPE 6300K min Q4	**547798**	cool white	5650...6950	360.0	397.8	468.0	517.1	612.0	676.3	10
	LEDSpot modules XP 4 20°											
new	LR4W	XPE 3000K min P4	**547789**	warm white	2870...3200	290.2	327.6	377.2	425.9	493.3	556.9	20
new	LR4W	XPE 4000K min Q2	**547940**	neutral white	3700...4260	314.6	349.2	409.0	453.7	534.9	593.3	20
new	LR4W	XPE 6300K min Q4	**547797**	cool white	5650...6950	360.0	397.8	468.0	517.1	612.0	676.3	20
	LEDSpot modules XP 4 30°											
new	LR4W	XPE 3000K min P4	**547788**	warm white	2870...3200	290.2	327.6	377.2	425.9	493.3	556.9	30
new	LR4W	XPE 4000K min Q2	**548863**	neutral white	3700...4260	314.6	349.2	409.0	453.7	534.9	593.3	30
new	LR4W	XPE 6300K min Q4	**547796**	cool white	5650...6950	360.0	397.8	468.0	517.1	612.0	676.3	30
	LEDSpot modules XP 4 40°											
new	LR4W	XPE 3000K min P4	**547726**	warm white	2870...3200	290.2	327.6	377.2	425.9	493.3	556.9	40
new	LR4W	XPE 4000K min Q2	**547837**	neutral white	3700...4260	314.6	349.2	409.0	453.7	534.9	593.3	40
new	LR4W	XPE 6300K min Q4	**547795**	cool white	5650...6950	360.0	397.8	468.0	517.1	612.0	676.3	40

* Measurement tolerance of luminous flux: ± 7% | Emission data at t_j = 25 °C

new

LED Modules HC

Line HC / Spot HC / Mini HC
Built-in PCB lighting modules

The high colour rendering index of up to R_a = 92 and high efficiency values of typically 75 lm/W of Line HC, Spot HC and Mini HC modules clearly set them apart from the competition and make them ideal for shop and interior lighting.

These HC modules (HC = high colour rendering index) operate with a constant-current of between 350 and 700 mA. Care must be taken to ensure suitable cooling for the respective module's power input.

Available in warm white, the modules are designed for cost-effective and solder-free connection using pre-assembled cables. To enable the creation of unique light solutions, VS also provides optics attachments with a variety of radiation angle characteristics (see page 43).



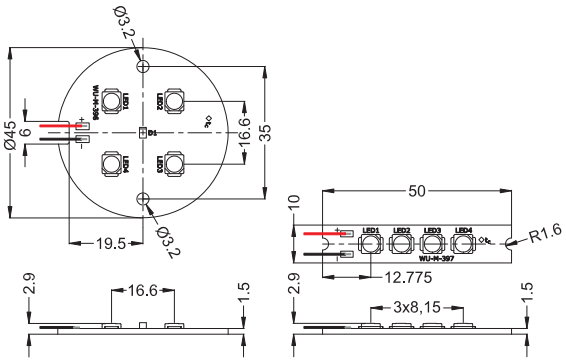

Spot HC

Mini HC

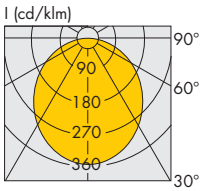

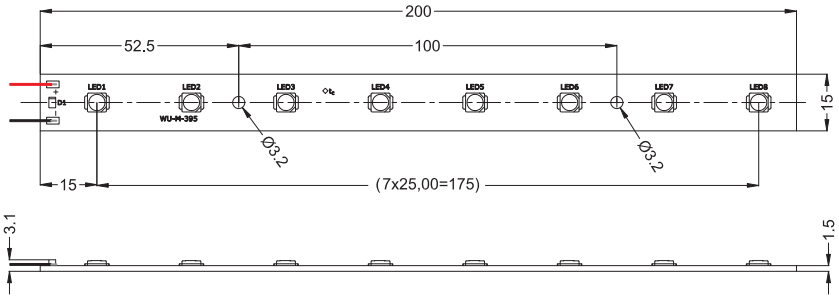

Line HC

Technical notes

Dimensions
Line HC: 200x15 mm
Spot HC: Ø 45 mm
Mini HC: 50x10 mm
Pre-assembled with 2 leads
Allowed operating temperature at t_c point:
–20 to 75 °C
Use of external LED constant-current drivers required
Aluminium PCB for optimum thermal management
ESD protection class 2

Typical applications

Integration in luminaires
Architectural lighting
Shop design
Showcase lighting
Marking paths, stairs, etc.
Furniture lighting
Light advertising

LED Modules HC – Line, Spot, Mini

	Type	Ref. No.	Colour	Correlated colour temperature K	Bright-ness bin	Luminous flux* at 350 mA lm	500 mA lm	700 mA lm	Radiation angle* °	CRI R_a typ.
	Line HC					**(P_{el} = 9.6 W)**	**(P_{el} = 14 W)**	**(P_{el} = 19.6 W)**		
	WU-M-395-WW-H3	**542812**	warm white	2850...3200	C140	616.0...682.0	806.4... 892.8	1120.0...1240.0	120	85
	WU-M-395-WW-H3	**543902**	warm white	2850...3200	C155	682.0...748.0	892.8... 979.2	1240.0...1360.0	120	85
	WU-M-395-WW-H3	**543903**	warm white	2850...3200	C170	748.0...814.0	979.2...1065.6	1360.0...1480.0	120	85
	WU-M-395-WW-H3	**543904**	warm white	2850...3200	C185	814.0...880.0	1065.6...1152.0	1480.0...1600.0	120	85
new	WU-M-395-WW-H1	**545007**	warm white	2850...3200	B06	480.0...560.0	–	–	120	92
new	WU-M-395-WW-H1	**545008**	warm white	2850...3200	B07	560.0...640.0	–	–	120	92
new	WU-M-395-WW-H1	**545009**	warm white	2850...3200	B08	640.0...720.0	–	–	120	92
new	WU-M-395-WW-H1	**545010**	warm white	2850...3200	B09	720.0...800.0	–	–	120	92
	Spot HC					**(P_{el} = 4.8 W)**	**(P_{el} = 7 W)**	**(P_{el} = 9.8 W)**		
	WU-M-396-WW-H3	**542813**	warm white	2850...3200	C140	308.0...341.0	403.2... 446.4	560.0... 620.0	120	85
	WU-M-396-WW-H3	**543905**	warm white	2850...3200	C155	341.0...374.0	446.4... 489.6	620.0... 680.0	120	85
	WU-M-396-WW-H3	**543906**	warm white	2850...3200	C170	374.0...407.0	489.6... 532.8	680.0... 740.0	120	85
	WU-M-396-WW-H3	**543907**	warm white	2850...3200	C185	407.0...440.0	532.8... 576.0	740.0... 800.0	120	85
new	WU-M-396-WW-H1	**545011**	warm white	2850...3200	B06	240.0...280.0	–	–	120	92
new	WU-M-396-WW-H1	**545012**	warm white	2850...3200	B07	280.0...320.0	–	–	120	92
new	WU-M-396-WW-H1	**545013**	warm white	2850...3200	B08	320.0...360.0	–	–	120	92
new	WU-M-396-WW-H1	**545015**	warm white	2850...3200	B09	360.0...400.0	–	–	120	92
	Mini HC					**(P_{el} = 4.8 W)**	**(P_{el} = 7 W)**	**(P_{el} = 9.8 W)**		
	WU-M-397-WW-H3	**542814**	warm white	2850...3200	C140	308.0...341.0	403.2... 446.4	560.0... 620.0	120	85
	WU-M-397-WW-H3	**543908**	warm white	2850...3200	C155	341.0...374.0	446.4... 489.6	620.0... 680.0	120	85
	WU-M-397-WW-H3	**543909**	warm white	2850...3200	C170	374.0...407.0	489.6... 532.8	680.0... 740.0	120	85
	WU-M-397-WW-H3	**543910**	warm white	2850...3200	C185	407.0...440.0	532.8... 576.0	740.0... 800.0	120	85
new	WU-M-397-WW-H1	**545016**	warm white	2850...3200	B06	240.0...280.0	–	–	120	92
new	WU-M-397-WW-H1	**545017**	warm white	2850...3200	B07	280.0...320.0	–	–	120	92
new	WU-M-397-WW-H1	**545018**	warm white	2850...3200	B08	320.0...360.0	–	–	120	92
new	WU-M-397-WW-H1	**545019**	warm white	2850...3200	B09	360.0...400.0	–	–	120	92

* Measurement tolerance of luminous flux: ± 7% | Emission data at t_j = 25 °C

PowerOptics3 for XP and XML Modules

PowerOptics3 were specially developed to supplement VS PowerEmitter making it possible for users to put unique lighting solutions into practice. Use of high-grade optical PMMA enables high efficiency factors of up to 90%.

To guarantee easy mounting, the PowerOptics3 modules are backed with self-adhesive tape. However, depending on the type of application and ambient conditions, the PowerOptics3 module may require additional fixing to ensure secure mounting.

A

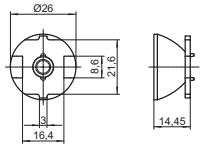



PowerOptics3 – Ø 26 mm

B

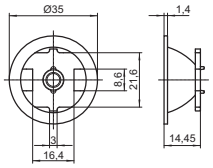



PowerOptics3 – Ø 35 mm

Light distribution curves PowerOptics3

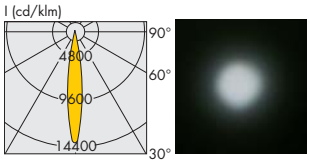

8°

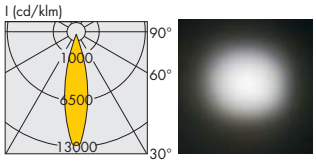

16°

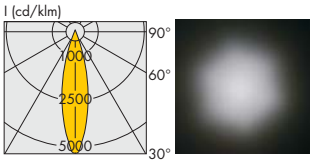

26°

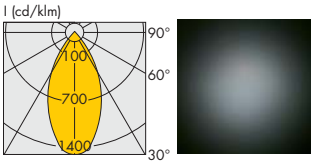

45°

	Type	Ref. No.	Radiation angle* °	Drawing	Dimensions* (mm) diameter/module height
	Optics for VS PowerEmitter XP and XML				
new	PowerOptics3	**547716**	8	A	26/14.6
new	PowerOptics3	**547717**	16	A	26/14.6
new	PowerOptics3	**547718**	26	A	26/14.6
new	PowerOptics3	**547719**	45	A	26/14.6
new	PowerOptics3	**548868**	8	B	35/14.6
new	PowerOptics3	**548869**	16	B	35/14.6
new	PowerOptics3	**548870**	26	B	35/14.6
new	PowerOptics3	**548871**	45	B	35/14.6

* The values mentioned above represent only statistical variables on account of the complex manufacturing process of light emitting diodes.
The values do not necessarily correspond exactly to the actual parameters of every single product which can vary from the typical specification.

PowerOptics for XP and HC Modules

For Line and Spot modules
Various attachable optics are available for the Line and Spot modules of the XP and HC series to enable different radiation characteristics and illumination levels.

VS PowerOptics are made of PMMA, a material of high optical efficiency, and therefore achieve efficiencies of up to 92%.

The optics are available in various radiation angles and are easily attached to the modules using self-adhesive tape. Depending on the type of application or the expected ambient conditions, it may be necessary to supplement this method of fastening to ensure the optics are securely mounted.



PowerOptics XP



PowerOptics HC

Light distribution curves

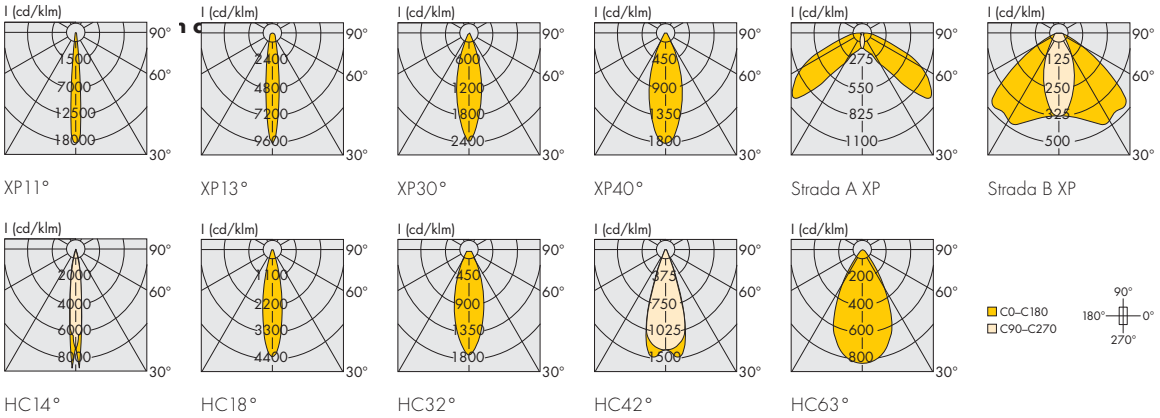

Type	Ref. No.	Radiation angle* °	Dimensions* (mm) diameter x height / width x depth x height
Optics for Line and Spot modules of XP series			
PowerOptics XP 11°	**543422**	11	16.1 x 10.1
PowerOptics XP 13° diff	**543423**	12	16.1 x 10.1
PowerOptics XP 30°	**543424**	30	16.1 x 10.1
PowerOptics XP 40°	**543425**	40	16.1 x 10.1
PowerOpticsStrada A XP	**544036**	100 x 20	19.6 x 15.4 x 10.5
PowerOpticsStrada B XP	**544038**	116 x 44	20.0 x 15.5 x 5.3
Optics for Line and Spot modules of HC series			
PowerOptics HC 14°	**544031**	14	16.1 x 10.1
PowerOptics HC 18° diff	**544032**	18	16.1 x 10.1
PowerOptics HC 32°	**544033**	32	16.1 x 10.1
PowerOptics HC 42°	**544034**	42	16.1 x 10.1
PowerOptics HC 63°	**544035**	63	16.1 x 10.1

* On account of the complex manufacturing process of the modules the above values only represent statistical variables.
The values do not necessarily correspond exactly to the actual parameters of every single product which can vary from the typical specification.

PowerOptics for XP Modules

For TriplePowerEmitter and Spot modules
Various attachable optics are available for TriplePowerEmitter and the Spot modules of the XP series to enable different radiation characteristics and illumination levels.

VS PowerOptics are made of PMMA, a material of high optical efficiency, and therefore achieve efficiencies of up to 92%

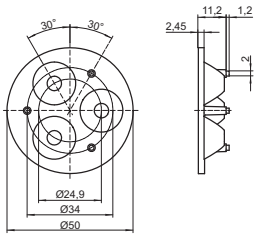


PowerOptics 3XP

Fixing
PowerOptics 3 XP: with glue
PowerOptics 4 XP: by self tapping screw 2.9 mm x H
(H = 6.8 mm + A + B)

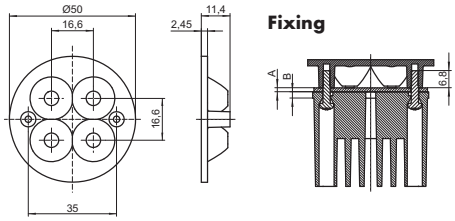


PowerOptics 4XP

Light distribution curves PowerOptics 3XP

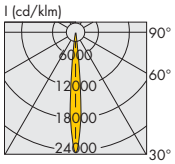

3XP 10°

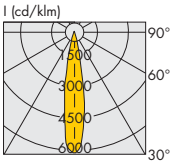

3XP 20°

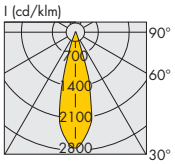

3XP 30°

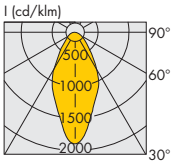

3XP 40°

Light distribution curves PowerOptics 4XP

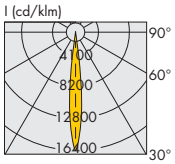

4XP 10°

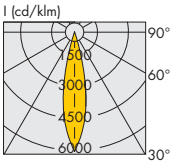

4XP 20°

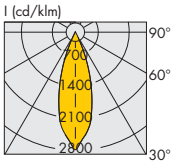

4XP 30°

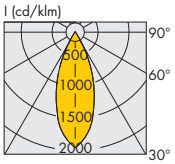

4XP 40°

	Type	Ref. No.	Radiation angle* °	Dimensions* (mm) diameter x height
	Optics for TriplePowerEmitter XP modules			
new	PowerOptics 3XP 10°	**547591**	10	50 x 11.6
new	PowerOptics 3XP 20°	**547589**	20	50 x 11.6
new	PowerOptics 3XP 30°	**547587**	30	50 x 11.6
new	PowerOptics 3XP 40°	**547510**	40	50 x 11.6
	Optics for Spot XP modules			
new	PowerOptics 4XP 10°	**547592**	10	50 x 11.4
new	PowerOptics 4XP 20°	**547590**	20	50 x 11.4
new	PowerOptics 4XP 30°	**547588**	30	50 x 11.4
new	PowerOptics 4XP 40°	**547511**	40	50 x 11.4

* On account of the complex manufacturing process of the modules the above values only represent statistical variables.
The values do not necessarily correspond exactly to the actual parameters of every single product which can vary from the typical specification.

Reflectors for PowerEmitter XP modules
Reflectors generate a high efficiency, round spot with homogeneous light distribution
Material: PC, with reflective aluminium coating
The reflectors are available in two various radiation angles and are easily attached to the modules using self-adhesive tape.
Depending on the type of application or the expected ambient conditions, it may be necessary to supplement this method of fastening to ensure the reflectors are securely mounted.

new **Ref. No.: 548781** 20°
new **Ref. No.: 546370** 45°

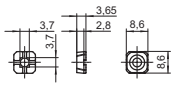



Heat Sinks for LED Modules XP and XML

Under no circumstances may LEDSpots ever be covered by insulation material or similar. Air ventilation must be ensured.

Heat sinks for PowerEmitter XP and XML modules
For LED modules with one XP LED up to 700 mA
For LED modules with one XML LED up to 350 mA
Material: thermoconductive resin
Dimensions: (Ø x depth): 32.4 x 20 mm / 48 x 12.8 mm
Fixing: with screws
Weight: 16.4 g
Unit: 250 pcs.

new **Ref. No.: 548739** drawing/photo A
new **Ref. No.: 544804** drawing/photo B

A

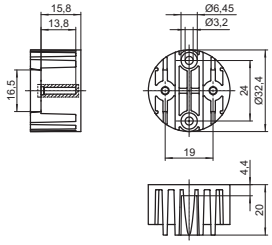



B

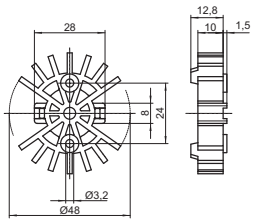

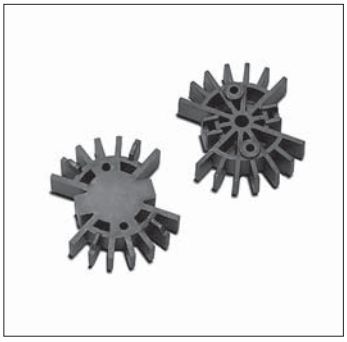

Heat sink for TriplePowerEmitter and Spot XP
For LED modules up to 700 mA
Material: thermoconductive resin
Dimensions: (Ø x depth): 46x 37.5 mm
Fixing: with screws
Weight: 51 g
Unit: 225 pcs.

new **Ref. No.: 544805**

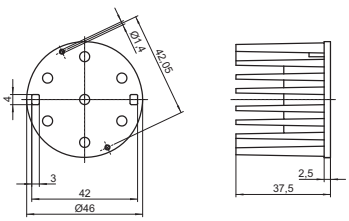



LED Constant Current Drivers

The electronic stabilised power supplies ECXe are optimised to drive VS High Power LED modules. Primary side switching only. Before connecting LED modules ensure that the power supplier is isolated.

Mains voltage: 220–240 V ±10%
Mains frequency: 0 Hz, 50–60 Hz
Electronic short-circuit protection
Overload protection
Protection against "no load" operation
Degree of protection: IP20, protection class II
SELV-equivalent
Power factor: 0.6
Screw terminals: 2.5 mm²
Quantity of screw terminals:
- 1x2-poles primary
- 1x2-poles secondary

With integrated cord grip
(except 186180 and 186175)
Service life time: 50,000 hrs
- permanent operation when maximum temperature $t_{cmax.}$ at t_c point will not be exceeded;
- failure rate: < 0.2% per 1,000 hrs

Additional technical details
350 mA / 42 W – 186175
Mains frequency: 50–60 Hz
Protection class I
Power factor: 0.97
Quantity of push-in terminals:
- 1x2-poles + earth terminal primary
- 1x2-poles secondary

The electronic constant-current source is protected against transient main peaks up to 3 kV (between L and N) and up to 4 kV (between L, N and PE). When using ECXe 350mA/42W together with LED modules in luminaires care must be taken to ensure safety according to EN 60598.



The converters (except ECXe 350mA/42W) are designed for DC-operation (mains frequency: 0 Hz) and can be used for emergency power supplies.

A

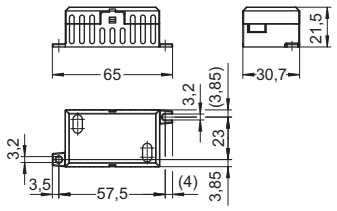

B

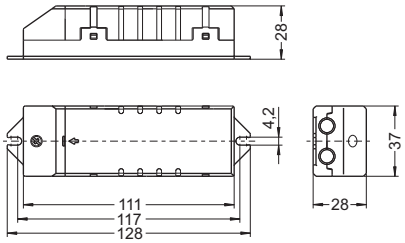

C

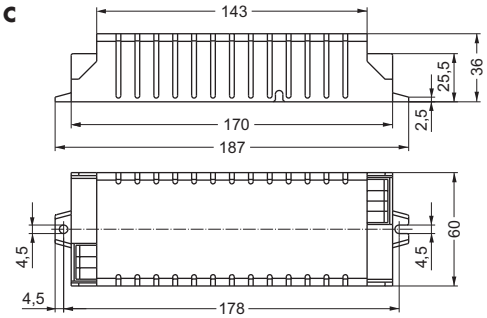

Max. output W	Type	Ref. No.	Mains current mA	Output current mA	Voltage output V	Ambient temperature t_a °C	Casing temperature t_c °C	Drawing	Weight g
Dimensions: 65x30.7x21.5 mm									
8	ECXe 350mA/8W	**186180**	60/65	350 +5%/-10%	2 - 22	- 20 to 50	75	A	33
Dimensions: 128x37x28 mm									
11	ECXe 350mA/11W	**186157**	122/117	350 ±5%	2 - 31	- 20 to 50	70	B	71
16	ECXe 500mA/16W	**186158**	160/155	500 ±5%	2 - 32	- 20 to 50	75	B	71
17	ECXe 700mA/17W	**186159**	188/178	700 ±5%	2 - 34	- 20 to 50	75	B	71
20	ECXe 1050mA/20W	**186160**	210/202	1050 ±5%	2 - 19	- 20 to 45	75	B	71
Dimensions: 187x60x36 mm									
42	ECXe 350mA/42W	**186175**	210/190	350 ±5%	40 - 115	- 30 to 60	65	C	270

LED Constant Current Drivers

700 mA / 40 W and 1050 mA / 60 W
The electronic constant-current drivers are optimised to drive VS HighPower LED modules.
Primary side switching only. Before connecting LED modules ensure that the power supplier is disconnected from mains.

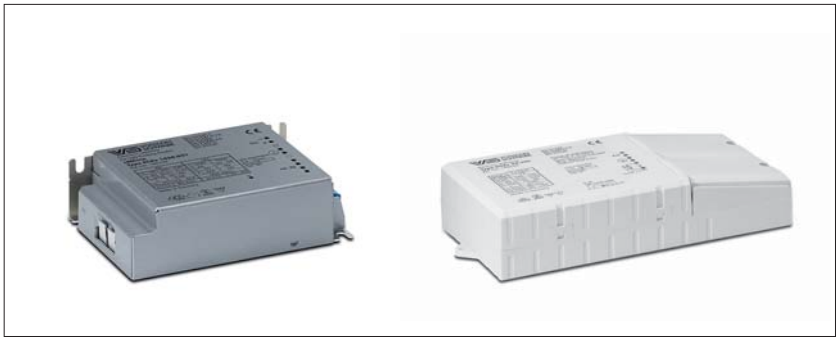

Mains voltage: 220–240 V ±10%
Mains frequency: 0 Hz, 50–60 Hz
Electronic short-circuit protection
Overload and overtemperature protection
Protection against "no load" operation
Degree of proteciton: IP20
For luminaires of protection class I
SELV-equivalent
Power factor: 0.98
Efficiency: > 0.88
Push-in terminals: 0.2–1.5 mm²
Quantity of push-in terminals:
- 6x1-poles terminal primary (L, N, PE)
- 2x1-poles secondary

Service life time: 50,000 hrs
- permanent operation when maximum temperature $t_{cmax.}$ at t_c point will not be exceeded;
- failure rate: < 0.2% per 1,000 hrs

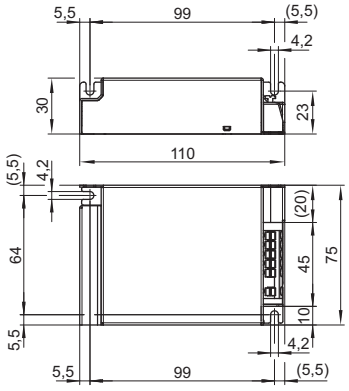

With cord grip

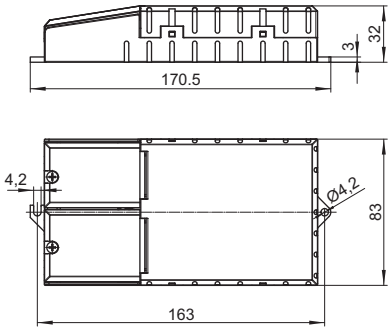

	Max. output W	Type	Ref. No.	Voltage 0 Hz, 50/60 Hz V	Mains current mA	Output current DC mA	Voltage output DC V	Max. voltage without load DC (V)	12 V interface (2 W)	Ambient temperature t_a °C	Casing temperature t_c °C	Weight g
	Dimensions: 110x75x30 mm											
new	40	ECXe 700mA/40W	**186200**	176/264 220/240	250/160 200/180	700 ±5%	20–57	60	no	-20 to 60	75	210
new	40	ECXe 700mA/40W	**on request**	176/264 220/240	250/160 200/180	700 ±5%	20–57	60	yes	-20 to 60	75	210
new	60	ECXe 1050mA/60W	**186198**	176/264 220/240	391/261 308/286	1050 ±5%	20–58	60	no	-20 to 60	80	226
new	60	ECXe 1050mA/60W	**on request**	176/264 220/240	391/261 308/286	1050 ±5%	20–58	60	yes	-20 to 60	80	226
	With cord grip — dimensions: 170.5x83x32 mm											
new	40	ECXe 700mA/40W	**186201**	176/264 220/240	250/160 200/240	700 ±5%	20–57	60	no	-20 to 60	75	257
new	40	ECXe 700mA/40W	**on request**	176/264 220/240	250/160 200/240	700 ±5%	20–57	60	yes	-20 to 60	75	257
new	60	ECXe 1050mA/60W	**186199**	176/264 220/240	391/261 308/286	1050 ±5%	20–58	60	no	-20 to 60	80	273
new	60	ECXe 1050mA/60W	**on request**	176/264 220/240	391/261 308/286	1050 ±5%	20–58	60	yes	-20 to 60	80	273

new

Dimmable LED Constant Current Drivers

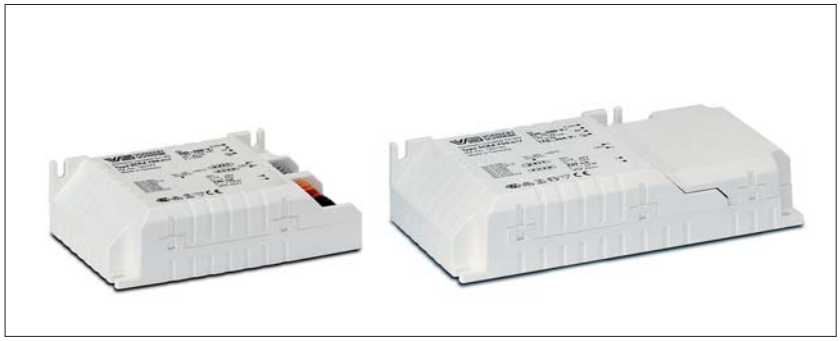

700 mA / 34 W and 1050 mA / 60 W
The constant-current driver of the ECXd series feature a dimming range of 0.5 to 100%. The driver will be in standby mode at a setting of under 0.5%.

The drivers are controllable with DALI controllers or usual push keys. The dimming function is achieved by applying a PWM signal to the nominal current of 700 mA. If no DALI interface is connected, brightness will stay at 100%.

Mains voltage: 220–240 V ±10%
Mains frequency: 0 Hz, 50 – 60 Hz
Electronic short-circuit protection
Overload protection
Protection against "no load" operation
Degree of proteciton: IP20
For luminaires of protection class I
SELV-equivalent
Power factor: 0.97
Efficiency: > 0.85
Standby losses: < 0.5 W
Push-in terminals: 0.5–1.5 mm²
Quantity of push-in terminals:
- 1x3-poles terminal primary (1x1-pole PUSH, 1x2-poles DALI)
- 1x2-poles secondary

Service life time: 50,000 hrs
- permanent operation when maximum temperature $t_{cmax.}$ at t_c point will not be exceeded;
- failure rate: < 0.2% per 1,000 hrs

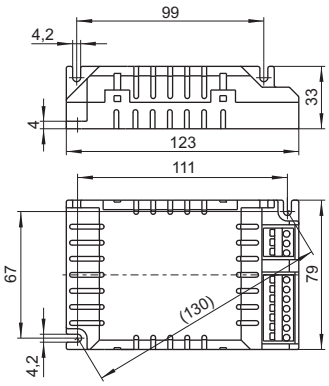

With cord grip

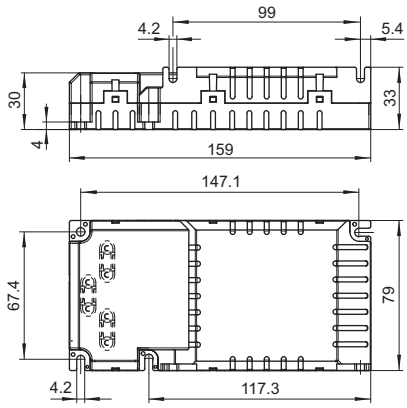

	Max. output W	Type	Ref. No.	Voltage 0 Hz, 50/60 Hz V	Mains current mA	Output current DC mA	Voltage output DC V	Max. voltage without load DC V	12 V interface (2 W)	Ambient temperature t_a °C	Casing temperature t_c °C	Weight g
	Dimensions: 123x79x33 mm											
new	34	ECXd 700mA/34W	**186177**	176/264 220/240	230/160 190/170	700 ±5%	9–48	52	no	-20 to 50	75	180
new	60	ECXd 1050mA/60W	**186196**	176/264 220/240	380/252 305/275	1050 ±5%	20–57	60	yes	-20 to 50	80	220
	With cord grip – dimensions: 159x79x33 mm											
new	34	ECXd 700mA/34W	**186195**	176/264 220/240	230/160 190/170	700 ±5%	9–48	52	no	-20 to 50	75	215
new	60	ECXd 1050mA/60W	**186197**	176/264 220/240	380/252 305/275	1050 ±5%	20–57	60	yes	-20 to 50	80	250

Adjustable and Dimmable LED Constant-current Drivers

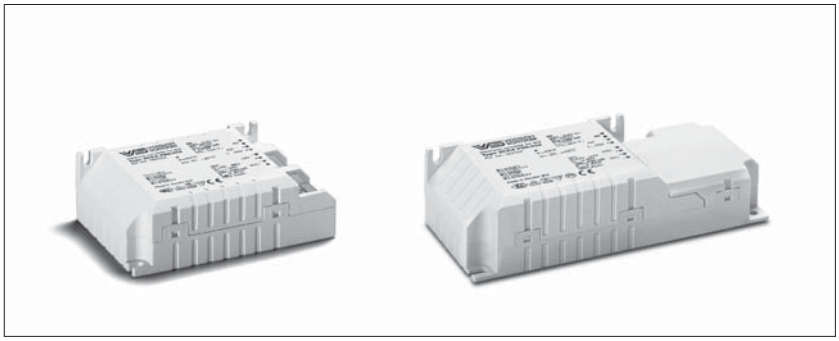

1–10V

350, 500, 600, 700 mA / 40 W

The constant-current drivers of the ECXd series feature a dimming range of 0.5 to 100%.
The dial can be used set the nominal current to 350 mA, 500 mA, 600 mA or 700 mA. The dimming function is achieved by the use of a PWM signal.
If no 1–10 V interface is connected, brightness will stay at 100%.
The LEDs are thermally protected by the driver's NTC interface, which ensures the current will be reduced when a critical temperature is reached.

Mains voltage: 220–240 V ±10%
Mains frequency: 0 Hz, 50–60 Hz
Electronic short-circuit protection
Overload protection
Protection against "no load" operation
Degree of proteciton: IP20
For luminaires of protection class I and II
SELV-equivalent
Power factor: 0.95
Efficiency: > 0.80
Push-in terminals: 0.5–1.5 mm²
Quantity of push-in terminals:
- 1x2-poles primary
- 1x2-poles 1–10 V
- 1x2-poles secondary
- 1x2-poles NTC connection

Service life time: 50,000 hrs
permanent operation when maximum temperature $t_{cmax.}$ at t_c point will not be exceeded;
failure rate: < 0.2% per 1,000 hrs

With cord grip

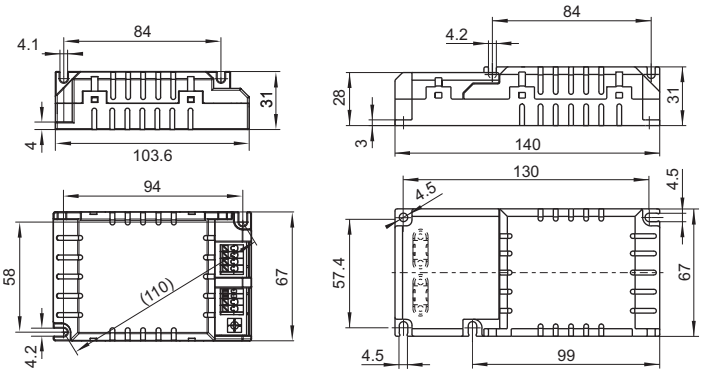

Adjustment	Nominal current mA
1	350
2	500
3	600
4	700

NTC of LED module 220 kΩ	
R (kΩ)	Nominal current (%)
20.7	100
17.3	60
14.6	0 (off)

	Max. output W	Type	Ref. No.	Voltage 0 Hz, 50/60 Hz V	Mains current mA	Output current DC mA	Voltage output DC V	Max. voltage without load DC V	Ambient temperature t_a °C	Casing temperature t_c °C	Weight g
Dimensions: 103.6x67x31 mm											
new	40	ECXd 700mA/40W	**186206**	176/264	280/185	350 +5/-10%	20–57	60	-20 to 50	85	190
				220/240	215/195	500 +5/-10%	20–57	60	-20 to 50		
						600 +5/-10%	20–57	60	-20 to 50		
						700 +5/-10%	20–57	60	-20 to 45		
With cord grip – dimensions: 140x67x31 mm											
new	40	ECXd 700mA/40W	**186207**	176/264	280/185	350 +5/-10%	20–57	60	-20 to 50	85	220
				220/240	215/195	500 +5/-10%	20–57	60	-20 to 50		
						600 +5/-10%	20–57	60	-20 to 50		
						700 +5/-10%	20–57	60	-20 to 45		

Preliminary data

new

Adjustable and Dimmable LED Constant-current Drivers

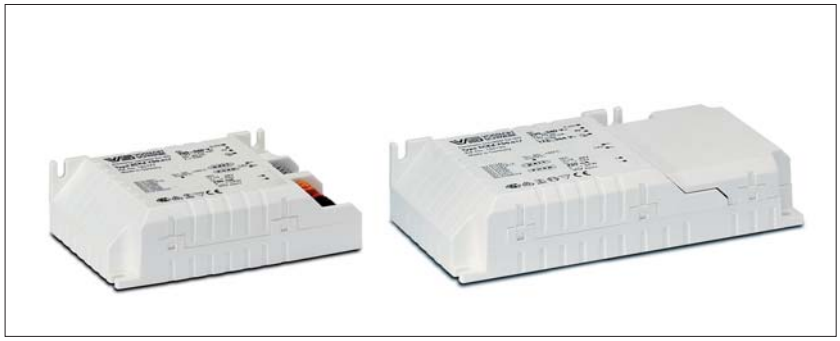

1–10V

800, 900, 1050, 1200 mA / 68 W

The constant-current drivers of the ECXd series feature a dimming range of 1 to 100%.
The dial can be used set the nominal current to 800 mA, 900 mA, 1050 mA or 1200 mA. The dimming function is achieved by the use of a PWM signal.
If no 1–10 V interface is connected, brightness will stay at 100%.

The LEDs are thermally protected by the driver's NTC interface, which ensures the current will be reduced when a critical temperature is reached.

Mains voltage: 220–240 V ±10%
Mains frequency: 0 Hz, 50–60 Hz
Electronic short-circuit protection
Overload protection
Protection against "no load" operation
Degree of proteciton: IP20
For luminaires of protection class I and II
SELV-equivalent, power factor: 0.97
Efficiency: > 0.85
Push-in terminals: 0.5–1.5 mm²
Quantity of push-in terminals:
- 1x2-poles primary
- 1x2-poles 1–10V
- 1x2-poles secondary
- 1x2-poles NTC connection

Service life time: 50,000 hrs
- permanent operation when maximum temperature $t_{cmax.}$ at t_c point will not be exceeded;
- failure rate: < 0.2% per 1,000 hrs

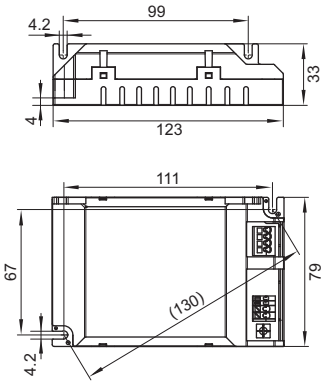

With cord grip

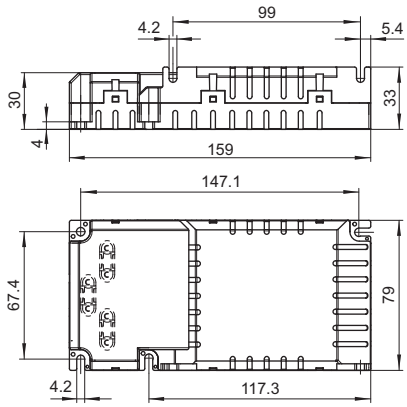

Adjustment	Nominal current mA
1	800
2	900
3	1050
4	1200

NTC of LED module 220 kΩ	
R (kΩ)	Nominal current (%)
20.7	100
17.3	60
14.6	0 (off)

	Max. output W	Type	Ref. No.	Voltage 0 Hz, 50/60 Hz V	Mains current mA	Output current DC mA	Voltage output DC V	Max. voltage without load DC V	Ambient temperature t_a °C	Casing temperature t_c °C	Weight g
Dimensions: 123x79x33 mm											
new	68	ECXd 1200mA/68W	**on request**	176/264	365/340	800 +5/-10%	20–57	60	50	80	260
				220/240	435/290	900 +5/-10%	20–57	60	50	80	260
						1050 +5/-10%	20–57	60	50	80	260
						1200 +5/-10%	20–57	60	50	80	260
With cord grip – dimensions: 159x79x33 mm											
new	68	ECXd 1200mA/68W	**on request**	176/264	365/340	800 +5/-10%	20–57	60	50	80	300
				220/240	435/290	900 +5/-10%	20–57	60	50	80	300
						1050 +5/-10%	20–57	60	50	80	300
						1200 +5/-10%	20–57	60	50	80	300

Preliminary data

Dimmable LED Constant-current Drivers

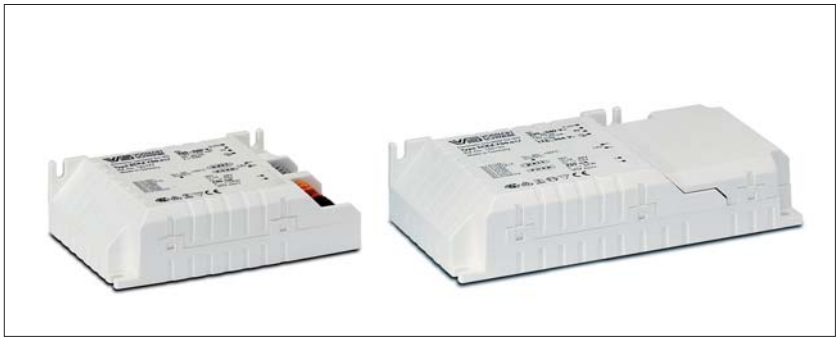

1–10V

1400 mA / 65 W

The constant-current drivers of the ECXd series features a dimming range of 1 to 100%.
The dimming function is achieved by the use of a PWM signal.
If no 1–10 V interface is connected, brightness will stay at 100%.
The LEDs are thermally protected by the driver's NTC interface, which ensures the current is reduced when a critical temperature is reached.

Mains voltage: 220 – 240 V ±10%
Mains frequency: 0 Hz, 50 – 60 Hz
Electronic short-circuit protection
Overload protection
Protection against "no load" operation
Degree of proteciton: IP20
For luminaires of protection class I and II
SELV-equivalent
Power factor: 0.95
Efficiency: > 0.85
Push-in terminals: 0.5–1.5 mm²
Quantity of push-in terminals:
- 1x2-poles primary
- 1x2-poles 1–10 V
- 1x2-poles secondary
- 1x2-poles NTC connection

Service life time: 50,000 hrs
- permanent operation when maximum temperature $t_{cmax.}$ at t_c point will not be exceeded;
- failure rate: < 0.2% per 1,000 hrs

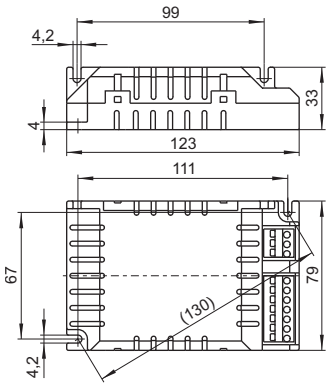

With cord grip

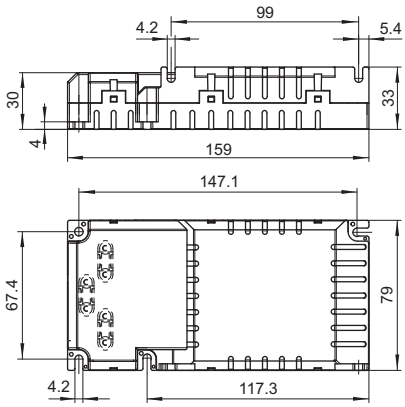

NTC on LED module 220 kΩ	
R (kΩ)	Nominal current (%)
20.7	100
17.3	60
14.6	0 (off)

	Max. output W	Type	Ref. No.	Mains voltage 0 Hz, 50/60 Hz V	Mains current mA	Current output DC mA	Voltage output DC V	Max. voltage without load DC V	Ambient temperature t_a °C	Casing temperature t_c °C	Weight g
Dimensions: 123x79x33 mm											
new	65	ECXd 1400mA/65 W	**186208**	176/264 220/240	430/280 360/340	1400 +5/-10%	20–47	50	50	80	260
With cord grip – dimensions: 159x79x33 mm											
new	65	ECXd 1400mA/65 W	**186209**	176/264 220/240	430/280 360/340	1400 +5/-10%	20–47	50	50	80	300

Preliminary data

new

Adjustable LED Constant-current Drivers

400, 700 mA / 150 W

VS' electronic constant-current sources are designed for use in street lighting systems. They provide a simple power-reduction option by connecting a further phase, which makes it possible to switch between 400 mA and 700 mA.

Mains voltage: 220–277 V ±10%
Mains frequency: 50–60 Hz
Electronic short-circuit protection
Overload and overtemperature protection
Protection against "no load" operation
Degree of proteciton: IP20 or IP67
For luminaires of protection class I
Power factor: 0.97
Efficiency: > 0.9
Service life time: 50,000 hrs
permanent operation when maximum temperature $t_{cmax.}$ at t_c point will not be exceeded;
failure rate: < 0.2% per 1,000 hrs

IP20 driver

Push-in terminals: 0.5–1.5 mm²
Quantity of push-in terminals:
5x1-poles terminal primary
2x1-poles secondary

IP67 driver

Pre-assembled connection leads:
Primary: 5x1 mm², length: 200 mm
Secondary: 2x1.5 mm², length: 200 mm



Additional technical features

The electronic converters are protected against transient main peaks up to 3 kV (between L and N) and up to 4 kV (between L, N and PE).

IP20

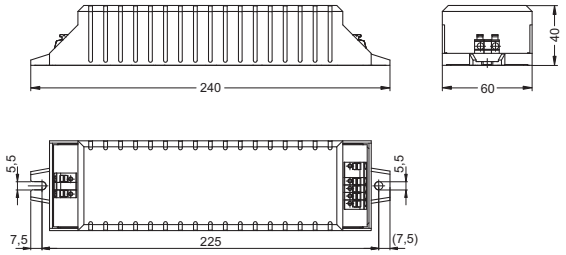

IP67

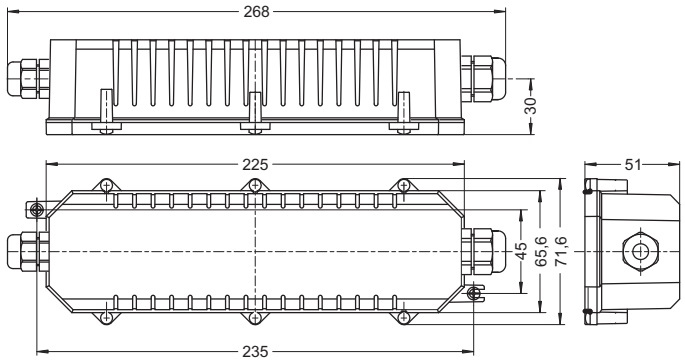

	Max. output W	Type	Ref. No.	Voltage 50/60 Hz V	Mains current mA	Output current DC mA	Voltage output DC V	Max. Voltage without load DC V	Ambient temperature t_a °C	Casing temperature t_c °C	Weight g
	IP20 – dimensions: 240x60x40 mm										
new	150	ECXe 700mA/400mA	**186202**	220–277	740–590	700 ±5% 400 ±5%	48–215 48–375	475	-40 to 60	90	400
	IP67 – dimensions: 268x71.6x51 mm										
new	150	ECXe 700mA/400mA	**186203**	220–277	740–590	700 ±5% 400 ±5%	48–215 48–375	475	-40 to 60	90	560

LED Constant-current Drivers Linear

350 mA/75 W, 350 mA/15 W

VS' linear LED constant-current drivers are designed for use in office and retail lighting. The linear design is particularly suitable for luminaire concepts to replace T5/T8 fluorescent lamps with LEDs.

Mains voltage: 220–240 V ±10%
Mains frequency: 0/50–60 Hz
Electronic short-circuit protection
Overload protection
Protection against "no load" operation
Degree of proteciton: IP20
SELV (ECXe 350mA/15W)
Service life time: 50,000 hrs
permanent operation when maximum temperature $t_{cmax.}$ at t_c point will not be exceeded;
failure rate: < 0.2% per 1,000 hrs

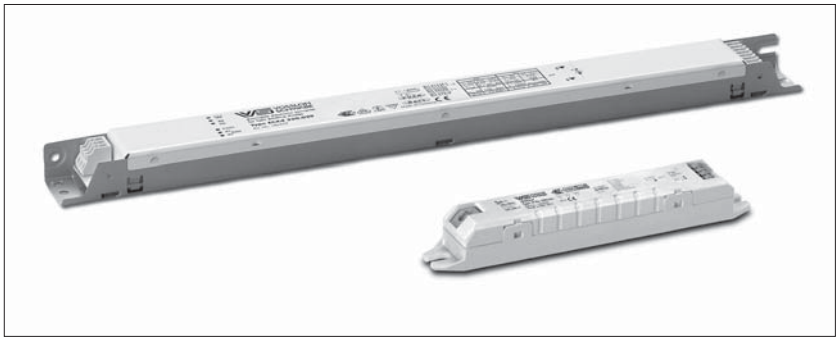

K21

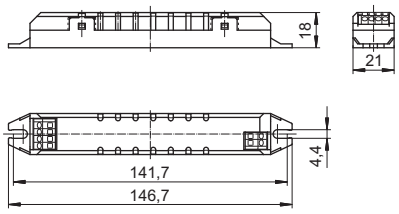

M10

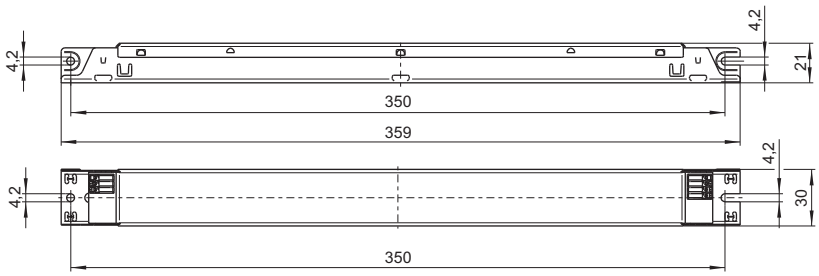

	Max. output W	Type	Ref. No.	Mains voltage 0 Hz, 50/60 Hz V	Mains current mA	Current output DC mA	Voltage output DC V	Max. voltage without load DC V	Ambient temperature t_a °C	Casing temperature t_c °C	Weight g
	Casing: M10										
new	75	ECXe 350mA/75W	**186226**	176/264 220/240	350	350 +5/-10%	90–215	420	-20 to 50	75	215
	Casing: M10 with DALI interface										
new	75	ECXd 350mA/75W	**186227**	176/264 220/240	350	350 +5/-10%	90–215	420	-20 to 50	75	215
	Casing: K21										
new	15	ECXe 350mA/15W	**186229**	176/264 220/240	140	350 +5/-10%	2–40	42	-20 to 50	80	49

Preliminary data

FOR RESIDENTIAL AND FURNITURE LIGHTING

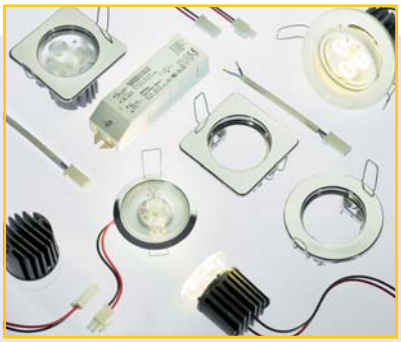



THE PERFECT REPLACEMENT

Convenient LED technology

As the perfect replacement for low-voltage halogen lamps, the new LED modules made by VS are ideal for use in furniture, false ceilings as well as cooker hoods.

These LED modules are available with high-power LEDs and semi-transparent optics attachments. The circular or square metal frame is available in a white, silver, matt silver or gold finish. Furthermore, flexible snap-in fasteners make it extremely easy and quick to exchange halogen spots, which are still in widespread use.

The package is rounded off by a matching LED driver housed in a compact VS LiteLine transformer casing plus a set of cables with pre-assembled plugs for connecting up to two LED modules.

LEDSpot XP/XML with Heat Sink – Round or Square Frame



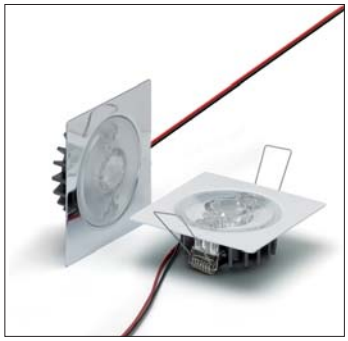

For cut-out: Ø 56 mm
LEDSpot with one LED and with heat sink
for optimum thermal management
Metal frame, round or square: steel
Radiation angle: 60°
Leads: Cu tinned, stranded conductors AWG22,
PVC insulation, lengths: 250 mm
Snap-in clips for easy installation
for luminaire sheets (type LCH-002 and -008)
for ceilings (type LCH-004 and -009)
Degree of protection: IP40
Unit: 90 pcs. type LCH-002, LCH-008
Unit: 40 pcs. type LCH-004, LCH-009

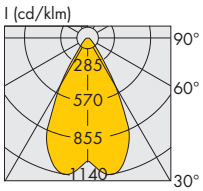

Operating Service Life
at ambient temperature t_a = 25 °C

Current mA	Operating service life (lumen maintenance at 70%)
350	50,000 hrs XP-E/40,000 hrs XML
500	50,000 hrs
700	40,000 hrs

Typical applications
Integration in luminaires
Architectural lighting
Marking paths, stairs, etc.
Furniture lighting
Light advertising
Entertainment, shop design

A

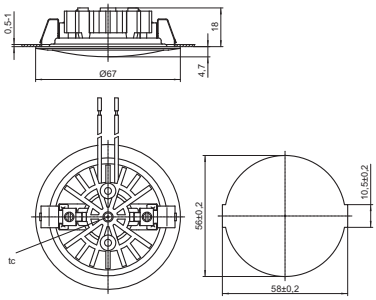

B

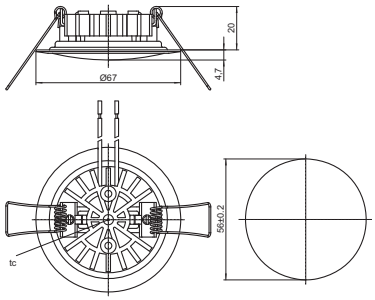

C

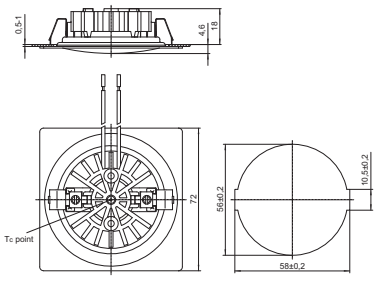

D

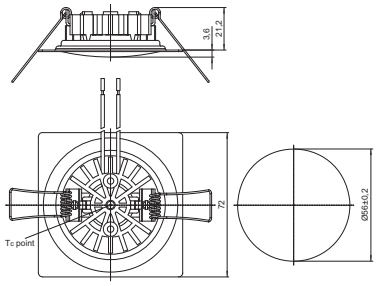

LEDSpot XP/XML with Heat Sink – Round Frame

	Type	Description	Ref. No.	Colour	Correlated colour temperature K	Luminous flux* (lm) at 350 mA min.	350 mA typ.	500 mA min.	500 mA typ.	700 mA min.	700 mA typ.	Frame colour	Drawing
	LEDSpot XP at junction temperature t_j=25 °C					**P_{el} = 1.12 W**		**P_{el} = 1.65 W**		**P_{el} = 2.38 W**			
new	LCH-002	XPE 3000K min Q3	**548898**	warm white	2870...3200	79.8	88.0	103.7	114.4	135.7	149.6	silver	A
new	LCH-002	XPE 3000K min Q3	**548899**	warm white	2870...3200	79.8	88.0	103.7	114.4	135.7	149.6	silver mat	A
new	LCH-002	XPE 3000K min Q3	**548900**	warm white	2870...3200	79.8	88.0	103.7	114.4	135.7	149.6	gold	A
new	LCH-002	XPE 3000K min Q3	**548901**	warm white	2870...3200	79.8	88.0	103.7	114.4	135.7	149.6	white	A
new	LCH-004	XPE 3000K min Q3	**548886**	warm white	2870...3200	79.8	88.0	103.7	114.4	135.7	149.6	silver	B
new	LCH-004	XPE 3000K min Q3	**548887**	warm white	2870...3200	79.8	88.0	103.7	114.4	135.7	149.6	silver mat	B
new	LCH-004	XPE 3000K min Q3	**548888**	warm white	2870...3200	79.8	88.0	103.7	114.4	135.7	149.6	gold	B
new	LCH-004	XPE 3000K min Q3	**548889**	warm white	2870...3200	79.8	88.0	103.7	114.4	135.7	149.6	white	B
new	LCH-002	XPE 4500K min Q4	**548902**	neutral white	4250...4750	85.0	93.9	110.5	122.1	144.5	159.6	silver	A
new	LCH-002	XPE 4500K min Q4	**548903**	neutral white	4250...4750	85.0	93.9	110.5	122.1	144.5	159.6	silver mat	A
new	LCH-002	XPE 4500K min Q4	**548904**	neutral white	4250...4750	85.0	93.9	110.5	122.1	144.5	159.6	gold	A
new	LCH-002	XPE 4500K min Q4	**548905**	neutral white	4250...4750	85.0	93.9	110.5	122.1	144.5	159.6	white	A
new	LCH-004	XPE 4500K min Q4	**547838**	neutral white	4250...4750	85.0	93.9	110.5	122.1	144.5	159.6	silver	B
new	LCH-004	XPE 4500K min Q4	**548891**	neutral white	4250...4750	85.0	93.9	110.5	122.1	144.5	159.6	silver mat	B
new	LCH-004	XPE 4500K min Q4	**548892**	neutral white	4250...4750	85.0	93.9	110.5	122.1	144.5	159.6	gold	B
new	LCH-004	XPE 4500K min Q4	**548893**	neutral white	4250...4750	85.0	93.9	110.5	122.1	144.5	159.6	white	B
new	LCH-002	XPE 6300K min R2	**548906**	cool white	5650...6950	96.9	107.1	126.0	139.2	164.7	182.1	silver	A
new	LCH-002	XPE 6300K min R2	**548907**	cool white	5650...6950	96.9	107.1	126.0	139.2	164.7	182.1	silver mat	A
new	LCH-002	XPE 6300K min R2	**548908**	cool white	5650...6950	96.9	107.1	126.0	139.2	164.7	182.1	gold	A
new	LCH-002	XPE 6300K min R2	**548909**	cool white	5650...6950	96.9	107.1	126.0	139.2	164.7	182.1	white	A
new	LCH-004	XPE 6300K min R2	**548894**	cool white	5650...6950	96.9	107.1	126.0	139.2	164.7	182.1	silver	B
new	LCH-004	XPE 6300K min R2	**548895**	cool white	5650...6950	96.9	107.1	126.0	139.2	164.7	182.1	silver mat	B
new	LCH-004	XPE 6300K min R2	**548896**	cool white	5650...6950	96.9	107.1	126.0	139.2	164.7	182.1	gold	B
new	LCH-004	XPE 6300K min R2	**548897**	cool white	5650...6950	96.9	107.1	126.0	139.2	164.7	182.1	white	B
	LEDSpot XML at junction temperature t_j=85 °C					**P_{el} = 4 W**		–		–			
new	LCH-002	XML 3000K min T6	**548912**	warm white	2950...3125	238.0	255.0	not allowed		not allowed		silver	A
new	LCH-002	XML 3000K min T6	**548913**	warm white	2950...3125	238.0	255.0	not allowed		not allowed		silver mat	A
new	LCH-002	XML 3000K min T6	**548914**	warm white	2950...3125	238.0	255.0	not allowed		not allowed		gold	A
new	LCH-002	XML 3000K min T6	**548915**	warm white	2950...3125	238.0	255.0	not allowed		not allowed		white	A
new	LCH-004	XML 3000K min T6	**548920**	warm white	2950...3125	238.0	255.0	not allowed		not allowed		silver	B
new	LCH-004	XML 3000K min T6	**548921**	warm white	2950...3125	238.0	255.0	not allowed		not allowed		silver mat	B
new	LCH-004	XML 3000K min T6	**548922**	warm white	2950...3125	238.0	255.0	not allowed		not allowed		gold	B
new	LCH-004	XML 3000K min T6	**548923**	warm white	2950...3125	238.0	255.0	not allowed		not allowed		white	B
new	LCH-002	XML 4000K min U2	**548916**	neutral white	3835...4110	255.0	272.0	not allowed		not allowed		silver	A
new	LCH-002	XML 4000K min U2	**548917**	neutral white	3835...4110	255.0	272.0	not allowed		not allowed		silver mat	A
new	LCH-002	XML 4000K min U2	**548918**	neutral white	3835...4110	255.0	272.0	not allowed		not allowed		gold	A
new	LCH-002	XML 4000K min U2	**548919**	neutral white	3835...4110	255.0	272.0	not allowed		not allowed		white	A
new	LCH-004	XML 4000K min U2	**548924**	neutral white	3835...4110	255.0	272.0	not allowed		not allowed		silver	B
new	LCH-004	XML 4000K min U2	**548925**	neutral white	3835...4110	255.0	272.0	not allowed		not allowed		silver mat	B
new	LCH-004	XML 4000K min U2	**548926**	neutral white	3835...4110	255.0	272.0	not allowed		not allowed		gold	B
new	LCH-004	XML 4000K min U2	**548927**	neutral white	3835...4110	255.0	272.0	not allowed		not allowed		white	B

* Measurement tolerance of luminous flux: ± 7% | Emission data at t_j = 25 °C

LEDSpot XP/XML with Heat Sink – Square Frame

	Type	Description	Ref. No.	Colour	Correlated colour temperature K	Luminous flux* (lm) at 350 mA min.	350 mA typ.	500 mA min.	500 mA typ.	700 mA min.	700 mA typ.	Frame colour	Drawing
	LEDSpot XP at junction temperature t_j=25 °C					**P_{el} = 1.12 W**		**P_{el} = 1.65 W**		**P_{el} = 2.38 W**			
new	LCH-008	XPE 3000K min Q3	**548363**	warm white	2870...3200	79.8	88.0	103.7	114.4	135.7	149.6	silver	C
new	LCH-008	XPE 3000K min Q3	**548364**	warm white	2870...3200	79.8	88.0	103.7	114.4	135.7	149.6	silver mat	C
new	LCH-008	XPE 3000K min Q3	**548368**	warm white	2870...3200	79.8	88.0	103.7	114.4	135.7	149.6	gold	C
new	LCH-008	XPE 3000K min Q3	**548366**	warm white	2870...3200	79.8	88.0	103.7	114.4	135.7	149.6	white	C
new	LCH-009	XPE 3000K min Q3	**548418**	warm white	2870...3200	79.8	88.0	103.7	114.4	135.7	149.6	silver	D
new	LCH-009	XPE 3000K min Q3	**548419**	warm white	2870...3200	79.8	88.0	103.7	114.4	135.7	149.6	silver mat	D
new	LCH-009	XPE 3000K min Q3	**548428**	warm white	2870...3200	79.8	88.0	103.7	114.4	135.7	149.6	gold	D
new	LCH-009	XPE 3000K min Q3	**548424**	warm white	2870...3200	79.8	88.0	103.7	114.4	135.7	149.6	white	D
new	LCH-008	XPE 4500K min Q4	**548369**	neutral white	4250...4750	85.0	93.9	110.5	122.1	144.5	159.6	silver	C
new	LCH-008	XPE 4500K min Q4	**548370**	neutral white	4250...4750	85.0	93.9	110.5	122.1	144.5	159.6	silver mat	C
new	LCH-008	XPE 4500K min Q4	**548374**	neutral white	4250...4750	85.0	93.9	110.5	122.1	144.5	159.6	gold	C
new	LCH-008	XPE 4500K min Q4	**548372**	neutral white	4250...4750	85.0	93.9	110.5	122.1	144.5	159.6	white	C
new	LCH-009	XPE 4500K min Q4	**548429**	neutral white	4250...4750	85.0	93.9	110.5	122.1	144.5	159.6	silver	D
new	LCH-009	XPE 4500K min Q4	**548430**	neutral white	4250...4750	85.0	93.9	110.5	122.1	144.5	159.6	silver mat	D
new	LCH-009	XPE 4500K min Q4	**548434**	neutral white	4250...4750	85.0	93.9	110.5	122.1	144.5	159.6	gold	D
new	LCH-009	XPE 4500K min Q4	**548432**	neutral white	4250...4750	85.0	93.9	110.5	122.1	144.5	159.6	white	D
new	LCH-008	XPE 6300K min R2	**548375**	cool white	5650...6950	96.9	107.1	126.0	139.2	164.7	182.1	silver	C
new	LCH-008	XPE 6300K min R2	**548376**	cool white	5650...6950	96.9	107.1	126.0	139.2	164.7	182.1	silver mat	C
new	LCH-008	XPE 6300K min R2	**548380**	cool white	5650...6950	96.9	107.1	126.0	139.2	164.7	182.1	gold	C
new	LCH-008	XPE 6300K min R2	**548378**	cool white	5650...6950	96.9	107.1	126.0	139.2	164.7	182.1	white	C
new	LCH-009	XPE 6300K min R2	**548435**	cool white	5650...6950	96.9	107.1	126.0	139.2	164.7	182.1	silver	D
new	LCH-009	XPE 6300K min R2	**548436**	cool white	5650...6950	96.9	107.1	126.0	139.2	164.7	182.1	silver mat	D
new	LCH-009	XPE 6300K min R2	**548440**	cool white	5650...6950	96.9	107.1	126.0	139.2	164.7	182.1	gold	D
new	LCH-009	XPE 6300K min R2	**548438**	cool white	5650...6950	96.9	107.1	126.0	139.2	164.7	182.1	white	D
	LEDSpot XML at junction temperature t_j=85 °C					**P_{el} = 4 W**		–		–			
new	LCH-008	XML 3000K min T6	**549828**	warm white	2950...3125	238.0	255.0	not allowed		not allowed		silver	C
new	LCH-008	XML 3000K min T6	**548929**	warm white	2950...3125	238.0	255.0	not allowed		not allowed		silver mat	C
new	LCH-008	XML 3000K min T6	**548930**	warm white	2950...3125	238.0	255.0	not allowed		not allowed		gold	C
new	LCH-008	XML 3000K min T6	**548931**	warm white	2950...3125	238.0	255.0	not allowed		not allowed		white	C
new	LCH-009	XML 3000K min T6	**548936**	warm white	2950...3125	238.0	255.0	not allowed		not allowed		silver	D
new	LCH-009	XML 3000K min T6	**548937**	warm white	2950...3125	238.0	255.0	not allowed		not allowed		silver mat	D
new	LCH-009	XML 3000K min T6	**548938**	warm white	2950...3125	238.0	255.0	not allowed		not allowed		gold	D
new	LCH-009	XML 3000K min T6	**548939**	warm white	2950...3125	238.0	255.0	not allowed		not allowed		white	D
new	LCH-008	XML 4000K min U2	**548932**	neutral white	3835...4110	255.0	272.0	not allowed		not allowed		silver	C
new	LCH-008	XML 4000K min U2	**548933**	neutral white	3835...4110	255.0	272.0	not allowed		not allowed		silver mat	C
new	LCH-008	XML 4000K min U2	**548934**	neutral white	3835...4110	255.0	272.0	not allowed		not allowed		gold	C
new	LCH-008	XML 4000K min U2	**548935**	neutral white	3835...4110	255.0	272.0	not allowed		not allowed		white	C
new	LCH-009	XML 4000K min U2	**548940**	neutral white	3835...4110	255.0	272.0	not allowed		not allowed		silver	D
new	LCH-009	XML 4000K min U2	**548941**	neutral white	3835...4110	255.0	272.0	not allowed		not allowed		silver mat	D
new	LCH-009	XML 4000K min U2	**548942**	neutral white	3835...4110	255.0	272.0	not allowed		not allowed		gold	D
new	LCH-009	XML 4000K min U2	**548943**	neutral white	3835...4110	255.0	272.0	not allowed		not allowed		white	D

* Measurement tolerance of luminous flux: ± 7% | Emission data at t_j = 25 °C

new

LEDSpot Reflector XP with Heat Sink



For cut-out: Ø 56 mm
LEDSpot with one LED and with heat sink for optimum thermal management
Reflector with glass diffuser
Metal frame, round: steel
Leads: Cu tinned, stranded conductors AWG22, PVC insulation, lengths: 250 mm
Snap-in clips for easy installation
for luminaire sheets (type LCH-006)
for ceilings (type LCH-007)
Degree of protection: IP40
Unit: 90 pcs. type LCH-006
Unit: 40 pcs. type LCH-007

A

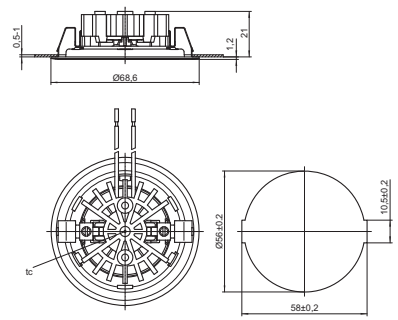

B

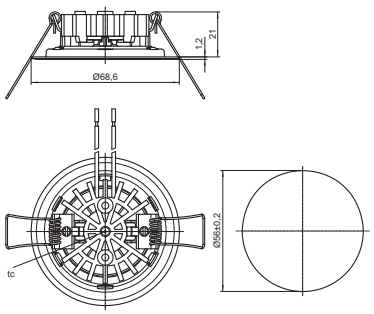

Operating service life

at ambient temperature t_a = 25 °C

Current mA	Operating service life (lumen maintenance at 70%)
350	50,000 hrs
500	50,000 hrs
700	40,000 hrs

Typical applications

Integration in luminaires
Architectural lighting
Marking paths, stairs, etc.
Furniture lighting
Light advertising
Entertainment, shop design

LEDSpot Reflector XP with Heat Sink

	Type	Description	Ref. No.	Colour	Correlated colour temperature K	Luminous flux* (lm) at 350 mA P_{el} = 1.12 W min.	typ.	500 mA P_{el} = 1.65 W min.	typ.	700 mA P_{el} = 2.38 W min.	typ.	Radiation angle °	Frame colour	Drawing
LEDSpot Reflector XP at junction temperature t_j=25 °C – radiation angle 20°														
new	LCH-006	XPE 3000K min Q3	**548769**	warm white	2870...3200	79.8	88.0	103.7	114.4	135.7	149.6	20	silver	A
new	LCH-006	XPE 3000K min Q3	**548770**	warm white	2870...3200	79.8	88.0	103.7	114.4	135.7	149.6	20	silver mat	A
new	LCH-006	XPE 3000K min Q3	**548774**	warm white	2870...3200	79.8	88.0	103.7	114.4	135.7	149.6	20	gold	A
new	LCH-006	XPE 3000K min Q3	**548772**	warm white	2870...3200	79.8	88.0	103.7	114.4	135.7	149.6	20	white	A
new	LCH-007	XPE 3000K min Q3	**548794**	warm white	2870...3200	79.8	88.0	103.7	114.4	135.7	149.6	20	silver	B
new	LCH-007	XPE 3000K min Q3	**548795**	warm white	2870...3200	79.8	88.0	103.7	114.4	135.7	149.6	20	silver mat	B
new	LCH-007	XPE 3000K min Q3	**548799**	warm white	2870...3200	79.8	88.0	103.7	114.4	135.7	149.6	20	gold	B
new	LCH-007	XPE 3000K min Q3	**548797**	warm white	2870...3200	79.8	88.0	103.7	114.4	135.7	149.6	20	white	B
new	LCH-006	XPE 4500K min Q4	**548944**	neutral white	4250...4750	85.0	93.9	110.5	122.1	144.5	159.6	20	silver	A
new	LCH-006	XPE 4500K min Q4	**548945**	neutral white	4250...4750	85.0	93.9	110.5	122.1	144.5	159.6	20	silver mat	A
new	LCH-006	XPE 4500K min Q4	**548946**	neutral white	4250...4750	85.0	93.9	110.5	122.1	144.5	159.6	20	gold	A
new	LCH-006	XPE 4500K min Q4	**548947**	neutral white	4250...4750	85.0	93.9	110.5	122.1	144.5	159.6	20	white	A
new	LCH-007	XPE 4500K min Q4	**548952**	neutral white	4250...4750	85.0	93.9	110.5	122.1	144.5	159.6	20	silver	B
new	LCH-007	XPE 4500K min Q4	**548953**	neutral white	4250...4750	85.0	93.9	110.5	122.1	144.5	159.6	20	silver mat	B
new	LCH-007	XPE 4500K min Q4	**548954**	neutral white	4250...4750	85.0	93.9	110.5	122.1	144.5	159.6	20	gold	B
new	LCH-007	XPE 4500K min Q4	**548955**	neutral white	4250...4750	85.0	93.9	110.5	122.1	144.5	159.6	20	white	B
new	LCH-006	XPE 6300K min R2	**548775**	cool white	5450...6950	96.9	107.1	126.0	139.2	164.7	182.1	20	silver	A
new	LCH-006	XPE 6300K min R2	**548776**	cool white	5450...6950	96.9	107.1	126.0	139.2	164.7	182.1	20	silver mat	A
new	LCH-006	XPE 6300K min R2	**548780**	cool white	5450...6950	96.9	107.1	126.0	139.2	164.7	182.1	20	gold	A
new	LCH-006	XPE 6300K min R2	**548778**	cool white	5450...6950	96.9	107.1	126.0	139.2	164.7	182.1	20	white	A
new	LCH-007	XPE 6300K min R2	**548800**	cool white	5450...6950	96.9	107.1	126.0	139.2	164.7	182.1	20	silver	B
new	LCH-007	XPE 6300K min R2	**548801**	cool white	5450...6950	96.9	107.1	126.0	139.2	164.7	182.1	20	silver mat	B
new	LCH-007	XPE 6300K min R2	**548805**	cool white	5450...6950	96.9	107.1	126.0	139.2	164.7	182.1	20	gold	B
new	LCH-007	XPE 6300K min R2	**548803**	cool white	5450...6950	96.9	107.1	126.0	139.2	164.7	182.1	20	white	B
LEDSpot Reflector XP at junction temperature t_j=25 °C – radiation angle 50°														
new	LCH-006	XPE 3000K min Q3	**548782**	warm white	2870...3200	79.8	88.0	103.7	114.4	135.7	149.6	50	silver	A
new	LCH-006	XPE 3000K min Q3	**548783**	warm white	2870...3200	79.8	88.0	103.7	114.4	135.7	149.6	50	silver mat	A
new	LCH-006	XPE 3000K min Q3	**548787**	warm white	2870...3200	79.8	88.0	103.7	114.4	135.7	149.6	50	gold	A
new	LCH-006	XPE 3000K min Q3	**548785**	warm white	2870...3200	79.8	88.0	103.7	114.4	135.7	149.6	50	white	A
new	LCH-007	XPE 3000K min Q3	**548806**	warm white	2870...3200	79.8	88.0	103.7	114.4	135.7	149.6	50	silver	B
new	LCH-007	XPE 3000K min Q3	**548807**	warm white	2870...3200	79.8	88.0	103.7	114.4	135.7	149.6	50	silver mat	B
new	LCH-007	XPE 3000K min Q3	**548811**	warm white	2870...3200	79.8	88.0	103.7	114.4	135.7	149.6	50	gold	B
new	LCH-007	XPE 3000K min Q3	**548809**	warm white	2870...3200	79.8	88.0	103.7	114.4	135.7	149.6	50	white	B
new	LCH-006	XPE 4500K min Q4	**548948**	neutral white	4250...4750	85.0	93.9	110.5	122.1	144.5	159.6	50	silver	A
new	LCH-006	XPE 4500K min Q4	**548949**	neutral white	4250...4750	85.0	93.9	110.5	122.1	144.5	159.6	50	silver mat	A
new	LCH-006	XPE 4500K min Q4	**548950**	neutral white	4250...4750	85.0	93.9	110.5	122.1	144.5	159.6	50	gold	A
new	LCH-006	XPE 4500K min Q4	**548951**	neutral white	4250...4750	85.0	93.9	110.5	122.1	144.5	159.6	50	white	A
new	LCH-007	XPE 4500K min Q4	**548956**	neutral white	4250...4750	85.0	93.9	110.5	122.1	144.5	159.6	50	silver	B
new	LCH-007	XPE 4500K min Q4	**548957**	neutral white	4250...4750	85.0	93.9	110.5	122.1	144.5	159.6	50	silver mat	B
new	LCH-007	XPE 4500K min Q4	**548958**	neutral white	4250...4750	85.0	93.9	110.5	122.1	144.5	159.6	50	gold	B
new	LCH-007	XPE 4500K min Q4	**548959**	neutral white	4250...4750	85.0	93.9	110.5	122.1	144.5	159.6	50	white	B
new	LCH-006	XPE 6300K min R2	**548788**	cool white	5450...6950	96.9	107.1	126.0	139.2	164.7	182.1	50	silver	A
new	LCH-006	XPE 6300K min R2	**548789**	cool white	5450...6950	96.9	107.1	126.0	139.2	164.7	182.1	50	silver mat	A
new	LCH-006	XPE 6300K min R2	**548793**	cool white	5450...6950	96.9	107.1	126.0	139.2	164.7	182.1	50	gold	A
new	LCH-006	XPE 6300K min R2	**548791**	cool white	5450...6950	96.9	107.1	126.0	139.2	164.7	182.1	50	white	A
new	LCH-007	XPE 6300K min R2	**548812**	cool white	5450...6950	96.9	107.1	126.0	139.2	164.7	182.1	50	silver	B
new	LCH-007	XPE 6300K min R2	**548813**	cool white	5450...6950	96.9	107.1	126.0	139.2	164.7	182.1	50	silver mat	B
new	LCH-007	XPE 6300K min R2	**548817**	cool white	5450...6950	96.9	107.1	126.0	139.2	164.7	182.1	50	gold	B
new	LCH-007	XPE 6300K min R2	**548815**	cool white	5450...6950	96.9	107.1	126.0	139.2	164.7	182.1	50	white	B

* Measurement tolerance of luminous flux: ± 7% | Emission data at t_j = 25 °C

new

LEDSpot EffectLine XP/XML with Heat Sink



For cut-out: Ø 37 mm
LEDSpot with one LED and with heat sink
for optimum thermal management
Metal frame, round or square: steel, silver
Leads: Cu tinned, stranded conductors AWG22,
PVC insulation, lengths: 250 mm
Snap-in clips for easy installation
for ceilings
Unit: 45 pcs.

Operating service life

at ambient temperature t_a = 25 °C

Current mA	Operating service life (lumen maintenance at 70%)
350	50,000 hrs XP-E/40,000 hrs XML
500	50,000 hrs
700	40,000 hrs

Typical applications

Integration in luminaires
Architectural lighting
Marking paths, stairs, etc.
Furniture lighting
Light advertising
Entertainment, shop design

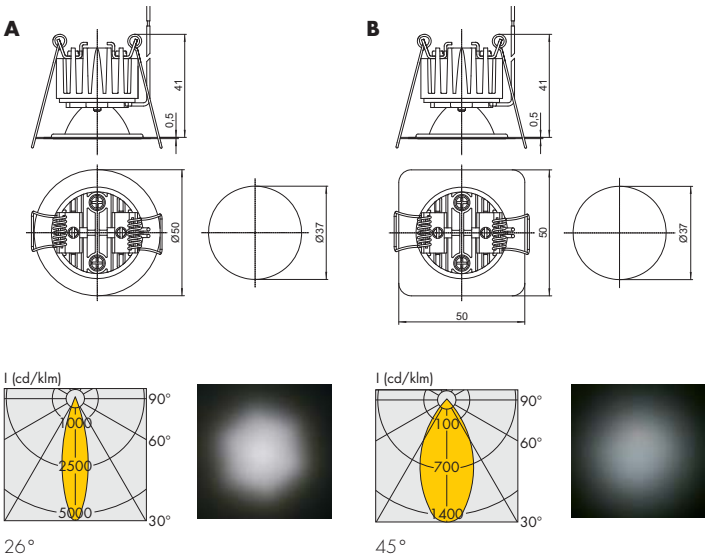

	Type	Description	Ref. No.	Colour	Correlated colour temperature K	Luminous flux* (lm) at 350 mA min.	350 mA typ.	500 mA min.	500 mA typ.	700 mA min.	700 mA typ.	Radiation angle °	Drawing
	LEDSpot EffectLine XP at junction temperature t_j=25 °C					**P_{el} = 1.12 W**		**P_{el} = 1.65 W**		**P_{el} = 2.38 W**			
new	LCH010	XPE 3000K min Q3	**548964**	warm white	2870...3200	84.5	93.2	109.9	121.1	163.7	158.4	26	A
new	LCH010	XPE 3000K min Q3	**548960**	warm white	2870...3200	84.5	93.2	109.9	121.1	163.7	158.4	45	A
new	LCH010	XPE 4500K min Q4	**548965**	neutral white	4250...4750	90.0	99.4	117.0	129.3	153.0	169.0	26	A
new	LCH010	XPE 4500K min Q4	**548961**	neutral white	4250...4750	90.0	99.4	117.0	129.3	153.0	169.0	45	A
new	LCH011	XPE 3000K min Q3	**548966**	warm white	2870...3200	84.5	93.2	109.9	121.1	163.7	158.4	26	B
new	LCH011	XPE 3000K min Q3	**548962**	warm white	2870...3200	84.5	93.2	109.9	121.1	163.7	158.4	45	B
new	LCH011	XPE 4500K min Q4	**548967**	neutral white	4250...4750	90.0	99.4	117.0	129.3	153.0	169.0	26	B
new	LCH011	XPE 4500K min Q4	**548963**	neutral white	4250...4750	90.0	99.4	117.0	129.3	153.0	169.0	45	B
	LEDSpot EffectLine XML at junction temperature t_j=85 °C					**P_{el} = 4 W**		–		–			
new	LCH010	XML 3000K min T6	**548974**	warm white	2950...3125	252.0	270.0	not allowed		not allowed		26	A
new	LCH010	XML 3000K min T6	**548970**	warm white	2950...3125	252.0	270.0	not allowed		not allowed		45	A
new	LCH010	XML 4000K min U2	**548975**	neutral white	3835...4110	270.0	288.0	not allowed		not allowed		26	A
new	LCH010	XML 4000K min U2	**548971**	neutral white	3835...4110	270.0	288.0	not allowed		not allowed		45	A
new	LCH011	XML 3000K min T6	**548976**	warm white	2950...3125	252.0	270.0	not allowed		not allowed		26	B
new	LCH011	XML 3000K min T6	**548972**	warm white	2950...3125	252.0	270.0	not allowed		not allowed		45	B
new	LCH011	XML 4000K min U2	**548977**	neutral white	3835...4110	270.0	288.0	not allowed		not allowed		26	B
new	LCH011	XML 4000K min U2	**548973**	neutral white	3835...4110	270.0	288.0	not allowed		not allowed		45	B

* Measurement tolerance of luminous flux: ± 7% | Emission data at t_j = 25 °C

24 V CA MODULES, COLOUR CONTROL AND CONNECTION TECHNOLOGY





With its high-power 24 V system, Vossloh-Schwabe is responding to the trend towards market harmonisation and simplification of LED control technology.

The modules are operated at 24 V DC and constant-current control of 350 mA min. is effected on the circuit board. The module is connected using on-board push-in terminals and matching connecting cables. This enables modular and highly flexible LED systems.

The RGB system is based on the "common anode" principle.
The DigiLED CA series permits the operation of high-power RGB modules and low-power modules of "common anode" design.

Typical applications

- General lighting
- Architectural lighting
- Lighting of complex structures
- Entertainment
- Shop design

The specifications contained in this catalogue can change due to technical innovations. Any such changes will be made without separate notification.

Please read the safety and installation instructions on the individual products as well as further technical information provided in the extensive product descriptions at **www.vossloh-schwabe.com.**

High Power 24 V CA Modules Mono and RGB



Built-in PCB lighting modules
The High Power 24 V CA modules are available in white and warm white or RGB with a very high luminous flux.

The round design with 3 or 10 High Power LEDs is particularly suitable for installation in luminaires and spots. The linear design with 6 LEDs is, for instance, suitable for wall-washing and linear luminaires, etc.

To enable easy understanding of the system, the modules are operated at 24 V DC. Constant-current control of the LEDs is on the circuit board. Contacts are made using an on-board push terminal with matching connection cables.

Additional suitable dimming modules (DigiLED CA series) and optics attachments (s. pages 42 and 43) are available to create individual lighting solutions.

Technical notes
Triple WU-M-440: Ø 66 mm, 3 LEDs
Line WU-M-441: 300x26 mm, 6 LEDs
Flood WU-M-442: Ø 110 mm, 10 LEDs
Allowed operating temperature at t_c point:
–10 to 85 °C
Aluminium PCB
For improved thermal management VS recommends an additional cooling element, which is suitable for the application.
Colour rendering index: > 80
Increased ESD protection
Voltage supply: 24 V DC
Minimum order quantity: 50 pcs.

Typical applications
General lighting
Architectural lighting
Entertainment, shop design
Decorative lighting
Light advertising

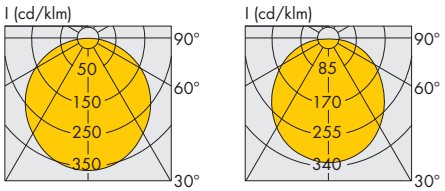

Mono RGB

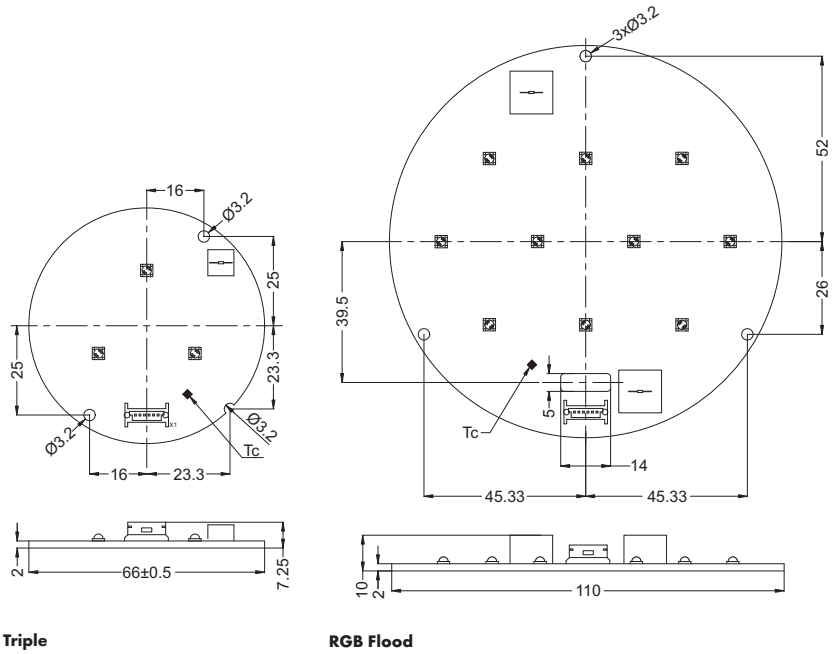

Triple **RGB Flood**

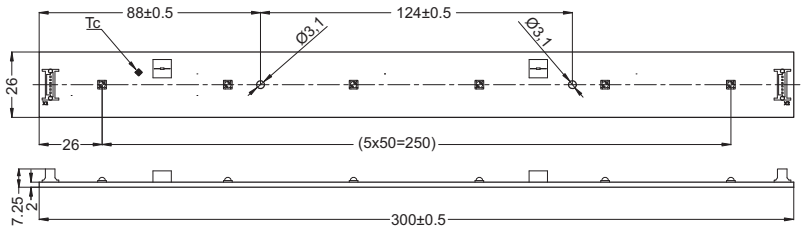

Line

High Power 24 V CA Modules – Mono

Type	Ref. No.	Colour	Number of LEDs	Inrush current* A	Nominal current* A	Colour temperature* K	Typ. luminous flux* (lm) min.	typ.	Radiation angle* (°)	Max. power* W
Mono Triple										
WU-M-440-WW	**548520**	warm white	3	0.86	0.42	3000 -130/+220	565	610	115	10
WU-M-440-NW	**548519**	neutral white	3	0.86	0.42	4000 -300/+260	565	610	115	10
Mono Line										
WU-M-441-WW	**548523**	warm white	6	1.66	0.83	3000 -130/+220	1130	1220	115	20
WU-M-441-NW	**548522**	neutral white	6	1.66	0.83	4000 -300/+260	1130	1220	115	20
Mono Flood										
WU-M-442-WW	**548526**	warm white	10	1.10	1.10	3000 -130/+220	1900	1550	115	20
WU-M-442-NW	**548525**	neutral white	10	1.10	1.10	4000 -300/+260	1900	1550	115	20

* Measurement tolerance of luminous flux: ± 7% | Emission data at t_j = 25 °C

High Power 24 V CA Modules – RGB

Type	Ref. No.	Colour	Number of LEDs	Inrush current* A	Nominal current* (A)	Dom. wavelength (mm) red	green	blue	Typ. luminous flux* (lm) red	green	blue	Radiation angle* (°)	Max. power* W
RGB Triple													
WU-M-440-RGB	**548518**	RGB	3	0.54	0.22	620 - 630	520 - 535	465 - 485	60	115	40	130	5
RGB Line													
WU-M-441-RGB	**548521**	RGB	6	1.10	0.65	620 - 630	520 - 535	465 - 485	180	315	115	130	15
RGB Flood													
WU-M-442-RGB	**548524**	RGB	10	1.40	1.10	620 - 630	520 - 535	465 - 485	215	500	135	130	25

* Measurement tolerance of luminous flux: ± 7% | Emission data at t_j = 25 °C

LEDLine Flex RGB2 CA Indoor



Built-in PCB lighting modules
The LEDLine Flex RGB2 CA is a "common anode" design variant. This permits the user to operate high-power RGB modules together with the new Flex RGB2 CA.

The LEDLine Flex RGB2 CA is fitted with SMD LEDs on a flexible printed circuit board of only approx. 0.15 mm thickness. Even the most complex structures can be illuminated thanks to the use of an extremely pliable foil. LEDLine Flex SMD can be separated into segments of 171 mm without loss of function.
This product is available in continuous lengths of 4.104 m. Installation is achieved via double-sided adhesive tape affixed to the rear of the PCB.

Technical notes
Dimensions of LEDLine Flex SMD

LxW mm	SMDs pcs.	Single steps	Length mm	SMDs pcs.
4104x10	240	24	171	10

Allowed operating temperature at t_c point:
-25 to 70 °C
Wide radiation angle (110°)
Voltage supply: 24 V DC
Power consumption per step (171 mm): 2.4 W
Each SMD contains 3 LED-Chips
in the colours red, green and blue

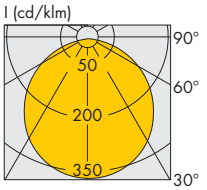

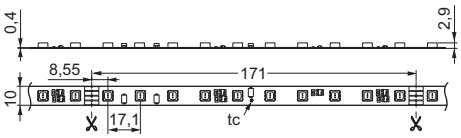

Typical applications
Architectural lighting
Lighting of complex structures
Entertainment, shop design
Marking paths, stairs, etc.
Furniture lighting
Light advertising

Type	**Ref. No.**	Colour	Current* A			Dom. wavelength* nm			Typ. luminous flux* lm			Radiation angle* °	Max. power* W		
			red	green	blue	red	green	blue	red	green	blue		red	green	blue
WU-M-266-RGB2-CA	**536052**	RGB	0.48	0.96	0.96	624	528	467	528	853	193	110	11.5	23	23

* The values mentioned above represent only statistical variables on account of the complex manufacturing process of light emitting diodes.
The values do not necessarily correspond exactly to the actual parameters of every single product, which can vary from the typical specifications.

LEDLine Flex RGB2 CA Outdoor



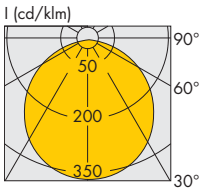

Built-in PCB lighting modules

The LEDLine Flex RGB2 CA Outdoor is an extremely flexible linear module for applications with high moisture or dust burden conditions. Due to the flexible and compact design, the illumination of complex structures and flat designs can be realised. The IP67 protected LEDLine Flex RGB2 CA Outdoor is available in 3 different lengths (see below). The installation is achieved via double-sided adhesive tape affixed to the rear of the PCB.

The colour blend of LEDLine Flex RGB2 CA Outdoor can be adjusted using DigiLED control modules. To increase the number of LED modules DigiLED-Slave can be used.

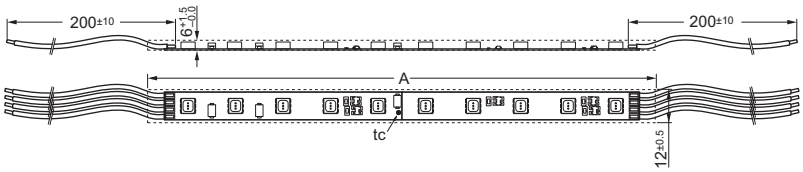

Technical notes

Dimensions of PCB: 171x10 mm,
855x10 mm, 1710x10 mm
Encapsulated dimensions (see drawing)
PCB 171 mm: A = $177^{\pm 5}$ mm
PCB 855 mm: A = $861^{\pm 5}$ mm
PCB 1710 mm: A = $1716^{\pm 5}$ mm
Degree of protection: IP67
Allowed operating temperature at t_c point:
-20 to 50 °C
Allowed handling temperature:
10 to 50 °C
Minimum bend radius: 50 mm,
flexible in longitudinal direction only
Pre-assembled with 4 wires on both ends
Voltage supply: 24 V DC

Typical applications

Lighting of complex structures
with high moisture or dust burden
Outdoor marking of paths, stairs, etc.
Outdoor light advertising
Outdoor entertainment, shop design
Architectural lighting
Outdoor border lighting

Type	Ref. No.	Colour	Number of SMDs	Current* A			Dom. wavelength* nm			Typ. luminous flux* (lm)			Radiation angle* °	Max. power* W		
WU-M-266-				red	green	blue	red	green	blue	red	green	blue		red	green	blue
RGB2-CA-Outdoor 171mm	**545420**	RGB	10	0.02	0.04	0.04	624	528	467	22	36	8	110	0.48	0.96	0.96
RGB2-CA-Outdoor 855mm	**545421**	RGB	50	0.10	0.20	0.20	624	528	467	110	180	40	110	2.40	4.80	4.80
RGB2-CA-Outdoor 1710mm	**545422**	RGB	100	0.20	0.40	0.40	624	528	467	220	360	80	110	4.80	9.60	9.60

* The values mentioned above represent only statistical variables on account of the complex manufacturing process of light emitting diodes.
The values do not necessarily correspond exactly to the actual parameters of every single product, which can vary from the typical specifications.

Colour Control Modules – DigiLED CA

The DigiLED CA series is based on a system design that combines simplicity, flexibility and reliability. The DigiLED CA series is suitable for operating both high-power RGB CA modules and low-power RGB CA modules.
In the simplest case, a keypad enables manual colour control. In addition to custom colour control, it is also possible to call up pre-set colour programs for example colour sequences.

The CA series of VS colour control modules are available with both a manual operating pad and a DALI interface or "PUSH" or DMX variant.

Furthermore the DigiLED Mono is available. The DigiLED Mono enables the dimming of single-colour (e. g. white) LED modules.

Technical notes
Dimensions: 93 x 58 x 29 mm
Ambient temperature t_a: –20 to 45 °C
Operating voltage: 24 V DC
Max. current on the supply line: 5 A
Connectors: push-in terminals: 0.25–1.5 mm², grid: 3.5 mm
All DigiLED not suitable for the US market

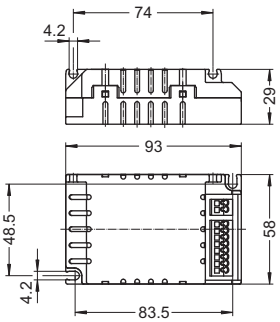



DigiLED Manual CA
Colour controls via key pads (6 keys)
Individual colour control or selection of pre-set programs
t_c = 55 °C max.
Max. current per control channel: 1.25 A
Type: WU-ST-001-Digi-manuell-CA
Ref. No.: 186136

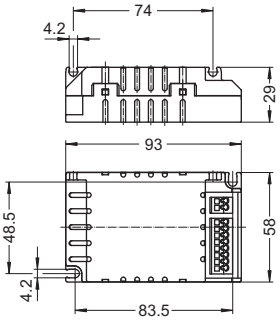



DigiLED DALI CA
Digital colour controls via DALI light management
t_c = 60 °C max.
Max. current per control channel: 1.25 A
Type: WU-ST-004-Digi-DALI-CA
Ref. No.: 186138

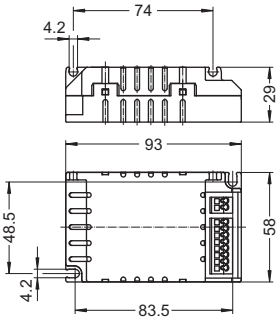

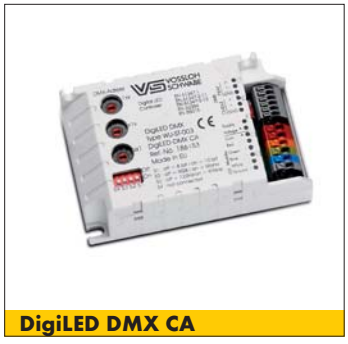

DigiLED DMX CA
Digital colour controls via DMX light management
t_c = 60 °C max.
Max. current per control channel: 1.25 A
Type: WU-ST-003-Digi-DMX-CA
Ref. No.: 186153

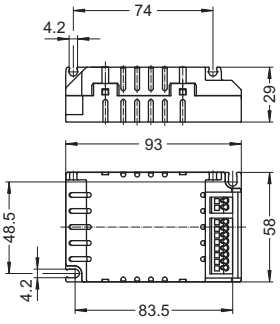



DigiLED IR CA
Colour adjustment by a portable remote control
Call up of pre-adjusted setting possible
Data transfer via infra-red
t_c = 55 °C max.
Max. current per control channel: 1.25 A
Type: WU-ST-005-Digi-IR-CA
Ref. No.: 186154

DigiLED RF CA
Easy operation possible via radio frequency (RF) and a keypad with 7 buttons. The operation via radio frequency (RF) enables a flexible installation. Optical "line of sight" or cables are not necessary due to RF operation.
Dimensions: 93 x 58 x 29 mm
Ambient temperature t_a: –20 to 45 °C
Operating voltage: 24 V DC
Max. current per control channel: 1.25 A
Type: WU-ST-012-DigiLED-RF CA
Ref. No.: 186181

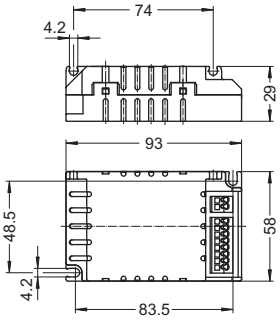


DigiLED RF CA

Walltransmitter
Required to activate the programs in the DigiLED RF
Dimensions: 86 x 86 x 15 mm
Colour: white
Type: WU-ST-009-Walltransmitter
Ref. No.: 536843

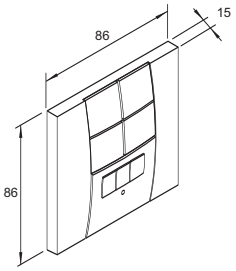


Walltransmitter

DigiLED Push CA
Colour adjustment by separate push button
Permits retrieval of pre-set programs
t_c = 55 °C max.
Max. current per control channel: 1.25 A
Type: WU-ST-006-DigiLED-Push CA
Ref. No.: 186144

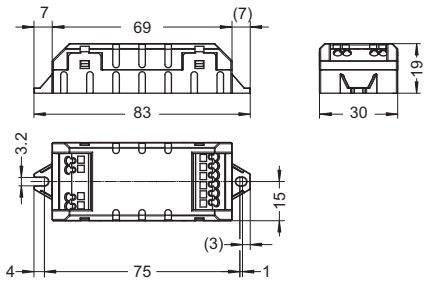


DigiLED Push CA

DigiLED Mono CA
For dimming of single-colour LED modules
Dimming via 1–10 V interface or external PWM signal
t_c = 55 °C max.
Max. current per control channel: 5 A
Type: WU-ST-010-DigiLED-Mono CA
Ref. No.: 186155

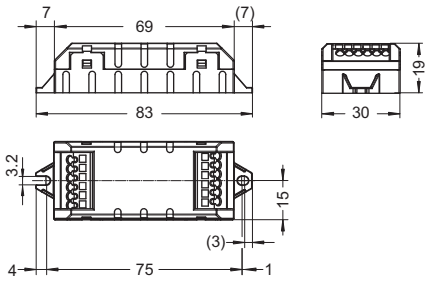


DigiLED Mono CA

DigiLED Slave CA
Increase of the system performance for 24 V CA LED built-in system
Signal amplification on channels RGB(W)
t_c = 65 °C max.
Max. current per control channel per slave: 1.25
Type: WU-ST-002-DigiLED-Slave CA
Ref. No.: 186142

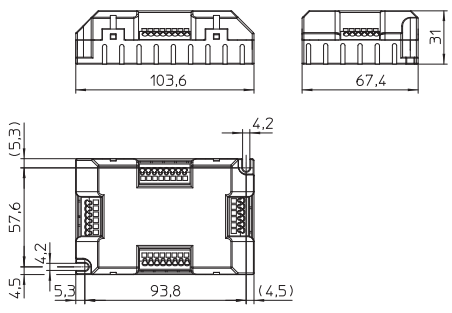


DigiLED Slave CA

Passive Slave CA
Increase of the system performance
for 24 V CA LED built-in system
No signal amplification on channels RGB(W)
t_c = 65 °C max.
Type: WU-ST-011-Passive-Slave CA
Ref. No.: 186172

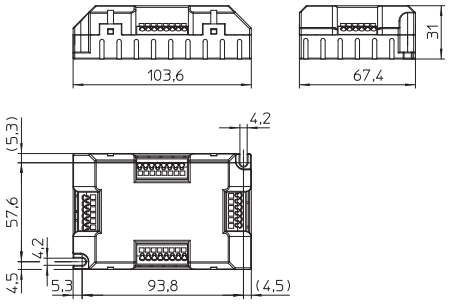



Passive Slave CA

Passive Slave PCB CA
PCB for increase of the system performance
for 24 V CA LED built-in system
Without casing
No signal amplification on channels RGB(W)
t_c = 65 °C max.
Type: WU-VB-004-Slave-PCB CA
Ref. No.: 186140

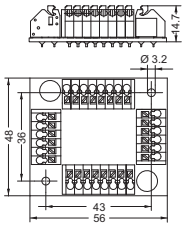



Passive Slave PCB CA

Table 1: Terminal connection

Pole	Colour coding	Function	Max. current-carrying capacity	Colour coding System flatband cable
1	red	supply line for LED built-in modules (+24 V)	5 A	blue
2	orange	PMW signal line for channel 1	1.25 A	grey
3	green	PMW signal line for channel 2	1.25 A	grey
4	blue	PMW signal line for channel 3	1.25 A	grey
5	light grey	PMW signal line for channel 4	1.25 A	grey
6	black	supply line for LED built-in modules (GND)	5 A	grey

LED Connection Technology for 24 V CA System

Various connection methods like flatband cables, feed in cables, PCB distributors and slaves can be used to effect electrical connections between LED assembly modules and DigiLED CA colour control units.

Flatband and feed-in cables are designed to ensure that LED built-in modules can be connected to a DigiLED CA colour control unit or a PCB distributor or slave board up to the maximum current-carrying capacity specified in Table 1 on page 68.

When setting up a 24 V CA system, it must be ensured that the minimum supply voltage stated in the data sheets of the LED built-in modules is attained through the combination of lead lengths.

Flatband system cables

For reverse-polarity protected connections between LED built-in modules and/or groups and for connection to PCB distributors. The six-strand flatband cable is fitted with pre-assembled connectors that plug directly in to the sockets of the LED built-in modules and PCB distributors.

Type: WU-VB-002-HP-20mm
Ref. No.: 539476 cable length: 20 mm
Type: WU-VB-002-HP-100mm
Ref. No.: 539475 cable length: 100 mm
Flatband extension cable
Type: WU-VB-008-HP-extension-400mm
Ref. No.: 543187 cable length: 400 mm

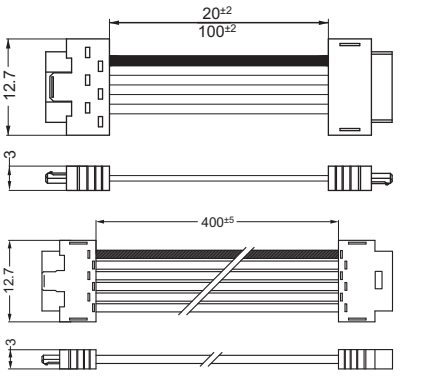



Feed-in cable

For connecting LED built-in modules and groups to a DigiLED CA colour control unit or slave board. The reverse-polarity protected connector attached to the feed in cable is plugged on the LED built-in module. The other side of the cable is then connected to the slave board or DigiLED CA colour control unit while ensuring correct polarity (colour coding)

Type: WU-VB-002-HP-Feed-in-500mm
Ref. No.: 535900 cable length: 500 mm

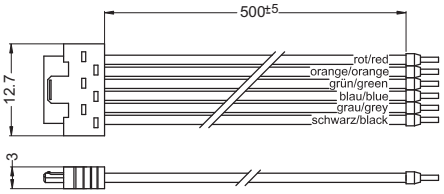



Feed-in cable Mono

For reverse polarity protected connection between monochromatic LED built-in modules and 24 V voltage supply. The dimming function is not supported.

Type: WU-VB-006-HP-Feed-in-500mm mono
Ref. No.: 542267 cable length: 500 mm

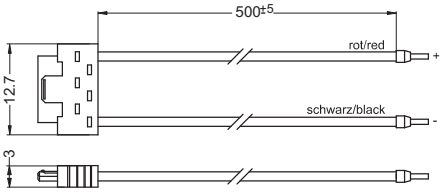



PCB distributor

For connecting up to four LED built-in modules or groups to a DigiLED CA colour control unit or slave board. The maximum current-carrying capacity per contact is 5 A on the input side (terminal) and as detailed in Table 1 (page 68) on the output side (connector). A standard six-strand conductor (e.g. LIYY 6X0.75 mm²) and up to four flatband cables can be used.

Type: WU-VB-003-DistriPCB CA
Ref. No.: 186141

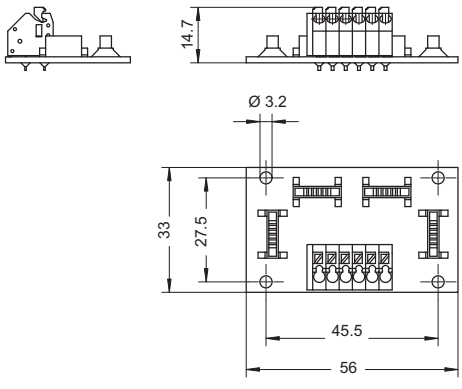

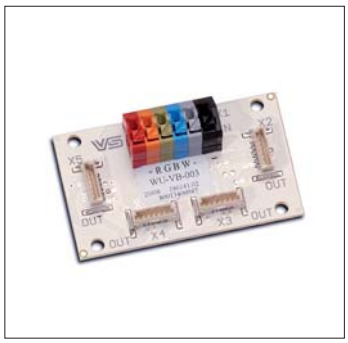

Wiring Layout High Power

The diagram shows the typical wiring layout of the High Power RGB CA system.

The DigiLED CA series colour control modules can be used to operate both VS high-power LED modules and VS low-power LED modules if these are CA design variants.

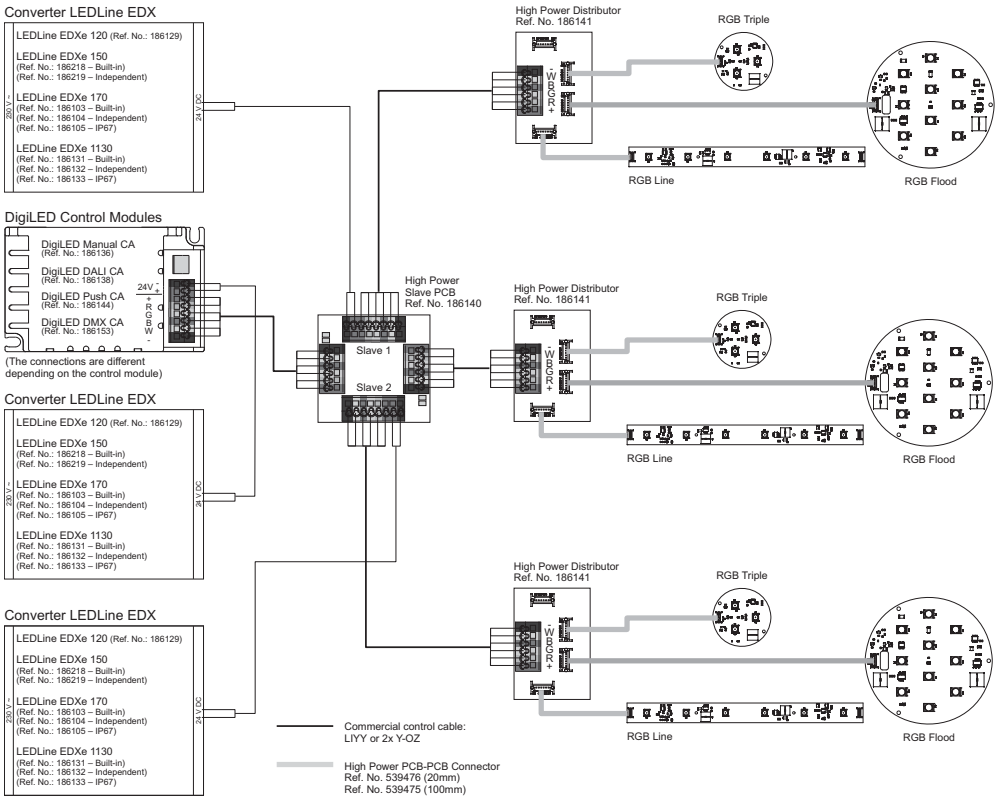

LED MODULES, COLOUR CONTROL, CONVERTER AND ACCESSORIES



With a standard 24 V system, the modules are operated with 24 V DC converters. LED currents are regulated down to 120 mA via constant-current sources on the modules.

The RGB system was designed in accordance with the "common cathode" principle and is addressed using the DigiLED series of control modules.

Typical applications

- Furniture lighting
- Architectural lighting
- Light advertising
- Entertainment
- Shop design
- Marking paths, stairs, etc.



LEDProfile IP67

Light modules for IP67-compliant outdoor lighting

Vossloh-Schwabe provides an IP67-compliant encapsulation for LED frames destined for outdoor lighting projects (e.g. architectural lighting).

On request, these frames can be fitted and encapsulated with flexible modules (WU-M-266 or WU-M-359). Depending on the respective LED module, the length of the frame can be extended by several times the by the length of the LED module (171 mm or 85.5 mm). The maximum frame length is 2 m.

The LED arrays can be supplied in white, warm white, monochrome or RGB.

Please contact your VS sales representative for further details.

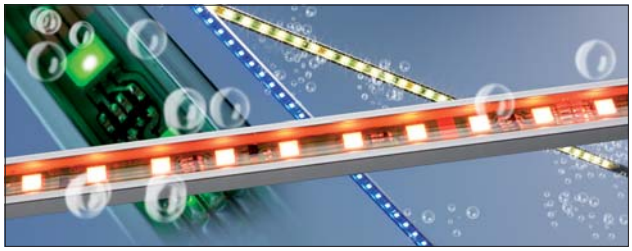

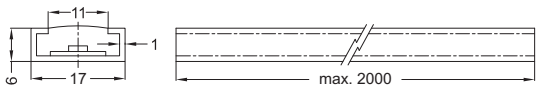

The specifications contained in this catalogue can change due to technical innovations. Any such changes will be made without separate notification.

Please read the safety and installation instructions on the individual products as well as further technical information provided in the extensive product descriptions at **www.vossloh-schwabe.com.**

new

LEDLine Flex SMD monochrom/RGB and High Brightness

Built-in PCB lighting modules

The LEDLine Flex SMD is fitted with SMD LEDs on a flexible printed circuit board of only approx. 0.15 mm thickness. Even the most complex structures can be illuminated thanks to the use of an extremely pliable foil. LEDLine Flex SMD can be separated into segments of different lengths (see table) without loss of function. This product is available in continuous lengths of up to nearly 10 m or 4.1 m for RGB and 5 m for High Brightness. Installation is achieved via double-sided adhesive tape affixed to the rear of the PCB.

The entire LEDLine Flex SMD RGB (power consumption of 4.1 m: 57.5 W) can be driven by a 70 W power supply. To increase the numberof LED modules DigiLED-Slave can be used.

Technical notes

Dimensions of LEDLine Flex SMD

Colour	LxW mm	SMDs pcs.	Single steps	Length mm	SMDs pcs.
white	9918x10	580	116	85.5	5
green	9918x10	580	116	85.5	5
blue	9918x10	580	116	85.5	5
red	9918x10	522	58	171	9
yellow	9918x10	522	58	171	9
RGB	4104x10	240	24	171	10
HB1	4959x10	174	29	171	6
HB2	4788x10	112	14	342	8

Allowed operating temperature at t_c point:
- -25 to 70 °C
- 0 to 85 °C (for High Brightness)

Wide radiation angle (120°),
- for RGB modules (110°)

Voltage supply: 24 V DC

Additional technical notes for RGB modules

Power consumption per step (171 mm): 2.4 W
Each SMD contains 3 LED-chips
- in the colours red, green and blue

Typical applications

Lighting of complex structures
Marking paths, stairs, etc.
Furniture lighting
Light advertising
Entertainment, shop design
Architectural lighting



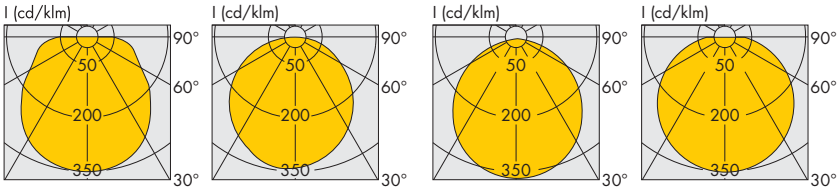

WU-M-266-W | WU-M-266-SO, -SY, -SB, -SG | WU-M-266-RGB | High Brightness

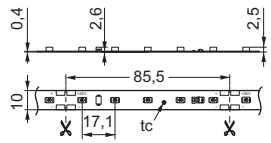

WU-M-266-SB, -SG

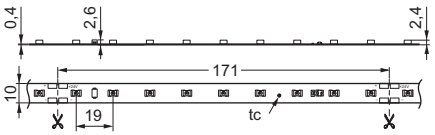

WU-M-266-SO, -SY

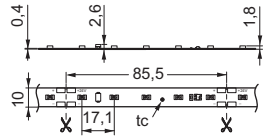

WU-M-266-W2, -W3, -WW, -WW2

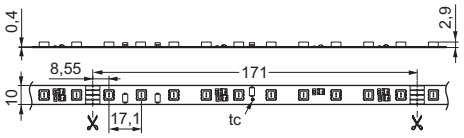

WU-M-266-RGB, -RGB2

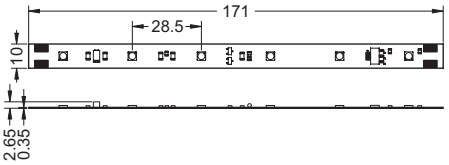

HB1: WU-M-359-W, -WW, -WW-H1, -SB, -SG

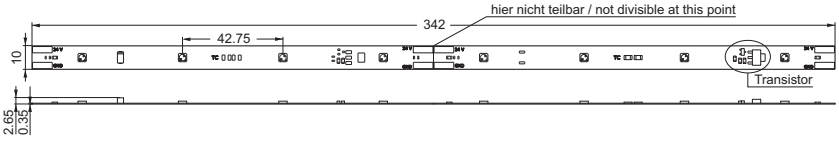

HB2: WU-M-359-SO, -SY

LEDLine Flex SMD monochrome

Type	Ref. No.	Colour	Number of SMDs	Current* A	Dom. wavelength* (nm) Colour temperature* (K)	Typ. luminous flux* lm	Radiation angle* °	Power* W
WU-M-266-SO	**528790**	red	522	1.3	625	750	120	31
WU-M-266-SG	**528788**	green	580	2.6	530	650	120	62
WU-M-266-SB	**528786**	blue	580	2.6	470	300	120	62
WU-M-266-SY	**528792**	yellow	522	1.3	590	840	120	31
WU-M-266-WW	**529512**	warm white	580	2.6	2800 K	1300	120	62
WU-M-266-WW2	**534428**	warm white	580	2.6	2800 K	1700	120	62
WU-M-266-W2	**529524**	white	580	2.6	5000 K	2400	120	62
WU-M-266-W3	**536051**	white	580	2.6	5000 K	3200	120	62

* The values mentioned above represent only statistical variables on account of the complex manufacturing process of light emitting diodes.
The values do not necessarily correspond exactly to the actual parameters of every single product, which can vary from the typical specifications.

LEDLine Flex SMD RGB

Type	Ref. No.	Colour	Current* A			Dom. wavelength* nm			Typ. luminous flux* lm			Radiation angle* °	Max. power* W		
			red	green	blue	red	green	blue	red	green	blue		red	green	blue
WU-M-266-RGB2	**534496**	RGB	0.48	0.96	0.96	624	528	467	528	853	193	110	11.5	23	23

* The values mentioned above represent only statistical variables on account of the complex manufacturing process of light emitting diodes.
The values do not necessarily correspond exactly to the actual parameters of every single product, which can vary from the typical specifications.

LEDLine Flex SMD High Brightness

Type	Ref. No.	Colour	Number of SMDs	Current* A	Dom. wavelength* (nm) Colour temperature* (K)	CRI R_a	Typ. luminous flux* lm	Radiation angle* °	Power* W
new WU-M-359-SO	**535951**	red	112	1.8	625	–	840	120	44
new WU-M-359-SY	**542731**	yellow	112	1.8	592	–	1100	120	44
new WU-M-359-SG	**535950**	green	174	3.8	530	–	2300	120	92
new WU-M-359-SB	**535949**	blue	174	3.8	470	–	640	120	92
WU-M-359-WW	**535948**	warm white	174	3.8	2800 K	75	2600	120	92
WU-M-359-WW-H1	**543666**	warm white	174	3.8	2800 K	92	2200	120	92
WU-M-359-W	**538111**	white	174	3.8	5000 K	70	3250	120	92

* The values mentioned above represent only statistical variables on account of the complex manufacturing process of light emitting diodes.
The values do not necessarily correspond exactly to the actual parameters of every single product, which can vary from the typical specifications.

LEDLine Flex SMD Outdoor monochrome and RGB



Built-in PCB lighting modules
The LEDLine Flex SMD Outdoor is an extremely flexible linear module for applications with high moisture or dust burden conditions. Due to the flexible and compact design, the illumination of complex structures and flat designs can be realised. The IP67 protected LEDLine Flex SMD Outdoor is available in 3 different lengths (see below). The installation is achieved via double-sided adhesive tape affixed to the rear of the PCB.

The colour blend of LEDLine Flex SMD Outdoor RGB can be adjusted using DigiLED control modules. To increase the number of LED modules DigiLED-Slave can be used.

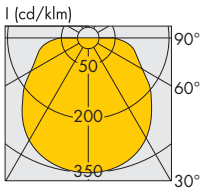

WU-M-266-W

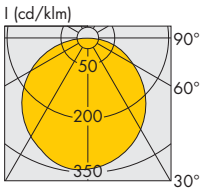

WU-M-266-SO, -SY, -SB, -SG

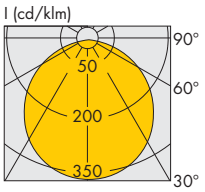

WU-M-266-RGB

Technical notes
Dimensions of PCB: 171x10 mm,
855x10 mm, 1710x10 mm
Encapsulated dimensions (see drawing)
PCB 171 mm: A = 177 mm$^{+3/-6}$
PCB 855 mm: A = 861 mm$^{+3/-6}$
PCB 1710 mm: A = 1716 mm$^{+4/-6}$
Degree of protection: IP67
Allowed operating temperature at t_c point:
–20 to 50 °C
Allowed handling temperature:
10 to 50 °C
Minimum bend radius: 50 mm,
flexible in longitudinal direction only
Pre-assembled with 2 wires or 4 wires
for RGB modules on both end
Voltage supply: 24 V DC

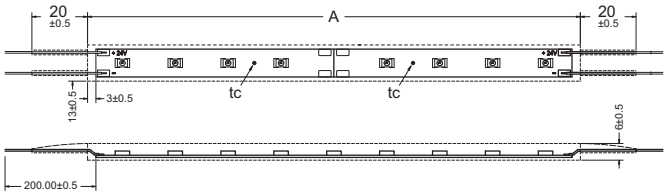

LEDLine Flex Outdoor monochrome

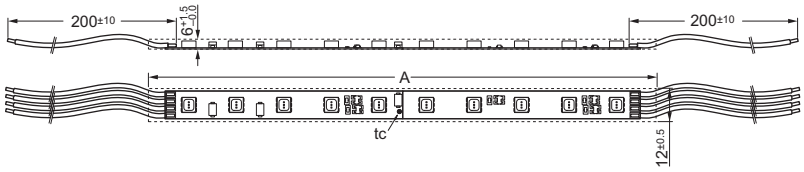

LEDLine Flex Outdoor RGB

Typical applications
Lighting of complex structures
with high moisture or dust burden
Outdoor marking paths, stairs, etc.
Outdoor light advertising
Outdoor entertainment, shop design
Architectural lighting
Outdoor border lighting

LEDLine Flex SMD Outdoor monochrome

Type	Ref. No.	Colour	Number of SMDs	Current* mA	Dom. wavelength* (nm) Colour temperature* (K)	Luminous flux* lm	Radiation angle* °	Power* W
WU-M-266-SO-Outdoor 171mm	**545411**	red	9	22	625	13	120	0.528
WU-M-266-SO-Outdoor 855mm	**545412**	red	45	110	625	65	120	2.640
WU-M-266-SO-Outdoor 1710mm	**545413**	red	90	220	625	130	120	5.280
WU-M-266-SG-Outdoor 171mm	**545408**	green	10	44	530	11	120	1.056
WU-M-266-SG-Outdoor 855mm	**545409**	green	50	220	530	55	120	5.280
WU-M-266-SG-Outdoor 1710mm	**545410**	green	100	440	530	110	120	10.560
WU-M-266-SB-Outdoor 171mm	**545392**	blue	10	44	470	5	120	1.056
WU-M-266-SB-Outdoor 855mm	**545406**	blue	50	220	470	25	120	5.280
WU-M-266-SB-Outdoor 1710mm	**545407**	blue	100	440	470	50	120	10.560
WU-M-266-SY-Outdoor 171mm	**545414**	yellow	9	22	590	15	120	0.528
WU-M-266-SY-Outdoor 855mm	**545415**	yellow	45	110	590	75	120	2.640
WU-M-266-SY-Outdoor 1710mm	**545416**	yellow	90	220	590	150	120	5.280
WU-M-266-WW2-Outdoor 171mm	**545389**	warm white	10	44	2800 K	30	120	1.056
WU-M-266-WW2-Outdoor 855mm	**545390**	warm white	50	220	2800 K	150	120	5.280
WU-M-266-WW2-Outdoor 1710mm	**545391**	warm white	100	440	2800 K	300	120	10.560
WU-M-266-W2-Outdoor 171mm	**545383**	white	10	44	5000 K	23	120	1.056
WU-M-266-W2-Outdoor 855mm	**545384**	white	50	220	5000 K	112	120	5.280
WU-M-266-W2-Outdoor 1710mm	**545385**	white	100	440	5000 K	224	120	10.560
WU-M-266-W3-Outdoor 171mm	**545386**	white	10	44	6600 K	38	120	1.056
WU-M-266-W3-Outdoor 855mm	**545387**	white	50	220	6600 K	190	120	5.280
WU-M-266-W3-Outdoor 1710mm	**545388**	white	100	440	6600 K	380	120	10.560

* The values mentioned above represent only statistical variables on account of the complex manufacturing process of light emitting diodes.
The values do not necessarily correspond exactly to the actual parameters of every single product, which can vary from the typical specifications.

LEDLine Flex SMD Outdoor RGB

Type	Ref. No.	Colour	Number of SMD	Dom. wavelength* nm			Max. luminous flux* lm			Radiation angle* °	Max. power* W		
				red	green	blue	red	green	blue		red	green	blue
WU-M-266-RGB2-Outdoor 171mm	**545417**	RGB	10	624	528	467	22	36	8	110	0.48	0.96	0.96
WU-M-266-RGB2-Outdoor 855mm	**545418**	RGB	50	624	528	467	110	180	40	110	2.40	4.80	4.80
WU-M-266-RGB2-Outdoor 1710mm	**545419**	RGB	100	624	528	467	220	360	80	110	4.80	9.60	9.60

* The values mentioned above represent only statistical variables on account of the complex manufacturing process of light emitting diodes.
The values do not necessarily correspond exactly to the actual parameters of every single product, which can vary from the typical specifications.

Recommended connector
Moisture-resistant, gel-filled connector
Strand diameter: 0.4–0.9 mm
Ref. No.: 534992

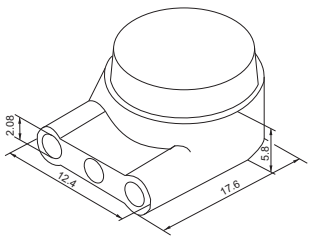



LEDLine (COB)

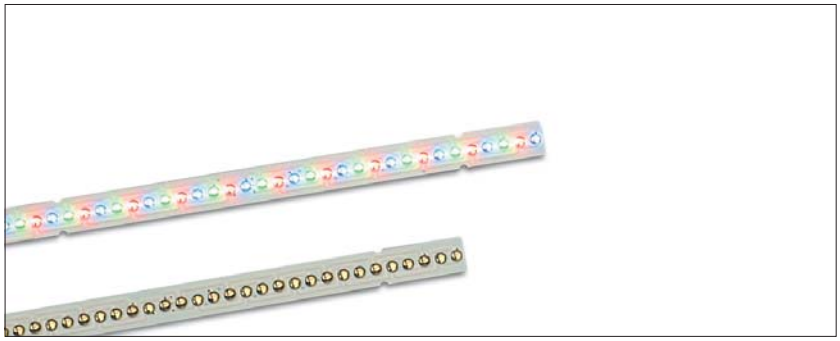

Built-in PCB lighting modules
The universal LEDLine is based on COB (Chip-on-Board) technology. Owing to its homogeneous light distribution, it can be used for high-quality indoor accent and decorative lighting purposes.

Many other fields of application present themselves in combination with VS LighTiles. Using commercially available flatband cables, the LEDLine modules can be directly connected without leaving visible joins. The modules can be operated by VS system converters and controllers.

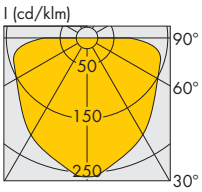

Technical notes
LEDLine 150: ≈ 150x10 mm (LxW)
LEDLine 300: ≈ 300x10 mm (LxW)
LED-chips are driven by constant-current sources
Allowed operating temperature at t_c point:
–20 to 70 °C
Wide radiation angle (170°) due to Chip-on-Board technology
Voltage supply: 24 V DC

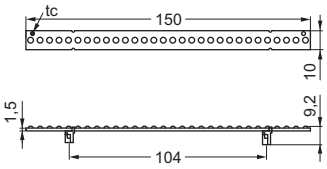

WU-M-306, WU-M-311, WU-M-314

Typical applications
Marking paths, stairs, etc.
Furniture lighting
Light advertising
Entertainment, shop design
Architectural lighting

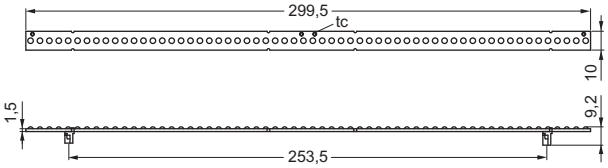

WU-M-305, WU-M-310, WU-M-313

Connecting technology
LED connecting technology for these modules you will find on pages 82 and 83.

LEDLine (COB)

Type	Ref. No.	Colour	Number of LEDs	Current* mA	Dom. wavelength* (nm) Colour temperature* (K)	Luminous flux* lm	Radiation angle* °	Power* W	Max. number of modules** pcs.
LEDLine 150 (COB)									
WU-M-306-RGB	**527656**	RGB	30	100	R 625 G 535 B 470	33	170	2.4	24
WU-M-306-SO	**527657**	red	10	20	625	12	170	0.48	48
WU-M-306-SG	**527658**	green	10	40	535	15	170	0.96	24
WU-M-306-SB	**527659**	blue	10	40	470	5	170	0.96	24
WU-M-306-SY	**527660**	yellow	10	20	590	15	170	0.48	48
WU-M-306-W-3200K	**528472**	warm white	10	40	3200 K	12	170	0.96	24
WU-M-306-W-4200K	**528473**	neutral white	10	40	4200 K	15	170	0.96	24
WU-M-306-W-5400K	**527661**	neutral white	10	40	5400 K	15	170	0.96	24
WU-M-306-W-6500K	**528474**	cool white	10	40	6500 K	14	170	0.96	24
WU-M-314-SOSOSO	**528850**	red	30	60	625	35	170	1.44	48
WU-M-311-SGSGSG	**528855**	green	30	120	535	43	170	2.88	24
WU-M-311-SBSBSB	**528856**	blue	30	120	470	15	170	2.88	24
WU-M-314-SYSYSY	**528908**	yellow	30	60	590	40	170	1.44	48
WU-M-311-WWW-3200K	**528852**	warm white	30	120	3200 K	36	170	2.88	24
WU-M-311-WWW-4200K	**528853**	neutral white	30	120	4200 K	45	170	2.88	24
WU-M-311-WWW-5400K	**528851**	neutral white	30	120	5400 K	45	170	2.88	24
WU-M-311-WWW-6500K	**528854**	cool white	30	120	6500 K	41	170	2.88	24
LEDLine 300 (COB)									
WU-M-305-RGB	**527649**	RGB	60	200	R 625 G 535 B 470	65	170	4.8	12
WU-M-305-SO	**527650**	red	20	40	625	25	170	0.96	24
WU-M-305-SG	**527651**	green	20	80	535	29	170	1.92	12
WU-M-305-SB	**527652**	blue	20	80	470	10	170	1.92	12
WU-M-305-SY	**527653**	yellow	20	40	590	30	170	0.96	24
WU-M-305-W-3200K	**528478**	warm white	20	80	3200 K	24	170	1.92	12
WU-M-305-W-4200K	**528479**	neutral white	20	80	4200 K	30	170	1.92	12
WU-M-305-W-5400K	**527655**	neutral white	20	80	5400 K	30	170	1.92	12
WU-M-305-W-6500K	**528480**	cool white	20	80	6500 K	27	170	1.92	12
WU-M-313-SOSOSO	**528843**	red	60	120	625	70	170	2.88	24
WU-M-310-SGSGSG	**528848**	green	60	240	535	86	170	5.76	12
WU-M-310-SBSBSB	**528849**	blue	60	240	470	30	170	5.76	12
WU-M-313-SYSYSY	**528907**	yellow	60	120	590	80	170	2.88	24
WU-M-310-WWW-3200K	**528845**	warm white	60	240	3200 K	72	170	5.76	12
WU-M-310-WWW-4200K	**528846**	neutral white	60	240	4200 K	90	170	5.76	12
WU-M-310-WWW-5400K	**528844**	neutral white	60	240	5400 K	90	170	5.76	12
WU-M-310-WWW-6500K	**528847**	cool white	60	240	6500 K	81	170	5.76	12

* The values mentioned above represent only statistical variables on account of the complex manufacturing process of light emitting diodes.
The values do not necessarily correspond exactly to the actual parameters of every single product, which can vary from the typical specifications.

** By the use of the DigiLED-Slave the quantity of modules can be increased further.

LEDLine (SMD)

Built-in PCB lighting modules

This universal lighting strip can be used for indoor decorative and accent lighting, like for instance marking paths and contours. Owing to its low height and extra-flat connectors, it is particularly suited to furniture installations. LEDLine modules can be bent into a quarter-circle and can be either adhesive- or screw-mounted. LEDLine can be operated by VS system components.

Technical notes

SMDs are driven by constant-current sources
Wide radiation angle (120°)
Voltage supply: 24 V DC
Minimum order quantity: 54 pcs.



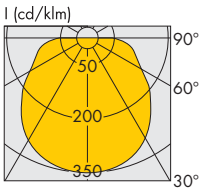

WU-M-225

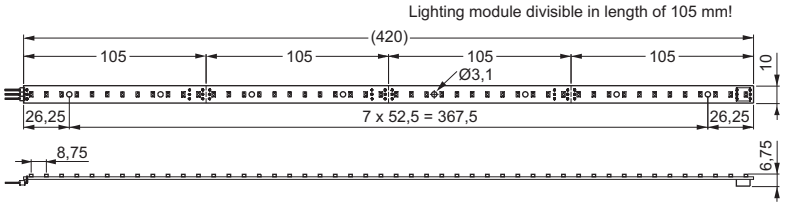

Type	Ref. No.	Number of SMDs pcs.	Current* mA	Typ. colour temperature* K	Typ. luminous flux* lm	Max. power* W	Max. quantity of modules pcs.
LEDLine 420 (SMD)							
WU-M-225 W-48 warm white	**526151**	48	160	2900	140	3.84	6
WU-M-225 W-48 cool white	**525873**	48	160	4700	198	3.84	6

* The values mentioned above represent only statistical variables on account of the complex manufacturing process of light emitting diodes.
The values do not necessarily correspond exactly to the actual parameters of every single product, which can vary from the typical specifications.

LED Connecting Technology – LEDLine (SMD)

Leads, push terminals and mounting
LEDLine SMD modules can be contacted solderfree using a special connecting cable system. Modules can be connected in straight or angled alignment.

Connecting cable for LEDLine (SMD)
Colour: white
Number of strands: 2
(Strand diameter: 0.25 mm²)
Ref. No.: 506492 length: 500 mm
Ref. No.: 507848 length: 1000 mm



Extension cable for LEDLine (SMD)
Colour: white
Number of strands: 2
(Strand diameter: 0.25 mm²)
Length: 500 mm
Ref. No.: 507967



Colour Control Modules – DigiLED

The DigiLED module enables three-channel (RGB) colour control. In addition, it can be used for independent brightness control of three single-colour LED modules. In the simplest case, a keypad enables manual colour control. However, next to custom colour control, it is also possible to call up pre-set colour programs like for instance colour sequences.

The load circuits of the DigiLED modules are electronically protected against overload, overheating and short-circuiting. The input circuit is additionally protected by a safety fuse.

Technical notes
Dimensions: 93 x 58 x 29 mm
Ambient temperature t_a: 0 to 45 °C
(DigiLED DALI t_a: -20 to 40 °C)
Operating voltage: 12–30 V DC
Max. current via LED module: 1 A per conductor
Short-circuit protection: electronic
Overload and temperature protection: reversible
Connector: VS system connector
All DigiLED not for the US market

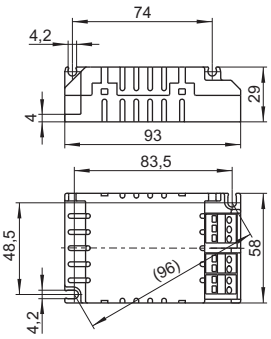



DigiLED Manual

DigiLED Manual
Colour controls via key pads (6 keys) with interface for control via external signal line
Individual colour control or selection of pre-set programs
Type: WU-ST-DigiLED-manuell
Ref. No.: 509377

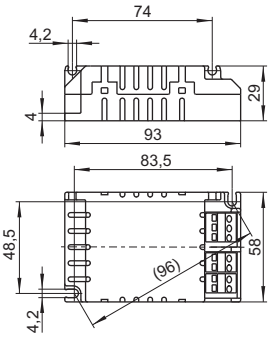



DigiLED DALI

DigiLED DALI
The DigiLED DALI modules enables three-channel (RGB) colour control. In addition, it can be used for independent brightness control of three single-colour LED modules. The DigiLED DALI module offers three addressable 16 bit outputs and can be controlled using all DALI-compatible control devices.
Type: WU-ST-DigiLED-DALI-3CH
Ref. No.: 529620

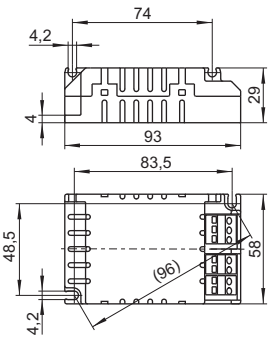



DigiLED DMX

DigiLED DMX
Digital colour controls via DMX light management
Type: WU-ST-DigiLED-DMX-2
Ref. No.: 509378

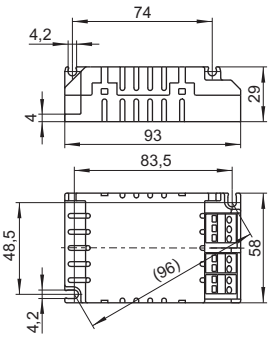



DigiLED IR

DigiLED Wireless IR
Colour adjustment by a portable remote control
Call up of pre-adjusted setting possible data transfer via infra-red
Type: WU-ST-DigiLED-Wireless IR
Ref. No.: 508621

DigiLED Slave
Increase of the system performance
Colour control over upstreamed DigiLED
Combination with all DigiLED variants possible
Type: WU-ST-DigiLED-Slave
Ref. No.: 507222


DigiLED Slave


DigiLED 1–10 V

DigiLED 1–10 V
Colour control by 1–10 V interface
Commercial control elements can be connected
Type: WU-ST-DigiLED-1–10 V
Ref. No.: 505781

Manual controller
Dimmer with low-voltage interface 1–10 V
With push-button change-over switch
Stud 4 mm, for installation in flushtype boxes with 55 mm dia.
Without cover plate: 67x67x51 mm
Ref. No.: 172778
Cover plate with rotary knob: 80x80x9 mm
Colour: white
Ref. No.: 172775

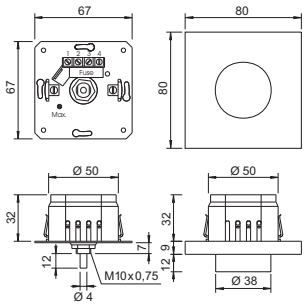


Manual Controller

DigiLED Push
Colour control by separate push-button
Permits retrieval of pre-set programs
Type: WU-ST-006-DigiLED-Push
Ref. No.: 186143

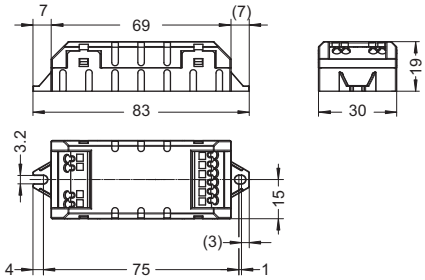


DigiLED Push

DigiLED RF
Easy operation possible via radio frequency (RF) and a keypad with 7 buttons. The operation via radio frequency (RF) enables a flexible installation. Optical "line of sight" or cables are not necessary due to RF operation.
Type: WU-ST-008-DigiLED-RF
Ref. No.: 536842

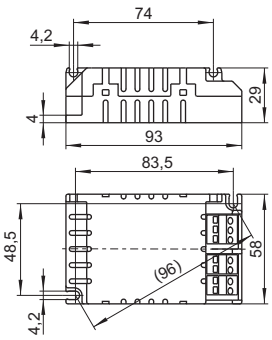


DigiLED RF

Walltransmitter
Required to activate the programs in the DigiLED RF
Dimensions: 86x86x15 mm
Colour: white
Type: WU-ST-009-Walltransmitter
Ref. No.: 536843

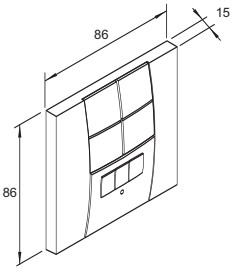


Walltransmitter

LED Connecting Technology

Leads, push terminals and mounting
LEDLine COB components from VS can be wired by the use of commercial 6-strand flatband cable. Thus an easy, flexible and economical installation is possible.

The user can cut the leads to length on location and mount push terminals based on IDC technology.

Flatband cable
Colour: grey
Number of strands: 6
Wire according to AWG28
(Strand diameter: 0.09 mm²)
Load capacity: 1.2 A/strand
Width: 7.3 mm, thickness: 1 mm
Type: WU-VB-KB-6x28-grau
Ref. No.: 505222 length: 100 m
Push connector on both sides
Ref. No.: 507609 length: 60 mm
Ref. No.: 507610 length: 150 mm

Screened flatband cable
Colour: grey
Number of strands: 6
Connecting cable: spacing 1.27 mm screened for augmented EMC requirements
Length: 100 m
Ref. No.: 506854

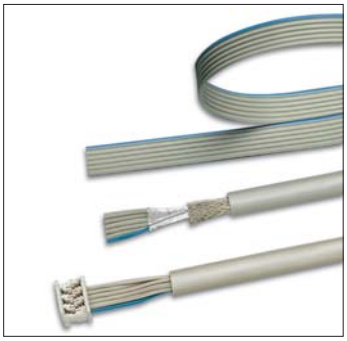

Push connectors
Material: PBT GF
The push connector forms a connecting error proof snap in connection between lead and LED system components. The connection with the cable is assured by IDC contacts. As the push connector can be mounted in any part of the lead a very flexible system topology is possible.
Type: WU-VB-BU-6
Ref. No.: 507051 assembled for customer specified application
Ref. No.: 505219 not assembled



Pre-assembled flatband cables
Apart from individually pre-assembled cables, Vossloh-Schwabe also provides various inexpensive standard cable lengths for simple wiring of the DigiLED-to-LEDLine COB interface.
Ref. No.: 534401 for 4 modules
Ref. No.: 534402 for 8 modules
Ref. No.: 534403 for 12 modules

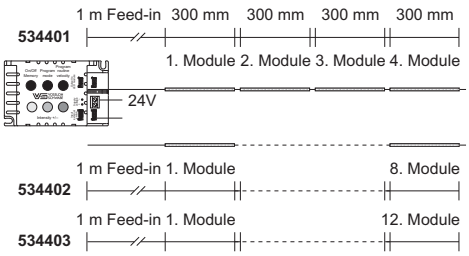

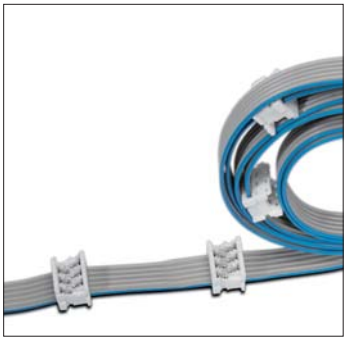

Crimping tool
For WU-VB-BU-6
To process and mount flatband cables
Ref. No.: 506835





LineClip for LEDLine modules
Support for linear modules with 10 mm width
Ref. No.: 507775

LED Connecting Technology

PCB distributors
The distribution boards of VS' LED system are designed to enable a variety of easy and flexible wiring layouts.

Coupling adapter mono
To connect monochrome light modules to standard installation technology
Not suitable for connection of modules in RGB systems
Type: WU-VB-KM-1-1
Ref. No.: 506066

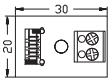



Coupling adapters
To extend pre-equipped connection leads
Type: WU-VB-KP-1-1
Ref. No.: 505217

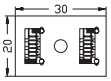



Distributors
Distributors enable the secondary lead of the control component to be extended (four-way) to form four leads. In addition, the possibility exists of connecting external components (e.g. LEDLine Flex SMD RGB) via a further-lead using conventional screw terminal.
Type: WU-VB-VT-1-4
Ref. No.: 504964

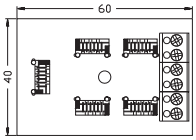

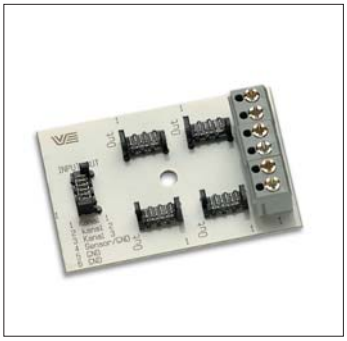

3 channel splitter
Splitter for operating three single-colour LED modules using a three-channel control device.
Type: WU-VB-SP-1-3
Ref. No.: 505218

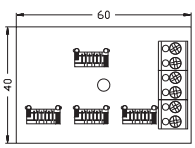

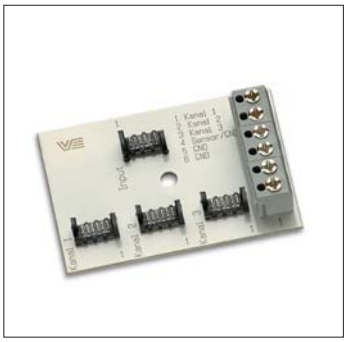

Typical RGB Wiring Layout

The diagram shows the typical wiring layout of the LED modules in conjunction with VS 24 V converters, colour control modules (DigiLED) and distributors (e.g.: four-way distributor Ref. No. 504964).

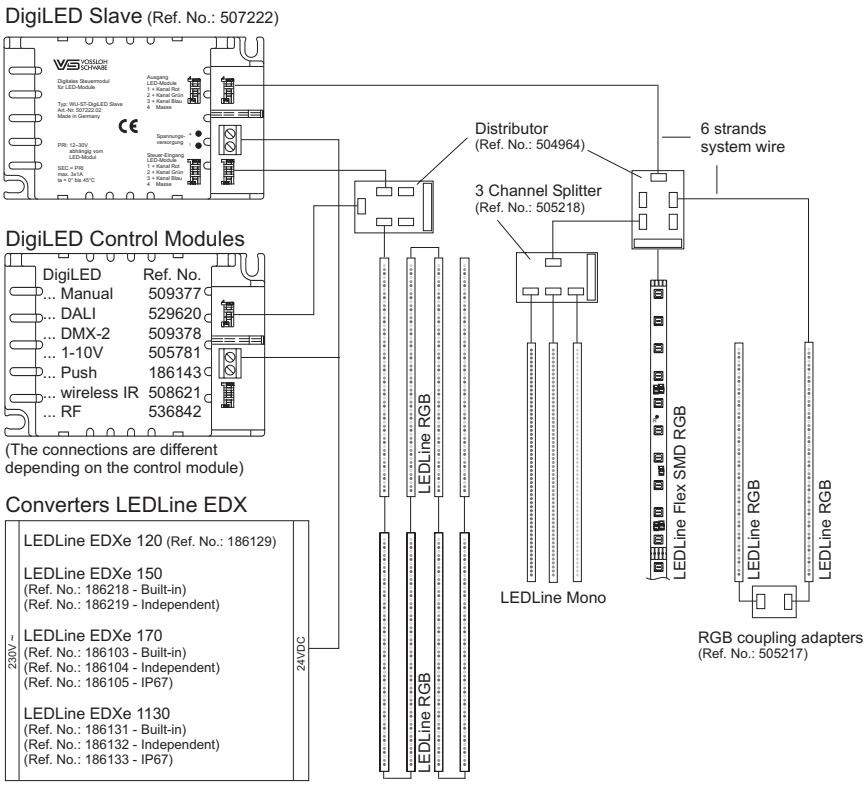

LighTile

Lighting modules
LighTiles consist of a laser-engraved, edge-lit acrylic substrate.

The LighTiles need to be equipped with extra-flat, COB technology-based LEDLine modules, whereby the RGB versions enable LighTiles to be configured in any desired light colour.

Depending on the required light output, between one and all four sides of the LighTiles can be edge-lit.

LighTiles are ideal for ceiling or wall-mounted accent or decorative lighting, but are also suitable for functional lighting needs, e.g. for illuminated advertisements, information panels and emergency exit signs.

The reference numbers quoted below refer to the acrylic LighTiles with a custom-fitted and assembled aluminium frame only. The LEDLine PCBs must be ordered separately to suit the given assembly.

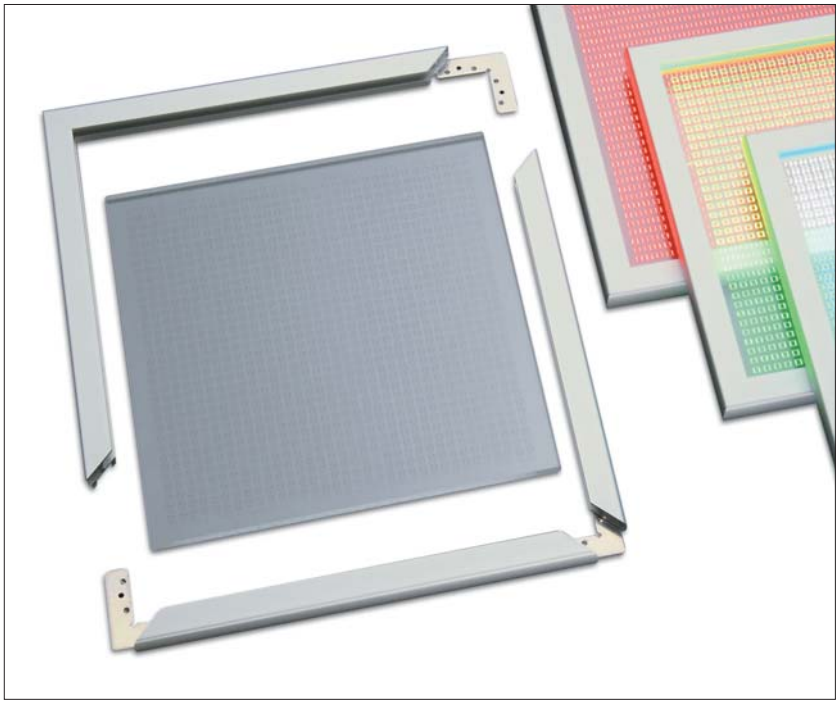

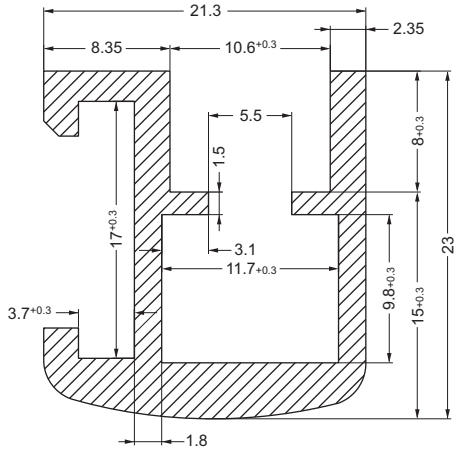

Frame

Type	Ref. No.	Weight	Dimensions of the acrylic substrate		Dimensions incl. frame	
		kg	Length (mm)	Width (mm)	Length (mm)	Width (mm)
WU-LT-300x300	**505170**	1.6	300	300	330	330
WU-LT-600x300	**534025**	2.5	600	300	630	330
WU-LT-600x600	**505183**	5.2	600	600	630	630
WU-LT-900x600	**505185**	7.6	900	600	930	630
WU-LT-900x900	**505192**	13.0	900	900	930	930

As standard with laser-engraved pattern in clear acrylic panel. White diffuse acrylic panel available on request.

new

Thermally Conductive Adhesive Transfer Tapes for LED Modules

3M™ type 8810 and Bergquist Bond-Ply® 100

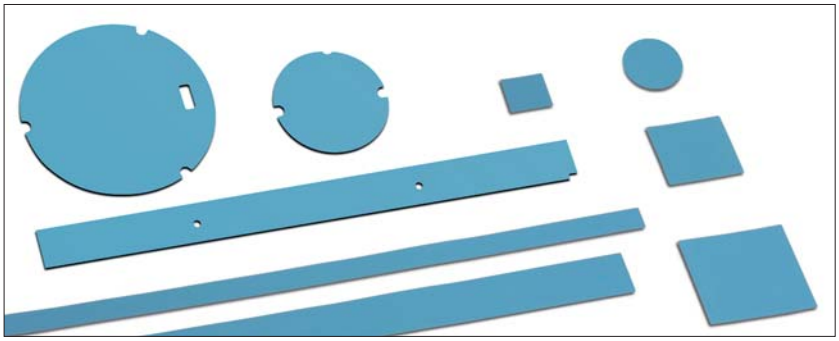

Thermally Conductive Adhesive Transfer Tapes are designed to provide a preferential heat-transfer path between heat-generating components and heat-sinks or other cooling devices.

These tapes are tacky pressure sensitive adhesives loaded with thermally conductive ceramic fillers that do not require a heat cure cycle to form an excellent bond to many substrates. Only pressure is needed to form an excellent bond and thermal interface.

The specialized chemistry renders them modestly soft and able to wet to many surfaces, allowing them to conform well to non-flat substrates, provide high adhesion, and act as a good thermal interface.

The specialized acrylic chemistry of the tapes provides for excellent thermal stability of the base polymer. The thermally conductive tapes are provided on a silicone treated polyester release liner for ease of handling and die cutting. The tapes offer excellent adhesive performance with good wetting and flow onto many substrate surfaces.

Depending on the type of application and/or the expected ambient conditions, the modules must be additionally secured to ensure optimum fixing.

For detailed information and application guidelines see 3M or Bergquist datasheet for thermally conductive adhesive transfer taper (8805; 8810; 8815; 8820; www.3m.com or Bergquist Bond-Ply® 100; www.bergquistcompany.com).

	Type	Ref. No.	Size mm	Tape thickness mm	Liner thickness µm	Thermal conductive R_{th} K/W	For VS LED modules
	For round LED modules						
	Adhesive pad Ø28	**536248**	Ø28	0.25	37.5 - 30	1.0	PowerEmitter
	Adhesive pad Ø43	**536977**	Ø43	0.20	76	0.5	TriplePowerEmitter Ø45mm, Ø50mm
	Adhesive pad Ø63	**539625**	Ø63	0.25	37.5-50	0.5	High Power 24V RGB Triple
	Adhesive pad Ø107	**539624**	Ø107	0.25	37.5-50	0.1	High Power 24V RGB Flood
	For square LED modules						
	Adhesive pad 19x19	**529158**	19x19	0.25	37.5-50	1.4	WU-M-293
	Adhesive pad 34x34	**529155**	34x34	0.25	37.5-50	0.5	WU-M-294
	Adhesive pad 49x49	**529157**	49x49	0.25	37.5-50	0.3	WU-M-295, TriplePowerEmitter Ø50mm
	For linear LED modules						
new	Adhesive pad 278x13	**548179**	278x13	0.25	35.5-50	0.3	LUGA Line
	Adhesive pad 306x11	**529156**	306x11	0.25	37.5-50	0.3	WU-M-291, WU-M-292
	Adhesive pad 320x35	**533815**	320x35	0.20	76	0.1	LEDLine High Power
	Adhesive pad 297x23	**539626**	297x23	0.25	37.5-50	0.1	High Power 24V RGB Line

This technical information for 3M™ Thermally Conductive Adhesive Transfer Tape 8810 or Bergquist Bond-Ply® 100 should be considered representative or typical only and should not be used for specification purposes.

Thermal Tapes for LED Modules

Thermal conductive graphite tape
For modules for shop design
Thermal resistance: R_{th} 0.04 K/W
Type: Thermal tape Ø 48 mm Graphite
new **Ref. No.: 545689**

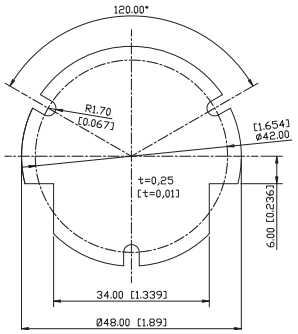



Thermal conductive tape
For LED modules ME/S (see page 28)
Type: Thermal tape 54x54 mm
new **Ref. No.: 548252**

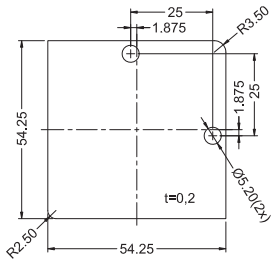



Electronic Converters for LED Modules 24 V

If LED modules are used that are connected in parallel, the voltage-stabilising system is activated. The advantages include easy extendibility and system safety on account of the low voltage.

The electronic converters made by Vossloh-Schwabe guarantee a broad output range at a voltage of 24 V. Typical areas of application are architectural and general lighting, the replacement of halogen lamps as well as furniture lighting.

Devices with the particularly high IP67 degree of protection are designed for use in outdoor applications.

General technical notes

Short-circuit protection: electronic
Overload and temperature protection: reversible
Protection against "no load" operation
Protection class I (EDXe 120: protection class II)

	Max. output W	Type	Ref. No.	Mains voltage 50, 60 Hz V	Voltage output V	Mains current mA	Output current A	Ambient temperature t_a °C	Casing temperature t_c °C	Power factor	Drawing/ photo	With cord grip	Weight g
	0.1 - 20	EDXe 120	**186129**	220 - 240	24 ±0.5		0.85	0 to 45	75	0.5	A	–	155
new	0.0 - 50	EDXe 150/24 V	**186218**	220 - 240	24 ±0.48	260/235	0.0 - 2.1	- 40 to 45	70	0.97	B	–	290
new	0.0 - 50	EDXe 150/24 V	**186219**	220 - 240	24 ±0.48	260/235	0.0 - 2.1	- 40 to 45	70	0.97	C	yes	320
	0.0 - 70	EDXe 170/24 V	**186103**	220 - 240	24 ±0.48	360/310	0.0 - 2.9	- 20 to 45	70	0.97	B	–	340
	0.0 - 70	EDXe 170/24 V	**186104**	220 - 240	24 ±0.48	360/310	0.0 - 2.9	- 20 to 45	70	0.97	C	yes	360
	0.0 - 130	EDXe 1130/24 V	**186131**	220 - 240	24 ±2%	640/585	0.0 - 5.4	- 20 to 45	75	0.98	B	–	370
	0.0 - 130	EDXe 1130/24 V	**186132**	220 - 240	24 ±2%	640/585	0.0 - 5.4	- 20 to 45	75	0.98	C	yes	390
Degree of protection: IP67													
	0.0 - 70	EDXe 170/24 V IP67	**186105**	220 - 240	24 ±0.48	360/310	0.0 - 2.9	- 20 to 45	70	0.97	D	–	515
	0.0 - 130	EDXe 1130/24 V IP67	**186133**	220 - 240	24 ±0.48	640/585	0.0 - 5.4	- 20 to 45	70	0.97	D	–	545

Converter EDXe 120

Dimensionse (LxWxH): 182x42x18 mm
(Drawing: A)
Degree of protection: IP20
Connections/leads:
prim.: mains connection cable, length: 1.48 m
sec.: screw terminals 1.5 mm²

Ref. No.: 186129



A – EDXe 120

A

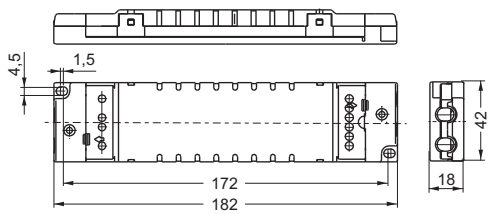

Converters EDXe 150, 170 and 1130/24V without cord grip
Dimensions (LxWxH): 187x60x36 mm
Fixing centres: 178 mm (drawing: B)
Degree of protection: IP20, SELV-equivalent
Push-in terminals with push button: 2.5 mm² solid lead
Type: EDXe 150/24 V
new **Ref. No.: 186218** output: 0–50 W
Type: EDXe 170/24 V
Ref. No.: 186103 output: 0–70 W
Type: EDXe 1130/24 V
Dimensions (LxWxH): 200x61x49 mm
Fixing centres: 191 mm (drawing: B)
Ref. No.: 186131 output: 0–130 W

Converters EDXe 150, 170 and 1130/24V with cord grip
Dimensions (LxWxH): 224x60x36 mm
Fixing centres: 210 mm (drawing: C)
Cord grip approved for mains leads:
H03W-F 3X0.75 mm² or NYM 3X1,5 mm²
Cord grip approved fo routput leads:
SIHY-Cu 4X1 mm² or SIHSI-Cu 4X1 mm²
Type: EDXe 150/24 V
new **Ref. No.: 186219** output: 0–50 W
Type: EDXe 170/24 V
Ref. No.: 186104 output: 0–70 W
Type: EDXe 1130/24 V
Dimensions (LxWxH): 245x61x49 mm
Fixing centres: 231 mm (drawing: C)
Ref. No.: 186132 output: 0–130 W



B and C – EDXe 150 / EDXe 170 / EDXe 1130

B

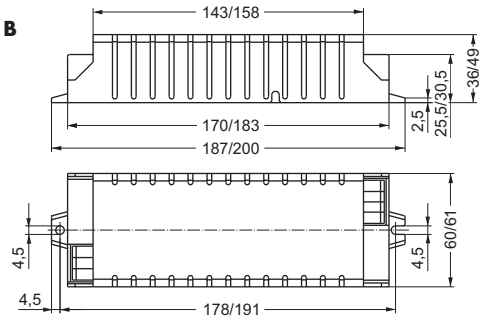

C – with cord grip

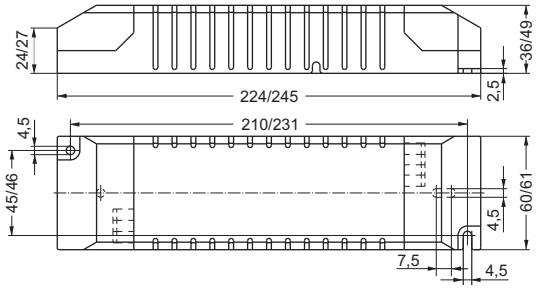

Converter EDXe 170 IP67/24 V
Dimensions (LxWxH): 260x71.6x51 mm
Fixing centres: 235 mm (drawing: D)
Degree of protection: casing IP67, SELV-equivalent
Pre-assembled connection:
prim.: 3X1 mm², H05RN-F, length: 500 mm
sec.: 2X2 mm², S07RN-F, length: 500 mm
Ref. No.: 186105 output: 0–70 W



D – EDXe 170 IP67 / EDXe 1130 IP67

Converter EDXe 1130 IP67/24 V
Dimensions (LxWxH): 225x71.6x51 mm
Fixing centres: 235 mm (drawing: D)
Degree of protection: casing IP67, SELV-equivalent
Pre-assembled connection:
prim.: 3X1 mm², H05RN-F, length: 500 mm
sec.: 2X2 mm², S07RN-F, length: 500 mm
Ref. No.: 186133 output: 0–130 W

D

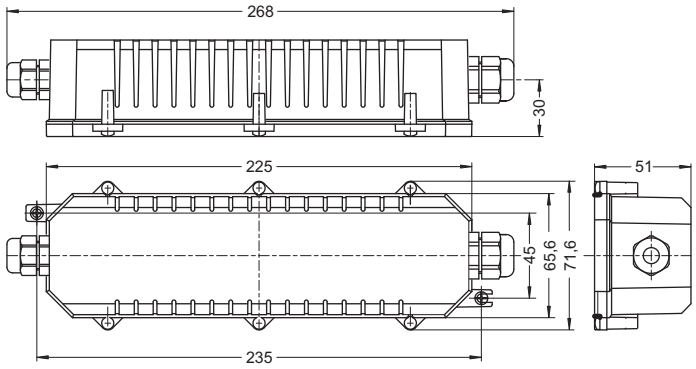

Electronic Converters for LED Modules 12 V

If LED modules are used that are connected in parallel, the voltage-stabilising system is activated. The advantages include easy extendibility and system safety on account of the low voltage.

The electronic converters made by Vossloh-Schwabe guarantee a broad output range at a voltage of 12 V. Typical areas of application are architectural and general lighting, the replacement of halogen lamps as well as furniture lighting.

Devices with the particularly high IP67 degree of protection are designed for use in outdoor applications.

General technical notes

Short-circuit protection: electronic
Overload and temperature protection: reversible
Protection against "no load" operation
Protection class I (EDXe 112: protection class II)

	Max. power W	Type	Ref. No.	Mains voltage 50, 60 Hz V	Voltage output V	Mains current mA	Output current A	Ambient temperature t_a °C	Casing temperature t_c °C	Power factor	Drawing Photo	With cord grip	Weight g
new	0.1 - 12	EDXe 112	**186204**	220-240	12 ±0.6		1	- 20 to 50	75	0.57	A	–	60
new	0.0-50	EDXe 150/12 V	**186216**	220-240	12.1 ±0.24	250/240	0.0-4.2	- 40 to 45	70	0.97	B	–	320
new	0.0-50	EDXe 150/12 V	**186217**	220-240	12.1 ±0.24	250/240	0.0-4.2	- 40 to 45	70	0.97	C	yes	340
	0.0-70	EDXe 170/12 V	**186112**	220-240	12.1 ±0.24	365/335	0.0-5.8	- 20 to 45	70	0.97	B	–	340
	0.0-70	EDXe 170/12 V	**186113**	220-240	12.1 ±0.24	365/335	0.0-5.8	- 20 to 45	70	0.97	C	yes	360
	Degree of protection: IP67												
	0.0-70	EDXe 170/12 V IP67	**186114**	220-240	12.1 ±0.24	365/335	0.0-5.8	- 20 to 45	70	0.97	D	–	515

Converter EDXe 112/12 V

Dimensions (LxWxH): 103.5 x 36 x 22 mm
Fixing centres: 92 mm (drawing: A)
Degree of protection: IP20, SELV-equivalent
Prim. and sec. connections:
each with 2 x 2.5 mm² screw terminals

new **Ref. No.: 186204**



A – EDXe 112

A

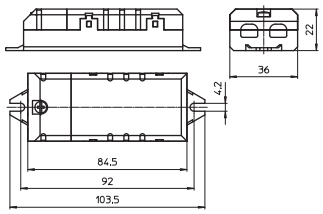

Converters EDXe 150 and 170/12V without cord grip
Dimensions (LxWxH): 187x60x36 mm
Fixing centres: 178 mm (drawing: B)
Degree of protection: IP20, SELV-equivalent
Push-in terminals with push button: 2.5 mm² solid lead
Type: EDXe 150/12 V
new **Ref. No.: 186216** output: 0–50 W
Dimensions (LxWxH): 210x61x49 mm
Fixing centres: 191 mm (drawing: B)
Type: EDXe 170/12 V
Ref. No.: 186112 output: 0–70 W

Converter EDXe 150 and 170/12V with cord grip
Dimensions (LxWxH): 224x60x36 mm
Fixing centres: 210 mm (drawing: C)
Cord grip approved for mains leads:
H03W-F 3X0.75 mm² or NYM 3X1.5 mm²
Cord grip approved fo routput leads:
SIHY-Cu 4X1 mm² or SIHSI-Cu 4X1 mm²
Type: EDXe 150/12 V
new **Ref. No.: 186217** output: 0–50 W
Dimensions (LxWxH): 245x61x49 mm
Fixing centres: 231 mm (drawing: C)
Type: EDXe 170/12 V
Ref. No.: 186113 output: 0–70 W



B and C – EDXe 150 / EDXe 170

B

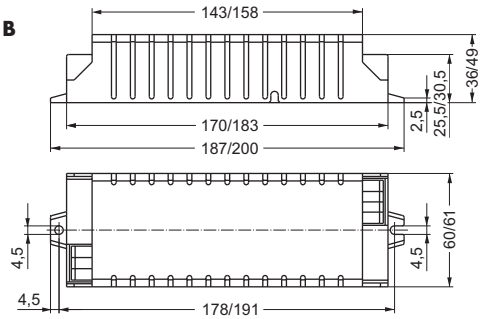

C – with cord grip

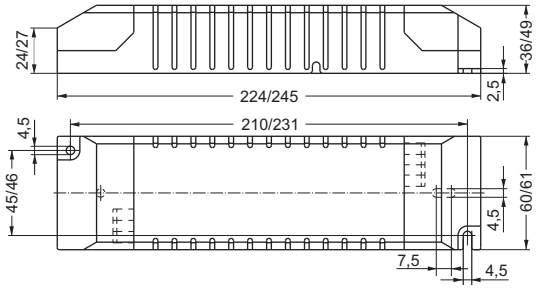

Converter EDXe 170 IP67/12 V
Dimensions (LxWxH): 268x71.6x51 mm
Fixing centres: 235 mm (drawing: D)
Degree of protection: casing IP67, SELV-equivalent
Pre-assembled connection:
prim.: 3X1 mm², H05RN-F, length: 500 mm
sec.: 2X2 mm², S07RN-F, length: 500 mm
Ref. No.: 186114 output: 0–70 W



EDXe 170 IP67

D

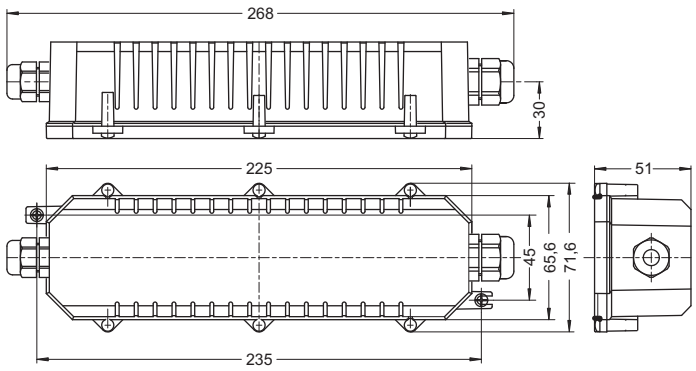

2 Components for LED Applications

General information on LED technology	92–99
CIE chromaticity chart	95
Assembly instructions – LED components	96–98
Assembly and safety information for LEDSpots and LED modules with heat sink	98–99
General technical details	**533–540**
Glossary	**541–543**

General information on LED technology

Thanks to the constant developmental progress made in LED semiconductor technology, the fields of application for LEDs are growing continuously. Mood and architectural lighting, for instance, are already benefiting from the saturated colours of and possibilities afforded by RGB colour control. Ever higher light efficiency levels at higher currents are making white LEDs increasingly attractive for general lighting. Among others, further decisive advantages are great longevity, low energy consumption, neither UV or IR radiation nor any hazardous substances.

The key basis of modern optoelectronics is the availability of high-performance LEDs in the three primary colours red, green and blue as well as white and warm white. By assembling these on circuit boards and in combination with converters and control systems, lighting systems can be created for the most diverse areas of use.

Vossloh-Schwabe's production of LED modules is based on tried-and-tested COB and SMD technology. This makes it possible to design modules in various dimensions and performance classes. COB (Chip On Board) technology enables super-flat designs with very high chip densities. SMD (Surface Mounted Device Technology) enables convenient, quick and simultaneous assembly of LED and electronics devices.

Working principle of light emitting diodes (LEDs)

An LED semiconductor chip is a semiconductor component that is made up of two differently doped crystal-layers, one of which positive (p) and the other negative (n). Light is emitted at the depletion-layer pn boundary for a current flow in forward direction.

An LED converts applied electric energy into visible electromagnetic radiation. The construction and doping of a semiconductor depends on the desired wavelength λ (colour), which can only be monochromatic (red, orange, yellow, green or blue). Colour blends are created by varying the number of LEDs in the individual colours. By adding certain converter materials, LEDs can also produce white and warm white light. This type of light generation using a semiconductor is generally referred to as luminescence, i.e. the generation of cold light whose rays contain no warmth and are emitted without infrared (IR).

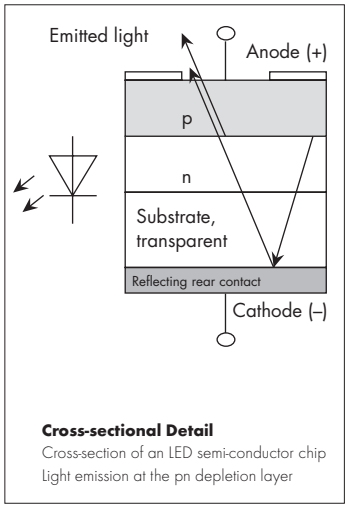

Cross-sectional Detail
Cross-section of an LED semi-conductor chip
Light emission at the pn depletion layer

Semiconductor materials for LED chips

Irrespective of the specific model, an LED always consists of the following components: leadframe, LED chip and contacting using conductive adhesive and bonding.
While the leadframe can be made of a PCB or ceramics, plastics and other materials, the LED chips are mounted on a die-cut reflector (cathode) using conductive adhesive to achieve higher light intensities with a focused beam of light. The anode is connected using bonding wire.
The optical viewing angle (φ) of an LED is determined by the geometry of the casing including reflector and the position of the chip within the casing.
Small in size and highly resistant against mechanical impact/stress, LEDs are an ideal component for lighting applications. Special modular solutions are also available for applications involving differing ambient conditions (humidity, ambient temperature, etc.).

Visible light within the electromagnetic spectrum

Visible light only accounts for a small part of the electromagnetic spectrum. The part of the electromagnetic spectrum that is visible for humans ranges from ultraviolet (λ = 380 nm) to dark red (λ = 780 nm).

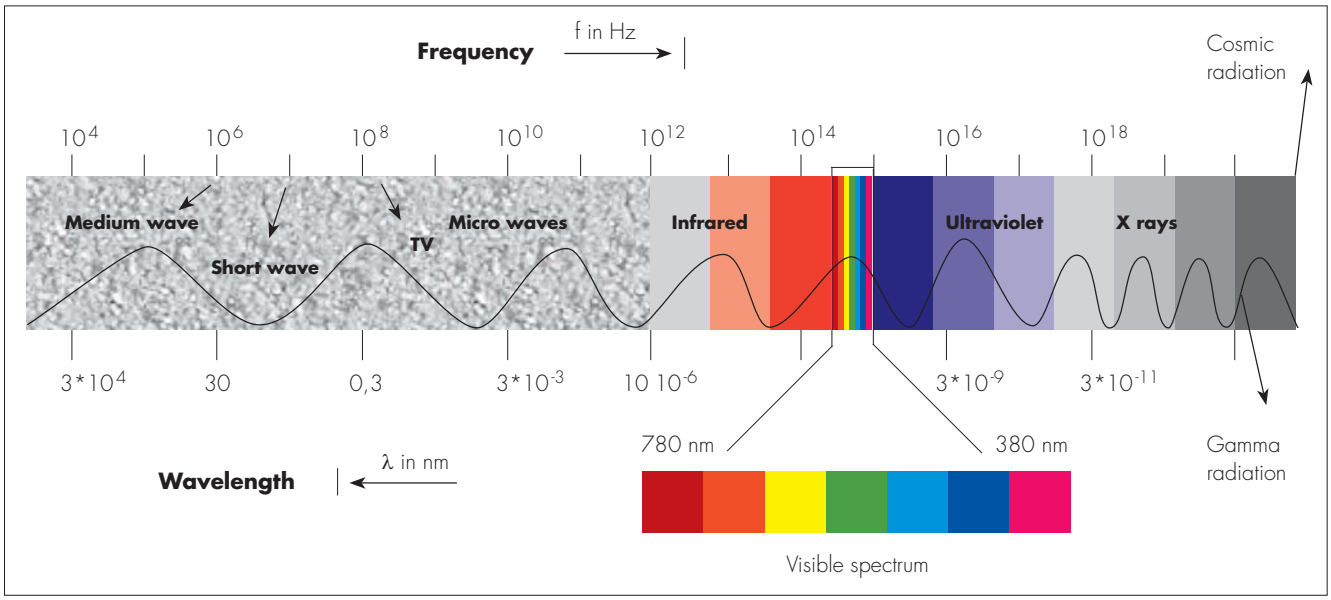

Light sensitivity of the human eye

By day, the maximum light sensitivity (Km) of the human eye for green is at λ = 555 nm and drops to λ = 510 nm by night. Light sensitivity falls off sharply for both higher and lower wavelengths and only totals 1% of day vision for blue at λ = 430 nm and dark red at λ = 720 nm. Thus, in order for the human eye to perceive light of these wavelengths at the same intensity as yellow-green light, its luminance LV needs to be 100 times greater.

Degree of spectral light sensitivity

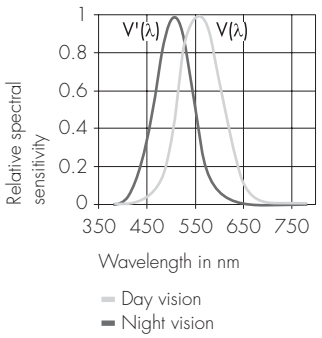

Service life of LEDs

The service life of an LED is determined by various factors:

- the degradation rate of the semiconductor material and the encapsulation material
- the applied operating current I_F
- the ambient temperature t_a during operation and
- the thermal resistance

The term degradation describes the decrease in brightness of an LED chip as a result of the applied forward current during normal operation. Given normal operating conditions (t_a = 25 °C at I_F = 10–30 mA), LEDs will provide a service life of up to 100,000 operating hours (typically 50,000 hours for High Power applications), after which time the brightness of the LED will have dropped to 70% of its original value.

LED efficiency

In theory, the internal efficiency of an LED chip is 90%, meaning that 90% of the applied electrical energy is converted into visible light at the pn junction layer.

However, a part of the light emitted at the pn junction layer cannot pass through the semiconductor structure and it remains a major technological challenge to optimise the coupling of light out of the chip with the help of innovative designs. These processes determine the external degree of LED efficiency, which denotes the magnitude of visible output that can pass through the semiconductor structure when, for instance, 1 W of electrical power is applied to an LED.

Colour design with LEDs

CIE Chromaticity Chart (CIE 1931 according to DIN 5033)

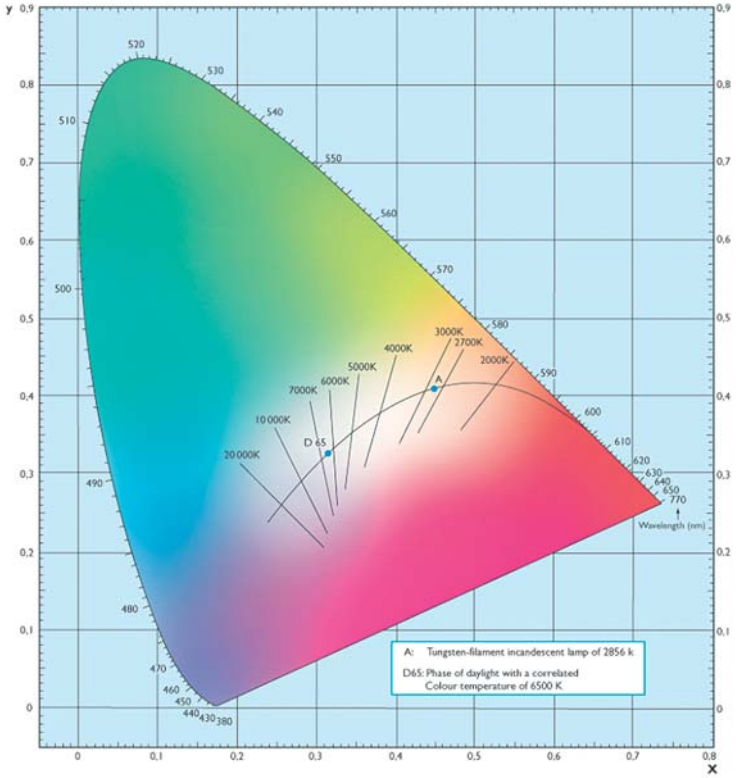

The CIE chromaticity triangle (standardised CIE 1931 chromaticity chart according to DIN 5033) makes it possible to precisely plot the colours of light sources and objects using two standardised (and previously gauged) chromaticity coordinates, the x and y values. Every point in this chart represents the chromaticity location of a certain chroma. Colours of the same chromaticity only differ from each other in terms of their intensity (colour saturation). The so-called "no-colour point" (white, grey and black, depending on brightness) is situated in the middle of the chart at x = 0.33 and y = 0.33.

The boundary of the chromaticity chart is made up of the gamut of spectral colours from 380 nm (blue-violet) to 780 nm (dark red) and the so-called purple boundary. As a result of additive mixing of two or more coloured light sources the chromaticity coordinates are always along a direct line between the starting coordinates.

When using LED lighting, different colours can be created using additive colour mixing (RGB) or by transforming the wavelengths a diode emits by adding a luminescent material in a manner similar to fluorescent lamps. In the case of additive colour mixing/control, appropriate control devices are used to adjust the brightness of the individual LED colours (RGB) to create the desired light colour.

LED system components

- LED light modules
- LED operating devices
- LED control modules
- LED connection technology

When selecting LED components, it is important to take account of their technical specifications, especially with regard to voltage range, current and temperature. VS provides a large range of components for the various areas that all go to build a perfectly matched system. The technical specifications of the various components can be found on the product pages. All VS LED operating devices work with a safety extra-low voltage (SELV) or SELV equivalent on the output side.

Assembly Instructions for LEDs

For mounting and installing LED components

Mandatory regulations

DIN VDE 0100	Erection of low voltage installations
EN 60598-1	Luminaires – part 1: general requirements and tests
EN 60838-2-2	Miscellaneous lampholders – part 2-2: particular requirements – connectors for LED-modules
EN 61347-1	Lamp controlgear – part 1: general and safety requirements
EN 61347-2-11	Controlgear – part 2-11: particular requirements for miscellaneous electronic circuits used with luminaires
EN 61347-2-13	Lamp controlgear – part 2-13: particular requirements for DC or AC supplied electronic controlgear for LED modules
EN 62031	LED modules for general lighting – safety specifications
EN 62384	DC or AC supplied control gear for LED modules – performance requirements
EN 55015	Limits and methods of measurement of radio disturbance characteristics of electrical lighting and similar equipment
EN 61000-3-2	Electromagnetic compatibility (EMC) – part 3-2: limits – limits for harmonic current emissions (equipment input current = 16 A per phase)
EN 61000-3-3	Electromagnetic compatibility (EMC) – part 3-3: limits – limitation of voltage fluctuations and flicker (equipment input current = 16 A per phase)
EN 61547	Equipment for general lighting purposes – EMC immunity requirements
EN 62471	Photobiological safety of lamps and lamp systems

Mechanical mounting of LED operating devices

Surface	Solid, flat surface for good heat discharge required. Avoid mounting protruding surfaces.
Mounting location	Converters must be protected against moisture and heat.
Installation in external luminaires	Luminaire requires water protection rate of = 4 (e.g. IP54).
Heat transfer	If the converter is destined for installation in a luminaire, sufficient heat transfer must be ensured between the converter and the luminaire casing. Converters should be mounted with the greatest possible clearance to sources of heat. During operation, the temperature measured at the t_c point of the converter must not exceed the specified maximum value.

Additional mounting instructions for independent LED operating devices

Mounting position	Any
Clearance	Min. of 0.10 m from walls, ceilings, insulation Min. of 0.10 m from other electronic ballasts Min. of 0.25 m from sources of heat (LEDs or other lamps)
Surface	Solid; device must not be allowed to sink into insulation materials

Safety information for LED modules

Warning	The installation of LED modules may only be undertaken by qualified staff. Installation must be conducted at zero potential after disconnection from the line. Modules can have sharp edges or corners. Please take special care during installation to avoid injury. The High Power 24 V Triple, Line and Flood, the HighPerformance, Power Emitter, TriplePowerEmitter, LEDLine High Power, XP and HC Line Spot and Mini modules can get hot. Please provide warning notices at the luminaire body if necessary.

Assembly and handling information for LED modules

LED modules and all PCB components must not be subjected to undue mechanical stress:

- LED modules must not be handled as bulk cargo.
- Shear and pressure stress must be avoided on SMD LEDs and the grouting material of COB LEDs during assembly and handling.

The circuit path must not be damaged or interrupted. We recommend using clips or plastic screws for installation purposes to avoid short circuits and damage to the modules.

The LED modules are not protected against short-circuiting, overloading or overheating. The use of Vossloh-Schwabe electronic power supply units is therefore absolutely essential. Using other power supply units is not recommended. Please ensure you choose the correct electronic power supply unit for the module in question and that the respective output parameters (current, voltage, wattage) are correct (see www.vossloh-schwabe.com).

Please ensure standard ESD (electrostatic discharge) protection measures are employed when handling and installing LED modules. Electrostatic discharge can damage LEDs.

Please ensure the correct polarity of the leads prior to commissioning. Reversed polarity can destroy the modules.

The modules are not protected against dust or moisture (except LEDLine Flex SMD Outdoor). When LED modules are operated in unduly moist or dusty environments, care must be taken to ensure each module is built into a protective casing in compliance with the correct IP classification or provided with corrosion protection. Damage caused by moisture and/or corrosion will not be recognised as a material or manufacturing defect.

To ensure smooth module operation, care must be taken that module temperatures at the t_c point never exceed the maximum values stipulated in the data on catalogue pages.

Due to the numerous installation options and differing operating conditions, no precise installation guidelines can be provided that will ensure the maximum temperature values are never exceeded. In principle, the High Power 24 V Triple, Line and Flood, the HighPerformance, PowerEmitter, TriplePowerEmitter, LEDLine High Power, XP and HC Line, Spot and Mini can be mounted on a flat metal surface that must, however, provide a large enough surface area to ensure the generated heat can be dissipated to the surroundings.

Please ensure adhesive pads or other products with adhesive areas (LEDLine Flex SMD, LEDLine Flex SMD Outdoor) are only used on dry and clean surfaces that are free of grease, oil, silicone and dirt particles. Owing to the varying application options and different types of surface as well as ambient conditions, VS accepts no liability for the quality of the adhesive bond achieved when mounting these products.

Assembly and safety information for LEDSpots and LED modules with heat sink

Installation and maintenance must always be performed by a qualified fitter in accordance with relevant legislation. The following instructions must be strictly observed. Vossloh-Schwabe Deutschland GmbH accepts no liability for any possible inaccuracies during installation, any non-compliance with these instructions or for any possible omissions in this publication.

In addition, Vossloh-Schwabe Deutschland GmbH reserves the right to make modifications at any time and without prior notification. This data sheet is an integral part of the equipment and its safety devices and should therefore be kept in a safe place for easy reference. The equipment must always be disconnected from the mains prior to undertaking any maintenance work. The safety instructions on the type plate of the components must be strictly observed.
Safe operation is only possible by the use of external constant-current sources.
Power supply units must be used for operation, in which the following protective measures are ensured:

- Short-circuit protection
- Overload protection
- Overheating protection
- SELV equiv. (Safety Extra Low Voltage)

Please ensure the correct polarity of the leads prior to commissioning. Reversed polarity can destroy the modules.

The maximum output of the power supply must be observed.

ESD (electrostatic discharge) protection measures must be observed when handling and installing the LED modules.

The modules are not protected against dust or moisture. When modules are operated in unduly moist or dusty environments, care must be taken to ensure each module is built into a protective casing in compliance with the correct IP classification or provided with corrosion protection. Damage caused by moisture and/or corrosion will not be recognised as a material or manufacturing defect.

Under no circumstances may LED modules ever be covered by insulation material or similar. Air ventilation must be ensured.

For optimal load of used constant-current driver the LEDSpots can only be connected in series. The quantity of LEDSpots is limited by the sum of forward voltage and the capacity of used constant-current driver. Under no circumstances may the sum of the forward bias exceed 60 V DC.

A parallel connection of the modules is not allowed.

Tests have shown the following chemicals to be harmful to LEDs used on the modules. It is recommended not to use the under-mentioned chemicals anywhere in an LED system. The fumes from even small amounts of these chemicals may damage the LEDs.

- Chemicals that might outgas aromatic hydrocarbons (e.g., toluene, benzene, xylene)
- Methyl acetate or ethyl acetate (i.e., nail polish remover)
- Cyanoacrylates (i.e., "Superglue")
- Glycol ethers
  (including Radio Shack®, Precision Electronics Cleaner – dipropylene glycol monomethyl ether)
- Formaldehyde or butadiene (including Ashland PLIOBOND® adhesive)
- Dymax 984-LVUF conformal coating
- Loctite Sumo glue
- Gorilla glue
- Clorox bleach
- Clorox Clean-Up cleaner spray
- Loctite 384 adhesive
- Loctite 7387 activator
- Loctite 242 threadlocker

Photobiological safety of lamps and lamp systems; German version EN 62471:2008 General lighting: exempt group

ELECTRONIC AND ELECTROMAGNETIC

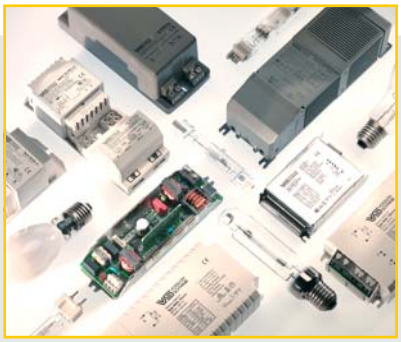



ELECTRONIC AND ELECTRO-MAGNETIC OPERATING DEVICES

For high-pressure sodium lamps (HS), metal halide lamps (HI) and mercury vapour lamps (HM)

Electronic ballasts
Modern discharge lamps operate very efficiently in combination with electronic ballasts. The numerous advantages of using electronic ballasts to operate high-pressure discharge lamps are listed in more detail on the product pages.

With the help of temperature and service-life tests, VS electronic ballasts guarantee a high degree of reliability. The quality of the electronic ballasts is ensured by continuous in-circuit tests and function tests like burn-in tests.

Magnetic ballasts
The electrical specifications of VS' range of ballasts comply with lamp-specific requirements. Vossloh-Schwabe attaches great importance to ensuring the impedance value of electromagnetic ballasts is kept within particularly narrow tolerances. This advantage, which is achieved by individual adjustment of the air gap during the automated production and testing process of every ballast, decisively contributes to optimising light output, light colour and service life of discharge lamps.

The range includes ballasts with variable voltage tapping points and varying degrees of inherent heating as well as encapsulated devices.

3 Ballasts for Discharge Lamps

For high-pressure sodium lamps (HS), metal halide lamps (HI) and mercury vapour lamps (HM)

Electronic ballasts, accessories	**102–111**
Dimmable electronic ballasts	110–111
Control gear units for HS and HI lamps	**112–118**
Electromagnetic ballasts	**119–141**
for HS and HI lamps	119–130
for HM and HI lamps	131–134
for SDW-T/-TF lamps	135
for power reduction	136–141
Technical details for discharge lamps	**184–225**
General technical details	533–540
Glossary	541–543

new

Compact Electronic Ballasts for HI Lamps 20 and 35 W

Shape: K35

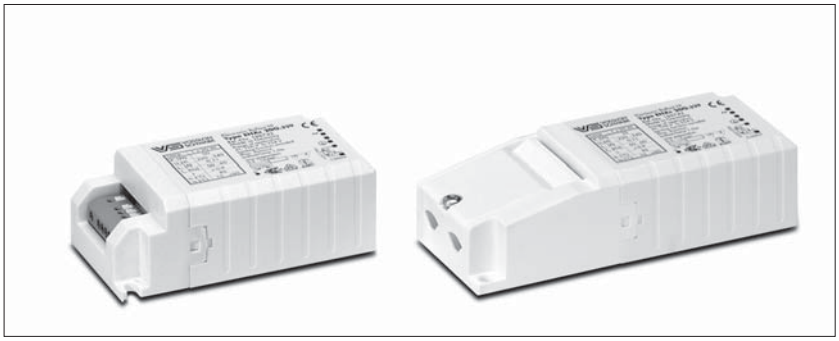

Casing: heat-resistant polyamide, encapsulated with polyurethane
(EHXc 35G.327 B and EHXc 35G.327 I)
For ceramic discharge tube lamps (C-HI)
Power factor: > 0.9
Operation frequency: 135 Hz
Push-in terminals: 0.5–1.5 mm²
Constant power consumption
Protection against "no load" operation
For luminaires of protection class I and II
Degree of protection: IP20
Permissible load capacity: 120 pF
RFI-suppressed
Fixing brackets for screws M4
for base mounting
No flickering of defective lamps

K35

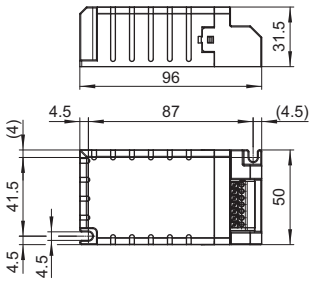

K35 with cord grip

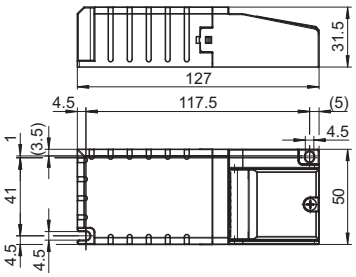

	Lamp				Electronic ballast									System
	Output W	Type	Base	Power consumption W	Type	**Ref. No.**	Voltage AC 50, 60 Hz V –10%+6%	Mains current A	Energy efficiency	Ambient temperature t_a (°C)	Casing temperature t_c (°C)	Ignition voltage kV	Weight g	Output W
	Electronic built-in ballasts													
new	20	HI	GU6.5, G8.5, GX8.5, GX10	1 x 20	EHXc 20.329 B	**188991**	220–240	0.11	A2	–15 to 60	max. 75	2–4	130	23
new	35	HI	GU6.5, G8.5, GX8.5, GX10, G12	1 x 39	EHXc 35G.327 B	**188993**	220–240	0.2	A2	–15 to 45	max. 80	2–4	180	43.5
	Independent electronic ballasts with cord grip													
new	20	HI	GU6.5, G8.5, GX8.5, GX10	1 x 20	EHXc 20.329 I	**188992**	220–240	0.11	A2	–15 to 60	max. 75	2–4	145	23
new	35	HI	GU6.5, G8.5, GX8.5, GX10, G12	1 x 39	EHXc 35G.327 I	**188994**	220–240	0.2	A2	–15 to 45	max. 80	2–4	195	43.5

Circuit diagrams see page 190

Electronic Ballasts for HI Lamps 35, 50 and 70 W

Shape: M3/K34

Casing: aluminium (M3),
heat-resistant polycarbonate (K34)
For ceramic discharge tube lamps (C-HI)
Power factor: ≥ 0.95
Ignition voltage: max. 5 kV
Operation frequency: 173 Hz
Push-in terminals with push-button: 0.75–2.5 mm²
Total harmonic distortion: < 10%
Temperature protection
Constant power consumption
Protection against "no load" operation
For luminaires of protection class I (metal casing)
For luminaires of protection class I and II (plastic casing)
Degree of protection: IP20
Permissible load capacity: 20–120 pF
RFI-suppressed
Fixing brackets for screws M4
for base mounting
No flickering of defective lamps

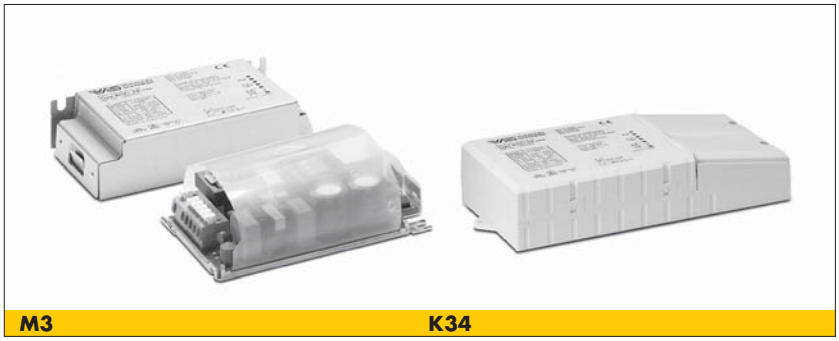

M3 K34

M3

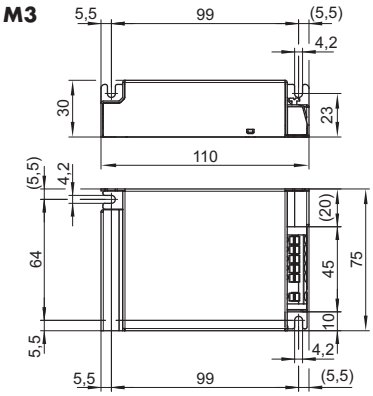

K34 with cord grip

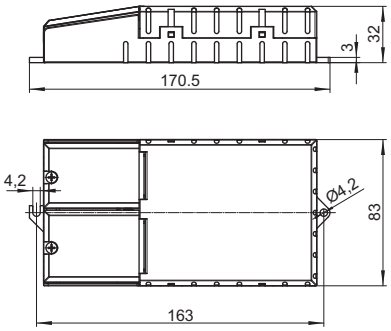

M3 built-in PCB

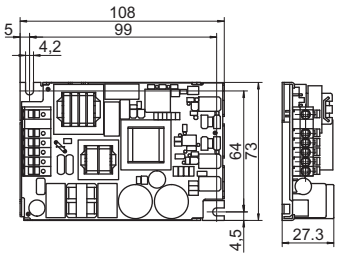

t_c point definition

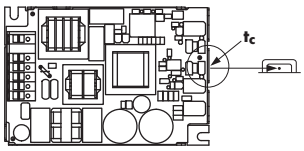

Lamp				Electronic ballast								System
Output W	Type	Base	Power consumption W	Type	**Ref. No.**	Voltage AC 50, 60 Hz V ±10%	Mains current A	Energy efficiency	Ambient temperature t_a (°C)	Casing temperature t_c (°C)	Weight g	Output W
Electronic built-in ballast (with cap)												
35	HI	GU6.5, G8.5, GU8.5, GX8.5, G12, E27	1 x 39	EHXc 35.325	**183033**	220 - 240	0.20-0.18	A2	-20 to 65	max. 80	220	43
new 50	HI	G8.5, G12	1 x 50	EHXc 50.358	**183028***	220 - 240	0.26-0.24	A2	-20 to 60	max. 80	220	55
70	HI	G8.5, GU8.5, GX8.5, G12, PG12-2, E27, RX7s	1 x 73	EHXc 70.326	**183036**	220 - 240	0.36-0.34	A2	-20 to 55	max. 80	220	80
Built-in PCB – Electronic built-in ballasts (without cap)												
35	HI	GU6.5, G8.5, GU8.5, GX8.5, G12, E27	1 x 39	EHXc 35.325	**183034**	220 - 240	0.20-0.18	A2	-20 to 65	max. 80	180	43
new 50	HI	G8.5, G12	1 x 50	EHXc 50.358	**183030***	220 - 240	0.26-0.24	A2	-20 to 60	max. 80	180	55
70	HI	G8.5, GU8.5, GX8.5, G12, PG12-2, E27, RX7s	1 x 73	EHXc 70.326	**183037**	220 - 240	0.36-0.34	A2	-20 to 55	max. 80	180	80
Independent electronic ballasts with cord grip												
35	HI	GU6.5, G8.5, GU8.5, GX8.5, G12, E27	1 x 39	EHXc 35.325	**183035**	220 - 240	0.20-0.18	A2	-20 to 65	max. 75	260	43
new 50	HI	G8.5, G12	1 x 50	EHXc 50.358	**183029***	220-240	0.26-0.24	A2	-20 to 60	max. 70	260	55
70	HI	G8.5, GU8.5, GX8.5, G12, PG12-2, E27, RX7s	1 x 73	EHXc 70.326	**183038**	220 - 240	0.36-0.34	A2	-20 to 55	max. 75	260	80

Circuit diagrams see page 190

* In development

new

Electronic Ballasts for HI Lamps 35 and 70 W

Shape: M3 EffectLine

Casing: heat-resistant polycarbonate
For ceramic discharge tube lamps (C-HI)
Power factor: ≥ 0.95
Ignition voltage: max. 5 kV
Operation frequency: 173 Hz
Push-in terminals with push-button: 0.5–1.5 mm²
Total harmonic distortion: < 10%
Temperature protection
Constant power consumption
Protection against "no load" operation
For luminaires of protection class I and II
Degree of protection: IP20
Permissible load capacity: 20–120 pF
RFI-suppressed
Life-time at $t_{c\ max.}$ = 30,000 hrs
Fixing brackets for screws M4
for base mounting

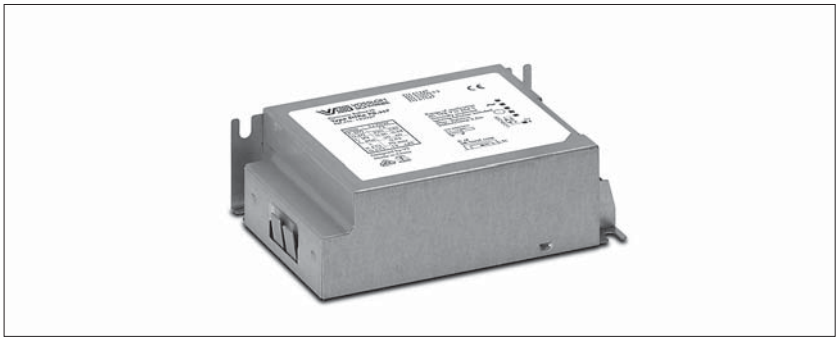

M3 EffectLine

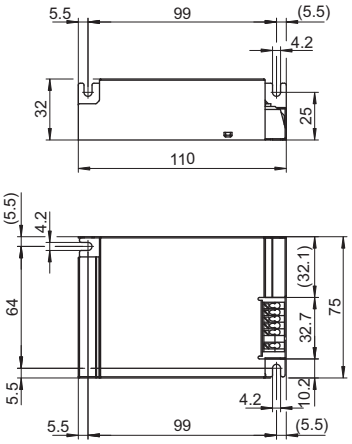

	Lamp				Electronic ballast								System
	Output W	Type	Base	Power consumption W	Type	**Ref. No.**	Voltage AC 50, 60 Hz V ±10%	Mains current A	Energy efficiency	Ambient temperature t_a (°C)	Casing temperature t_c (°C)	Weight g	Output W
new	35	HI	GU6.5, G8.5, GU8.5, GX8.5, G12, E27	1 x 39	EHXe 35.356	**183026***	220–240	0.20–0.18	A2	–15 to 65	max. 80	220	43
new	70	HI	G8.5, GU8.5, GX8.5, G12, PG12-2, E27, RX7s	1 x 73	EHXe 70.357	**183027***	220–240	0.36–0.34	A2	–15 to 50	max. 75	220	80

Circuit diagrams see page 190

* In development

Independent Electronic Ballasts for HI Lamps 35, 50 and 70 W

Shape: K36

Casing: heat-resistant polycarbonate
Easy connection by plug-in connector
primary: GST18 1-coded/black
with locking
secondary: ST18 0-coded
For ceramic discharge tube lamps (C-HI)
Power factor: 0.95
Ignition voltage: max. 5 kV
Operation frequency: 173 Hz
Total harmonic distortion: < 10%
Temperature protection
Constant power consumption
Protection against "no load" operation
For luminaires of protection class I and II
Degree of protection: IP20
Permissible load capacity: 20–120 pF
RFI-suppressed
Fixing brackets for screws M4
for base mounting



Additional technical features

The electronic ballast is protected against transient mains peaks up to 2.5 kV.

Overheating protection with VS thermal cut-out system with automatic reset which evaluates the temperature of the ballast.

At lamp operation voltage of > 120 V the electronic ballast will switch itself off.

K36

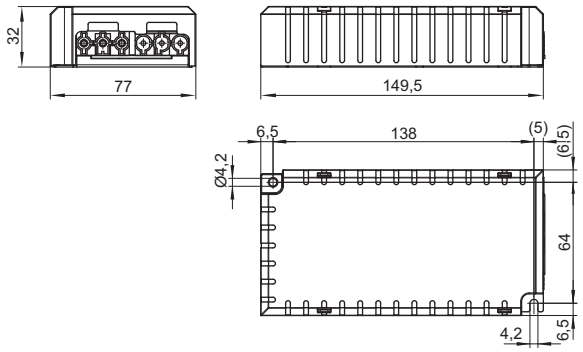

Lamp				Electronic ballast								System
Output W	Type	Base	Power consumption W	Type	**Ref. No.**	Voltage AC 50, 60 Hz V ±10%	Mains current A	Energy efficiency	Ambient temperature t_a (°C)	Casing temperature t_c (°C)	Weight g	Output W
35	HI	GU6.5, G8.5, GU8.5, GX8.5, G12, E27	1 x 39	EHXc 35.339	**188919**	220-240	0.20-0.18	A2	-20 to 55	max. 75	250	43
new 50	HI	G8.5, G12	1 x 50	EHXc 50.359	**183031***	220-240	0.26-0.24	A2	-20 to 55	max. 75	250	55
70	HI	G8.5, GU8.5, GX8.5, G12, PG12-2, E27, RX7s	1 x 73	EHXc 70.340	**188920**	220-240	0.36-0.34	A2	-20 to 50	max. 75	250	80

Circuit diagrams see page 190

* In development

Electronic Ballasts for HI Lamps 2 x 35 and 2 x 70 W

Shape: K32



Casing: heat-resistant polycarbonate
For ceramic discharge tube lamps (C-HI)
Power factor: 0.98
Ignition voltage: max. 5 kV
Operation frequency: 176 Hz
Push-in terminals with push-button: 0.75–2.5 mm²
Total harmonic distortion: < 10%
Temperature protection: a lamp is switched off in the event of overheating
Constant power consumption
Protection against "no load" operation
For luminaires of protection class I and II
Degree of protection: IP20
Permissible load capacity: 20–100 pF
RFI-suppressed
Fixing brackets for screws M4 for base mounting
Separate ignition channels enable independent lamp operation

K32

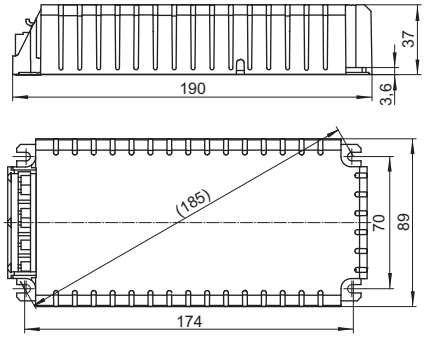

K32 with cord grip

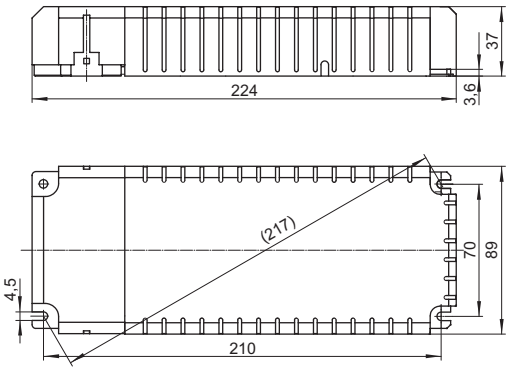

Lamp				Electronic ballast								System
Output W	Type	Base	Power consumption W	Type	**Ref. No.**	Voltage AC 50, 60 Hz V – 10%+6%	Mains current A	Energy-efficiency	Ambient temperature t_a (°C)	Casing temperature t_c (°C)	Weight g	Output W
Electronic built-in ballasts												
2x35	HI	GU6.5, G8.5, GU8.5, GX8.5, G12, E27	2 x 39	EHXc 235.316	**188223**	220–240	0.4–0.36	A2	-25 to 50	max. 80	405	86
2x70	HI	G8.5, GU8.5, GX8.5, G12, PG12-2, E27, RX7s	2 x 73	EHXc 270.317	**188224**	220–240	0.74–0.68	A2	-25 to 45	max. 80	440	160
Independent electronic ballasts with cord grip												
2x35	HI	GU6.5, G8.5, GU8.5, GX8.5, G12, E27	2 x 39	EHXc 235.316	**188455**	220–240	0.4–0.36	A2	-25 to 50	max. 80	455	86
2x70	HI	G8.5, GU8.5, GX8.5, G12, PG12-2, E27, RX7s	2 x 73	EHXc 270.317	**188456**	220–240	0.74–0.68	A2	-25 to 45	max. 80	490	160

Circuit diagrams see page190

Cord Grip for Electronic Built-in Ballasts

For shape K31 and K32

By using the cord grip electronic built-in ballasts for metal halide lamps become independent ballasts.
Material: heat-resistant polycarbonate
For use with electronic built-in ballasts with casing K31 and K32
For mains leads:
H03VV-F 3X0.75 or NYM 3X1.5 mm²
For lamp leads: SIHY-Cu 3X1 mm²
or SIHSI-Cu 3X1 mm²
Weight: 50 g
Unit: 20 pcs.
By turning the cable clamp by 180° the lead diameter can be reduced to 5 mm.
Ref. No.: 188080

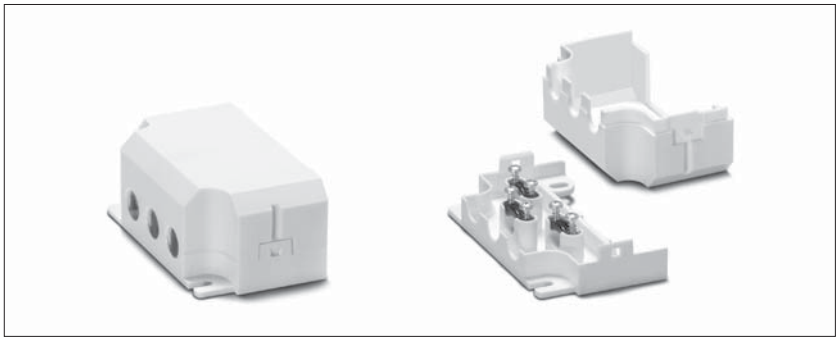

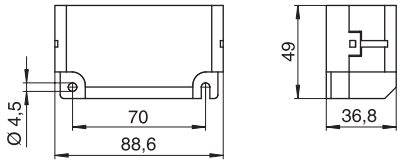

new

Electronic Ballasts for HI Lamps 100 and 150 W

Shape: M36/K31/K38

Casing: aluminium (M36),
heat-resistant polycarbonate (K31, K38)
For ceramic discharge tube lamps (C-HI)
Power factor: 0.98
Ignition voltage: max. 5 kV
Operation frequency: 170 Hz
Push-in terminals with push-button: 0.75–2.5 mm²
Total harmonic distortion: < 10%
Temperature protection
Constant power consumption
Protection against "no load" operation
For luminaires of protection class I and II
Degree of protection: IP20
Permissible load capacity: 20–240 pF
RFI-suppressed
Fixing brackets for screws M4
for base mounting

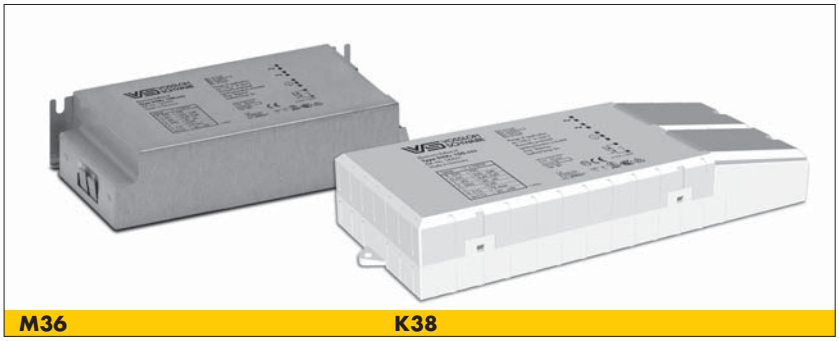

M36 **K38**



K31

M36

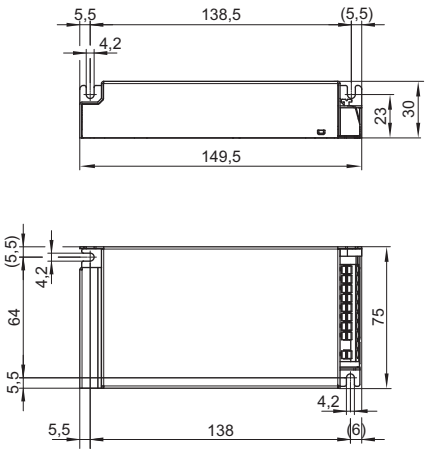

K38

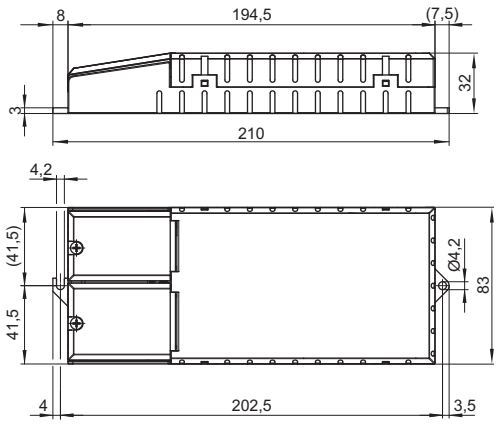

K31

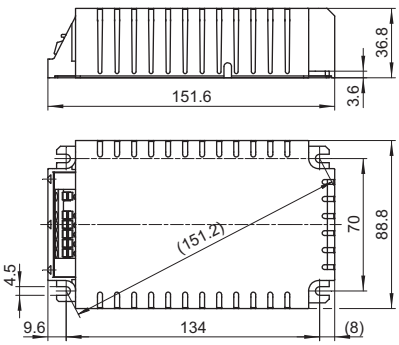

K31 with cord grip

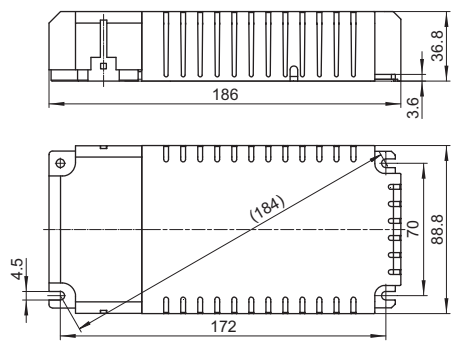

Electronic Ballasts for HI Lamps 100 and 150 W

Shape: M36 and K31, K38

	Lamp				Electronic ballast									System
	Output W	Type	Base	Power consumption W	Type	**Ref. No.**	Voltage AC 50, 60 Hz V ±10%	Mains current A	Energy efficiency	Ambient temperature t_a (°C)	Casing temperature t_c (°C)	Casing	Weight g	Output W
	Electronic built-in ballasts													
new	100	HI	G12, E40	1 x 100	EHXc 100.353	**183000***	220-240	0.49-0.45	A2	-20 to 50	max. 75	M36	306	108
	150	HI	G12, PGX12-2, E27, E40, RX7s	1 x 147	EHXc 150G.334	**183046**	220-240	0.73-0.67	A2	-20 to 45	max. 85	K31	540	160
	Independent electronic ballasts with cord grip													
new	100	HI	G12, E40	1 x 100	EHXc 100.353	**183001***	220-240	0.49-0.45	A2	-20 to 45	max. 75	K38	350	108
	150	HI	G12, PGX12-2, E27, E40, RX7s	1 x 147	EHXc 150G.334	**183047**	220-240	0.73-0.67	A2	-20 to 45	max. 85	K31	582	160

Circuit diagrams see page 190

* In development

new

Dimmable Electronic Built-in Ballasts for HI and HS Lamps 50–250 W

Shape: K40/K41 and M42

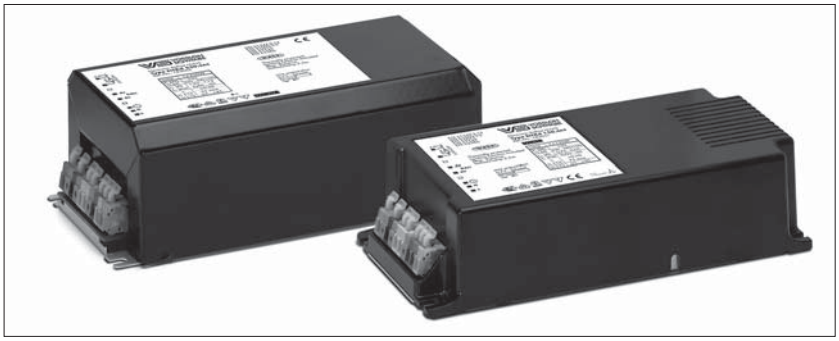

For dimmable metal halide lamps and dimmable high pressure sodium lamps
Casing: aluminium (M42), heat-resistant polycarbonate (K40/K41)
Dimming range: acc. to lamp specification
Communication protocols: DALI or MidNight
For use with open- or closed-loop control units
Suitable MidNight Controller 186240 (for installation in the distribution board) or 186241 (as a mobile controller) is available on request.
Power factor: > 0.98
Ignition voltage: max. 4.5 kV
Operation frequency: 81 Hz
Push-in terminals with push-button: 0,75–2,5 mm²
Total harmonic distortion: < 6%
Temperature protection
Constant power consumption
Protection against "no load" operation
For luminaires of protection class I and II
Degree of protection: IP20
Permissible load capacity: 250 pF
RFI-suppressed
Fixing brackets for screws M4 for base mounting
Compatible with IEC 62386 (DALI version)

K40/K41

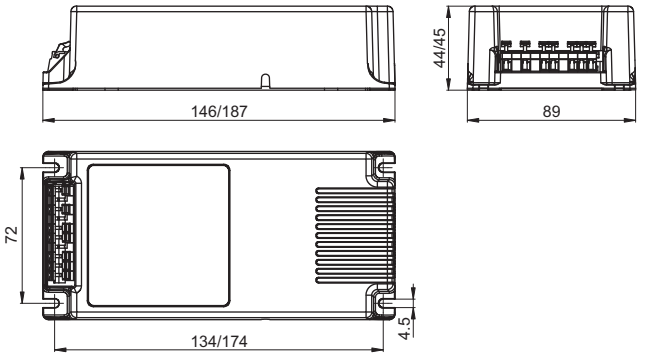

M42

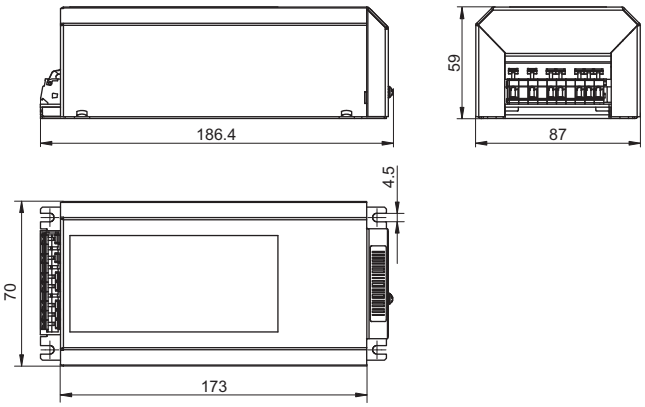

Lamp				Electronic ballast									System
Output W	Type	Base**	Power consumption W	Type	**Ref. No.**	Voltage AC 50, 60 Hz V ±10%	Mains current A	Energy-efficiency	Ambient temperature t_a (°C)	Casing temperature t_c (°C)	Casing	Weight g	Output W
DALI – Casing K40, K41 and M42													
new 50	HI/HS	G8.5, G12, E27	1 x 50	EHXd 50.360	**183048***	220–240	0.26–0.23	A2	–25 to 65	max. 80	K40	380	56
new 70	HI/HS	G8.5, GU8.5, GX8.5, G12, PG12-2, E27, RX7s	1 x 70	EHXd 70.361	**183049***	220–240	0.35–0.32	A2	–25 to 60	max. 80	K40	380	79
new 100	HI/HS	G12, E40	1 x 100	EHXd 100.362	**183050***	220–240	0.50–0.46	A2	–25 to 60	max. 75	K41	520	107
new 150	HI/HS	G12, G22, PGX12-2, Fc2, E27, E40, RX7s	1 x 150	EHXd 150.363	**183051***	220–240	0.75–0.69	A2	–25 to 50	max. 75	K41	520	161
new 250	HI/HS	Fc2, E40, RX7s	1 x 250	EHXd 250.364	**183052***	220–240	1.22–1.12	A2	–25 to 45	max. 65	M42	930	267
MidNight – Casing K40, K41 and M42													
new 50	HI/HS	G8.5, G12, E27	1 x 50	EHXd 50.365 M	**183053***	220–240	0.26–0.23	A2	–25 to 65	max. 80	K40	380	56
new 70	HI/HS	G8.5, GU8.5, GX8.5, G12, PG12-2, E27, RX7s	1 x 70	EHXd 70.366 M	**183054***	220–240	0.35–0.32	A2	–25 to 60	max. 80	K40	380	79
new 100	HI/HS	G12, E40	1 x 100	EHXd 100.367 M	**183055***	220–240	0.50–0.46	A2	–25 to 60	max. 75	K41	520	107
new 150	HI/HS	G12, G22, PGX12-2, Fc2, E27, E40, RX7s	1 x 150	EHXd 150.368 M	**183056***	220–240	0.75–0.69	A2	–25 to 50	max. 75	K41	520	161
new 250	HI/HS	Fc2, E40, RX7s	1 x 250	EHXd 250.369 M	**183057***	220–240	1.22–1.12	A2	–25 to 45	max. 65	M42	930	267

Circuit diagrams see page 190

* In development | ** Please ensure that lamps are only dimmed if specified as "dimmable" by the manufacturer.

Dimmable Electronic Built-in Ballasts IP65 for HI and HS Lamps 50–250 W

Shape: M43/M44 and M45



For dimmable metal halide lamps and dimmable high pressure sodium lamps
Casing: aluminium
Dimming range: acc. to lamp specification
Communication protocols: DALI or MidNight
For use with open- or closed-loop control units
Suitable MidNight Controller 186240 (for installation in the distribution board) or 186241 (as a mobile controller) is available on request.
Power factor: > 0.98
Ignition voltage: max. 4.5 kV
Operation frequency: 81 Hz
Leads: Mains: H05VV-F 3X1.5 mm²
DALI: YSLY-0Z 2X0.75 mm²
Lamp: X-SIHF 2X1.5 mm²
Lead lengths: 60 cm
Total harmonic distortion: < 6%
Temperature protection
Constant power consumption
Protection against "no load" operation
For luminaires of protection class I and II
Degree of protection: IP65
Permissible load capacity: 250 pF
RFI-suppressed
Fixing brackets for screws M4 for base mounting
Compatible with IEC 62386 (DALI version)

M43/M44

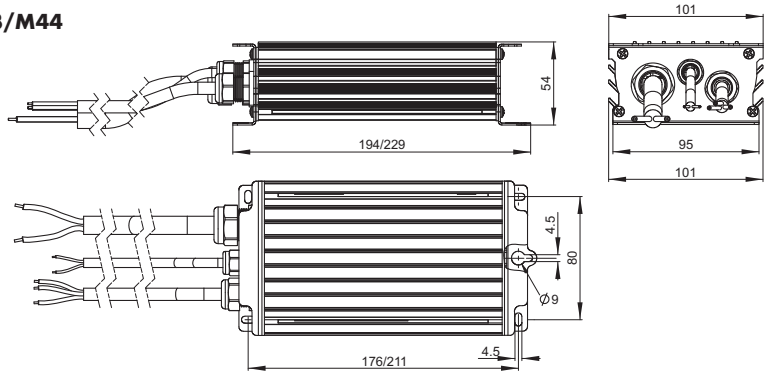

M45

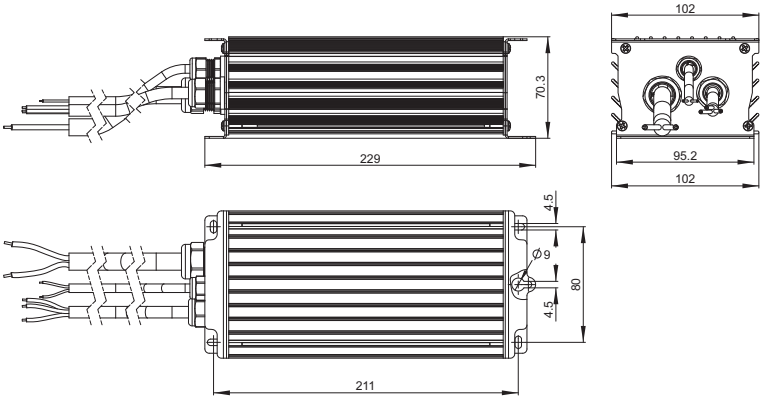

Lamp				Electronic ballast									System
Output W	Type	Base**	Power consumption W	Type	**Ref. No.**	Voltage AC 50, 60 Hz V ±10%	Mains current A	Energy-efficiency	Ambient temperature t_a (°C)	Casing temperature t_c (°C)	Casing	Weight g	Output W
DALI – Casing M43, M44 and M45													
new 50	HI/HS	G8.5, G12, E27	1 x 50	EHXd 50.360	**183060***	220-240	0.26-0.23	A2	-25 to 65	max. 80	M43	1000	56
new 70	HI/HS	G8.5, GU8.5, GX8.5, G12, PG12-2, E27, RX7s	1 x 70	EHXd 70.361	**183061***	220-240	0.35-0.32	A2	-25 to 60	max. 80	M43	1000	79
new 100	HI/HS	G12, E40	1 x 100	EHXd 100.362	**183062***	220-240	0.50-0.46	A2	-25 to 60	max. 75	M44	1200	107
new 150	HI/HS	G12, G22, PGX12-2, Fc2, E27, E40, RX7s	1 x 150	EHXd 150.363	**183063***	220-240	0.75-0.69	A2	-25 to 50	max. 75	M44	1200	161
new 250	HI/HS	Fc2, E40, RX7s	1 x 250	EHXd 250.364	**183064***	220-240	1.22-1.12	A2	-25 to 50	max. 65	M45	1500	267
MidNight – Casing M43, M44 and M45													
new 50	HI/HS	G8.5, G12	1 x 50	EHXd 50.365 M	**183065***	220-240	0.26-0.23	A2	-25 to 65	max. 80	M43	1000	56
new 70	HI/HS	G8.5, GU8.5, GX8.5, G12, PG12-2, E27, RX7s	1 x 70	EHXd 70.366 M	**183066***	220-240	0.35-0.32	A2	-25 to 60	max. 80	M43	1000	79
new 100	HI/HS	G8.5, G12, E27	1 x 100	EHXd 100.367 M	**183067***	220-240	0.50-0.46	A2	-25 to 60	max. 75	M44	1200	107
new 150	HI/HS	G12, G22, PGX12-2, Fc2, E27, E40, RX7s	1 x 150	EHXd 150.368 M	**183068***	220-240	0.75-0.69	A2	-25 to 50	max. 75	M44	1200	161
new 250	HI/HS	Fc2, E40, RX7s	1 x 250	EHXd 250.369 M	**183069***	220-240	1.22-1.12	A2	-25 to 50	max. 65	M45	1500	267

Circuit diagrams see page 190

* In development | ** Please ensure that lamps are only dimmed if specified as "dimmable" by the manufacturer.

Control Gear Units for HS and HI Lamps 35 to 150 W



Compact plastic casing
Shape: 64 x 72 mm

For high pressure sodium lamps (HS),
metal halide lamps (HI)
and ceramic discharge lamps (C-HI)
Compact control gear unit with ballast with patented, intelligent thermal cut-out with automatic reset (which evaluates the temperature and current of the ballast), digital timer ignitor with IPP^{++} technology and compensation capacitor with thermal fuse
As individual components no longer need to be wired, there is a significant reduction in assembly time and costs.

Protection class II
Degree of protection: IP40
Permissible load capacity: 20–1000 pF
Lead length to the lamp: max. 10 m
tw 130
Push-in terminals: 0.5–2.5 mm²
Cord grips for mains and lamp leads
Further outputs and voltages on request

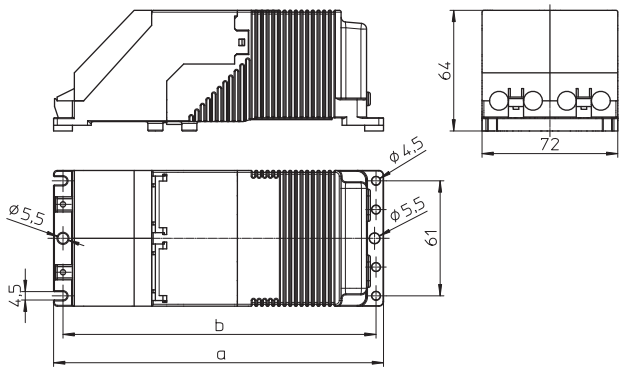

Lamp			Control gear unit									
Output W	Type	Current A	Type	**Ref. No.**	Voltage AC V, Hz	Mains current A	a mm	b mm	Weight kg	t_a °C	Power factor λ	Energy efficiency*
230 V, 50 Hz												
35	HS, HI	0.53	VNaHJ 35PZTG.568	**536199**	230, 50	0.210	175	166	1.32	55	0.92	EEI=A3
70	HS, HI	0.98	VNaHJ 70PZTG.566	**535657**	230, 50	0.380	175	166	1.32	45	0.91	EEI=A3
100	HS, HI	1.20	VNaHJ 100PZTG.571	**536200**	230, 50	0.560	214	205	1.85	45	0.85	EEI=A3
150	HS, HI	1.80	VNaHJ 150PZTG.567	**535695**	230, 50	0.720	214	205	2.25	45	0.91	EEI=A3
240 V, 50 Hz												
35	HS, HI	0.53	VNaHJ 35PZTG.568	**536201**	240, 50	0.210	175	166	1.32	55	0.94	EEI=A3
70	HS, HI	0.98	VNaHJ 70PZTG.566	**536202**	240, 50	0.370	175	166	1.32	40	0.94	EEI=A3
100	HS, HI	1.20	VNaHJ 100PZTG.571	**536203**	240, 50	0.560	214	205	1.85	40	0.86	EEI=A3
150	HS, HI	1.80	VNaHJ 150PZTG.567	**536204**	240, 50	0.730	214	205	2.25	40	0.91	EEI=A3
220 V, 60 Hz												
35	HS, HI	0.53	VNaHJ 35PZTG.574	**536205**	220, 60	0.220	175	166	1.32	60	0.98	EEI=A3
70	HS, HI	0.98	VNaHJ 70PZTG.575	**536207**	220, 60	0.370	175	166	1.32	50	0.97	EEI=A3
150	HS, HI	1.80	VNaHJ 150PZTG.576	**536209**	220, 60	0.800	214	205	2.25	45	0.98	EEI=A3

* Step 2: EEI = A3, minimum EU energy efficiency requirements as of 2012 | Step 3: A2, minimum EU energy efficiency requirements as of 2017

Control Gear Units for HS and HI Lamps 35 to 150 W



Compact plastic casing with integrated GST18 connector (red)
Shape: 64 x 72 mm

For high pressure sodium lamps (HS),
metal halide lamps (HI)
and ceramic discharge lamps (C-HI)
Compact control gear unit with ballast with patented, intelligent thermal cut-out with automatic reset (which evaluates the temperature and current of the ballast), digital timer ignitor with IPP^{++} technology and compensation capacitor
With integrated GST18 connector
As individual components no longer need to be wired, there is a significant reduction in assembly time and costs.
Protection class II
Degree of protection: IP40
Permissible load capacity: 20–1000 pF
Lead length to the lamp: max. 10 m
tw 130
Push-in terminals: 0.5 – 2.5 mm^2
Cord grip for mains lead
Further outputs and voltages on request

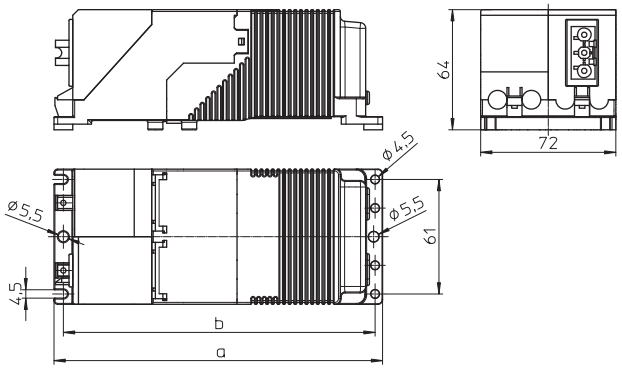

Lamp			Control gear unit									
Output W	Type	Current A	Type	**Ref. No.**	Voltage AC V, Hz	Mains current A	a mm	b mm	Weight kg	t_a °C	Power factor λ	Energy efficiency*
230 V, 50 Hz												
35	HS, HI	0.53	VNaHJ 35PZTG.568	**536210**	230, 50	0.210	175	166	1.32	55	0.92	EEI=A3
70	HS, HI	0.98	VNaHJ 70PZTG.566	**536211**	230, 50	0.380	175	166	1.32	45	0.91	EEI=A3
150	HS, HI	1.80	VNaHJ 150PZTG.567	**536213**	230, 50	0.720	214	205	2.25	45	0.91	EEI=A3
240 V, 50 Hz												
35	HS, HI	0.53	VNaHJ 35PZTG.568	**536214**	240, 50	0.210	175	166	1.32	55	0.94	EEI=A3
70	HS, HI	0.98	VNaHJ 70PZTG.566	**536215**	240, 50	0.370	175	166	1.32	40	0.94	EEI=A3
150	HS, HI	1.80	VNaHJ 150PZTG.567	**536216**	240, 50	0.730	214	205	2.25	40	0.91	EEI=A3
220 V, 60 Hz												
35	HS, HI	0.53	VNaHJ 35PZTG.574	**536217**	220, 60	0.220	175	166	1.32	60	0.98	EEI=A3
70	HS, HI	0.98	VNaHJ 70PZTG.575	**536218**	220, 60	0.370	175	166	1.32	50	0.97	EEI=A3
150	HS, HI	1.80	VNaHJ 150PZTG.576	**536219**	220, 60	0.800	214	205	2.25	45	0.98	EEI=A3

* Step 2: EEI = A3, minimum EU energy efficiency requirements as of 2012 | Step 3: A2, minimum EU energy efficiency requirements as of 2017

Control Gear Units IP65 for HS and HI Lamps 35 to 150 W

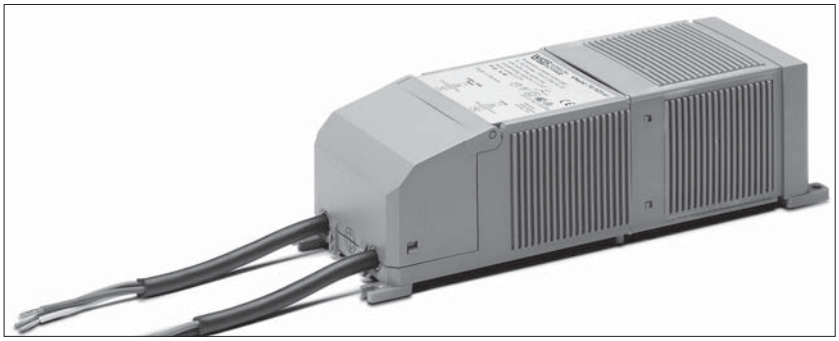

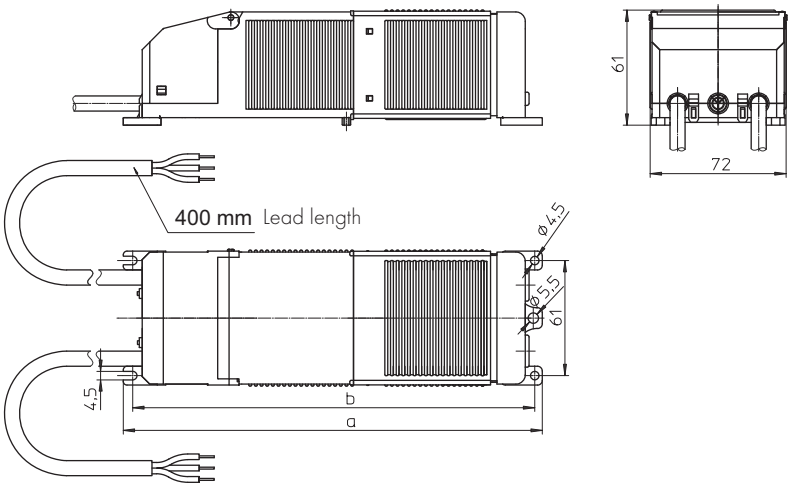

Encapsulated unit in compact plastic casing
Shape: 61x72 mm

For high pressure sodium lamps (HS), metal halide lamps (HI) and ceramic discharge lamps (C-HI)
Compact control gear unit with ballast with patented, intelligent thermal cut-out with automatic reset (which evaluates the temperature and current of the ballast), digital timer ignitor with IPP++ technology and compensation capacitor with thermal fuse
As individual components no longer need to be wired, there is a significant reduction in assembly time and costs.

Protection class II
Degree of protection: IP65
Permissible load capacity: 20–1000 pF
Lead length to the lamp: max. 10 m
tw 130

Lamp			Control gear unit									
Output W	Type	Current A	Type	**Ref. No.**	Voltage V, Hz	Mains current A	a mm	b mm	Weight kg	t_a °C	Power factor λ	Energy efficiency*
230 V, 50 Hz												
35	HS, HI	0.53	VNaHJ 35PZTG.050	**533391**	230, 50	0.240	222	214	1.95	60	0.96	EEI=A3
50	HS	0.76	VNaH 50PZTG.058	**543733**	230, 50	0.290	222	214	1.95	60	0.94	EEI=A3
70	HS, HI	0.98	VNaHJ 70PZTG.051	**533392**	230, 50	0.370	222	214	1.95	50	0.97	EEI=A3
100	HS, HI	1.20	VNaHJ 100PZTG.078	**533393**	230, 50	0.560	249	240	2.25	55	0.90	EEI=A3
150	HS, HI	1.80	VNaHJ 150PZTG.052	**533394**	230, 50	0.740	249	240	2.75	50	0.94	EEI=A3
240 V, 50 Hz												
35	HS, HI	0.53	VNaHJ 35PZTG.053	**534107**	240, 50	0.240	222	214	1.95	60	0.96	EEI=A3
70	HS, HI	0.98	VNaHJ 70PZTG.054	**534109**	240, 50	0.370	222	214	1.95	50	0.97	EEI=A3
150	HS, HI	1.80	VNaHJ 150PZTG.055	**534115**	240, 50	0.730	249	240	2.75	50	0.95	EEI=A3
220 V, 60 Hz												
35	HS, HI	0.53	VNaHJ 35PZTG.041	**534122**	220, 60	0.220	222	214	1.95	70	0.98	EEI=A3
70	HS, HI	0.98	VNaHJ 70PZTG.067	**534111**	220, 60	0.370	222	214	1.95	50	0.97	EEI=A3
150	HS, HI	1.80	VNaHJ 150PZTG.068	**534117**	220, 60	0.800	249	240	2.25	45	0.98	EEI=A3

* Step 2: EEI = A3, minimum EU energy efficiency requirements as of 2012 | Step 3: A2, minimum EU energy efficiency requirements as of 2017

Control Gear Units for HS and HI Lamps 250 and 400 W



Shape: 76 x 91 mm

For high pressure sodium lamps (HS),
metal halide lamps (HI) and
ceramic discharge lamps (C-HI)
Fully wired slim, weather-proof control gear unit
with ballast with thermal cut-out with automatic reset,
capacitor, timer ignitor and connection terminal
Suitable for installation in or on pylons
Frontal cable feed using a PG thread fitting
Front access to terminals
Screw-fixed end cap
Screw terminals: 0.75–2.5 mm²
For luminaires of protection class I
Degree of protection: IP54
Permissible load capacity: 20–1000 pF
Distance to the lamp: max. 10 m
tw 130
With connection for protective earth conductor

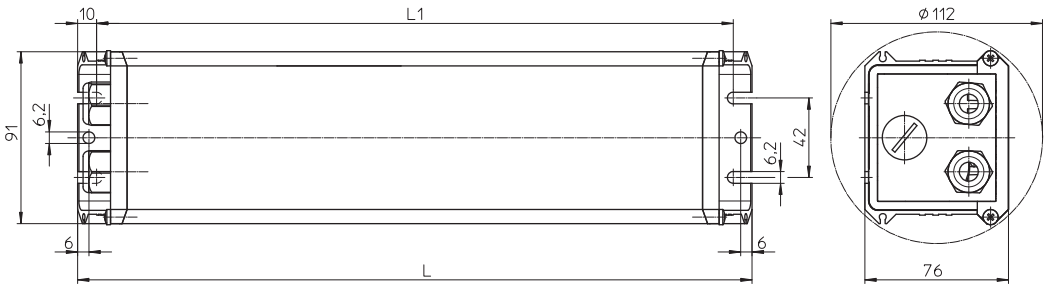

Lamp				Control gear unit							
Output W	Type	Current A	Mains current A	Type	**Ref. No.**	Voltage AC V, Hz	L mm	L1 mm	Weight kg	Power factor λ	Energy efficiency*
250	HS, HI	3.0	1.3	VNaHJ 250PZT.745	**531476**	230, 50	322	302	4.30	> 0.94	A2
400	HS, HI	4.45	2.0	VNaHJ 400PZT.743	**531475**	230, 50	357	337	5.62	> 0.91	A2

* Step 2: EEI = A3, minimum EU energy efficiency requirements as of 2012 | Step 3: A2, minimum EU energy efficiency requirements as of 2017

new

Ballast Units for HS and HI Lamps 600 to 2000 W

Shape: 114x116 mm



For high-pressure sodium vapour lamps (HS) and metal halide lamps (HI)
Slim, weather-proof ballast unit fully wired with ballast, capacitor and connection terminal
Suitable for installation in or on pylons
With connection for protective earth conductor
Frontal cable feed using a PG thread fitting
Front access to terminals or fuses
Optional additional third PG connection for mains feed-through wiring
Screw-fixed end cap
Diverse mounting options using an assembly plate or rail
Screw terminals: 0.75–10 mm²
For luminaires of protection class I
tw 130

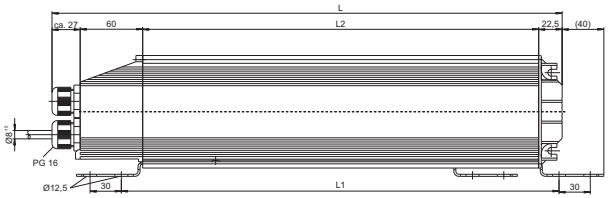

Degree of protection: IP54

Lamp				Ballast unit								
Output W	Type	Current A	Mains current A	Type	**Ref. No.**	Voltage AC V, Hz	L mm	L1 mm	L2 mm	Weight kg	Power factor λ	Energy efficiency*
600	HS	6.2	3.1	VNaH 600.02	**531182**	230 - 240, 50	452	375	335	9.6	> 0.90	A2
1000	HS	10.3	5.0	VNaHJ 1000.61	**531472**	230 - 240, 50	487	410	370	11.6	> 0.90	A2
	HI	9.5	4.9									A2
2000	HI	8.8	5.7	VJ 2000.05	**531193**	380 - 400, 50	570	500	460	15.2	> 0.90	A2
2000	HI	10.3	6.0	VJD 2000.63	**531474**	380 - 400, 50	627	550	510	20.2	> 0.90	A2

* Step 2: EEI = A3, minimum EU energy efficiency requirements as of 2012 | Step 3: A2, minimum EU energy efficiency requirements as of 2017

Degree of protection: IP65

Fully encapsulated ballast unit with leads

	Lamp				Ballast unit								
	Output W	Type	Current A	Mains current A	Type	**Ref. No.**	Voltage AC V, Hz	L mm	L1 mm	L2 mm	Weight kg	Power factor λ	Energy efficiency*
new	1000	HS	10.3	5.0	VNaHJ 1000.61	**531480**	220, 50	487	410	370	11.6	> 0.90	A2
		HI	9.5	4.9									A2
new	2000	HI	10.3	6.0	VJD 2000.63	**531481**	380, 50	627	550	510	20.2	> 0.90	A2

* Step 2: EEI = A3, minimum EU energy efficiency requirements as of 2012 | Step 3: A2, minimum EU energy efficiency requirements as of 2017

Compact Assembly Kits for HS and HI Lamps 35 to 150 W

Ballast shape: 53 x 66 mm

For high pressure sodium lamps (HS),
metal halide lamps (HI)
and ceramic discharge lamps (C-HI)
Compact assembly kit with ballast with or without patented, intelligent thermal cut-out with automatic reset (which evaluates the temperature and current of the ballast), superimposed ignitor and compensation capacitor
With luminaire terminal block:
screw terminal 0.75–2.5 mm²
With earth terminal
Permissible load capacity: 20–100 pF
Lead length to the lamp: max. 1.5 m
tw 130
On request:
Further outputs and voltages
With digital timer ignitor
For pulse ignition system

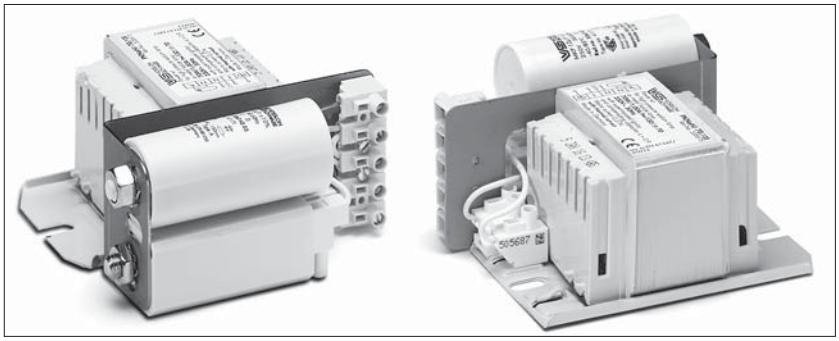

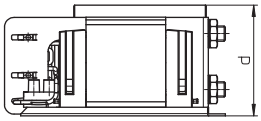

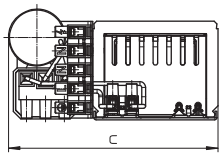

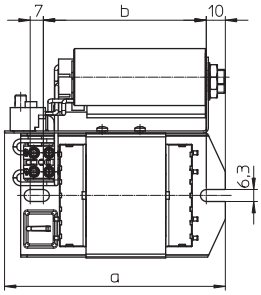

As individual components no longer need to be wired, there is a significant reduction in assembly time and costs.

Especially suitable for change of lamp technology from HM to HS.

	Lamp			Assembly kit											
	Output W	Type	Current A	Type	**Ref. No.**	Voltage AC V, Hz	Mains current A	Temperature protection	a mm	b mm	c mm	d mm	Weight kg	Power factor λ	Energy efficiency*
	230 V, 50 Hz														
new	35	HS, HI	0.53	PKNaHJ 35.008	**546797**	230, 50	0.22	yes	117	86	108	54	1.2	> 0.90	EEI=A3
	50	HS	0.76	PKNaH 50PZT.992	**543378**	230, 50	0.30	yes	117	86	111	59	1.4	> 0.90	EEI=A3
	70	HS, HI	0.98	PKNaHJ 70.128	**538675**	230, 50	0.37	yes	117	86	111	59	1.4	> 0.90	EEI=A3
					538685			no							EEI=A3
	100	HS, HI	1.20	PKNaHJ 100.941	**538676**	230, 50	0.56	yes	117	86	111	59	1.6	> 0.90	EEI=A3
					538686			no							EEI=A3
	150	HS, HI	1.80	PKNaHJ 150.620	**538677**	230, 50	0.74	yes	151	120	115	63	2.2	> 0.90	EEI=A3
					538687			no							EEI=A3
	220 V, 60 Hz														
new	35	HS, HI	0.53	PKNaHJ 35.008	**547285**	220, 60	0.23	yes	117	86	108	54	1.2	> 0.90	EEI=A3
					543401			no							
new	70	HS, HI	0.98	PKNaHJ 70.653	**547287**	220, 60	0.37	yes	117	86	111	59	1.4	> 0.90	EEI=A3
					538680			no							
	100	HS, HI	1.20	PKNaHJ 100.271	**538681**	220, 60	0.56	no	117	86	111	59	1.6	> 0.90	EEI=A3
	150	HS, HI	1.80	PKNaHJ 150.679	**538682**	220, 60	0.74	no	151	120	115	63	2.2	> 0.90	EEI=A3
	220/240 V, 60 Hz														
	100	HS, HI	1.20	PKNaHJ 100.345	**543295**	220/240, 60	0.60	no	117	86	111	60	1.6	> 0.90	EEI=A3
	150	HS, HI	1.80	PKNaHJ 150.301	**543299**	220/240, 60	0.80	no	151	120	115	63	2.2	> 0.90	EEI=A3

* Step 2: EEI = A3, minimum EU energy efficiency requirements as of 2012 | Step 3: A2, minimum EU energy efficiency requirements as of 2017

Compact Assembly Kits for HS and HI Lamps 250 and 400 W

Ballast shape: 71x75 mm

For high pressure sodium lamps (HS),
metal halide lamps (HI)
and ceramic discharge lamps (C-HI)
Compact assembly kit with ballast with or without thermal cut-out with automatic reset, superimposed ignitor and compensation capacitor
With luminaire terminal block:
- screw terminal 0.75–2.5 mm²

With earth terminal
Permissible load capacity: 20–100 pF
Lead length to the lamp: max. 1.5 m
tw 130
On request:
- Further outputs and voltages
- With digital timer ignitor
- For pulse ignition system

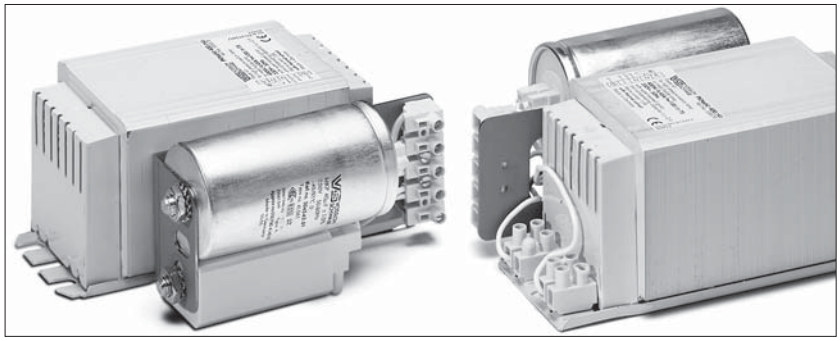

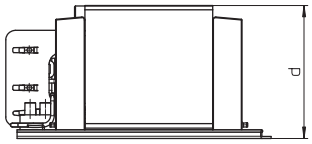

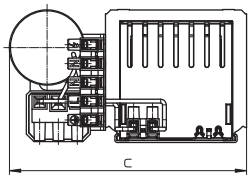

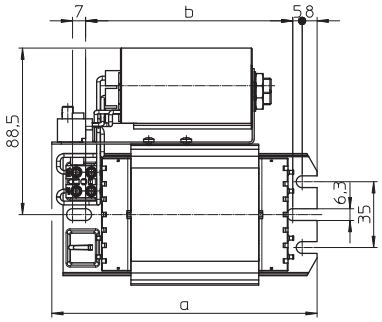

As individual components no longer need to be wired, there is a significant reduction in assembly time and costs.

Especially suitable for change of lamp technology from HM to HS.

Lamp			Assembly kit											
Output W	Type	Current A	Type	**Ref. No.**	Voltage AC V, Hz	Mains current A	Temperature protection	a mm	b mm	c mm	d mm	Weight kg kg	Power factor λ	Energy efficiency*
230 V, 50 Hz														
250	HS, HI	3.00	PKNaHJ 250.741	**538678**	230, 50	1.20	yes	141	110	128	73	3.2	> 0.90	A2
				538688			no							A2
400	HS, HI	4.45	PKNaHJ 400.743	**538679**	230, 50	1.80	yes	171	140	129	73	5.2	> 0.90	A2
				538689			no							A2
220 V, 60 Hz														
250	HS, HI	3.00	PKNaHJ 250.742	**538683**	220, 60	1.20	no	141	110	126	71	3.2	> 0.90	A2
400	HS, HI	4.45	PKNaHJ 400.744	**538684**	220, 60	1.80	no	171	140	129	71	5.2	> 0.90	A2

* Step 2: EEI = A3, minimum EU energy efficiency requirements as of 2012 | Step 3: A2, minimum EU energy efficiency requirements as of 2017

Standard Ballasts for HS and HI Lamps 35 to 70 W

Shape: 53 x 66 mm

For high pressure sodium lamps (HS),
metal halide lamps (HI) and
ceramic discharge lamps (C-HI)
Vacuum-impregnated with polyester resin
Screw terminals: 0.5–2.5 mm²
Protection class I
tw 130
Ballasts for pulse ignition system on request

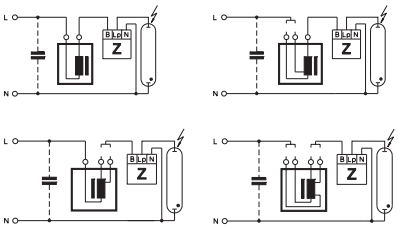

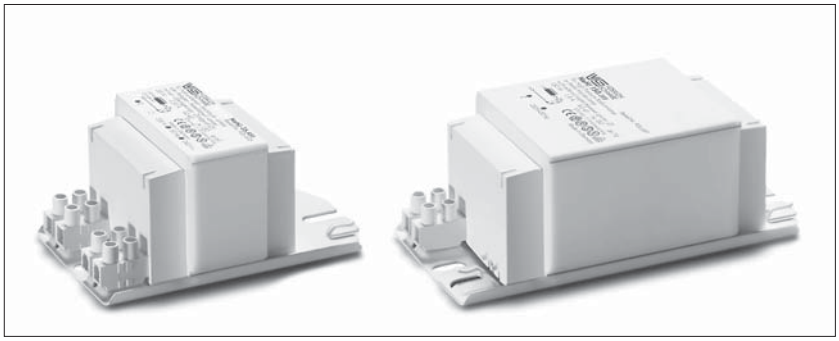

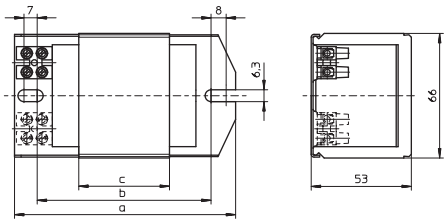

Lamp			Ballast										Capacitor	
Output W	Type	Current A	Type	**Ref. No.**	Voltage AC V, Hz	a mm	b mm	c mm	Weight kg	Δt K	Power factor λ	Energy efficiency*	C_P µF	I_N A
35	HS, HI	0.53	NaHJ 35.485	**526517**	220/230, 50	108	86	28	0.91	60	0.40	EEI=A3	6	0.22/0.21
35	HS, HI	0.53	NaHJ 35.485	**161367**	230/240, 50	108	86	28	0.91	60	0.40	EEI=A3	6	0.22/0.21
35	HS, HI	0.53	NaHJ 35.638	**161371**	220, 60	108	86	28	0.91	50	0.41	EEI=A3	5	0.23
50	HS	0.76	NaH 50.486	**161379**	230/240, 50	108	86	36	1.07	65	0.37	EEI=A3	8	0.30/0.29
50	HS	0.76	NaH 50.654	**161399**	220, 60	108	86	28	0.91	60	0.36	EEI=A3	8	0.31
50	HS	0.76	NaHJ 70/50.157	**160613**	230, 50	108	86	42	1.23	55	0.37	EEI=A3	8	0.30
70	HS, HI	0.98								70	0.37	EEI=A3	12	0.38
70	HS, HI	0.98	NaHJ 70.300	**174961**	220, 50	108	86	36	1.07	75	0.40	EEI=A3	12	0.40
70	HS, HI	0.98	NaHJ 70.128	**533568**	230, 50	108	86	36	1.07	70	0.36	EEI=A3	12	0.38
new 70	HS, HI	0.98	NaHJ 70.228	**547860**	230, 50	108	86	36	1.07	75	0.36	EEI=A3	12	0.38
70	HS, HI	0.98	NaHJ 70.128	**539434**	230/240, 50	108	86	36	1.07	70/75	0.36	EEI=A3	12	0.38/0.37
70	HS, HI	0.98	NaHJ 70.158	**161662**	240, 50	108	86	42	1.23	70	0.36	EEI=A3	12	0.37
70	HS, HI	0.98	NaHJ 70.128	**538407**	240, 50	108	86	36	1.07	75	0.37	EEI=A3	12	0.37
70	HS, HI	0.98	NaHJ 70.653	**161392**	220, 60	108	86	36	1.07	60	0.42	EEI=A3	10	0.40

* Step 2: EEI = A3, minimum EU energy efficiency requirements as of 2012 | Step 3: A2, minimum EU energy efficiency requirements as of 2017

Standard Ballasts for HS and HI Lamps 70 to 250 W

Shape: 53 x 66 mm

Lamp			Ballast										Capacitor	
Output W	Type	Current A	Type	**Ref. No.**	Voltage AC V, Hz	a mm	b mm	c mm	Weight kg	Δt K	Power factor λ	Energy efficiency*	C_P µF	I_N A
70	HS, HI	0.98	NaHJ 100/70.703	**161469**	230, 50	145	120	55	1.55	60	0.37	EEI=A3	12	0.38
100	HS, HI	1.20								70	0.43	EEI=A3	12	0.55
70	HS, HI	0.98	NaHJ 100/70.519	**161158**	230/240, 50	145	120	75	2.03	50	0.36	A2	12	0.38/0.37
100	HS, HI	1.20								60	0.42	EEI=A3	12	0.55/0.53
70	HS, HI	0.98	NaHJ 100/70.709	**161471**	220, 60	145	120	55	1.55	50	0.39	EEI=A3	10	0.40
100	HS, HI	1.20								60	0.44	EEI=A3	10	0.57
100	HS, HI	1.20	NaHJ 100.126	**507671**	220, 50	108	86	42	1.24	75	0.44	EEI=A3	12	0.55
100	HS, HI	1.20	NaHJ 100.941	**161707**	230/240, 50	108	86	42	1.24	75/80	0.42	EEI=A3	12	0.55/0.53
100	HS, HI	1.20	NaHJ 100.271	**530195**	220, 60	108	86	42	1.24	75	0.45	EEI=A3	10	0.57
100	HS, HI	1.20	NaHJ 150/100.973	**169591**	230, 50	145	120	75	2.03	55	0.41	A2	12	0.55
150	HS, HI	1.80								75	0.41	EEI=A3	20	0.77
150	HS, HI	1.80	NaHJ 150.159	**533602**	220, 50	145	120	64	1.80	75	0.41	EEI=A3	20	0.80
150	HS, HI	1.80	NaHJ 150.620	**533565**	230, 50	145	120	64	1.80	70	0.40	EEI=A3	20	0.77
150	HS, HI	1.80	NaHJ 150.620	**534540**	240, 50	145	120	64	1.80	75	0.40	EEI=A3	20	0.74
150	HS, HI	1.80	NaHJ 150.679	**526196**	220, 60	145	120	55	1.55	75	0.44	EEI=A3	16	0.80
150	HS, HI	1.80	NaHJ 150.679	**537793**	220, 60	117	92	55	1.55	75	0.44	EEI=A3	16	0.80
250	HS, HI	3.00	NaHJ 250.204	**529087**	220, 50	160	135	95	2.50	80	0.42	EEI=A3	32	1.32
250	HS, HI	3.00	NaHJ 250.160	**160597**	220, 50	180	155	110	2.84	75	0.41	EEI=A3	32	1.32
250	HS, HI	3.00	NaHJ 250.915	**161686**	230, 50	180	155	110	2.84	80	0.40	EEI=A3	32	1.26
250	HS, HI	3.00	NaHJ 250.340	**504109**	230/240, 50	180	155	110	2.84	80	0.39	EEI=A3	32	1.26/1.21
250	HS, HI	3.00	NaHJ 250.340	**178177**	240, 50	180	155	110	2.84	80	0.39	EEI=A3	32	1.21
250	HS, HI	3.00	NaHJ 250.163	**529072**	220, 60	160	135	95	2.50	70	0.42	A2	25	1.35
250	HS, HI	3.00	NaHJ 250.163	**160604**	220, 60	180	155	95	2.50	70	0.42	A2	25	1.35

* Step 2: EEI = A3, minimum EU energy efficiency requirements as of 2012 | Step 3: A2, minimum EU energy efficiency requirements as of 2017

Ballasts with Thermal Cut-out for HS and HI Lamps 35 to 150 W

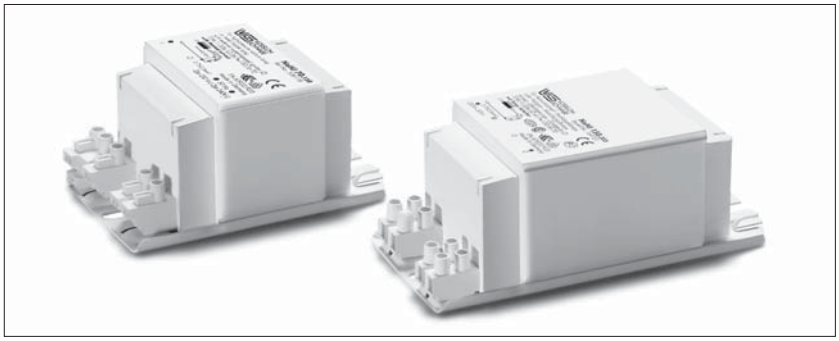

Shape: 53 x 66 mm

For high pressure sodium lamps (HS),
metal halide lamps (HI) and
ceramic discharge lamps (C-HI)
Vacuum-impregnated with polyester resin
With VS-patented, intelligent temperature switch
with automatic reset (evaluates the
temperature and current of the ballast)
Protection class I
tw 130
Ballasts for pulse ignition system on request

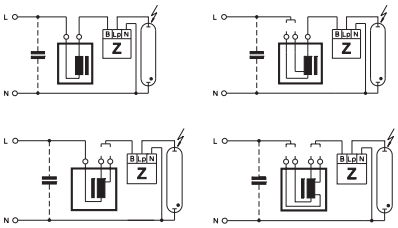

A Push-in terminals: 0.5–1.5 mm²

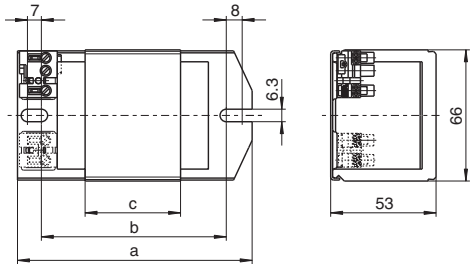

B Screw terminals: 0.5–2.5 mm²

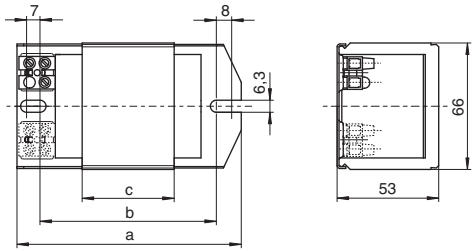

Lamp			Ballast											Capacitor	
Output W	Type	Current A	Type	**Ref. No.**	Voltage AC V, Hz	Drawing	a mm	b mm	c mm	Weight kg	Δt K	Power factor λ	Energy efficiency*	C_P µF	I_N A
Push-in terminals: 0.5–1.5 mm²															
35	HS, HI	0.53	NaHJ 35.209	**543737**	230/240, 50	A	108	86	36	1.07	35	0.36	A2	6	0.22
35	HS, HI	0.53	NaHJ 35.485	**506122**	230/240, 50	A	108	86	28	0.91	60	0.40	EEI=A3	6	0.22/0.21
35	HS, HI	0.53	NaHJ 35.638	**509170**	220, 60	A	108	86	28	0.91	50	0.41	EEI=A3	5	0.23
50	HS	0.76	NaH 50.206	**543738**	230, 50	A	108	86	48	1.39	45	0.35	A2	8	0.30
50	HS	0.76	NaHJ 70/50.157	**507341**	230, 50	A	108	86	42	1.23	55	0.37	EEI=A3	8	0.30
70	HS, HI	0.98									70	0.37	EEI=A3	12	0.38
50	HS	0.76	NaHJ 70/50.520	**538361**	230, 50	A	117	92	55	1.55	45	0.36	EEI=A3	8	0.30
70	HS, HI	0.98									55	0.36	EEI=A3	12	0.38
70	HS, HI	0.98	NaHJ 70.128	**535191**	230, 50	A	108	86	36	1.07	70	0.36	EEI=A3	12	0.38
70	HS, HI	0.98	NaHJ 70.226	**543741**	230, 50	A	108	86	48	1.39	50	0.37	A2	12	0.38
70	HS, HI	0.98	NaHJ 70.128	**533572**	230/240, 50	A	108	86	36	1.07	70/75	0.36	EEI=A3	12	0.38/0.37
70	HS, HI	0.98	NaHJ 70.653	**509169**	220, 60	A	108	86	36	1.07	60	0.42	EEI=A3	10	0.40
70	HS, HI	0.98	NaHJ 100/70.703	**507342**	230, 50	A	145	120	55	1.55	60	0.37	EEI=A3	12	0.38
100	HS, HI	1.20									70	0.43	EEI=A3	12	0.55
100	HS, HI	1.20	NaHJ 100.213	**543739**	230, 50	A	117	92	55	1.55	55	0.41	A2	12	0.55
100	HS, HI	1.20	NaHJ 100.670	**506120**	230/240, 50	A	117	92	55	1.55	70	0.42	EEI=A3	12	0.55/0.53
100	HS, HI	1.20	NaHJ 100.941	**539492**	230/240, 50	A	108	86	42	1.23	75/80	0.42	EEI=A3	12	0.55/0.53
100	HS, HI	1.20	NaHJ 150/100.973	**507343**	230, 50	A	145	120	75	2.02	55	0.41	A2	12	0.55
150	HS, HI	1.80									75	0.41	EEI=A3	20	0.57
150	HS, HI	1.80	NaHJ 150.620	**535216**	230, 50	A	145	120	64	1.80	70	0.40	EEI=A3	20	0.77
150	HS, HI	1.80	NaHJ 150.620	**538543**	230/240, 50	A	145	120	64	1.80	70/75	0.40	EEI=A3	20	0.77/0.74
new 150	HS, HI	1,80	NaHJ 150.355	**509100**	230/240, 50	A	145	120	75	2.02	65	0.39	EEI=A3	20	0.77/0.74
150	HS, HI	1.80	NaHJ 150.679	**509171**	220, 60	A	145	120	75	2.02	65	0.42	EEI=A3	16	0.80

* Step 2: EEI = A3, minimum EU energy efficiency requirements as of 2012 | Step 3: A2, minimum EU energy efficiency requirements as of 2017

new

Ballasts with Thermal Cut-out for HS and HI Lamps 35 to 250 W

Shape: 53 x 66 mm

	Lamp			Ballast											Capacitor	
	Output W	Type	Current A	Type	**Ref. No.**	Voltage AC V, Hz	Drawing	a mm	b mm	c mm	Weight kg	Δt K	Power factor λ	Energy efficiency*	C_P µF	I_N A
	Screw terminals: 0.5–2.5 mm²															
	35	HS, HI	0.53	NaHJ 35.485	**503010**	230/240, 50	B	108	86	28	0.91	60	0.40	EEI=A3	6	0.22/0.21
	35	HS	0.53	NaH 50/35.797	**539515**	230, 50	B	108	86	36	1.07	45	0.40	EEI=A3	6	0.22
	50	HS	0.76									70	0.37	EEI=A3	8	0.30
new	50	HS	0.76	NaH 50.486	**507498**	230/240, 50	B	108	86	36	1.07	65	0.37	EEI=A3	8	0.30
	50	HS	0.76	NaHJ 70/50.695	**507697**	230/240, 50	B	108	86	48	1.39	50	0.37	EEI=A3	8	0.30/0.29
	70	HS, HI	0.98								.	70	0.37	EEI=A3	12	0.38/0.37
	70	HS, HI	0.98	NaHJ 70.128	**536582**	230, 50	B	108	86	36	1.07	70	0.36	EEI=A3	12	0.38
	70	HS, HI	0.98	NaHJ 70.158	**169722**	230/240, 50	B	108	86	42	1.23	70	0.36	EEI=A3	12	0.38/0.37
	70	HS, HI	0.98	NaHJ 70.128	**538830**	230/240, 50	B	108	86	36	1.07	70/75	0.36	EEI=A3	12	0.38/0.37
new	70	HS, HI	0.98	NaHJ 70.158	**546817**	240, 50	B	108	86	42	1.23	70	0.36	EEI=A3	12	0.37
	70	HS, HI	0.98	NaHJ 100/70.703	**504131**	230, 50	B	117	92	55	1.55	60	0.37	EEI=A3	12	0.38
	100	HS, HI	1.20								.	70	0.43	EEI=A3	12	0.55
	100	HS, HI	1.20	NaHJ 100.941	**543349**	230, 50	B	108	86	42	1.23	75	0.42	EEI=A3	12	0.55
	100	HS, HI	1.20	NaHJ 100.941	**502799**	230/240, 50	B	108	86	42	1.23	75/80	0.42	EEI=A3	12	0.55/0.53
	100	HS, HI	1.20	NaHJ 150/100.973	**504135**	230, 50	B	145	120	75	2.02	55	0.41	A2	12	0.55
	150	HS, HI	1.80									75	0.41	EEI=A3	20	0.77
	150	HS, HI	1.80	NaHJ 150.355	**539270**	220, 50	B	145	120	75	2.02	65	0.39	EEI=A3	20	0.80
	150	HS, HI	1.80	NaHJ 150.620	**536593**	230, 50	B	145	120	64	1.80	70	0.40	EEI=A3	20	0.77
	150	HS, HI	1.80	NaHJ 150.995	**169721**	230/240, 50	B	145	120	75	2.02	70	0.40	EEI=A3	20	0.77/0.74
	150	HS, HI	1,80	NaHJ 150.620	**538831**	230/240, 50	B	145	120	64	1.80	70/75	0.40	EEI=A3	20	0.77/0.74
	150	HS, HI	1.80	NaHJ 150.620	**537763**	240, 50	B	130	105	64	1.80	75	0.40	EEI=A3	20	0.74
	150	HS, HI	1.80	NaHJ 150.679	**526616**	220, 60	B	145	120	75	2.02	65	0.42	EEI=A3	16	0.80
	250	HS, HI	3.00	NaHJ 250.915	**505054**	230, 50	B	180	155	110	2.84	80	0.40	EEI=A3	32	1.26
	250	HS, HI	3.00	NaHJ 250.340	**542349**	230/240, 50	B	180	155	110	2.84	80	0.39	EEI=A3	32	1.26
	250	HS, HI	3.00	NaHJ 250.340	**508723**	240, 50	B	180	155	110	2.84	80	0.39	EEI=A3	32	1.26

* Step 2: EEI = A3, minimum EU energy efficiency requirements as of 2012 | Step 3: A2, minimum EU energy efficiency requirements as of 2017

Compact Ballasts for HS and HI Lamps 35 to 150 W

Shape: 53×66 mm

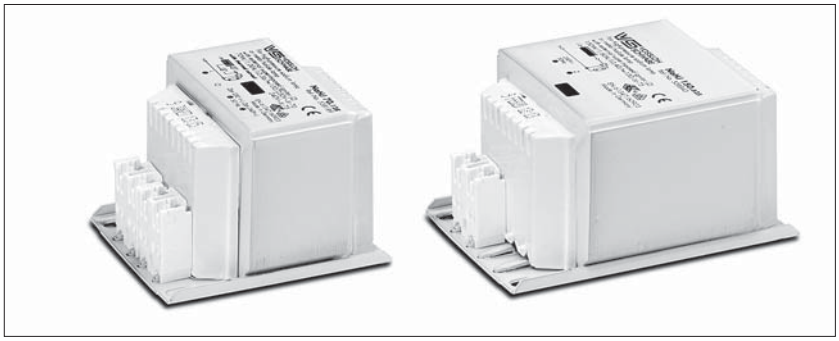

For high pressure sodium lamps (HS),
metal halide lamps (HI) and
ceramic discharge lamps (C-HI)
Vacuum-impregnated with polyester resin
Push-in terminals: 0.5–1 mm²
IDC terminals for leads H05V-U 0.5
Protection class I
Ballasts with screw terminals on request

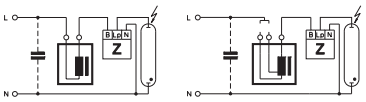

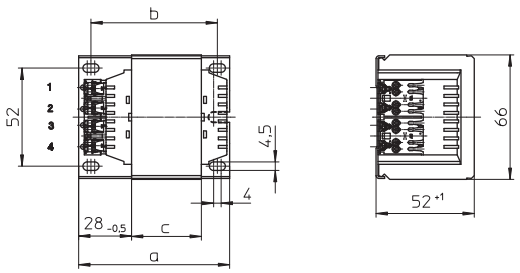

Lamp			Ballast											Capacitor	
Output W	Type	Current A	Type	**Ref. No.**	Voltage AC V, Hz	a mm	b mm	c mm	Weight kg	Δt K	tw °C	Power factor λ	Energy efficiency*	C_P µF	I_N A
35	HS, HI	0.53	NaHJ 35.485	**538807**	230/240, 50	80	67	29	0.91	60	130	0.40	EEI=A3	6	0.22/0.21
70	HS, HI	0.98	NaHJ 70.128	**538810**	230, 50	80	67	37	1.06	70	130	0.36	EEI=A3	12	0.38
70	HS, HI	0.98	NaHJ 70.128	**538823**	230/240, 50	80	67	37	1.06	70/75	130	0.36	EEI=A3	12	0.38/0.37
70	HS, HI	0.98	NaHJ 70.653	**538828**	220, 60	80	67	37	1.06	60	130	0.42	EEI=A3	10	0.40
150	HS, HI	1.80	NaHJ 150.620	**538834**	230, 50	107	94	65	1.80	70	130	0.40	EEI=A3	20	0.77
150	HS, HI	1.80	NaHJ 150.625	**538843**	240, 50	107	94	65	1.80	75	130	0.40	EEI=A3	20	0.74
150	HS, HI	1.80	NaHJ 150.679	**542557**	220, 60	107	94	65	1.80	75	130	0.44	EEI=A3	16	0.80

* Step 2: EEI = A3, minimum EU energy efficiency requirements as of 2012 | Step 3: A2, minimum EU energy efficiency requirements as of 2017

With Thermal Cut-out

Thermal cut-out with automatic reset

Lamp			Ballast											Capacitor	
Output W	Type	Current A	Type	**Ref. No.**	Voltage AC V, Hz	a mm	b mm	c mm	Weight kg	Δt K	tw °C	Power factor λ	Energy efficiency*	C_P µF	I_N A
35	HS, HI	0.53	NaHJ 35.485	**538258**	230/240, 50	80	67	29	0.91	60	130	0.40	EEI=A3	6	0.22/0.21
70	HS, HI	0.98	NaHJ 70.128	**538189**	230/240, 50	80	67	37	1.06	70/75	130	0.36	EEI=A3	12	0.38/0.37
70	HS, HI	0.98	NaHJ 70.128	**539223**	230/240, 50	80	67	37	1.06	70/75	140	0.36	EEI=A3	12	0.38/0.37
70	HS, HI	0.98	NaHJ 70.653	**538537**	220, 60	80	67	37	1.06	60	130	0.42	EEI=A3	10	0.40
100	HS, HI	1.20	NaHJ 100.581	**539081**	230/240, 50	107	94	65	1.80	60	130	0.42	EEI=A3	12	0.55/0.53
new 150	HS, HI	1.80	NaHJ 150.159	**548260**	220, 50	107	94	65	1.80	75	130	0.41	EEI=A3	20	0.77
150	HS, HI	1.80	NaHJ 150.620	**538262**	230, 50	107	94	65	1.80	70	130	0.40	EEI=A3	20	0.77
150	HS, HI	1.80	NaHJ 150.620	**539306**	230, 50	107	94	65	1.80	70	140	0.40	EEI=A3	20	0.77
150	HS, HI	1.80	NaHJ 150.620	**538264**	240, 50	107	94	65	1.80	75	130	0.40	EEI=A3	20	0.74
150	HS, HI	1.80	NaHJ 150.620	**539286**	240, 50	107	94	65	1.80	75	140	0.40	EEI=A3	20	0.74
150	HS, HI	1.80	NaHJ 150.679	**539311**	220, 60	107	94	65	1.80	75	130	0.44	EEI=A3	16	0.80

* Step 2: EEI = A3, minimum EU energy efficiency requirements as of 2012 | Step 3: A2, minimum EU energy efficiency requirements as of 2017

Ballasts with Thermal Cut-out for HS and HI Lamps 35 to 150 W, Protection Class II



Encapsulated ballast in compact plastic casing
Shape: 61 x 72 mm

For high pressure sodium lamps (HS), metal halide lamps (HI) and ceramic discharge lamps (C-HI)
With cable holder
Thermal cut-out with automatic reset
Screw terminals: 0.5 – 2.5 mm²
Protection class II
tw 130

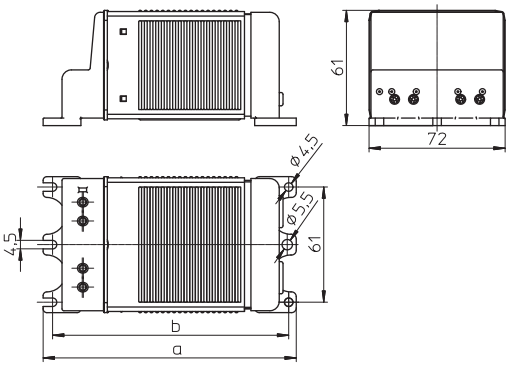

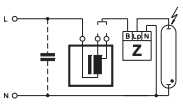

Lamp			Ballast									Capacitor	
Output W	Type	Current A	Type	**Ref. No.**	Voltage AC V, Hz	a mm	b mm	Weight kg	Δt K	Power factor λ	Energy efficiency*	C_P µF	I_N A
35	HS	0.53	NaHZ 50/35.797	**539609**	230, 50	134	125	1.60	45	0.40	EEI=A3	6	0.22
50	HS	0.76							70	0.37	EEI=A3	8	0.30
50	HS	0.76	NaHJZ 70/50.520	**533395**	230, 50	134	125	1.60	45	0.36	EEI=A3	8	0.30
70	HS, HI	0.98							65	0.36	EEI=A3	12	0.38
70	HS, HI	0.98	NaHJZ 100/70.519	**533396**	230, 50	161	152	2.10	45	0.36	EEI=A3	12	0.38
100	HS, HI	1.20							60	0.42	EEI=A3	12	0.55
100	HS, HI	1.20	NaHJZ 150/100.466	**533398**	230, 50	161	152	2.30	45	0.41	A2	12	0.85
150	HS, HI	1.80							70	0.39	EEI=A3	20	0.77

* Step 2: EEI = A3, minimum EU energy efficiency requirements as of 2012 | Step 3: A2, minimum EU energy efficiency requirements as of 2017

Ballasts for HS and HI Lamps 150 to 400 W

Shape: 71 x 75 mm

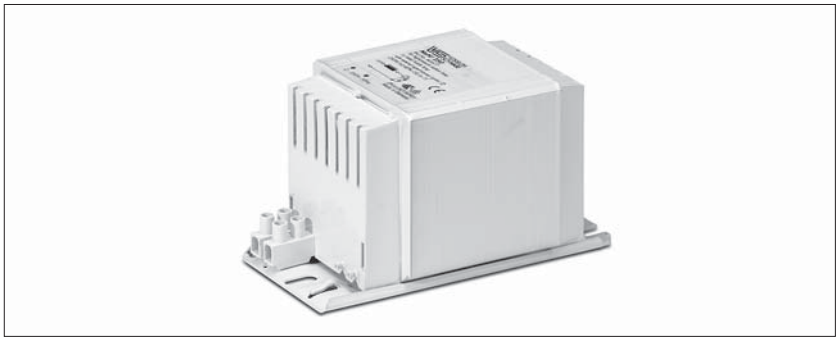

For high pressure sodium lamps (HS),
metal halide lamps (HI) and
ceramic discharge lamps (C-HI)
Vacuum-impregnated with polyester resin
Screw terminals: 0.75–2.5 mm²
Protection class I
tw 130
Ballasts for pulse ignition system on request

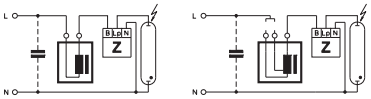

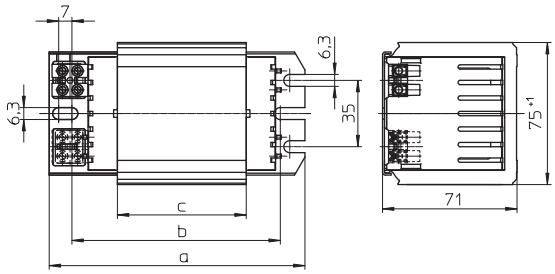

Lamp			Ballast										Capacitor	
Output W	Type	Current A	Type	**Ref. No.**	Voltage AC V, Hz	a mm	b mm	c mm	Weight kg	Δt K	Power factor λ	Energy efficiency*	C_P µF	I_N A
250	HS, HI	3.00	NaHJ 250.741	**536147**	220, 50	135	115	68	2.85	70	0.42	A2	32	1.35
250	HS, HI	3.00	NaHJ 250.741	**536148**	230, 50	135	115	68	2.85	75	0.40	A2	32	1.30
250	HS, HI	3.00	NaHJ 250.741	**536149**	240, 50	135	115	68	2.85	75	0.39	A2	32	1.25
250	HS, HI	3.00	NaHJ 250.742	**536150**	220, 60	135	115	68	2.85	70	0.42	A2	25	1.40
400	HS, HI	4.45	NaHJ 400.743	**536142**	220, 50	165	145	103	4.1	70	0.45	A2	45	2.10
400	HS, HI	4.45	NaHJ 400.743	**535142**	230, 50	165	145	103	4.1	75	0.44	A2	45	2.00
400	HS, HI	4.45	NaHJ 400.743	**536143**	240, 50	165	145	103	4.1	75	0.40	A2	45	1.85
400	HS, HI	4.45	NaHJ 400.744	**536144**	220, 60	165	145	103	4.1	70	0.44	A2	40	2.05

* Step 2: EEI = A3, minimum EU energy efficiency requirements as of 2012 | Step 3: A2, minimum EU energy efficiency requirements as of 2017

With Thermal Cut-out

Thermal cut-out with automatic reset

Lamp			Ballast										Capacitor	
Output W	Type	Current A	Type	**Ref. No.**	Voltage AC V, Hz	a mm	b mm	c mm	Weight kg	Δt K	Power factor λ	Energy efficiency*	C_P µF	I_N A
150	HS, HI	1.80	NaHJ 150.216	**543740**	230, 50	135	115	68	2.85	45	0.40	A2	20	0.77
250	HS, HI	3.00	NaHJ 250.741	**539274**	220, 50	135	115	68	2.85	70	0.42	A2	32	1.35
new 250	HS, HI	3.00	NaHJ 250.741	**544210**	230, 50	135	115	68	2.85	65	0.40	A2	32	1.30
250	HS, HI	3.00	NaHJ 250.741	**536151**	230, 50	135	115	68	2.85	75	0.40	A2	32	1.30
250	HS, HI	3.00	NaHJ 250.741	**537726**	230/240, 50	135	115	68	2.85	75	0.40	A2	32	1.30/1.25
250	HS, HI	3.00	NaHJ 250.741	**536152**	240, 50	135	115	68	2.85	75	0.39	A2	32	1.25
new 400	HS, HI	4.45	NaHJ 400.743	**548259**	220, 50	165	145	103	4.1	70	0.44	A2	45	2.10
400	HS, HI	4.45	NaHJ 400.743	**536145**	230, 50	165	145	103	4.1	75	0.44	A2	45	2.00
400	HS, HI	4.45	NaHJ 400.743	**538204**	230, 50	165	145	103	4.1	65	0.41	A2	45	2.00
400	HS, HI	4.45	NaHJ 400.743	**539209**	230/240, 50	165	145	103	4.1	75	0.41	A2	45	2.00/1.85
new 400	HS, HI	4.45	NaHJ 400.743	**543986**	240, 50	165	145	103	4.1	70	0.40	A2	45	1.85
400	HS, HI	4.45	NaHJ 400.743	**536146**	240, 50	165	145	103	4.1	75	0.40	A2	45	1.85
400	HS, HI	4.45	NaHJ 400.744	**538620**	220, 60	165	145	103	4.1	70	0.44	A2	40	2.05

* Step 2: EEI = A3, minimum EU energy efficiency requirements as of 2012 | Step 3: A2, minimum EU energy efficiency requirements as of 2017

Ballasts for HS and HI Lamps 250 to 600 W

Shape: 92 x 102 mm



For high pressure sodium lamps (HS),
metal halide lamps (HI) and
ceramic discharge lamps (C-HI)
Vacuum-impregnated with polyester resin
Screw terminals: 0.75–2.5 mm²
Protection class I
tw 130
Ballasts for pulse ignition system on request

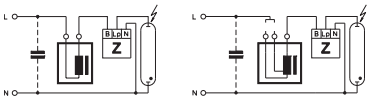

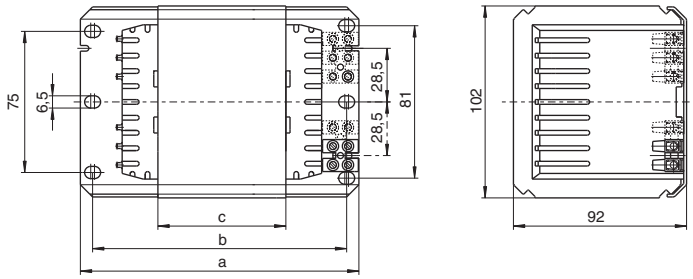

Lamp			Ballast										Capacitor	
Output W	Type	Current A	Type	**Ref. No.**	Voltage AC V, Hz	a mm	b mm	c mm	Weight kg	Δt K	Power factor λ	Energy efficiency*	C_P µF	I_N A
250	HS, HI	3.00	NaHJ 250.003	**179743**	220, 50	133	120	44	3.53	70	0.41	EEI=A3	32	1.32
250	HS, HI	3.00	NaHJ 250.727	**178771**	230, 50	133	120	44	3.53	70	0.39	EEI=A3	32	1.26
250	HS, HI	3.00	NaHJ 250.727	**500976**	240, 50	133	120	44	3.53	70	0.39	EEI=A3	32	1.21
250	HS, HI	3.00	NaHJ 250.011	**500401**	220, 60	133	120	44	3.53	65	0.43	A2	25	1.35
400	HS, HI	4.45	NaHJ 400.006	**179740**	220, 50	148	135	68	5.20	70	0.44	A2	45	2.00
400	HS, HI	4.45	NaHJ 400.006	**178790**	230, 50	148	135	68	5.20	70	0.44	A2	45	1.95
400	HS, HI	4.45	NaHJ 400.737	**500402**	240, 50	148	135	68	5.20	75	0.43	A2	45	1.90
400	HS, HI	4.45	NaHJ 400.012	**500403**	220, 60	148	135	68	5.20	70	0.44	A2	40	2.00
400	HI	3.50	J 400.027	**505782**	230/240, 50	148	135	68	5.20	60	0.45	A2	35	1.64/1.59
600	HS	6.20	NaH 600.010	**179742**	220, 50	173	160	96	6.80	70	0.44	A2	65	2.90
600	HS	6.20	NaH 600.005	**533484**	230/240, 50	173	160	96	6.80	70	0.44	A2	65	2.90/2.85
600	HS	6.20	NaH 600.140	**529560**	220, 60	173	160	96	6.80	65	0.46	A2	55	3.00

* Step 2: EEI = A3, minimum EU energy efficiency requirements as of 2012 | Step 3: A2, minimum EU energy efficiency requirements as of 2017

With Thermal Cut-out

Thermal cut-out with automatic reset

Lamp			Ballast										Capacitor	
Output W	Type	Current A	Type	**Ref. No.**	Voltage AC V, Hz	a mm	b mm	c mm	Weight kg	Δt K	Power factor λ	Energy efficiency*	C_P µF	I_N A
250	HS, HI	3.00	NaHJ 250.727	**500969**	230/240, 50	133	120	44	3.53	70	0.39	EEI=A3	32	1.26/1.21
250	HS, HI	3.00	NaHJ 250.011	**508744**	220, 60	133	120	44	3.46	65	0.43	A2	25	1.35
400	HS, HI	4.45	NaHJ 400.737	**179424**	230/240, 50	148	135	68	5.20	70/75	0.43	A2	45	1.95/1.90
400	HI	3.50	J 400.027	**509613**	230/240, 50	148	135	68	5.20	60	0.45	A2	35	1.64/1.59
400	HS, HI	4.45	NaHJ 400.012	**508741**	220, 60	148	135	68	5.20	70	0.44	A2	40	2.00
600	HS	6.20	NaH 600.005	**179454**	230/240, 50	173	160	96	6.80	70	0.44	A2	65	2.90/2.85

* Step 2: EEI = A3, minimum EU energy efficiency requirements as of 2012 | Step 3: A2, minimum EU energy efficiency requirements as of 2017

Encapsulated Ballasts with Thermal Cut-out for HS and HI Lamps 250 and 400 W

Shape: 100x113 mm

For high pressure sodium lamps (HS)
and metal halide lamps (HI)
Encapsulated with PUR electrical resin,
suitable for aggressive environments,
e.g. humid rooms
Screw terminals: 0.75–2.5 mm²
Thermal cut-out with automatic reset
For luminaires of protection class II
(luminaire design to ensure 8 mm minimum
clearance around terminals)
tw 130

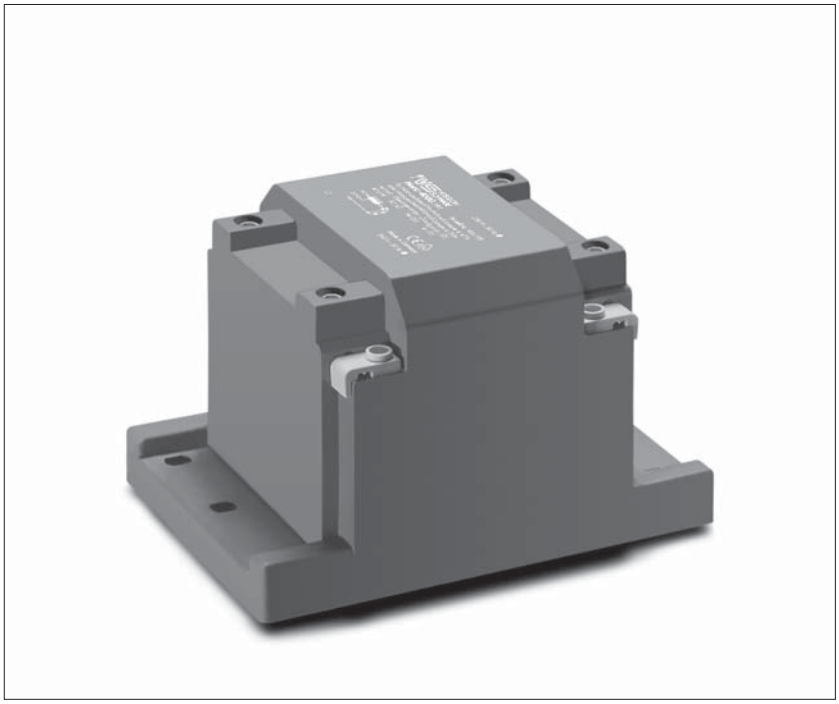

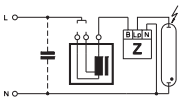

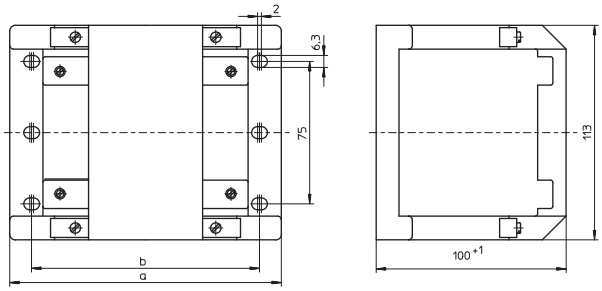

Lamp			Ballast										Capacitor	
Output W	Type	Current A	Type	**Ref. No.**	Voltage AC V, Hz	a mm	b mm	Weight kg	Δt K	Power factor λ	Energy efficiency*		C_P µF	I_N A
250	HS, HI	3.00	NaHJ 250G.533	**507721**	230/240, 50	143	120	4.90	55	0.39	A2		32	1.26/1.21
400	HS, HI	4.45	NaHJ 400G.191	**508130**	230/240, 50	158	135	5.25	70	0.43	A2		45	1.95/1.90

* Step 2: EEI = A3, minimum EU energy efficiency requirements as of 2012 | Step 3: A2, minimum EU energy efficiency requirements as of 2017

new

Ballasts for HS and HI Lamps 1000 W

Shape: 92 x 102 mm

For high pressure sodium lamps (HS)
and metal halide lamps (HI)
Vacuum-impregnated with polyester resin
Screw terminals: 0.75 – 2.5 mm²
Protection class I
tw 130
Ballasts for pulse ignition system on request

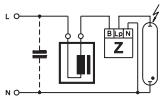

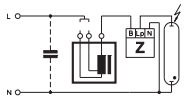



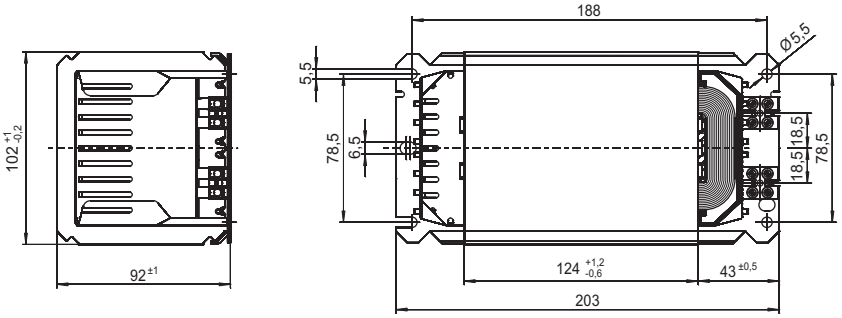

Lamp			Ballast										Capacitor	
Output W	Type	Current A	Type	**Ref. No.**	Voltage AC V, Hz	a mm	b mm	c mm	Weight kg	Δt K	Power factor λ	Energy efficiency*	C_P µF	I_N A
1000	HS	10.30	NaHJ 1000.089	**534487**	220, 50	203	188	124	8.90	80	0.47	A2	100	5.1
	HI	9.50								70	0.51	A2	85	5.0
1000	HS	10.30	NaHJ 1000.089	**539212**	220/230, 50	203	188	124	8.90	80	0.45	A2	100	5.1
	HI	9.50								70	0.49	A2	85	5.0
1000	HS	10.30	NaHJ 1000.089	**528548**	230, 50	203	188	124	8.90	80	0.45	A2	100	5.1
	HI	9.50								70	0.49	A2	85	5.0
new 1000	HS	10.30	NaHJ 1000.089	**544787**	230/240, 50	203	188	124	8.90	85	0.45	A2	100	5.1
	HI	9.50								70	0.46	A2	85	5.0
1000	HS	10.30	NaHJ 1000.089	**536140**	240, 50	203	188	124	8.90	85	0.42	A2	100	4.8
	HI	9.50								75	0.46	A2	85	4.9
1000	HS	10.30	NaHJ 1000.089	**528536**	220, 60	203	188	124	8.90	75	0.46	A2	100	5.1
	HI	9.50								60	0.50	A2	85	5.0

* Step 2: EEI = A3, minimum EU energy efficiency requirements as of 2012 | Step 3: A2, minimum EU energy efficiency requirements as of 2017

Ballasts for HI Lamps up to 2500 W

Shape: 150x155 mm

For metal halide lamps (HI)
Vacuum impregnated with polyester resin
Screw terminals: 0.75–4 mm²
For luminaires of protection class I
tw 130

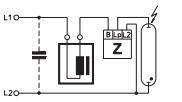

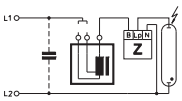

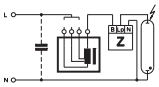

For Short Arc Lamps



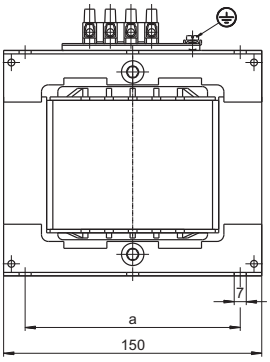

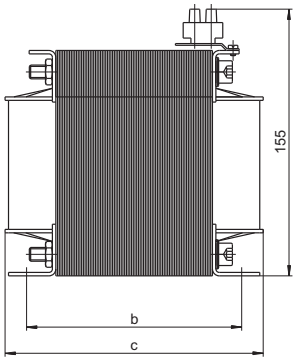

Lamp			Ballast										Capacitor	
Output W	Type	Current A	Type	**Ref. No.**	Voltage AC V, Hz	a mm	b mm	c mm	Weight kg	Δt K	Power factor λ	Energy efficiency*	C_P µF	I_N A
2000	HI	8.8	J 2000.44	**531007**	380/400, 50	125	125	150	13.7	75	0.62	A2	37	6
2000	HI	8.8	J 2000.35	**531010**	380/400/415, 50	125	150	150	14.0	75	0.58	A2	37	6
2000	HI	10.3/11.3	JD 2000.33	**531009**	380/400, 50	125	150	175	17.5	80	0.53	A2	60	6
2000	HI	10.3/11.3	JD 2000.36	**531011**	380/400/415, 50	125	150	175	17.5	80	0.50	A2	60	6
2000	HI	10.3/11.3	JD 2000.58	**531465**	380, 60	125	150	150	14.0	70	0.53	A2	60	6
new 2000	HI	12.2	JD 2000II.67	**548721**	380/400, 50	125	150	175	17.5	80	0.43	A2	85	6
2000	HI	16.5	JD 2000I.48	**531448**	220/230, 50	125	150	175	17.5	80	0.57	A2	125	10.5
2000	HI	16.5	JD 2000I.60	**531467**	230, 60	125	150	175	17.5	80	0.57	A2	125	10
For HI lamps (Short Arc Lamps) 1200 and 2500 W														
1200	HI	13.8	J 1200.37	**531013**	208, 60 230/245, 50	125	150	150	14.0	–	0.40	A2 A2	150	6
2500	HI	25.6	J 2500.38	**531014**	208, 60 230/245, 50	125	150	175	17.7	–	0.44	A2 A2	260	12.3

* Step 2: EEI = A3, minimum EU energy efficiency requirements as of 2012 | Step 3: A2, minimum EU energy efficiency requirements as of 2017

Encapsulated Ballasts for HS Lamps 1000 W and HI Lamps 1000 and 2000 W

Shape: 108 x 114 mm

For high-pressure sodium vapour lamps (HS) and metal halide lamps (HI)
Corrosion-proof due to fully encapsulation of the ballast in an aluminium casing
Specifically designed for installation in pylons
Diverse mounting options
Screw terminals: 0.75–10 mm²
For luminaires of protection class I
tw 130
With connection for protective earth conductor



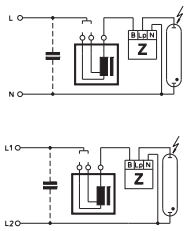

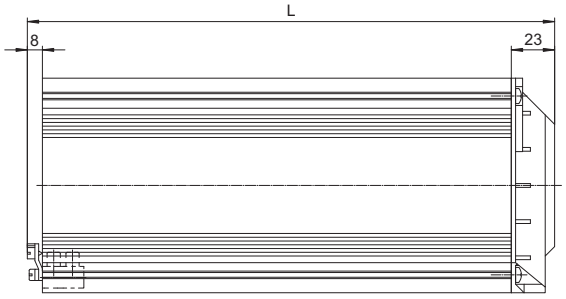

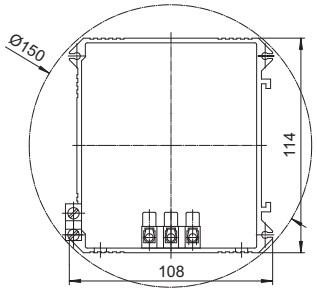

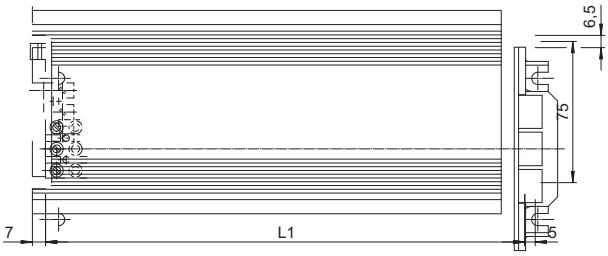

Lamp			Ballast									Capacitor	
Output W	Type	Current A	Type	**Ref. No.**	Voltage AC V, Hz	L mm	L1 mm	Weight kg	Δt K	Power factor λ	Energy efficiency*	C_P µF	I_N A
1000	HS	10.3	NaH 1000G.46	**531018**	230/240, 50	208	185	10.3	65	0.44	A2	100	5.1
1000	HI	9.5	J 1000G.41	**531017**	230/240, 50	280	185	10.2	70	0.48	A2	85	5.1
2000	HI	10.3	J 2000G.40	**531024**	380/400, 50	313	290	19.7	70	0.50	A2	60	6
2000	HI	8.8	J 2000G.42	**531021**	360/380/400, 50	261	235	13.8	90	0.62	A2	37	6

* Step 2: EEI = A3, minimum EU energy efficiency requirements as of 2012 | Step 3: A2, minimum EU energy efficiency requirements as of 2017

Ballasts for HM and HI Lamps 50 to 400 W

Shape: 53 x 66 mm

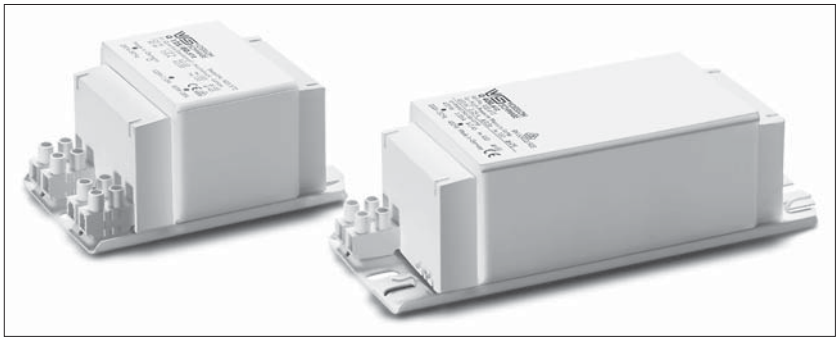

For mercury vapour lamps (HM) and
metal halide lamps (HI) with ignition voltage 1 kV
Vacuum-impregnated with polyester resin
Screw terminals: 0.5–2.5 mm²
Protection class I
tw 130

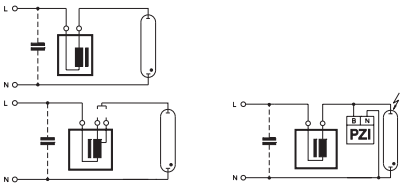

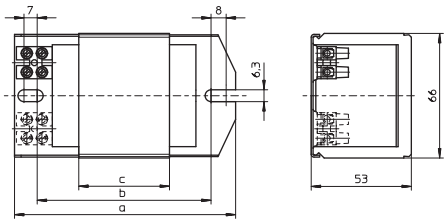

Lamp			Ballast										Capacitor	
Output W	Type	Current A	Type	**Ref. No.**	Voltage AC V, Hz	a mm	b mm	c mm	Weight kg	Δt K	Power factor λ	Energy efficiency*	C_P µF	I_N A
50	HM	0.61	Q 50.501	**167100**	220, 50	108	86	28	0.91	55	0.44	EEI=A3	7	0.28
50	HM	0.61	Q 50.550	**167213**	230, 50	108	86	28	0.91	55	0.44	EEI=A3	7	0.27
50	HM	0.61	Q 50.508	**167125**	240, 50	108	86	28	0.91	65	0.42	EEI=A3	7	0.26
50	HM	0.61	Q 50.535	**167185**	220, 60	108	86	28	0.91	50	0.44	EEI=A3	6	0.28
50	HM	0.61	Q 80/50.596	**167311**	230, 50	108	86	28	0.91	55	0.43	EEI=A3	7	0.27
80	HM	0.80								70	0.51	EEI=A3	8	0.41
50	HM	0.61	Q 80/50.592	**167306**	220, 60	108	86	28	0.91	50	0.44	EEI=A3	6	0.28
80	HM	0.80								60	0.53	EEI=A3	7	0.43
80	HM	0.80	Q 80.587	**167302**	220, 50	108	86	28	0.91	65	0.52	EEI=A3	8	0.43
80	HM	0.80	Q 80.588	**167304**	230, 50	108	86	28	0.91	70	0.51	EEI=A3	8	0.41
80	HM	0.80	Q 80.510	**167132**	240, 50	108	86	36	1.07	60	0.48	EEI=A3	8	0.40
80	HM	0.80	Q 80.584	**167299**	220, 60	108	86	28	0.91	55	0.51	EEI=A3	7	0.43
80	HM	0.80	Q 125/80.611	**167326**	230, 50	108	86	42	1.23	50	0.49	EEI=A3	8	0.41
125	HM	1.15								70	0.54	EEI=A3	10	0.60
80	HM	0.80	Q 125/80.511	**167136**	240, 50	108	86	48	1.39	50	0.48	EEI=A3	8	0.40
125	HM	1.15								70	0.52	EEI=A3	10	0.58
125	HM	1.15	Q 125.549	**169947**	220, 50	108	86	36	1.07	70	0.56	EEI=A3	10	0.63
125	HM	1.15	Q 125.568	**167263**	230, 50	108	86	36	1.07	75	0.54	EEI=A3	10	0.60
125	HM	1.15	Q 125.512	**167140**	240, 50	108	86	48	1.39	65	0.51	EEI=A3	10	0.58
new 125	HM	1.15	Q 125.598	**502818**	220, 60	108	86	36	1.07	60	0.57	EEI=A3	10	0.65
250	HM	2.13	Q 250.513	**167144****	220, 50	145	120	75	2.10	75	0.58	EEI=A3	18	1.26
250	HM	2.13	Q 250.528	**167367****	230, 50	145	120	75	2.10	75	0.56	EEI=A3	18	1.20
250	HM	2.13	Q 250.703	**507256****	240, 50	145	120	75	2.10	75	0.53	EEI=A3	18	1.15
new 250	HM	2.13	Q 250.606	**533705****	220, 60	145	120	64	1.80	70	0.58	A2	15	1.30
400	HM	3.25	Q 400.616	**528236****	220, 50	160	135	95	2.50	80	0.60	EEI=A3	25	2.00
400	HM	3.25	Q 400.561	**167250****	220, 50	180	155	110	2.88	75	0.60	A2	25	2.00
400	HM	3.25	Q 400.612	**167330****	230, 50	180	155	110	2.88	75	0.56	EEI=A3	25	1.90
400	HM	3.25	Q 400.669	**167374****	240, 50	180	155	110	2.88	75	0.54	EEI=A3	25	1.85
400	HM	3.25	Q 400.613	**167335****	220, 60	180	155	110	2.88	65	0.60	EEI=A3	25	2.00
400	HM	3.25	Q 400.613	**508245****	220, 60	180	155	95	2.50	75	0.60	EEI=A3	25	2.00

* Step 2: EEI = A3, minimum EU energy efficiency requirements as of 2012 | Step 3: A2, minimum EU energy efficiency requirements as of 2017

** Suitable for metal halide lamps (HI) with ignition voltage 1 kV in combination with pulse ignitor PZI 1000/1 K (see page 154)

Ballasts with Thermal Cut-out for HM Lamps 50 to 125 W, Protection Class II



Encapsulated ballast in compact plastic casing
Shape: 61 x 72 mm

For mercury vapour lamps (HM)
With cable holder
Thermal cut-out with automatic reset
Screw terminals: 0.5 – 2.5 mm²
Protection class II
tw 130

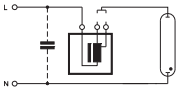

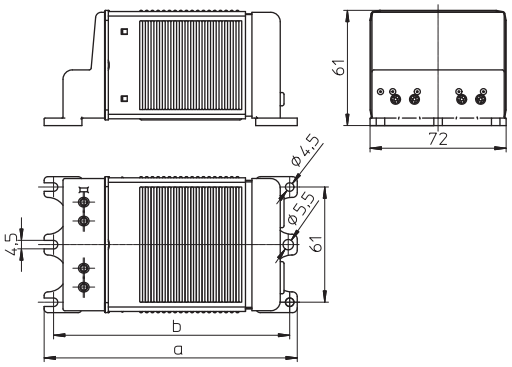

Lamp			Ballast									Capacitor	
Output W	Type	Current A	Type	**Ref. No.**	Voltage AC V, Hz	a mm	b mm	Weight kg	Δt K	Power factor λ	Energy efficiency*	C_P µF	I_N A
50	HM	0.61	QZ 80/50.551	**533399**	230, 50	134	125	1.2	50	0.43	EEI=A3	7	0.27
80	HM	0.80							65	0.51	EEI=A3	8	0.41
80	HM	0.80	QZ 125/80.553	**533400**	230, 50	134	125	1.6	45	0.50	EEI=A3	8	0.41
125	HM	1.15							60	0.53	EEI=A3	10	0.60

* Step 2: EEI = A3, minimum EU energy efficiency requirements as of 2012 | Step 3: A2, minimum EU energy efficiency requirements as of 2017

Ballasts for HM and HI Lamps 250 and 400 W

Shape: 71 x 75 mm

For mercury vapour lamps (HM) and
metal halide lamps (HI) with ignition voltage 1 kV
Vacuum-impregnated with polyester resin
Screw terminals: 0.75 - 2.5 mm²
Protection class I
tw 130

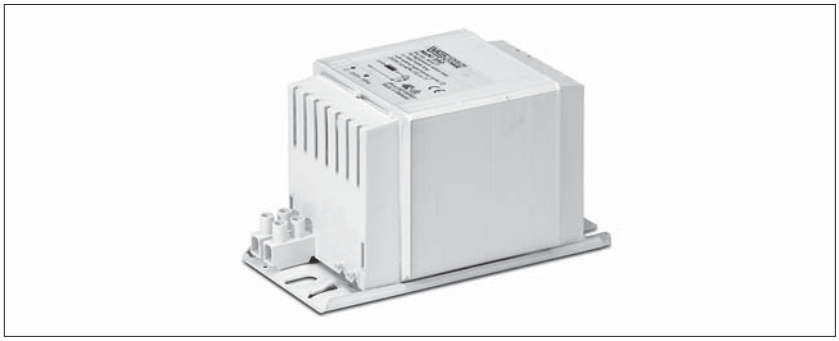

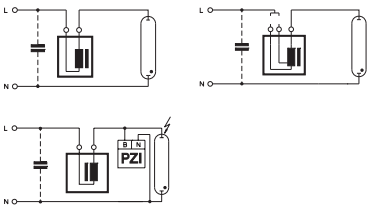

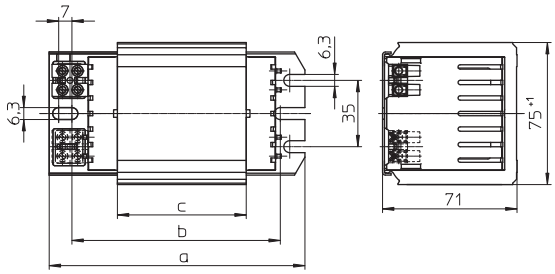

Lamp			Ballast										Capacitor	
Output W	Type	Current A	Type	**Ref. No.**	Voltage AC V, Hz	a mm	b mm	c mm	Weight kg	Δt K	Power factor λ	Energy efficiency*	C_P µF	I_N A
250	HM	2.13	Q 250.800	**536260****	230/240, 50	135	115	68	2.85	55	0.53	EEI=A3	18	1.3
400	HM	3.25	Q 400.715	**537869****	220, 50	135	115	68	2.85	70	0.59	A2	25	2.0
400	HM	3.25	Q 400.801	**536258****	230, 50	135	115	68	2.85	75	0.58	EEI=A3	25	2.0
400	HM	3.25	Q 400.801	**538034****	230, 50	135	115	68	2.85	65	0.58	EEI=A3	25	2.0
400	HM	3.25	Q 400.801	**537703****	230/240, 50	135	115	68	2.85	75	0.58	EEI=A3	25	2.0/1.85
400	HM	3.25	Q 400.732	**537873****	220, 60	135	115	68	2.85	70	0.59	A2	25	2.0

* Step 2: EEI = A3, minimum EU energy efficiency requirements as of 2012 | Step 3: A2, minimum EU energy efficiency requirements as of 2017

** Suitable for metal halide lamps (HI) with ignition voltage 1 kV in combination with pulse ignitor PZI 1000/1 K (see page 154)

With Thermal Cut-out

Thermal cut-out with automatic reset

Lamp			Ballast										Capacitor	
Output W	Type	Current A	Type	**Ref. No.**	Voltage AC V, Hz	a mm	b mm	c mm	Weight kg	Δt K	Power factor λ	Energy efficiency*	C_P µF	I_N A
250	HM	2.13	Q 250.800	**536261****	230/240, 50	135	115	68	2.85	55	0.53	EEI=A3	18	1.3
400	HM	3.25	Q 400.801	**536259****	230, 50	135	115	68	2.85	75	0.58	EEI=A3	25	2.0

* Step 2: EEI = A3, minimum EU energy efficiency requirements as of 2012 | Step 3: A2, minimum EU energy efficiency requirements as of 2017

** Suitable for metal halide lamps (HI) with ignition voltage 1 kV in combination with pulse ignitor PZI 1000/1 K (see page 154)

Ballasts for HM and HI Lamps 250 to 1000 W

Shape: 92 x 102 mm



For mercury vapour lamps (HM) and
metal halide lamps (HI) with ignition voltage 1 kV
Vacuum-impregnated with polyester resin
Screw terminals: 0.75–2.5 mm²
Protection class I
tw 130

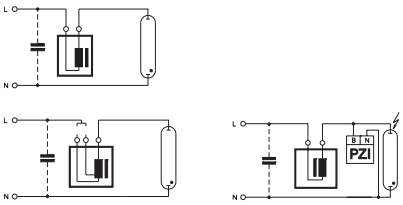

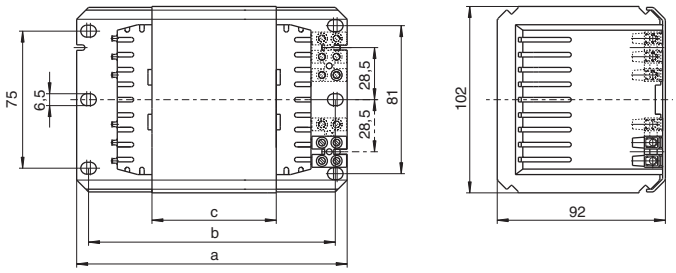

Lamp			Ballast										Capacitor	
Output W	Type	Current A	Type	**Ref. No.**	Voltage AC V, Hz	a mm	b mm	c mm	Weight kg	Δt K	Power factor λ	Energy efficiency*	C_P µF	I_N A
250	HM	2.13	Q 250.417	**504467****	230/240, 50	133	120	44	3.53	50	0.52	EEI=A3	18	1.20
400	HM	3.25	Q 400.001	**504474****	230/240, 50	133	120	44	3.53	65	0.56	EEI=A3	25	1.80
700	HM	5.40	Q 700.035	**528521**	230/240, 50	173	160	96	6.90	60	0.56	EEI=A3	40	3.40
1000	HM	7.50	Q 1000.097	**537103****	220, 50	173	160	96	6.90	75	0.61	EEI=A3	60	4.80
1000	HM	7.50	Q 1000.096	**538540****	230, 50	173	160	96	6.90	65	0.60	EEI=A3	60	4.80
1000	HM	7.50	Q 1000.096	**528761****	230, 50	173	160	96	6.90	65	0.60	EEI=A3	60	4.80
1000	HM	7.50	Q 1000.145	**528886****	240, 50	173	160	96	6.90	75	0.58	EEI=A3	60	4.60
1000	HM	7.50	Q 1000.311	**526715****	220, 60	173	160	96	6.90	70	0.61	EEI=A3	50	5.00

* Step 2: EEI = A3, minimum EU energy efficiency requirements as of 2012 | Step 3: A2, minimum EU energy efficiency requirements as of 2017

** Suitable for metal halide lamps (HI) with ignition voltage 1 kV in combination with pulse ignitor PZI 1000/1 K (see page 154)

With Thermal Cut-out

Thermal cut-out with automatic reset

Lamp			Ballast										Capacitor	
Output W	Type	Current A	Type	**Ref. No.**	Voltage AC V, Hz	a mm	b mm	c mm	Weight kg	Δt K	Power factor λ	Energy efficiency*	C_P µF	I_N A
250	HM	2.13	Q 250.417	**508746****	230/240, 50	133	120	44	3.53	50	0.52	EEI=A3	18	1.20
400	HM	3.25	Q 400.001	**505002****	230/240, 50	133	120	44	3.53	65	0.56	EEI=A3	25	1.80

* Step 2: EEI = A3, minimum EU energy efficiency requirements as of 2012 | Step 3: A2, minimum EU energy efficiency requirements as of 2017

** Suitable for metal halide lamps (HI) with ignition voltage 1 kV in combination with pulse ignitor PZI 1000/1 K (see page 154)

Ballasts for SDW-T/-TF Lamps 35, 50 and 100 W

Shape: 53 x 66 mm

These ballasts are only intended for operation with high-pressure sodium lamps SDW-T/SDW-TF (Philips)
An additional control unit is necessary
Vacuum-impregnated with polyester resin
Push-in terminals: 0.5–1.5 mm²
Protection class I
tw 130

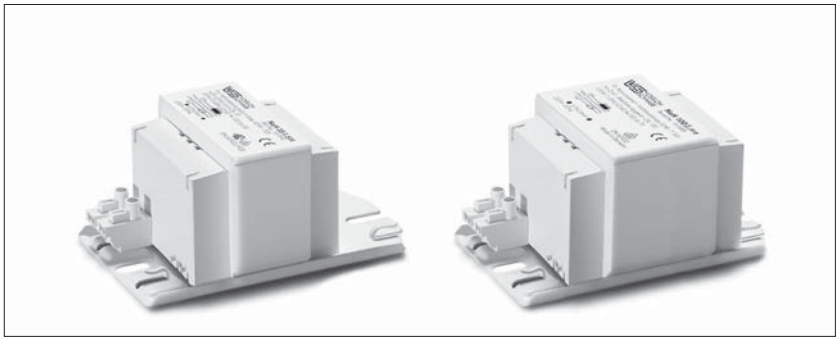

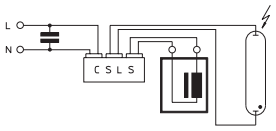

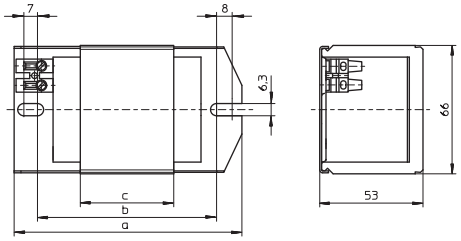

Lamp			Ballast										Capacitor	
Output W	Type	Current A	Type	**Ref. No.**	Voltage AC V, Hz	a mm	b mm	c mm	Weight kg	Δt K	Power factor λ	Energy efficiency*	C_P µF	I_N A
35	SDW-T/-TF	0.48	NaH 35II.538	**161692**	230, 50	108	86	28	0.91	50	0.40	EEI=A3	6	0.22
50	SDW-T/-TF	0.76	NaH 50II.539	**161682**	230, 50	108	86	36	1.07	55	0.40	EEI=A3	9	0.30
100	SDW-T/-TF	1.35	NaH 100II.918	**161688**	230, 50	108	86	48	1.39	75	0.40	EEI=A3	12	0.55

* Step 2: EEI = A3, minimum EU energy efficiency requirements as of 2012 | Step 3: A2, minimum EU energy efficiency requirements as of 2017

With Thermal Cut-out

Thermal cut-out with automatic reset

Lamp			Ballast										Capacitor	
Output W	Type	Current A	Type	**Ref. No.**	Voltage AC V, Hz	a mm	b mm	c mm	Weight kg	Δt K	Power factor λ	Energy efficiency*	C_P µF	I_N A
50	SDW-T/-TF	0.76	NaH 50II.539	**520998**	230, 50	108	86	36	1.07	55	0.40	EEI=A3	9	0.30
100	SDW-T/-TF	1.35	NaH 100II.918	**520935**	230, 50	108	86	48	1.39	75	0.40	EEI=A3	12	0.55

* Step 2: EEI = A3, minimum EU energy efficiency requirements as of 2012 | Step 3: A2, minimum EU energy efficiency requirements as of 2017

new

Compact Power Reduction Kits for HS Lamps 50 to 150 W

Ballast shape: 53 x 66 mm

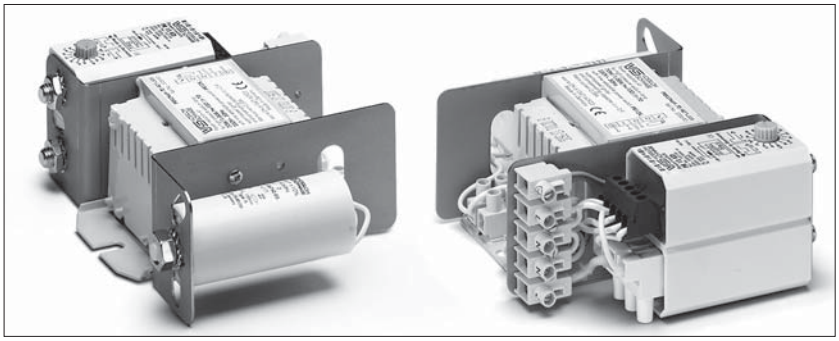

For high pressure sodium lamps (HS)
Compact power reduction kit with ballast with or without patented, intelligent thermal cut-out with automatic reset (which evaluates the temperature and current of the ballast), ignitor, power switch and compensation capacitor
With luminaire terminal block:
screw terminal 0.75–2.5 mm²
With earth terminal
Permissible load capacity: 20–100 pF
Lead length to the lamp: max. 1.5 m
tw 130
Further outputs and voltages on request
With digital timer ignitor on request

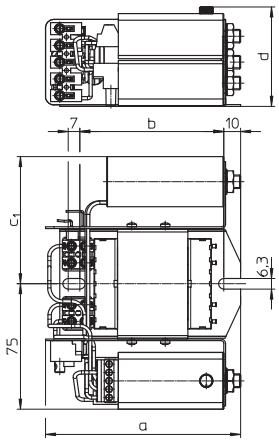

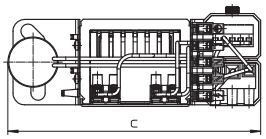

As individual components no longer need to be wired, there is a significant reduction in assembly time and costs.

Lamp			Power reduction kit													
Output	Type	Current	Type	**Ref. No.**	Voltage AC V, Hz	Mains current A	Temperature protection	a mm	b mm	c mm	c1 mm	d mm	Weight kg	Power factor λ	Energy efficiency*
Power reduction without control phase – Intelligent power switch PR 12 K LC (Light Control)															
70/40%	HS	0.98	PRKUNaH 70/40%.525	**543384**	220, 50	0.38	no	117	86	151	76	60	1.5	> 0.90	EEI=A3
100/40%	HS	1.20	PRKUNaH 100/40%.522	**543388**	220, 50	0.56	no	123	92	151	76	60	1.7	> 0.90	EEI=A3
150/40%	HS	1.80	PRKUNaH 150/40%.142	**543385**	220, 50	0.77	no	151	120	154	79	60	2.3	> 0.90	EEI=A3
new 50/40%	HS	0.76	PRKUNaH 50/40%.021	**544760**	230, 50	0.30	yes	117	86	151	76	56	1.5	> 0.90	EEI=A3
70/40%	HS	0.98	PRKUNaH 70/40%.525	**543742**	230, 50	0.38	yes	117	86	151	76	60	1.5	> 0.90	EEI=A3
100/40%	HS	1.20	PRKUNaH 100/40%.522	**543743**	230, 50	0.55	yes	123	92	151	76	60	1.7	> 0.90	EEI=A3
150/40%	HS	1.80	PRKUNaH 150/40%.142	**543744**	230, 50	0.77	yes	151	120	154	79	60	2.3	> 0.90	EEI=A3
Power reduction without control phase – Power switch PR 12 KD with selectable switching time															
70/40%	HS	0.98	PRKUNaH 70/40%.525	**539328**	220, 50	0.38	no	117	86	151	76	60	1.5	> 0.90	EEI=A3
100/40%	HS	1.20	PRKUNaH 100/40%.522	**539330**	220, 50	0.56	no	123	92	151	76	60	1.7	> 0.90	EEI=A3
150/40%	HS	1.80	PRKUNaH 150/40%.142	**539332**	220, 50	0.77	no	151	120	154	79	60	2.3	> 0.90	EEI=A3
70/40%	HS	0.98	PRKUNaH 70/40%.525	**538690**	230, 50	0.38	yes	117	86	151	76	60	1.5	> 0.90	EEI=A3
100/40%	HS	1.20	PRKUNaH 100/40%.522	**538691**	230, 50	0.56	yes	123	92	151	76	60	1.7	> 0.90	EEI=A3
150/40%	HS	1.80	PRKUNaH 150/40%.142	**538692**	230, 50	0.77	yes	151	120	154	79	60	2.3	> 0.90	EEI=A3
70/40%	HS	0.98	PRKUNaH 70/40%.525	**538700**	220, 60	0.38	no	117	86	151	76	60	1.5	> 0.90	EEI=A3
100/40%	HS	1.20	PRKUNaH 100/40%.522	**538701**	220, 60	0.56	no	123	92	151	76	60	1.7	> 0.90	EEI=A3
150/40%	HS	1.80	PRKUNaH 150/40%.142	**538702**	220, 60	0.77	no	151	120	154	79	60	2.3	> 0.90	EEI=A3
Power reduction with control phase – Power switch PU 12 K															
70/40%	HS	0.98	PRKUNaH 70/40%.525	**539329**	220, 50	0.38	no	117	86	151	76	56	1.5	> 0.90	EEI=A3
100/40%	HS	1.20	PRKUNaH 100/40%.522	**539331**	220, 50	0.56	no	123	92	151	76	56	1.7	> 0.90	EEI=A3
150/40%	HS	1.80	PRKUNaH 150/40%.142	**539333**	220, 50	0.77	no	151	120	154	79	56	2.3	> 0.90	EEI=A3
70/40%	HS	0.98	PRKUNaH 70/40%.525	**538695**	230, 50	0.38	yes	117	86	151	76	56	1.5	> 0.90	EEI=A3
100/40%	HS	1.20	PRKUNaH 100/40%.522	**538696**	230, 50	0.56	yes	123	92	151	76	56	1.7	> 0.90	EEI=A3
150/40%	HS	1.80	PRKUNaH 150/40%.142	**538697**	230, 50	0.77	yes	151	120	154	79	56	2.3	> 0.90	EEI=A3
70/40%	HS	0.98	PRKUNaH 70/40%.525	**538705**	220, 60	0.38	no	117	86	151	76	56	1.5	> 0.90	EEI=A3
100/40%	HS	1.20	PRKUNaH 100/40%.522	**538706**	220, 60	0.56	no	123	92	151	76	56	1.7	> 0.90	EEI=A3
150/40%	HS	1.80	PRKUNaH 150/40%.142	**538707**	220, 60	0.77	no	151	120	154	79	56	2.3	> 0.90	EEI=A3

* Step 2: EEI = A3, minimum EU energy efficiency requirements as of 2012 | Step 3: A2, minimum EU energy efficiency requirements as of 2017

Compact Power Reduction Kits for HS Lamps 250 and 400 W

Ballast shape: 71 x 75 mm

For high pressure sodium lamps (HS)
Compact power reduction kit with ballast with or without thermal cut-out with automatic reset, superimposed ignitor, power switch and compensation capacitor
With luminaire terminal block:
screw terminal 0.75–2.5 mm²
With earth terminal
Permissible load capacity: 20–100 pF
Lead length to the lamp: max. 1.5 m
tw 130
Further outputs and voltages on request
With digital timer ignitor on request

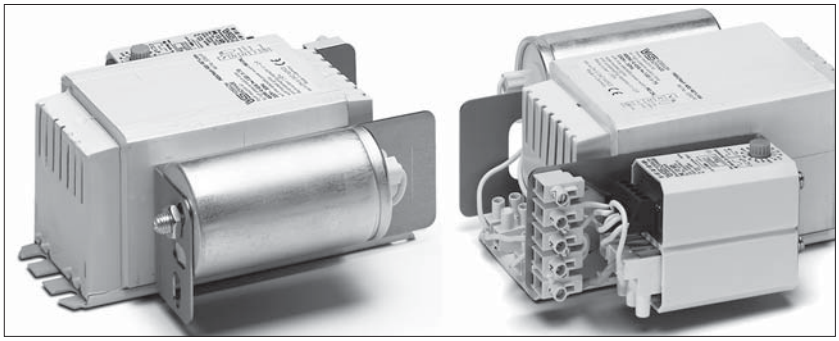

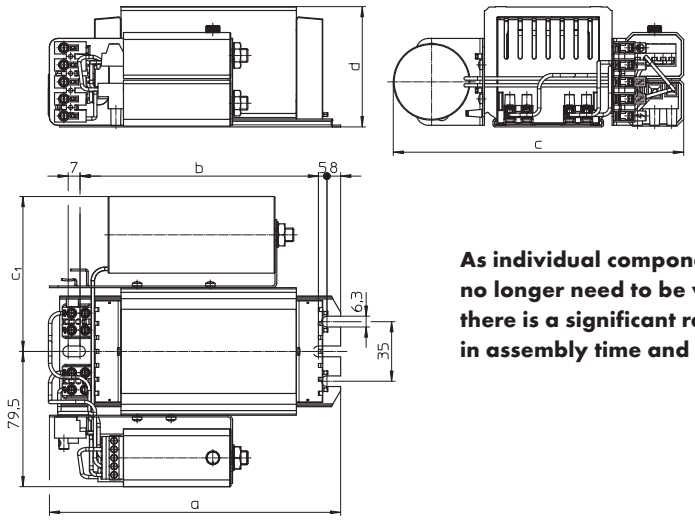

As individual components no longer need to be wired, there is a significant reduction in assembly time and costs.

Lamp			Power reduction kit													
Output W	Type	Current A	Type	**Ref. No.**	Voltage AC V, Hz	Mains current A	Temperature protection	a mm	b mm	c mm	c1 mm	d mm	Weight kg	Power factor λ	Energy efficiency*
Power reduction without control phase – Intelligent power switch PR 12 K LC (Light Control)															
250/40%	HS	3.00	PRKUNaH 250/40%.936	**543386**	220, 50	1.26	no	141	110	171	91	71	3.3	> 0.90	EEI=A3
400/40%	HS	4.45	PRKUNaH 400/40%.906	**543389**	220, 50	1.95	no	171	140	171	91	71	5.3	> 0.90	A2
250/40%	HS	3.00	PRKUNaH 250/40%.936	**543745**	230, 50	1.26	yes	141	110	171	91	71	3.3	> 0.90	EEI=A3
400/40%	HS	4.45	PRKUNaH 400/40%.906	**543746**	230, 50	1.95	yes	171	140	171	91	71	5.3	> 0.90	A2
Power reduction without control phase – Power switch PR 12 KD with selectable switching time															
250/40%	HS	3.00	PRKUNaH 250/40%.758	**546585**	220, 50	1.26	no	171	140	171	91	71	5.3	> 0.90	EEI=A3
250/40%	HS	3.00	PRKUNaH 250/40%.936	**539334**	220, 50	1.26	no	141	110	171	91	71	3.3	> 0.90	EEI=A3
400/40%	HS	4.45	PRKUNaH 400/40%.906	**539335**	220, 50	1.95	no	171	140	171	91	71	5.3	> 0.90	A2
250/40%	HS	3.00	PRKUNaH 250/40%.936	**538693**	230, 50	1.26	yes	141	110	171	91	71	3.3	> 0.90	EEI=A3
400/40%	HS	4.45	PRKUNaH 400/40%.906	**538694**	230, 50	1.95	yes	171	140	171	91	71	5.3	> 0.90	A2
250/40%	HS	3.00	PRKUNaH 250/40%.983	**538703**	220, 60	1.26	no	141	110	165	86	71	3.3	> 0.90	EEI=A3
400/40%	HS	4.45	PRKUNaH 400/40%.937	**538704**	220, 60	1.95	no	171	140	171	91	71	5.3	> 0.90	A2
Power reduction with control phase – Power switch PU 12 K															
250/40%	HS	3.00	PRKUNaH 250/40%.936	**539336**	220, 50	1.26	no	141	110	171	91	71	3.3	> 0.90	EEI=A3
400/40%	HS	4.45	PRKUNaH 400/40%.906	**539337**	220, 50	1.95	no	171	140	171	91	71	5.3	> 0.90	A2
250/40%	HS	3.00	PRKUNaH 250/40%.936	**538698**	230, 50	1.26	yes	141	110	171	91	71	3.3	> 0.90	EEI=A3
400/40%	HS	4.45	PRKUNaH 400/40%.906	**538699**	230, 50	1.95	yes	171	140	171	91	71	5.3	> 0.90	A2
250/40%	HS	3.00	PRKUNaH 250/40%.983	**538708**	220, 60	1.26	no	141	110	165	86	71	3.3	> 0.90	EEI=A3
400/40%	HS	4.45	PRKUNaH 400/40%.937	**538709**	220, 60	1.95	no	171	140	171	91	71	5.3	> 0.90	A2

* Step 2: EEI = A3, minimum EU energy efficiency requirements as of 2012 | Step 3: A2, minimum EU energy efficiency requirements as of 2017

new

Ballasts for Power Reduction of HS Lamps 70 to 250 W

Shape: 53 x 66 mm

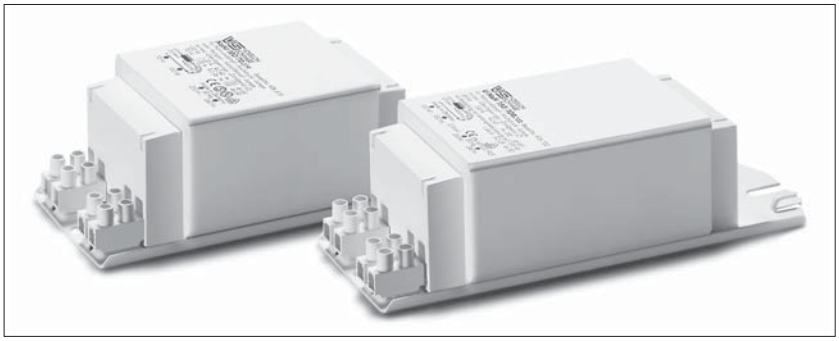

For high pressure sodium lamps (HS)
Vacuum-impregnated with polyester resin
Screw terminals: 0.5 – 2.5 mm²
Protection class I
tw 130

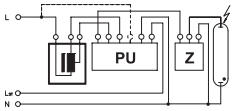

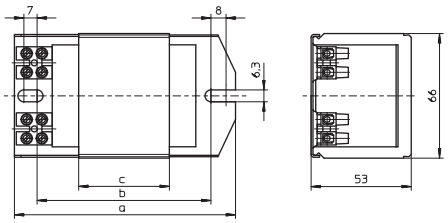

Lamp		Ballast										Capacitor	
Output W	Current A	Type	**Ref. No.**	Voltage AC V, Hz	a mm	b mm	c mm	Weight kg	Δt K	Power factor λ	Energy efficiency*	C_P µF	I_N A
70 (42)	0.98	UNaH 70/40%.501	**534128**	220, 50	108	86	42	1.23	65	0.39	EEI=A3	12	0.40
70 (42)	0.98	UNaH 70/40%.525	**535348**	230, 50	108	86	42	1.23	70	0.38	EEI=A3	12	0.38
70 (42)	0.98	UNaH 70/40%.691	**161460**	220, 60	108	86	48	1.39	60	0.42	EEI=A3	10	0.40
100 (60)	1.20	UNaH 100/40%.452	**533947**	220, 50	117	92	55	1.52	65	0.43	EEI=A3	12	0.55
100 (60)	1.20	UNaH 100/40%.522	**535347**	230, 50	117	92	55	1.52	70	0.42	EEI=A3	12	0.55
100 (60)	1.20	NaHJ 100/70.709	**161471**	220, 60	145	120	55	1.55	60/50	0.44	EEI=A3	10	0.57
150 (90)	1.80	UNaH 150/40%.453	**533948**	220, 50	145	120	75	2.03	75	0.42	EEI=A3	20	0.80
150 (90)	1.80	UNaH 150/40%.142	**535333**	230, 50	145	120	75	2.03	75	0.40	EEI=A3	20	0.77
150 (90)	1.80	UNaH 150/40%.717	**161475**	220, 60	145	120	75	2.03	70	0.44	EEI=A3	20	0.77
250 (150)	3.00	UNaH 250/40%.454	**533949**	220, 50	180	155	110	2.88	80	0.42	EEI=A3	32	1.32
new 250 (150)	3.00	UNaH 250/40%.983	**169892**	220, 60	145	120	75	2.03	75	0.40	EEI=A3	32	1.32

* Step 2: EEI = A3, minimum EU energy efficiency requirements as of 2012 | Step 3: A2, minimum EU energy efficiency requirements as of 2017

Ballasts with Thermal Cut-out for Power Reduction of HS Lamps 50 to 150 W

Shape: 53 x 66 mm

For high pressure sodium lamps (HS)
Vacuum-impregnated with polyester resin
Thermal cut-out with automatic reset
Protection class I
tw 130

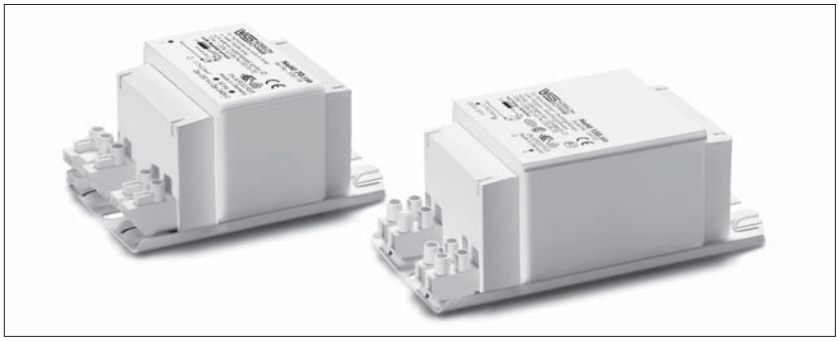

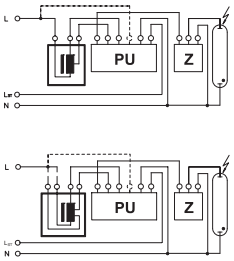

A Push-in terminals: 0.5–1.5 mm²

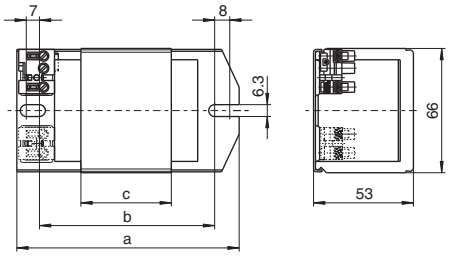

B Screw terminals: 0.5–2.5 mm²

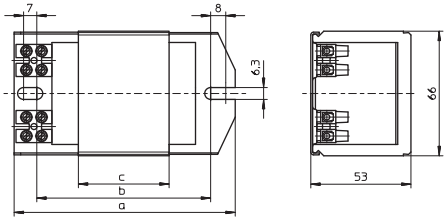

Lamp		Ballast											Capacitor	
Output W	Current A	Type	**Ref. No.**	Voltage AC V, Hz	a mm	b mm	c mm	Drawing	Weight kg	Δt K	Power factor λ	Energy efficiency*	C_P µF	I_N A
With push-in terminals: 0.5–1.5 mm²														
new 70 (42)	0.98	UNaH 70/40%.525	**544728**	230, 50	108	86	42	A	1.23	70	0.38	EEI=A3	12	0.38
new 100 (60)	1.20	UNaH 100/40%.522	**544730**	230, 50	117	92	55	A	1.55	70	0.42	EEI=A3	12	0.55
new 150 (90)	1.80	UNaH 150/40%.142	**544729**	230, 50	145	120	75	A	2.10	75	0.40	EEI=A3	20	0.77
new 150 (101)	1.80	UNaH 150/100.722	**539050**	230/240, 50	160	135	95	A	2.50	65/50	0.41	EEI=A3	20	0.77
150 (101)	1.80	UNaH 150/100.722	**507627**	230/240, 50	180	155	95	A	2.50	65/50	0.41	EEI=A3	20	0.77
With screw terminals: 0.5–2.5 mm²														
50 (33)	0.76	NaH 50/35.797	**539515**	230, 50	108	86	36	B	1.07	70/45	0.37	EEI=A3	6	0.22
70 (44)	0.98	NaHJ 70/50.695	**503136**	230, 50	108	86	48	B	1.34	70/50	0.37	EEI=A3	12	0.38
100 (64)	1.20	NaHJ 100/70.703	**504131**	230, 50	117	92	55	B	1.55	70/60	0.43	EEI=A3	12	0.55
150 (101)	1.80	NaHJ 150/100.973	**504135**	230, 50	145	120	75	B	2.10	75/55	0.41	EEI=A3	20	0.77

* Step 2: EEI = A3, minimum EU energy efficiency requirements as of 2012 | Step 3: A2, minimum EU energy efficiency requirements as of 2017

Ballasts with Thermal Cut-out for Power Reduction of HS Lamps 70 to 150 W, Protection Class II



Encapsulated ballast in compact plastic casing
Shape: 61x72 mm

For high pressure sodium lamps (HS)
With cable holder
Thermal cut-out with automatic reset
Screw terminals: 0.5–2.5 mm²
Protection class II
tw 130

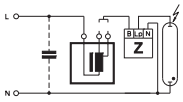

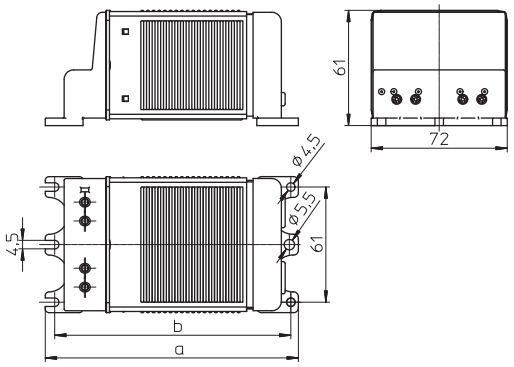

Lamp			Ballast									Capacitor	
Output W	Type	Current A	Type	**Ref. No.**	Voltage AC V, Hz	a mm	b mm	Weight kg	Δt K	Power factor λ	Energy efficiency*	C_P µF	I_N A
70 (44)	HS	0.98	NaHJZ 70/50.520	**533395**	230, 50	134	125	1.60	65/45	0.36	EEI=A3	12	0.38
100 (64)	HS	1.20	NaHJZ 100/70.519	**533396**	230, 50	161	152	2.10	60/45	0.42	EEI=A3	12	0.55
150 (101)	HS	1.80	NaHJZ 150/100.466	**533398**	230, 50	161	152	2.30	70/45	0.39	EEI=A3	20	0.77

* Step 2: EEI = A3, minimum EU energy efficiency requirements as of 2012 | Step 3: A2, minimum EU energy efficiency requirements as of 2017

Ballasts for Power Reduction of HS Lamps 250 to 600 W

Shape: 71 x 75 mm
Shape: 92 x 102 mm

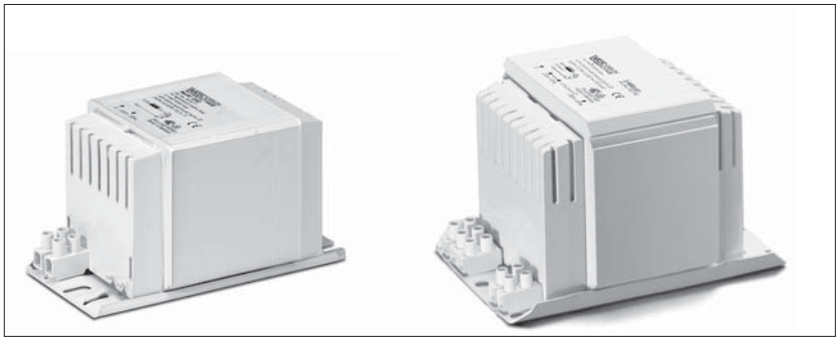

For high pressure sodium lamps (HS)
Vacuum-impregnated with polyester resin
Screw terminals: 0.75 – 2.5 mm²
Protection class I
tw 130

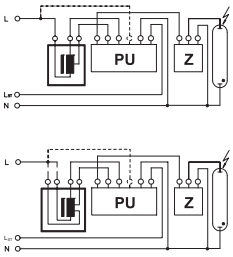

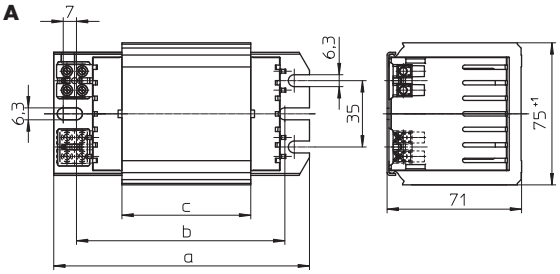

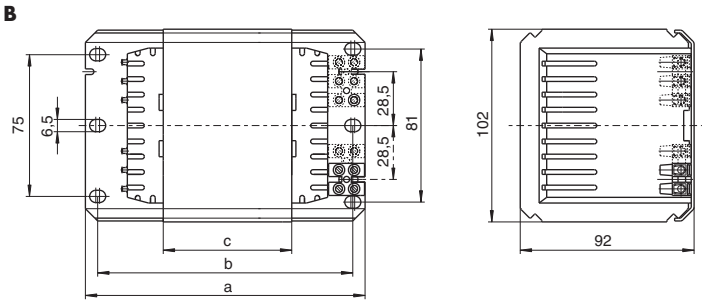

Lamp			Ballast											Capacitor	
Output W	Type	Current A	Type	**Ref. No.**	Voltage AC V, Hz	Drawing	a mm	b mm	c mm	Weight kg	Δt K	Power factor λ	Energy efficiency*	C_P µF	I_N A
250 (150)	HS	3.00	UNaH 250/40%.746	**539283**	220, 50	A	135	115	68	2.85	75	0.42	EEI=A3	32	1.35
250 (150)	HS	3.00	UNaH 250/40%.936	**543747**	230, 50	A	135	115	68	2.85	75	0.40	EEI=A3	32	1.30
250 (150)	HS	3.00	UNaH 250/40%.747	**539517**	220, 60	A	135	115	68	2.85	75	0.42	EEI=A3	25	1.40
400 (240)	HS	4.45	UNaH 400/40%.892	**538592**	220, 50	A	165	145	103	4.13	75	0.44	A2	45	2.10
400 (240)	HS	4.45	UNaH 400/40%.906	**543748**	230, 50	A	165	145	103	4.13	75	0.42	A2	45	2.00
400 (240)	HS	4.45	UNaH 400/40%.937	**538715**	220, 60	A	165	145	103	4.13	75	0.44	A2	40	2.05

* Step 2: EEI = A3, minimum EU energy efficiency requirements as of 2012 | Step 3: A2, minimum EU energy efficiency requirements as of 2017

With Thermal Cut-out

Thermal cut-out with automatic reset

Lamp			Ballast											Capacitor	
Output W	Type	Current A	Type	**Ref. No.**	Voltage AC V, Hz	Drawing	a mm	b mm	c mm	Weight kg	Δt K	Power factor λ	Energy efficiency*	C_P µF	I_N A
250 (150)	HS	3.00	UNaH 250/40%.936	**538711**	230, 50	A	135	115	68	2.85	75	0.40	EEI=A3	32	1.30
400 (240)	HS	4.45	UNaH 400/40%.906	**538710**	230, 50	A	165	145	103	4.13	75	0.42	A2	45	2.00
600 (360)	HS	6.20	UNaH 600/40%.060	**539384**	230/240, 50	B	173	160	108	6.80	75	0.44	A2	75	2.80

* Step 2: EEI = A3, minimum EU energy efficiency requirements as of 2012 | Step 3: A2, minimum EU energy efficiency requirements as of 2017

SUPERIMPOSED, PULSE AND INSTANT RESTRIKE





ELECTRONIC IGNITORS

Superimposed ignitors
Superimposed ignitors work independently of ballasts and generate defined ignition pulses during every half-wave within the stipulated voltage ranges. As the mains frequency only plays a subordinate role, these systems work equally well at 50 Hz and 60 Hz.

Superimposed ignitors should be mounted near the lampholder. The clearance needed between the ignitor and the lamp is determined by the respective maximum load capacitance, which is specified for each ignitor in the technical details. The capacitive load of the cable is dependent on its physical properties and wiring layout; this value usually ranges between 70–100 pF per metre.

Pulse ignitors
As pulse ignitors use the winding of an inductive ballast to generate the requisite pulse voltage, such ballasts must be designed to withstand these high ignition voltages.

Instant restrike ignitors
Instant restrike ignitors are a special type of ignitor for high-pressure discharge lamps. In comparison to superimposed and pulse ignitors, instant restrike ignitors have a very specified field of application. However, safety-relevant lighting systems, e.g. in power plants, stadiums, but also in television studios, make instant re-ignition of hot high-pressure discharge lamps necessary.

On the following pages, Vossloh-Schwabe presents an extensive range of ignitors for all areas of application.

3 Ignitors and Accessories for Discharge Lamps

Electronic superimposed ignitors **144–152**

Pulse ignitors **153–154**

Instant restrike ignitors **155–156**

Electronic power switches **157**

Electronic superimposed ignitors with power switch **158**

Switch units for electronic operating devices with 1–10 V interface **159**

Start-up switches **160–161**

Electronic discharge units **162**

Technical details for discharge lamps **184–225**
General technical details 533 - 540
Glossary 541 - 543

Electronic Superimposed Ignitors for HS Lamps up to 70 W

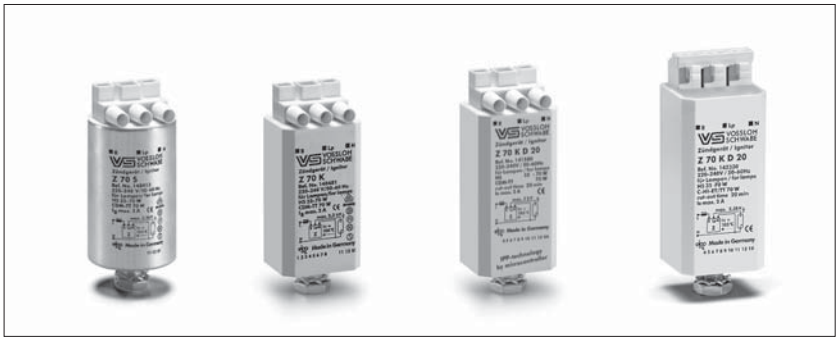

Standard version or with automatic switch-off
For high pressure sodium lamps (HS) and ceramic discharge lamps C-HI-TT/ET with base E27
Phasing of the ignition voltage:
60–90 °el and 240–270 °el
Max. permitted casing temperature: 105 °C
Fastening: male nipple with pre-assembled washer and nut
For luminaires of protection class I and II

Al casing

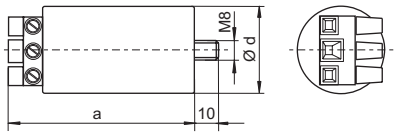

PC casing – K

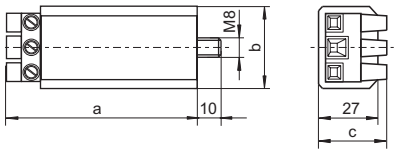

PC casing – K D20

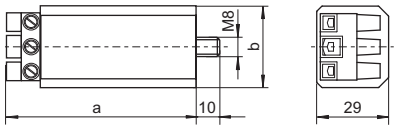

PC casing – with push-in terminals

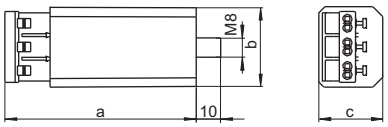

Type	Ref. No.	Voltage AC 50-60 Hz V	Max. lamp A	Internal loss W	Inherent heating K	Ignition voltage kV	Load capacity pF	Switch-off time sec./Hz	Casing d (Ø) mm	a mm	b mm	c mm	Weight g
Aluminium casing (Al) with screw terminals: 0.75–4 mm²													
Z 70 S	**140413**	220-240	2	< 0.6	< 5	1.8-2.3	20-200	–	35	76	–	–	135
Plastic casing (PC) with screw terminals: 0.75–4 mm²													
Z 70 K	**140481**	220-240	2	< 0.6	< 5	1.8-2.3	20-200	–	–	78	34	27	125
Z 70 K D20	**141580***	220-240	2	< 0.6	< 5	1.8-2.3	20-200	1216/50-60	–	80	34	30	145
Plastic casing (PC) with push-in terminals: 0.5–2.5 mm²													
Z 70 K	**142320**	220-240	2	< 0.6	< 5	1.8-2.3	20-200	–	–	81	34	27	125
Z 70 K D20	**142330***	220-240	2	< 0.6	< 5	1.8-2.3	20-200	1216/50-60	–	83	34	30	145

* With IPP technology

Electronic Superimposed Ignitors for HS Lamps 70 (DE) to 250 W and HI Lamps 35 to 250 W

Standard version or with automatic switch-off
For high pressure sodium lamps (HS), metal halide lamps (HI) and ceramic discharge lamps (C-HI)
Phasing of the ignition voltage: 60–90 °el and 240–270 °el
Max. permitted casing temperature: 105 °C
Fastening: male nipple with pre-assembled washer and nut
For luminaires of protection class I and II

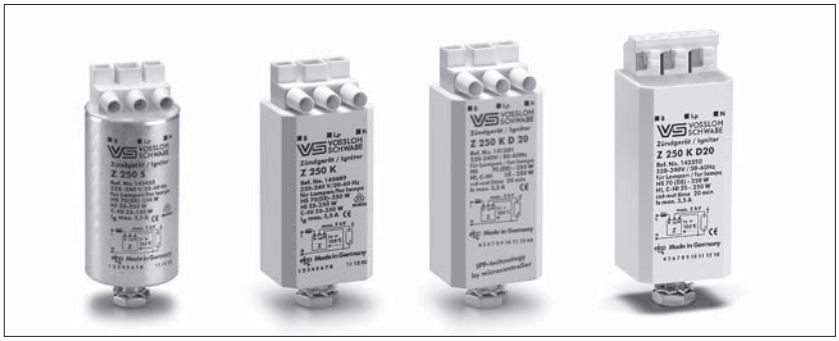

Al casing

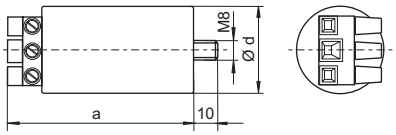

PC casing – K

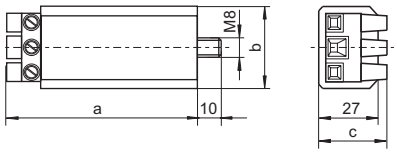

PC casing – K D20

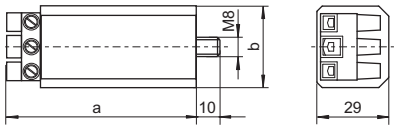

PC casing – with push-in terminals

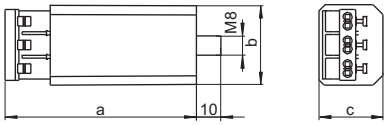

Type	Ref. No.	Voltage AC 50–60 Hz V	Max. lamp current A	Internal loss W	Inherent heating K	Ignition voltage kV	Load capacity pF	Switch-off time sec./Hz	Casing d (Ø) mm	a mm	b mm	c mm	Weight g
Aluminium casing (Al) with screw terminals: 0.75–4 mm²													
Z 250 S	**140425**	220–240	3.5	< 1.8	< 20	4–5	20–100	–	35	76	–	–	140
Plastic casing (PC) with screw terminals: 0.75–4 mm²													
Z 250 K	**140489**	220–240	3.5	< 1.8	< 20	4–5	20–100	–	–	78	34	27	130
Z 250 K D20	**141581***	220–240	3.5	< 1.8	< 20	4–5	20–100	1216/50–60	–	80	34	30	145
Plastic casing (PC) with push-in terminals: 0.5–2.5 mm²													
Z 250 K	**142340**	220–240	3.5	< 1.8	< 20	4–5	20–100	–	–	81	34	27	130
Z 250 K D20*	**142350***	220–240	3.5	< 1.8	< 20	4–5	20–100	1216/50–60	–	83	34	30	145

* With IPP technology

Electronic Superimposed Ignitors for HS Lamps 70 (DE) to 400 W and HI Lamps 35 to 400 W

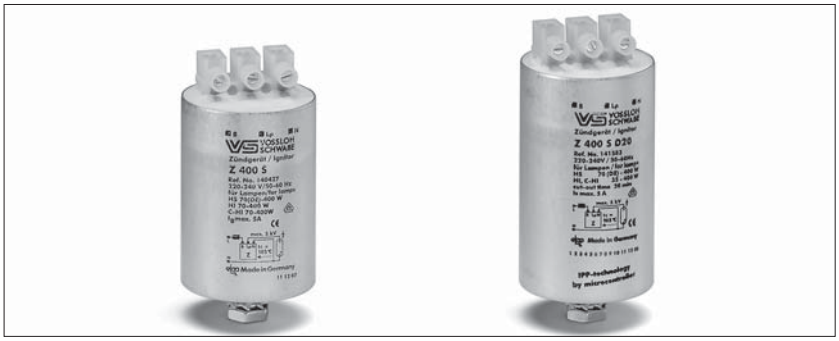

Standard version or with automatic switch-off
For high pressure sodium lamps (HS),
metal halide lamps (HI) and
ceramic discharge lamps (C-HI)
Phasing of the ignition voltage:
60–90 °el and 240–270 °el
Max. permitted casing temperature: 105 °C
Screw terminals: 0.75–4 mm²
Fastening: male nipple with pre-assembled washer and nut
For luminaires of protection class I and II

Al casing

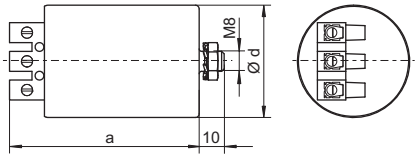

Type	Ref. No.	Voltage AC 50–60 Hz V	Max. lamp current A	Internal loss W	Inherent heating K	Ignition voltage kV	Load capacity pF	Switch-off time sec./Hz	Casing d (Ø) mm	a mm	b mm	c mm	Weight g
Aluminium casing (Al)													
Z 400 S	**140427**	220–240	5	< 3	< 25	4–5	20–100	–	45	76	–	–	250
Z 400 S D20	**141583***	220–240	5	< 3	< 25	4–5	20–100	1216/50–60	45	90	–	–	280

* With IPP technology

Electronic Superimposed Ignitors for HS Lamps 70 (DE) to 400 W and HI Lamps 35 to 400 W

Standard version or with automatic switch-off
Compact shape
For high pressure sodium lamps (HS), metal halide lamps (HI) and ceramic discharge lamps (C-HI)
Ignition voltage: 4–5 kV
Phasing of the ignition voltage: 60–90 °el and 240–270 °el
Max. permitted casing temperature: 105 °C
Fastening: male nipple with pre-assembled washer and nut
For luminaires of protection class I and II
For luminaires of protection class I (140594, 147707)

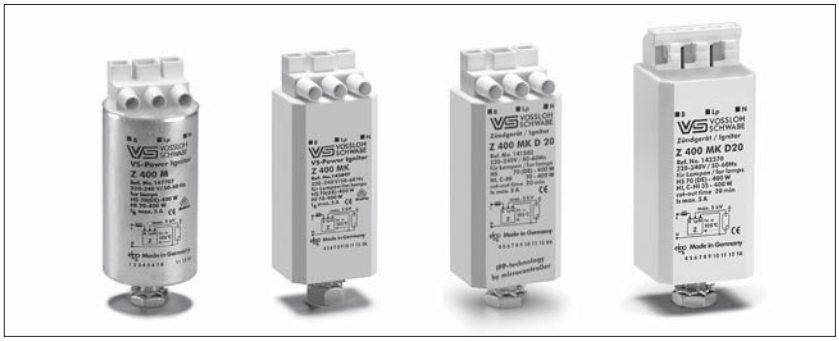

Al casing

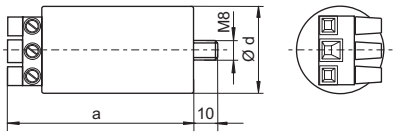

PC casing – K

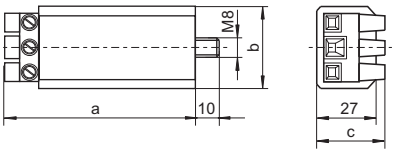

PC casing – K D20

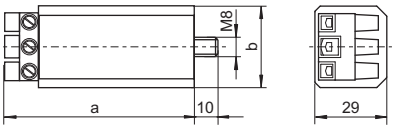

PC casing – with push-in terminals

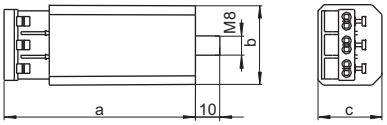

Type	Ref. No.	Voltage AC 50–60 Hz V	Max. lamp current A	Internal loss W	Inherent heating K	Ignition voltage kV	Load capacity pF	Switch-off time sec./Hz	Casing d (Ø) mm	a mm	b mm	c mm	Weight g
Aluminium casing (Al) with screw terminals: 0.75–4 mm²													
Z 400 M	**140594**	220–240	5	< 3	< 35	4–5	20–50	–	35	76	–	–	140
Z 400 M VS-Power	**147707****	220–240	5	< 3	< 35	4–5	20–50	–	35	76	–	–	140
Z 400 M S	**140693**	220–240	5	< 3	< 35	4–5	20–50	–	35	76	–	–	140
Plastic casing (PC) with screw terminals: 0.75–4 mm²													
Z 400 M K	**140597**	220–240	5	< 3	< 35	4–5	20–50	–	–	78	34	27	130
Z 400 M K VS-Power	**142897****	220–240	5	< 3	< 35	4–5	20–50	–	–	78	34	27	130
Z 400 M K D20	**141582***	220–240	5	< 3	< 35	4–5	20–50	1216/50-60	–	80	34	30	145
Plastic casing (PC) with push-in terminals: 0.5–2.5 mm²													
Z 400 M K	**142360**	220–240	5	< 3	< 35	4–5	20–50	–	–	81	34	27	130
Z 400 M K VS-Power	**142361****	220–240	5	< 3	< 35	4–5	20–50	–	–	81	34	27	130
Z 400 M K D20	**142370***	220–240	5	< 3	< 35	4–5	20–50	1216/50-60	–	83	34	30	145

Recommended for outdoor lighting
* With IPP technology
** Not suitable for C-HI lamps

Electronic Superimposed Ignitors for HS Lamps 600 and 750 W



Standard version
For high pressure sodium lamps (HS)
Phasing of the ignition voltage:
60–90 °el and 240–270 °el
Max. permitted casing temperature: 105 °C
Screw terminals: 0.75–4 mm²
Fastening: male nipple with pre-assembled washer and nut
For luminaires of protection class I and II

Al casing

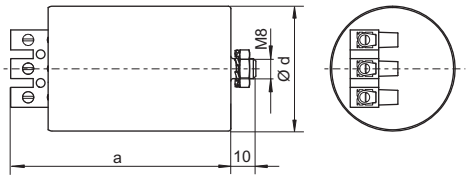

Type	Ref. No.	Voltage AC 50 - 60 Hz V	Max. lamp current A	Internal loss W	Inherent heating K	Ignition voltage kV	Load capacity pF	Switch-off time sec./Hz	Casing d (Ø) mm	a mm	b mm	c mm	Weight g
Aluminium casing (Al)													
Z 750 S	**146990**	220 - 240	8	< 3	< 20	4 - 5	20 - 100	–	50	90	–	–	360

Electronic Superimposed Ignitors for HS and HI Lamps 250 to 1000 W

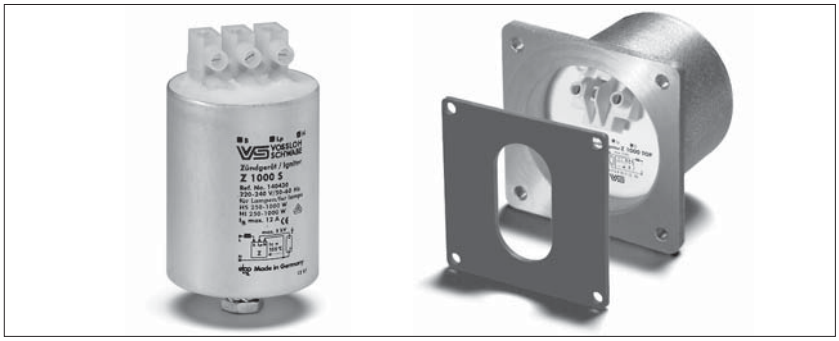

Standard version or with automatic switch-off
For high pressure sodium lamps (HS)
and metal halide lamps (HI)
Phasing of the ignition voltage:
60–90 °el and 240–270 °el
Max. permitted casing temperature: 105 °C
Screw terminals: 0.75–2.5 mm²
(Z 1000 S: 0.75–4 mm²)
Fastening: male nipple with pre-assembled washer and nut
For luminaires of protection class I and II

Al casing

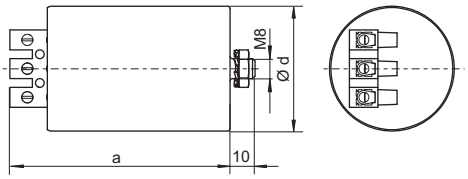

Al casing – D20

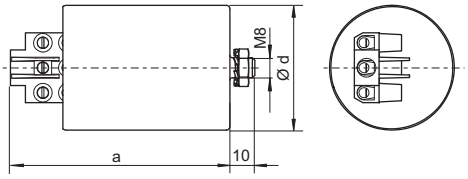

Z 1000 TOP

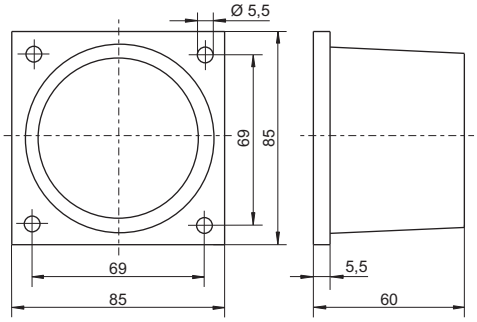

Type	Ref. No.	Voltage AC 50–60 Hz V	Max. lamp current A	Internal loss W	Inherent heating K	Ignition voltage kV	Load capacity pF	Switch-off time sec./Hz	Casing d (Ø) mm	a mm	b mm	c mm	Weight g
Aluminium casing (Al)													
Z 1000 S	**140430**	220–240	12	< 6	< 35	4–5	20–100	–	50	80	–	–	340
Z 1000 TOP	**140607****	220–240	12	< 6	< 35	4–5	20–100	–	–	85	85	60	520
Z 1000 S D20	**141584***	220–240	12	< 6	< 35	4–5	20–100	1216/50–60	50	89	–	–	340

* With IPP technology
** For flange-mounting with gasket for degree of protection IP55

Electronic Superimposed Ignitors for HS and HI Lamps up to 1000 W



Standard version
For high pressure sodium lamps (HS)
and metal halide lamps (HI)
For long lead lengths
Max. permitted casing temperature: 105 °C
Screw terminals: 0.75–2.5 mm²
Fastening: male nipple with pre-assembled washer and nut

Al casing

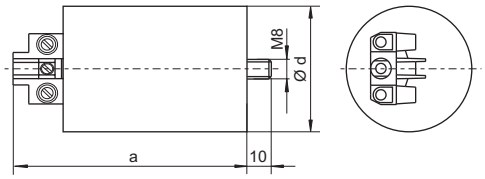

For HS and HI lamps 150 to 1000 W
Phasing of the ignition voltage: 60–90 °el
For luminaires of protection class I

Type	Ref. No.	Voltage AC 50–60 Hz V	Max. lamp current A	Internal loss W	Inherent heating K	Ignition voltage kV	Load capacity pF	Switch-off time sec./Hz	Casing d (Ø) mm	a mm	b mm	c mm	Weight g
Aluminium casing (Al)													
Z 1000 L	**140471***	220–240	12	< 6	< 35	4–5	20–2000	–	50	97	–	–	340

* Not suitable for HI lamps types NDL, WDL or for HS lamps types S, de-Luxe, Comfort or similar

For HS lamps 600 to 1000 W/400 V and HI lamps 1000 W/400 V
Phasing of the ignition voltage:
60–90 °el and 240–270 °el
For luminaires of protection class I and II

Type	Ref. No.	Voltage AC 50–60 Hz V	Max. lamp current A	Internal loss W	Inherent heating K	Ignition voltage kV	Load capacity pF	Switch-off time sec./Hz	Casing d (Ø) mm	a mm	b mm	c mm	Weight g
Aluminium casing (Al)													
Z 1000 S/400 V	**140496**	380–415	6	< 3.3	< 28	4–5	20–2000	–	45	100	–	–	295

Electronic Superimposed Ignitors for Projection Lamps up to 1200 W

Standard version
For high-pressure discharge lamps
Phasing of the ignition voltage:
60–90 °el and 240–270 °el
Max. permitted casing temperature: 105 °C
Screw terminals: 0.75–2.5 mm²
Fastening: male nipple with pre-assembled washer and nut
For luminaires of protection class I



Al casing

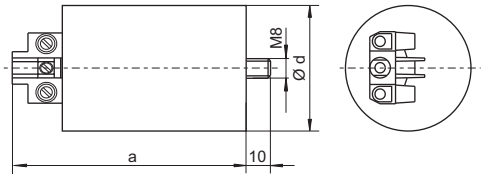

Type	Ref. No.	Voltage AC 50–60 Hz V	Max. lamp current A	Internal loss W	Inherent heating K	Ignition voltage kV	Load capacity pF	Switch-off time sec./Hz	Casing d (Ø) mm	a mm	b mm	c mm	Weight g
Aluminium casing (Al)													
Z 1200/2.5	**140608***	220–240	15	< 7.5	< 40	2–2.5	20–200	–	50	87	–	–	330
Z 1200/9	**140609****	220–240	15	< 10	< 40	7–8	20–50	–	50	135	–	–	650

* For lamps, e.g. HSR, MSR, SN

** For lamps, e.g. HMI, HTI, CDI, RSI, CSR

Electronic Superimposed Ignitors for HI Lamps up to 3500 W

Standard version
For metal halide lamps (HI)
Phasing of the ignition voltage:
60–90 °el and 240–270 °el
Max. permitted casing temperature: 105 °C
Screw terminals: 0.75–2.5 mm²
Fastening: male nipple with pre-assembled washer and nut
For luminaires of protection class I and II



A

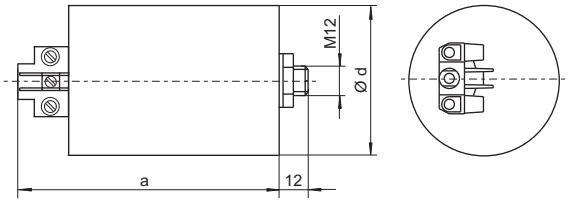

B

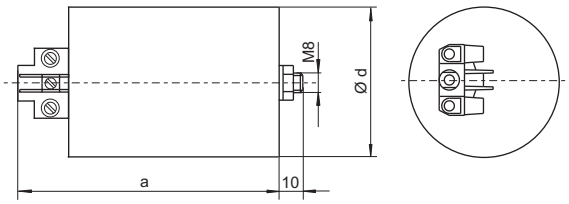

Type	Ref. No.	Voltage AC 50–60 Hz V	Max. lamp current A	Internal loss W	Inherent heating K	Ignition voltage kV	Load capacity pF	Switch-off time sec./Hz	Drawing	Casing d (Ø) mm	a mm	b mm	c mm	Weight g
Aluminium casing (Al)														
Z 2000 S	**140432**	220–240	20	< 6	< 30	4–5	20–100	–	A	65	96	–	–	640
Z 2000 S/400 V	**140497**	380–415	12	< 5	< 32	4–5	20–2000	–	B	50	98	–	–	340
Z 3500 S/400 V	**140499**	380–415	20	< 7	< 35	4–5	20–100	–	B	65	96	–	–	650

Pulse Ignitors for HS and HI Lamps up to 1000 W

With automatic switch-off
For high pressure sodium lamps (HS),
metal halide lamps (HI) and
ceramic discharge lamps (C-HI)
Max. permitted casing temperature: 95 °C
Screw terminals: 0.75–2.5 mm²
Fastening: male nipple with pre-assembled
washer and nut
For luminaires of protection class I
This pulse ignitor is only for use with ballasts that
have a dedicated tapping, as this determines the
size of the ignition voltage.



Al casing

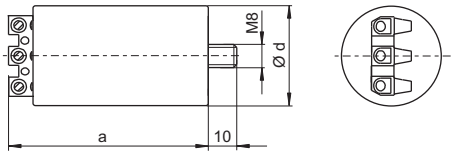

PC casing

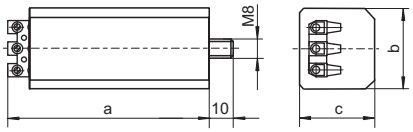

For HS lamps 50 to 1000 W,
HI lamps 35 to 1000 W and C-HI lamps 35 to 400 W

Type	Ref. No.	Voltage AC 50–60 Hz V	Number of ignition pulses per mains period	Ignition voltage kV	Load capacity pF	Programmed switch-off time sec./Hz	Casing a mm	b mm	c mm	Weight g
Plastic casing (PC)										
PZ 1000 K D20	**142784***	220–240 ±10%	≥ 2	1.8–2.3/4–5	20–1000	1216/50–60	74	34	27	100

With IPP technology

* Suitable ballasts (type: NaHJ...PZT) are available on request

For HS lamps 600 to 1000 W/400 V
and HI lamps 1000 W/400 V

Type	Ref. No.	Voltage AC 50–60 Hz V	Number of ignition pulses per mains period	Ignition voltage kV	Load capacity pF	Programmed switch-off time sec./Hz	Casing d (Ø) mm	a mm	b mm	c mm	Weight g
Aluminium casing (Al)											
PZ 1000/400 V A5	**142783***	380–420	≥ 1	4–5	20–800	300/50	40	80	–	–	155

* Suitable ballasts (type: NaHJ...PZT) are available on request

Pulse Ignitors for HS Lamps 50 to 1000 W

Standard version
For standard high pressure sodium lamps (HS)
Max. permitted casing temperature: 95 °C
Screw terminals: 0.5–1.5 mm²
Fastening: male nipple with pre-assembled washer and nut
For luminaires of protection class I

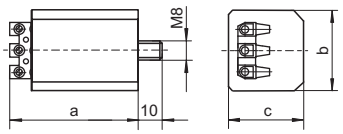

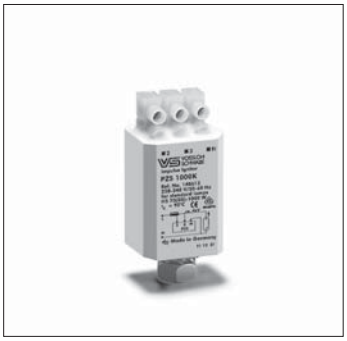

Type	Ref. No.	Voltage AC 50–60 Hz V	Number of ignition pulses per mains period	Ignition voltage kV	Load capacity pF	Programmed switch-off time sec.	Casing d (Ø) mm	a mm	b mm	c mm	Weight g
Plastic casing (PC)											
PZS 1000 K	**140613**	220–240	approx. 1/sec.	approx. 4	20–4000	–	–	50	28	27	50

Not suitable for HS lamps types Plus, Super, XL, HO
Suitable ballasts (type: NaH...P) are available on request

Pulse Ignitors for HI Lamps 250 to 2000 W, Ignition Voltage up to 1 kV

Standard version
For metal halide lamps (HI)
with ignition voltage of 0.9 kV
Max. permitted casing temperature: 95 °C
Screw terminals: 0.5–2.5 mm²
Fastening: male nipple with pre-assembled washer and nut
For luminaires of protection class I

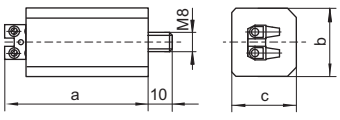

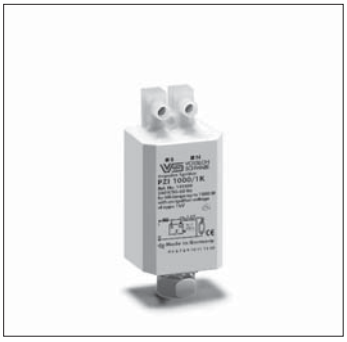

Type	Ref. No.	Voltage AC 50–60 Hz V	Number of ignition pulses per mains period	Ignition voltage kV	Load capacity pF	Programmed switch-off time sec.	Casing a mm	b mm	c mm	Weight g
Plastic casing (PC)										
PZI 1000/1 K	**140617**	220–240	≥ 1	0.7–0.9	max. 10000	–	57	28	27	50

Suitable ballasts see page 131, 133 und 134

Instant Restrike Ignitors for High-pressure Discharge Lamps up to 600 W



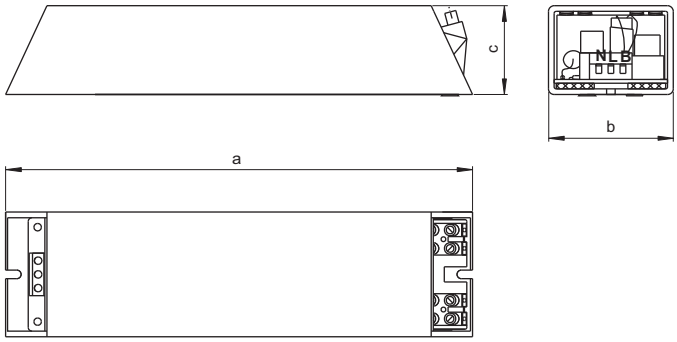

For high pressure sodium lamps (HS), metal halide lamps (HI), ceramic discharge lamps (C-HI) and projection lamps in accordance with the lamp table shown below
For installation as a symmetric ignition device (whereby the ignition voltage is split equally over both lamp electrodes)
For installation in luminaires of protection class I
Max. permitted ambient temperature t_a: 60 °C
Mains connection: screw terminal 3-poles, 0.75–2.5 mm²
Lamp connection: screw terminal 0.75–2.5 mm² for circuit 1 and 2
Fastening: 2 mounting slots for screws M4
Material: plastic casing made of ABS

CAUTION
Defective lamps must be replaced immediately

Circuit 1

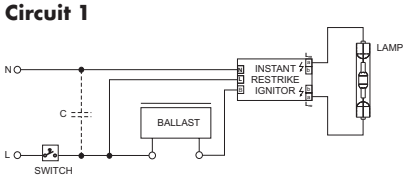

Circuit 2

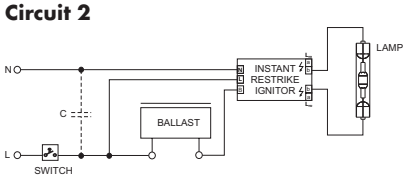

Type	**Ref. No.**	Voltage AC 50–60 Hz V	Max. lamp current A	Internal loss W	Inherent heating K	Ignition voltage* kV	Ignition time sec.	Load capacity pF	Casing a mm	b mm	c mm	Weight g
HZ 600 K	**147790**	230 ±10%	8	< 4	< 10	20–35	approx. 6	5–30	247	66	47	1000

* Depending on the respective circuit; the ignition voltage is split equally over both lamp electrodes

Lamp table

Circuit 1				**Circuit 2**		
Lamp type	Base	VS lampholder type	Catalogue page	Lamp type	Base	VS lampholder type
CDM-TD 70 W	RX7s	306	180	HBO 50 W	SFa8-2	–
HCI-TS 70 W	RX7s	306	180	MSR 125 HR	GZX9.5	–
HI 70 W (DE)	RX7s	306	180	HBO 200 W	SFc10-4	–
HS 70 W (DE)	RX7s	306	180	HBO 200 W	SFc10-4	–
RCI-TS 70 W	RX7s	306	180	MSR 200 HR	GZX9.5	–
HS 150 W (DE)	RX7s	306	180	HTI 250 W	FaX1.5	–
HMI 200 W	X515	–		HMI 400 W/SE	GZZ9.5	–
HMI 200 W/X	GZY9.5	–		HMP 400 W	FaX1.5	–
MSI 200 W	GZY9.5	–		HTI 400 W	FaX1.5	–
RSI 200 W	X515	–		RSI 400 W	GZX9.5	–
HS 250 W (DE)	Fc2	025	181–182	HBO 500 W	SFcY13-5	–
HS 400 W (DE)	Fc2	025	181–182	HMP 575 W	SFc10-4 / G22	– / in preparation
MSR 400 HR	GZZ9.5	–		HMI 575 W	SFc10-4	–
MSI 575 W	SFc10	–		RSI 575 W	G22	in preparation
MSR 575 HR	G22	in preparation		HTI 600 W	FaX1.5	–

Instant Restrike Ignitors for High-pressure Discharge Lamps 1000 W/230 V and 2000 W/400 V

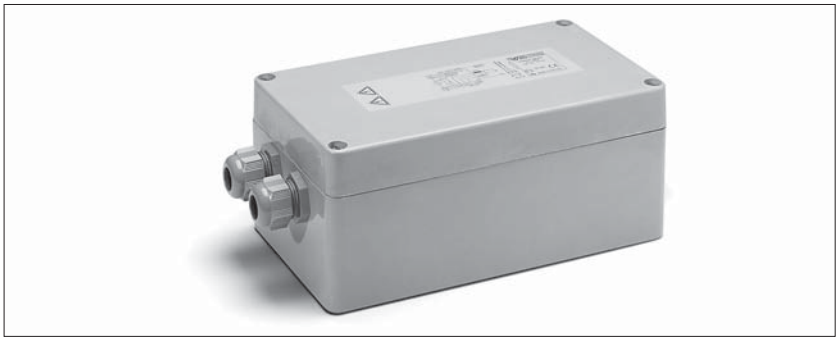

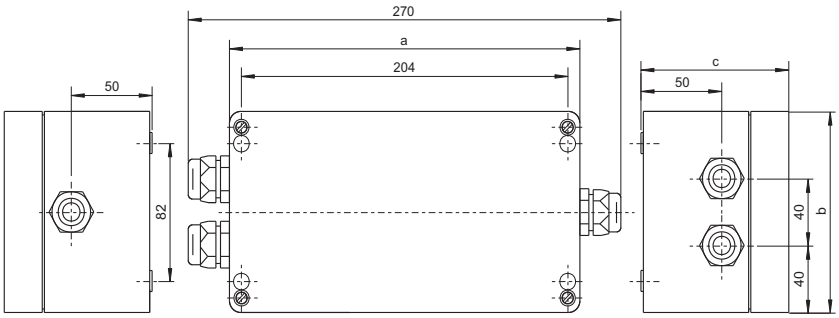

For high pressure sodium lamps (HS), metal halide lamps (HI), ceramic discharge lamps (C-HI) in accordance with the lamp table shown below
For installation as a symmetric ignition device (whereby the ignition voltage is split equally over both lamp electrodes)
Degree of protection: IP65
For installation in luminaires of protection class I
Max. permitted ambient temperature t_a: 60 °C
Mains connection: screw terminal 3-poles, max. 4 mm²
Earth connection: screw terminal max. 4 mm²
Lamp connection: screw terminal max. 4 mm²
Fastening: 4 holes Ø 6.3 mm in the base of casing
Material: casing made of fibreglass-reinforced polyester

CAUTION
Defective lamps must be replaced immediately

Circuit diagram HZ 1000 K/230V

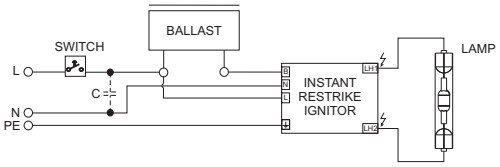

Circuit diagram HZ 2000 K/400 V

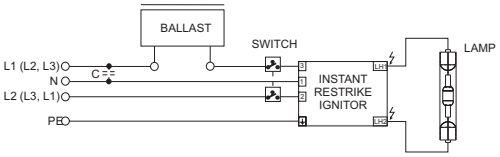

Type	Ref. No.	Voltage AC 50-60 Hz V	Max. lamp current A	Internal loss W	Inherent heating K	Ignition voltage* kV	Ignition time sec.	Load capacity pF	Casing a mm	b mm	c mm	Weight g
HZ 1000 K	**147791**	230 ±10%	12	< 5	< 10	36	approx. 6	5-50	218	120	92	3745
HZ 2000 K/400 V	**147793**	400 ±10%	12	< 5	< 10	36	approx. 6	5-30	218	120	92	3745

* The ignition voltage is split equally over both lamp electrodes

Lamp table HZ 1000 K								
Lamp type	Lamp manufacturer	Base	VS lampholder type	Catalogue page	Lamp type	Base	VS lampholder type	Catalogue page
CDM-TD 150 W	Philips	RX7s	306	180	HI 400 W (DE)	Fc2	025	181-182
HCI-TS 150 W	Osram	RX7s	306	180	HS 400 W (DE)	Fc2	025	181-182
HI 150 W (DE)		RX7s	306	180	HI 1000 W (DE)	Fc2	025	181-182
HS 150 W (DE)		RX7s	306	180	HS 1000 W (DE)	Cable, K12s-7	211	183
HI 250 W (DE)		Fc2	025	181-182	–	–	–	–
HS 250 W (DE)		Fc2	025	181-182	–	–	–	–

Lamp table HZ 2000 K/400 V				
Lamp type	Base	VS lampholder type	Catalogue page	Note
HI 2000 W (DE)	Cable, K12s-7	211	183	not suitable for HRI-TS 2000 W/N/L, HQI-TS 2000 W/N/L

Electronic Power Switches for HS Lamps up to 600 W and HM Lamps up to 700 W



For high pressure sodium lamps (HS)
and mercury vapour lamps (HM)
For power reduction by using ballasts
with multiple voltage tapping and
superimposed ignitors
Casing: PC
Max. permitted casing temperature t_c: 80 °C
Screw terminals: 0.75–2.5 mm²
Fastening: male nipple with pre-assembled
washer and nut
For luminaires of protection class I and II
Circuit diagrams for power reduction
see pages 201–202.

Advantages of PR 12 K LC

- intelligent, auto-adaptive concept
- eliminates the time-consuming task of continually adjusting the times of power-reduced operation to suit constantly changing day-night cycles
- removes the need for making adjustments due to daylight-saving times
- easy programming via dial
- no additional control line necessary
- optimal suitable for the supplementary integration into existing luminaires
- suitable for luminaires of protection class I and II

PU 12 K/PR 12 KD/PR 12 K LC

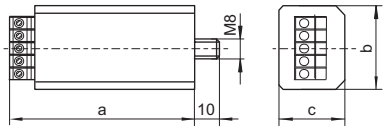

PU 120 K

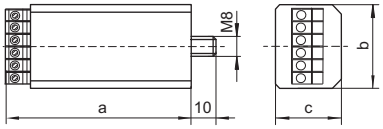

PU 121 K

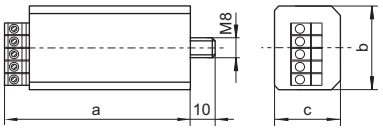

Type	Ref. No.	Voltage AC V, Hz	Max. contact current A	λ	Inherent heating K	Integrated delay switching	Control phase for power reduction (circuitry logic)	Casing a mm	b mm	c mm	Weight g
Power reduction with control phase											
PU 12 K	**140621**	230, 50 / 220, 60	8/0.5	12/1	< 25	–	disconnect or connect	74	34	27	100
PU 120 K	**140622***	230, 50 / 220, 60	8/0.5	12/1	< 10	327 sec.	disconnect	74	34	27	100
PU 121 K	**140623***	230, 50 / 220, 60	8/0.5	12/1	< 25	327 sec.	connect	74	34	27	100
Power reduction without control phase											
PR 12 K LC	**142170****	220–230 ±10%, 50 220 ±10%, 60	8/0.5	12/1	< 12	selectable	without control phase	76	34	31	100
PR 12 K D	**142150*****	220–230 ±10%, 50 220 ±10%, 60	8/0.5	12/1	< 12	selectable	without control phase	76	34	31	100

* For full-load lamp start

** Time of power-reduced operation selectable, starting point of switching-time changes automatically to suit constantly changing day-night cycles

*** Power reduction after a constant switching-time (delay switching);
swichting-time selectable: 3 | 3.5 | 4 | 4.5 | 5 | 5.5 | 6 hrs at 50 Hz

Electronic Superimposed Ignitors with Power Switch for HS Lamps 50 to 250 W



For ignition and power reduction of high pressure sodium lamps (HS)
Casing: PC
Control voltage: 230 V ±10%
Response/cut-out voltage: 170–198 V
Phasing of the ignition voltage: 60–90 °el and 240–270 °el
Max. permitted casing temperature t_c: 80 °C
Push-in terminals: 0.75–1.5 mm²
Fastening: male nipple with pre-assembled washer and nut
For luminaires of protection class I and II

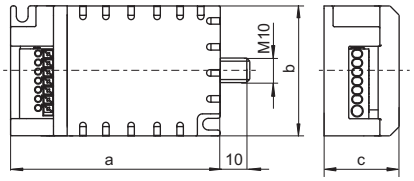

Applicable for positive switch logic allowing for terminal pin assignment of power switch

- Full load lamp start is guaranteed
- Switching to power reduced operation after delay time of approx. 5 min.

Type	Ref. No.	Voltage AC V, Hz	Max. lamp current A	Number of ignition pulses per mains period	Internal loss W	Inherent heating K	Ignition voltage kV	Load capacity pF	Programmed switch-off time sec./Hz	Casing a mm	b mm	c mm	Weight g
HS lamps 50 and 70 W													
ZPU 70 K D20	**142098**	230, 50/220, 60	2	4	< 2	< 15	1.8–2.3	20–200	1216/50–60	96	50	32	240
HS lamps 70 (DE) to 250 W													
ZPU 250 K D20	**142099**	230, 50/220, 60	3	6	< 2	< 15	4–5	20–50	1216/50–60	96	50	32	240

Circuit diagrams see page 202

Switch Units for Electronic Operating Devices with 1–10 V Interface



Vossloh-Schwabe's switch units are designed to enable one-step power reduction of lamps (FL, CFL, LED, HS, HI and C-HI) with the help of the respective electronic ballast or converter.

To this end, the switch units utilises the 1–10 V interface of the control gear unit. The switch unit is mainly intended for outdoor luminaires in systems with or without a control phase.

Shape: 56x28x27 mm
Casing: PC
Screw terminals: 0.75–2.5 mm²
Max. permissible casing temperature t_C: 80 °C
Min. permissible ambient temperature t_a: –30 °C
Fastening: plastic male nipple with pre-assembled washer and nut

Power reduction SU 1–10 V K for lighting systems featuring an L_{ST} control phase
The switch unit employs a positive switching to reduce power, i.e. power is reduced when the control phase is switched off (L_{ST} = 0 V).
The 1–10 V interface of the electronic ballast is addressed at the moment that power reduction is effected.

Power reduction PR 1–10 V K LC for lighting systems without a control phase
This switch unit can be used to effect power reduction in lighting systems that do not feature a control phase.

The 1–10 V interface is addressed on the basis of the fundamental operating principle used by Vossloh-Schwabe's PR 12 K LC power switch (details of which can be made available on request). This power switch is capable of determining the starting time of reduced-power operation over the measured operating time of a lighting system. As a result, it is no longer necessary to spend valuable time modifying the power-reduction unit to suit the continually changing day-night cycle; changing the clocks in line with daylight saving measures in the summer and winter is equally unnecessary. The 1–10 V interface of the electronic ballast is addressed as soon as the system is switched to reduced power.

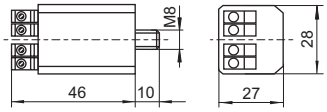

Circuit diagram SU 1–10 V K

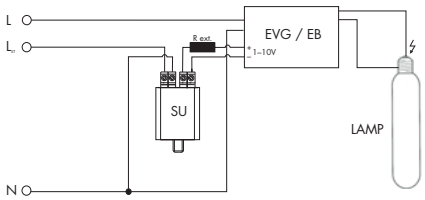

Circuit diagram PR 1–10 V K LC

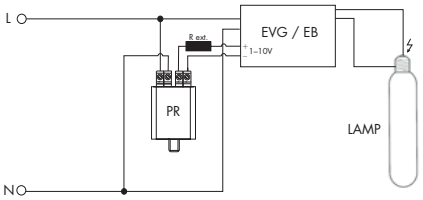

	Type	Ref. No.	Control voltage L_{ST} V, 50/60 Hz	Externally (on site) connected resistor ($R_{ext.}$) kΩ (min. 0.1 W)	Self-heating K	Weight g
	For lighting systems with control phase					
new	SU 1-10 V K	**149992**	220–240 V ±10%	1–70	< 10	50
	For lighting systems without control phase					
new	PR 1-10 V K LC	**149993**	–	1–70	< 10	50

Start-up Switches for HS and HI Lamps 35 to 1000 W and HM Lamps 50 to 700 W

To bridge a phase of darkness during the starting-up period of high-pressure discharge lamps and also after a brief interruption of the power supply until the high-pressure discharge lamps are restarted

For mercury vapour lamps (HM),
high-pressure sodium lamps (HS),
metal halide lamps (HI) and
ceramic discharge lamps (C-HI)
For HS, HI and C-HI lamps only if used together with a superimposed ignitor
Nominal voltage/frequency:
220–230 V ± 10%/50–60 Hz
240 V ± 10%/50 Hz
Max. permitted casing temperature t_C: 85 °C
Screw terminals: 0.75–2.5 mm²
Fastening: male nipple with pre-assembled washer and nut
Max. wattage of incandescent lamp: 1000 W
Automatic switch-off at 60% of the discharge lamp's luminous flux

During the ignition and start-up period, the start-up switch activates an incandescent lamp to provide a basic level of lighting. After a brief interruption in the supply voltage during the re-ignition of the discharge lamp, the integrated control electronics also bridges the phase of darkness by switching on the auxilliary lighting. The incandescent lamp is automatically switched off when the discharge lamp has achieved a sufficient luminous flux (approx. 60%).

Circuit for HM lamps

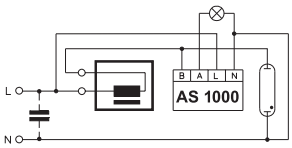

Circuit for HS and HI lamps

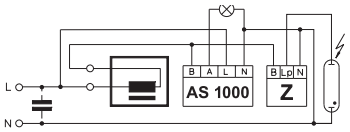

AS 1000 K
Casing: PC
Weight: 100 g
Internal loss: < 0.8 W
Inherent heating: < 10 K
Type: AS 1000 K
Ref. No.: 140627

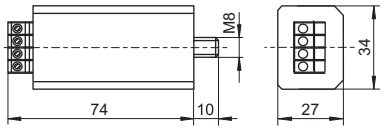



The time diagram shows some typical switching examples of a luminaire equipped with a high-pressure discharge lamp, incandescent lamp and start-up switch AS 1000 K.

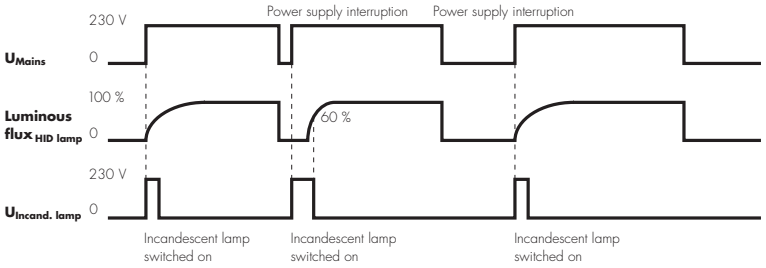

AS 1000 K A10
Specially for using with electronic ballasts or pulse ignitors for high-pressure discharge lamps
Casing: PC
Delayed switching: 655 sec. (50 Hz)
For luminaires of protection class I and II
Max. contact current: 6 A at λ 0.5, 10 A at λ 1
Internal loss: < 1 W
Inherent heating: < 12 K
Weight: 100 g
Type: AS 1000 K A10
Ref. No.: 141193

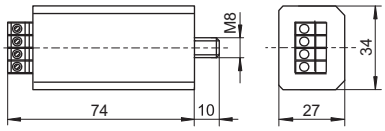



Circuit with electronic ballast

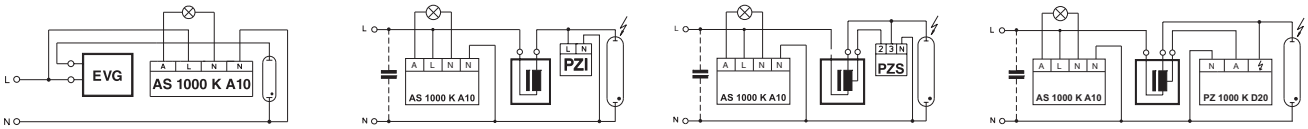

The time diagram shows some typical switching examples of a luminaire equipped with a high-pressure discharge lamp, incandescent lamp and start-up switch AS 1000 K A10.

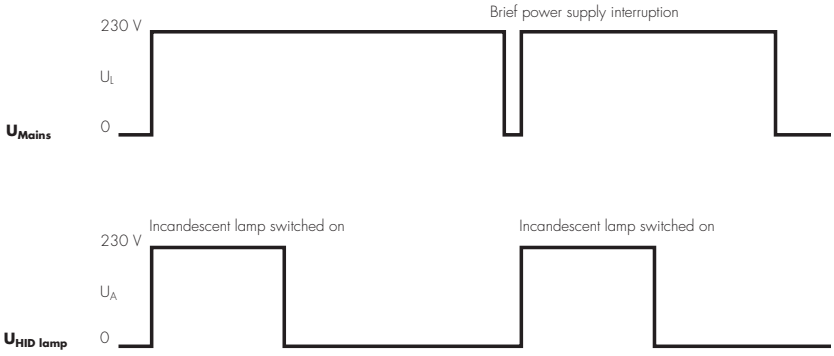

Electronic Discharge Units for Parallel Connected Capacitors 0.1 to 100 µF

On luminaires with parallel compensation and designed for plug connection to the mains supply, the plugs retain their charge for a relatively long time after disconnection from the power supply. The discharge resistors built into the compensation capacitor are designed for stationary lamps and when disconnected from the mains permit a voltage reduction to 50 V after 1 minute at the earliest.

According to European standard EN 60598-1, the compensation capacitor on mobile lamps must be discharged to 34 V within 1 second. Until now so-called discharge chokes built like conventional ballasts have been used for this purpose. These conventional discharge chokes are connected in parallel to the compensation capacitor and after disconnection from the power supply rapidly discharge the capacitor owing to their low ohmic resistance.

In their rated operating conditions, conventional discharge chokes exhibit a considerable inductive reactance which diminishes the effect of the compensation capacitor particularly if it has a low capacitance.

Furthermore, conventional discharge chokes cause considerable losses and feature high weight.

With the aid of the electronic discharge unit CE 50, it is possible to discharge a capacitor with a capacitance of up to 100 µF to 34 V within 1 second, i.e. within the time specified in EN 60598-1.

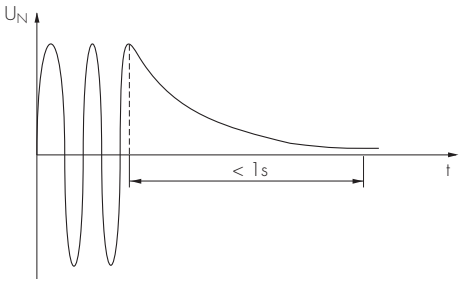

Thanks to its high reliability, low inherent losses, small dimensions and low weight, the CE 50 represents an inexpensive solution to the problem of capacitor discharge.

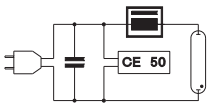

CE 50
All electronic, wear resistant switching element
Casing: aluminium
Nominal voltage: 34–264 V
Nominal frequency: 50–60 Hz
Internal loss: < 0.5 W
Inherent heating: < 6 K
Max. permitted casing temperature: 95 °C
Push-in terminals: 1 mm²
Fastening: male nipple with pre-assembled washer and nut
Weight: 40 g
Type: CE 50
Ref. No.: 140537

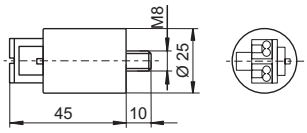



THERMOPLASTICS AND PORCELAIN





THE RIGHT MATERIAL MIX SPELLS A DECISIVE ADVANTAGE

The lampholders presented in this chapter are designed for high-pressure discharge lamps, for which high ignition voltages and high starting currents are characteristic. High temperatures can also occur with higher lamp outputs.

Vossloh-Schwabe therefore attaches great importance to ensuring casings, contacts and cables are made of high-grade materials.

Owing to the high ignition voltages, these lampholders are also governed by stricter requirements regarding creepage and air clearance distances.

When operating high-pressure discharge lamps with E27 and E40 Edison bases, care must be taken to ensure that the respective lampholders are approved for use with discharge lamps. Lampholders that are suitable in this respect are marked with "5 kV".

Lampholders with E26 and E39 bases and UL-approved wiring can be found under **www.unvlt.com**.

3 Lampholders for Discharge Lamps

E27 lampholders	**166–168**
E40 lampholders	**169–171**
G8.5 lampholders	**171**
GX8.5 lampholders, accessories	**172**
GU8.5 lampholders	**172**
GU6.5 lampholders	**173**
PGJ5 lampholders	**174**
GX10 lampholders	**175**
GY9.5 lampholders	**175**
G12, GX12-1, PG12-1, PG12-2 lampholders	**176–177**
RX7s lampholders	**177–180**
Fc2 lampholders	**181–182**
K12x30s lampholders	**182**
K12s-7 support	**183**
Technical details for discharge lamps	**184–225**
General technical details	533 - 540
Glossary	541 - 543

E27 Lampholders

For discharge lamps with base E27

E27 lampholders, for cover caps (see p. 433–435)
Profiled shape, external thread 40x2.5 IEC 60399
Nominal rating: 4/250/5 kV
Push-in twin terminals: 0.5–2.5 mm²
Fixing holes for screws M3
Rear fixing holes for self-tapping screws
acc. to ISO 1481/7049-ST3.9-C/F
Weight: 15/16.5 g, unit: 500 pcs.
Type: 64719
Ref. No.: 505721 PET GF, black, T210
Ref. No.: 505720 LCP, black, T270

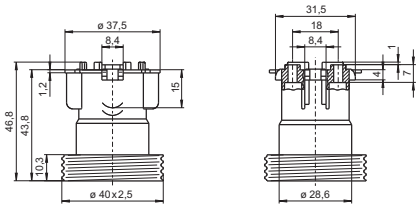



E27 lampholders, for cover caps (see p. 433–435)
Profiled shape, plain
Nominal rating: 4/250/5 kV
Push-in twin terminals: 0.5–2.5 mm²
Fixing holes for screws M3
Rear fixing holes for self-tapping screws
acc. to ISO 1481/7049-ST3.9-C/F
Weight: 15 g, unit: 500 pcs.
Type: 64770
Ref. No.: 505389 PET GF, black, T210
Ref. No.: 505014 LCP, black, T270

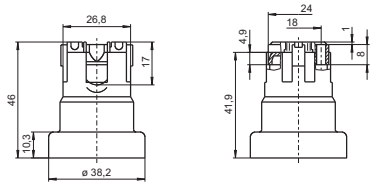



E27 lampholders
Casing: PPS, black, T230
Nominal rating: 4/500/5 kV
Screw terminals: 0.5–2.5 mm²
Spring loaded central contact
Fixing holes for screws M4 and M5
Weight: 35/35.4 g, unit: 250 pcs.
Type: 62150
Ref. No.: 108718
Type: 62151 with lamp safety catch
Ref. No.: 108719

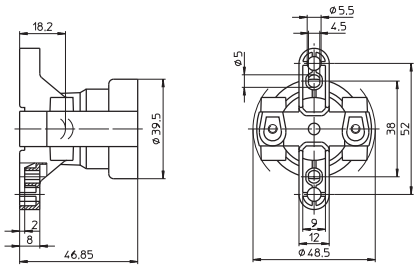



E27 lampholders
Casing: porcelain, white, T210
Nominal rating: 4/250/5 kV
Screw terminals: 0.5–2.5 mm²
Spring loaded central contact
Oblong holes for screws M4
Weight: 65/67.7 g, unit: 200 pcs.
Type: 62600
Ref. No.: 102635
Type: 62601 with lamp safety catch
Ref. No.: 102637

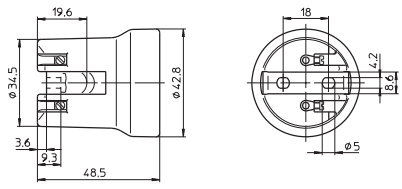



E27 lampholder
Casing: porcelain, white, T210
Nominal rating: 4/250/5 kV
Screw terminals: 0.5–2.5 mm²
Spring loaded central contact
Threaded bushes for screws M3
Weight: 69.3 g, unit: 200 pcs.
Type: 62622
Ref. No.: 108416

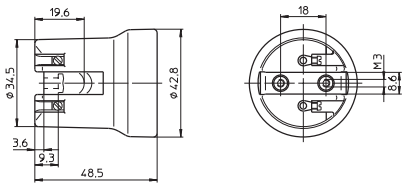



E27 lampholders
Casing: porcelain, white, T210
Nominal rating: 4/250/5 kV
Screw terminals: 0.5–2.5 mm²
Spring loaded central contact
Oblong holes for screws M4, length max. 15 mm
Weight: 106.8/103.9 g, unit: 100 pcs.
Type: 62104
Ref. No.: 102615
Type: 62105 with lamp safety catch
Ref. No.: 102617

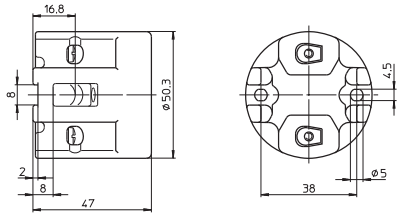



E27 lampholders
Casing: porcelain, white, T210
Nominal rating: 4/250/5 kV
Screw terminals: 0.5–2.5 mm²
Spring loaded central contact
Fixing bracket with slot for screws M5
Weight: 113 g, unit: 100 pcs.
Type: 62110
Ref. No.: 106585
Type: 62111 with lamp safety catch
Ref. No.: 109568

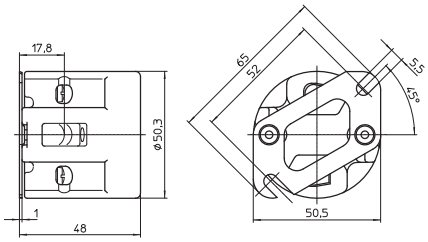



E27 lampholders
Casing: porcelain, white, T270
Nominal rating: 4/250/5 kV
Screw terminals: 0.5–2.5 mm²
Spring loaded central contact
Fixing oblong holes for screws M4
Weight: 60.6 g, unit: 200 pcs.
Type: 62050
Ref. No.: 102599
Type: 62010 with lamp safety catch (with spring)
Ref. No.: 102577
Type: 62009 with lamp safety catch (with crushing)
new **Ref. No.: 544605**

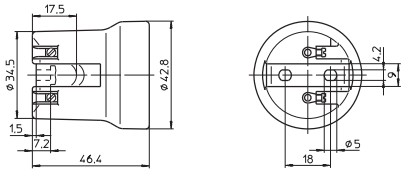



E27 lampholder
Casing: porcelain, white, T270
Nominal rating: 4/250/5 kV
Screw terminals: 0.5–2.5 mm²
Spring loaded central contact
Fastening bushes for screws M3
Weight: 66.3 g, unit: 200 pcs.
Type: 62015
Ref. No.: 102582

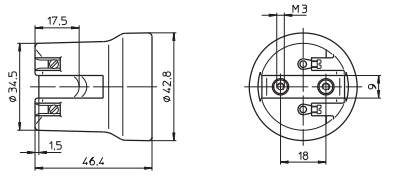



new

E27 lampholder, one-piece
Material: porcelain, white, T270
Nominal rating: 4/250/5 kV
Screw terminals: 0.5–2.5 mm²
Spring loaded central contact
Fixing oblong holes for screws M4
Weight: 60.5 g, unit: 200 pcs.
Type: 62070
new **Ref. No.: 543304**

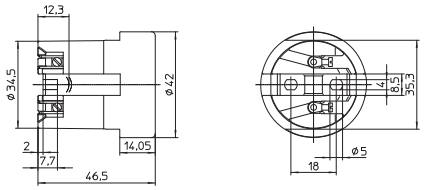



E27 lampholder
Material: porcelain, white, T270
Nominal rating: 4/250/5 kV
Screw terminals: 0.5–2.5 mm²
With lateral fixing flange,
tilt angle: 15°
Spring loaded central contact
Fixing hole for screw M4
Weight: 67.6 g, unit: 200 pcs.
Type: 62415
Ref. No.: 543414

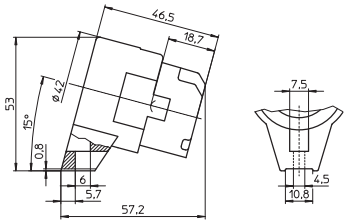



E27 lampholder, for cover caps (see page 435)
Casing: porcelain, white, T270
Nominal rating: 4/250/5 kV
Screw terminals: 0.5–2.5 mm²
Spring loaded central contact
Fixing oblong holes for screws M4
Weight: 66.5 g, unit: 150 pcs.
Type: 62310
Ref. No.: 102624

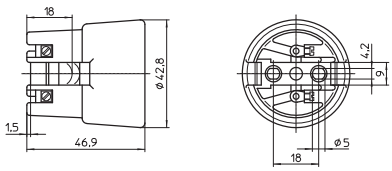



E27 lampholder
For cover caps type 80010, 97735
and 97742 (see page 441)
Casing: porcelain, white, T270
Nominal rating: 4/250/5 kV
Screw terminals: 0.5–2.5 mm²
Spring loaded central contact
Fixing oblong holes for screw M4
Weight: 66.5 g, unit: 200 pcs.
Type: 62370
Ref. No.: 543303

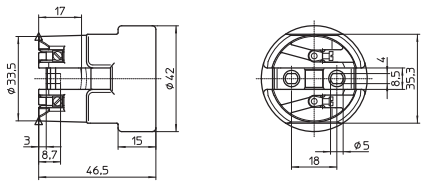



E40 Lampholders

For discharge lamps with base E40

Nominal rating: 18/500/5 kV
Screw terminals: 1.5–4 mm²
Spring loaded central contact

E40 lampholders
Casing: PPS, black, T240
Oblong holes for screws M5
Weight: 111.7/112.1 g, unit: 40 pcs.
Type: 12600/12601
Ref. No.: 400913
Ref. No.: 400914 with lamp safety catch
With steel thread
Ref. No.: 533428
Ref. No.: 533429 with lamp safety catch

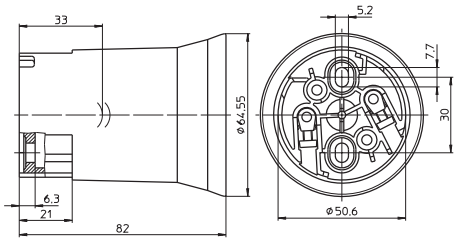



E40 lampholders
Casing: PPS, black, T240
Fixing bracket with slots for screws M5
Weight: 122.3/122.7 g, unit: 40 pcs.
Type: 12610/12611
Ref. No.: 400915
Ref. No.: 400916 with lamp safety catch
With steel thread
Ref. No.: 533430
Ref. No.: 533431 with lamp safety catch

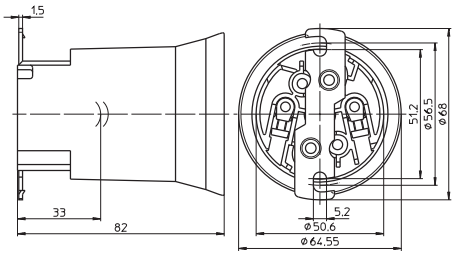



E40 lampholders
Casing: PPS, black, T240
Fixing bracket with tapped fixing holes M5
Weight: 122.9/123.3 g, unit: 40 pcs.
Type: 12614/12612
Ref. No.: 400917
Ref. No.: 400918 with lamp safety catch
With steel thread
Ref. No.: 536220
Ref. No.: 533432 with lamp safety catch

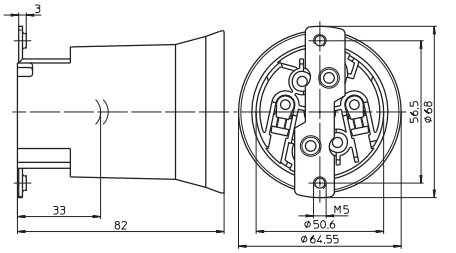



E40 lampholders
Casing: porcelain, white, T270
Oblong holes for screws M5
Weight: 224/229.3 g, unit: 48 pcs.
Type: 12800/12801
Ref. No.: 108208
Ref. No.: 107780 with lamp safety catch
With steel thread
Ref. No.: 532602
Ref. No.: 532603 with lamp safety catch

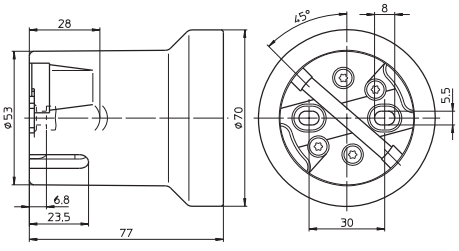



E40 lampholders
Casing: porcelain, white, T270
Fixing bracket with slots for screws M5
Weight: 252.3/243 g, unit: 48 pcs.
Type: 12810/12811
Ref. No.: 108374
Ref. No.: 108375 with lamp safety catch
With steel thread
Ref. No.: 532604
Ref. No.: 532605 with lamp safety catch

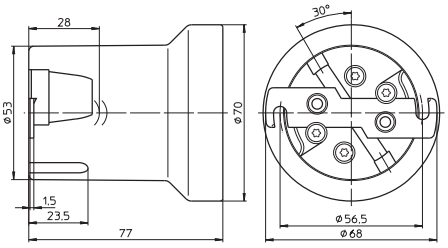



E40 lampholders
Casing: porcelain, white, T270
Fixing bracket with tapped fixing holes M5
With lamp safety catch
Weight: 252.8 g, unit: 48 pcs.
Type: 12812
Ref. No.: 108373
With steel thread
Ref. No.: 532606

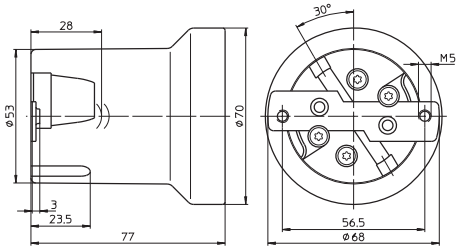



E40 lampholders
Casing: porcelain, white, T270
Oblong holes for screws M5
Weight: 220 g, unit: 48 pcs.
Type: 12500/12501
Ref. No.: 533950
Ref. No.: 533951 with lamp safety catch

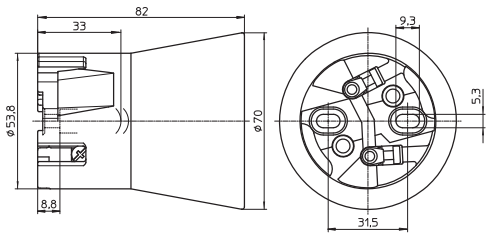



E40 lampholders
Casing: porcelain, white, T270
Fixing bracket with slots for screws M5
Weight: 240 g, unit: 48 pcs.
Type: 12510/12511
Ref. No.: 533952
Ref. No.: 533953 with lamp safety catch

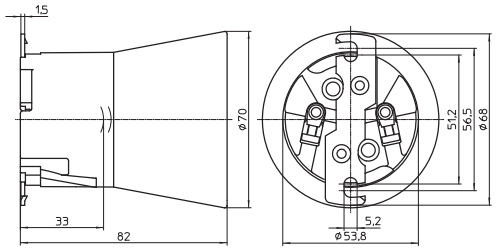



E40 lampholders
Only for lamps with base E40/E45
Casing: porcelain, white, T270
Oblong holes for screws M5
Weight: 206 g, unit: 50 pcs.
Type: 12900/12901
Ref. No.: 528252
Ref. No.: 528958 with lamp safety catch

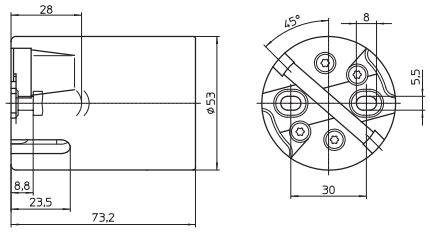



E40 lampholders
Only for lamps with base E40/E45
Casing: porcelain, white, T270
Fixing bracket with slots for screws M5
Weight: 217 g, unit: 50 pcs.
Type: 12910/12911
Ref. No.: 528253
Ref. No.: 528254 with lamp safety catch

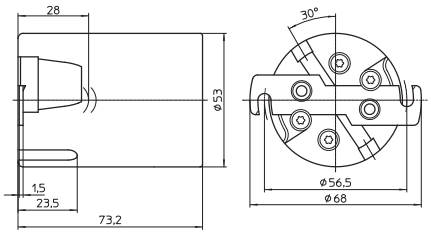



G8.5 Lampholders

For discharge lamps with base G8.5

Nominal rating: 2/500/5 kV
Multipoint contacts: CuNiZn
Fixing holes for screws M3

G8.5 lampholders
Push-in terminals for stranded conductors
with ferrule bare end of cores Ø 1.4–1.8 mm
Type: 33600 casing: LCP, black, T270
Weight: 5 g, unit: 1000 pcs.
Ref. No.: 502394
Type: 33650 casing: ceramic, T300
Weight: 12.6 g, unit: 150 pcs.
Ref. No.: 526018

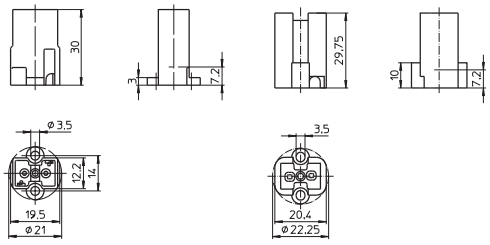



G8.5 lampholder
Casing: ceramic, T300
Welded leads: Cu tinned, stranded conductors 1 mm², Si-insulation max. Ø 3.6 mm, length: 300 mm
Weight: 26.4 g, unit: 100 pcs.
Type: 33671
Ref. No.: 535631

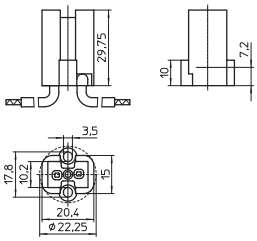



GX8.5 Lampholders, Accessories

For discharge lamps with base GX8.5

GX8.5 lampholders
Casing: LCP, cover material: LCP, T270
Nominal rating: 2/500/5kV
Push-in terminals for stranded conductors
with ferrule bare end of cores Ø 1.8 mm
Weight: 11.9/12.6, unit: 50 pcs.
Type: 34650/34651

new **Ref. No.: 547807** fixing holes for screws M3
new **Ref. No.: 547808** threaded bushes M3

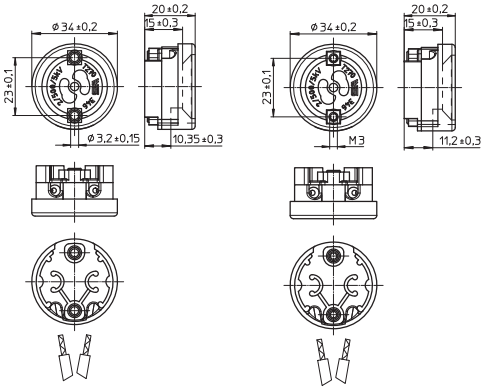





Cover cap for GX8.5 lampholders type 346
For luminaires of protection class II
Material: LCP, black
Weight: 5.4 g, unit: 50 pcs.
Type: 97685
Ref. No.: 532521

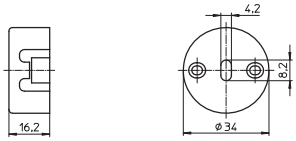

GU8.5 Lampholders

For discharge lamps with base GU8.5

GU8.5 lampholder
Casing: ceramic, cover plate: LCP
T250, nominal rating: 2/250/5 kV
Welded leads: Cu tinned, stranded conductors
1 mm², Si-insulation, white, length: 300 mm
Fixing holes for screws M3
Weight: 38 g, unit: 25 pcs.
Type:. 34700

new **Ref. No.: 544895**

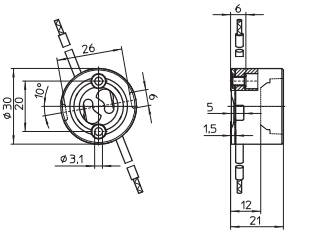



GU8.5 lampholders
Casing: ceramic, cover plate: LCP
T250, nominal rating: 2/250/5 kV
Welded leads: Cu tinned, stranded conductors
1 mm², Si-insulation, white, length: 300 mm
Identical mounting hole layout and lamp focus
like for G12 lampholder type 42200/10 offer
an effortless interchangeability of both lamp
technologies.
Weight: 51 g, unit: 25 pcs.
Type: 34720/34730

new **Ref. No.: 544896** threaded bushes M3
new **Ref. No.: 546161** fixing holes for screws M3

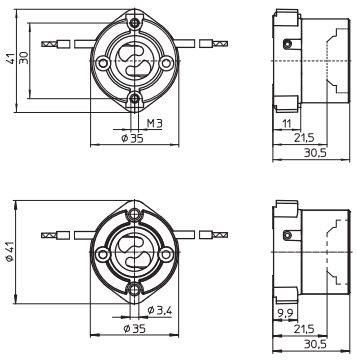



GU6.5 Lampholders

For discharge lamps with base GU6.5

Suitable for luminaries of protection class II
Casing: ceramic, cover: PPS, T250
Nominal rating: 2/250/5 kV
Leads: Cu nickel-plated, stranded conductors 0.75 mm², double PTFE-insulation, length: 250 mm

GU6.5 lampholders
Weight: 13.8 g, unit: 100 pcs.
Type: 34510 fixing holes for screws M3
Ref. No.: 533957
Type: 34511 threaded bushes for screws M3
Ref. No.: 534220

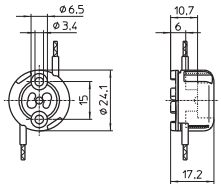



GU6.5 lampholder
Fixing holes for screws M3
Identical mounting hole layout and lamp focus of the PGJ5 lampholder 34120 offer an effortless interchangeability of both lamp technologies.
Weight: 15 g, unit: 100 pcs.
Type: 34520
Ref. No.: 539497

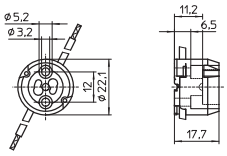



PGJ5 Lampholders

For discharge lamps with base PGJ5

Nominal rating: 2/300/2.5 kV
Fixing holes for screws M3

PGJ5 lampholders with cover plate
Casing: ceramic, cover plate: LCP, T270
Leads: Cu nickel-plated, stranded conductors
0.75 mm², PTFE-insulation, length: 250 mm
Weight: 9.2 g, unit: 100 pcs.
Type: 34105/34106
Ref. No.: 534080 lateral lead exit
Ref. No.: 534081 central lead exit

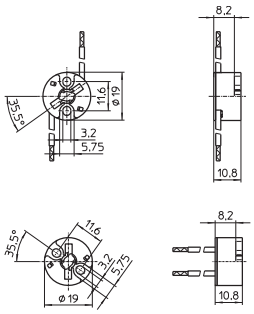



PGJ5 lampholders with cover plate
Suitable for luminaires protection class II
Casing: ceramic, cover plate: LCP, T270
Leads: Cu nickel-plated, stranded conductors
0.75 mm², double PTFE-insulation, length: 250 mm
Weight: 10.6 g, unit: 100 pcs.
Type: 34110/34111
Ref. No.: 534016 lateral lead exit
Ref. No.: 534017 central lead exit

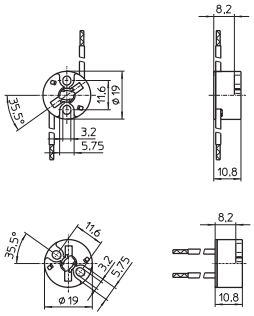

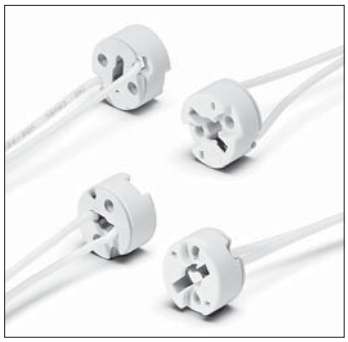

PGJ5 lampholder with cover plate
Suitable for luminaires protection class II
Casing: ceramic, cover plate: LCP, T270
Leads: Cu nickel-plated, stranded conductors
0.75 mm², double PTFE-insulation, length: 250 mm
Identical mounting hole layout and lamp focus like for GU6.5 lampholder 34520 offer an effortless interchangeability of both lamp technologies.
Weight: 11.5 g, unit: 100 pcs., type: 34120
Ref. No.: 534979

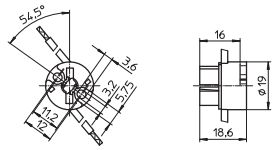



PGJ5 lampholders with cover plate
Suitable for luminaires protection class II
Casing: ceramic, cover plate: mica, T270
Leads: Cu nickel-plated, stranded conductors
0.75 mm², double PTFE-insulation, length: 250 mm
Weight: 10.8 g, unit: 100 pcs.
Type: 34150/34151
Ref. No.: 536428 lateral lead exit
Ref. No.: 536429 central lead exit

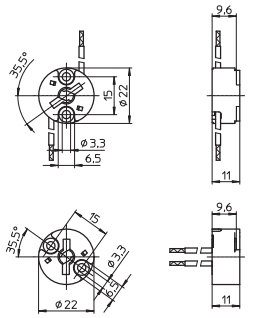



GX10 Lampholders

For discharge lamps with base GX10

GX10 lampholder, for luminaires of protection class II
Casing: PPS, black, T240, nominal rating: 2/250/5 kV
Push-in twin terminals for stranded conductors
with ferrule bare end of cores max. Ø 1.8 mm
Fixing holes for screws M3
Weight: 9 g, unit: 100 pcs.. Type: 31400
Ref. No.: 509356

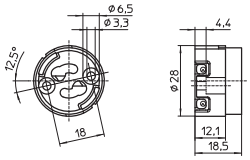



GX10 lampholder, for luminaires of protection class II
Casing: steatite, cover plate: PPS
T240, nominal rating: 2/500/5 kV
Push-in terminals for stranded conductors
with ferrule bare end of cores Ø 1.5–1.8 mm
For leads with outer diameter: max. 3 mm
Fixing holes for screws M3
Weight: 14 g, unit: 100 pcs.
Type: 31500
Ref. No.: 536469

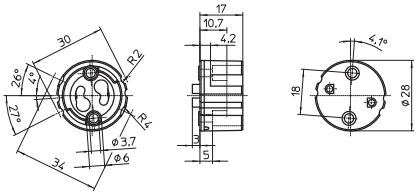



GX10 lampholder, for luminaires of protection class II
Casing: steatite, cover plate: PPS
T240, nominal rating: 2/500/5 kV
Welded leads: Cu nickel-plated, stranded conductors
0.75 mm², double PTFE-insulation, length: 250 mm
Fixing holes for screws M3
Weight: 23.3 g, unit: 100 pcs.
Type: 31530
Ref. No.: 543267

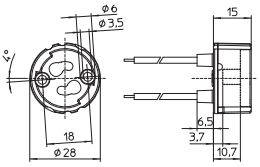

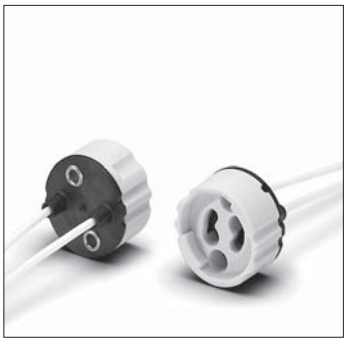

GY9.5 Lampholders

For discharge lamps with base GY9.5

GY9.5 lampholder
Casing: ceramic, cover plate: PPS, black
T240, nominal rating: 10/500/5 kV, contacts: Ni
Leads: Cu tinned, stranded conductors
5 kV: 1 mm², Si-insulation max. Ø 3.6 mm,
length: 300 mm and Cu tinned,
stranded conductors 0.75 mm², Si-insulation,
length: 300 mm
Fixing holes for screws M3
Weight: 48 g, unit: 150 pcs.
Type: 37001
Ref. No.: 533663

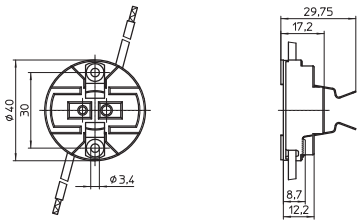



G12, GX12-1, PG12-1, PG12-2 Lampholders

For discharge lamps with base G12, GX12 and PG12

G12 lampholders
Casing: ceramic, cover plate: LCP
T250, nominal rating: 5/500/5 kV
Contacts: CrNi
Push-in terminals for leads with
ferrule bare end of cores max. Ø 1.8 mm
Weight: 30.7 g, unit: 25 pcs.
Type: 42200/ 42210
Ref. No.: 535750 fixing holes Ø 4.2 mm
Ref. No.: 535751 threaded bushes M3

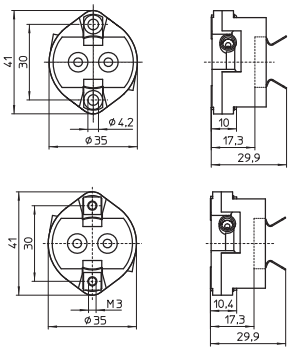



G12 lampholders
Casing: ceramic
T250, nominal rating: 5/500/5 kV
Contacts: CrNi
Welded leads: Cu tinned, stranded conductors 1 mm²
Si-insulation, white, length: 300 mm
Weight: 43/52 g, unit: 25 pcs.
Type: 42222/42242
Ref. No.: 535755 cover plate: LCP
Ref. No.: 543643 cover plate: ceramic

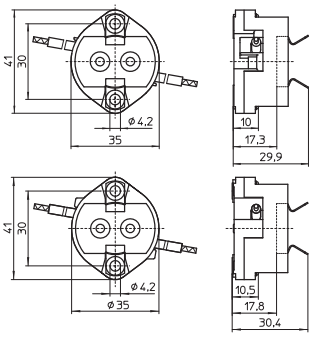

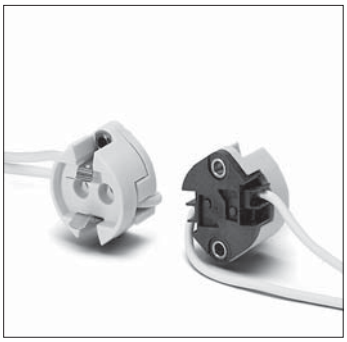

G12 lampholder
Casing: LCP, black
T250, nominal rating: 2/500/5 kV
Contacts: CrNi
Push-in terminals for leads with
ferrule bare end of cores max. Ø 1.8 mm
For tinned lead ends: 0.5–1 mm²
Fixing holes for screws M4
Weight: 13.6 g, unit: 250 pcs.
Type: 42000
Ref. No.: 509213

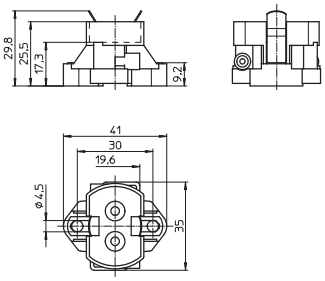



GX12-1 lampholder
Casing: ceramic, cover plate: PPS, black
T220, nominal rating: 2/500/5 kV, contacts: Ni
Welded leads: Cu tinned, stranded conductors
5 kV: 1 mm², Si-insulation, white,
N: 0.75 mm², Si-insulation, brown,
length: 300 mm
Fixing holes for screws M4
Weight: 58.5 g, unit: 25 pcs.
Type: 41900
Ref. No.: 507656

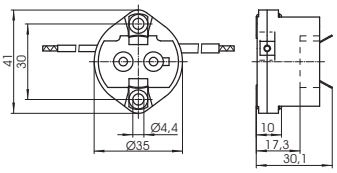



GX12-1 lampholder
Casing: LCP, black
T250, nominal rating: 2/500/5 kV
Contacts: CrNi
Push-in terminals for leads with
ferrule on bare end of core max. Ø 1.8 mm
or for tinned lead ends: 0.5–1 mm²
Fixing holes for screws M4
Weight: 13.6 g, unit: 50 pcs.
Type: 42100
Ref. No.: 509214

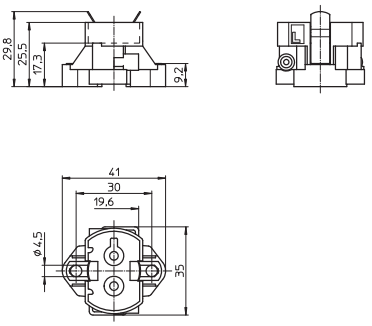



PG12-1 lampholder
Casing: PPS, black, T220
Nominal rating: 4/500/5 kV, contacts: CrNi
Push-in terminals for leads with
ferrule on bare end of core max. Ø 1.8 mm
or for tinned lead ends: 0.5–1 mm²
Fixing holes for screws M4
Weight: 20.2 g, unit: 100 pcs.
Type: 31981
Ref. No.: 505030

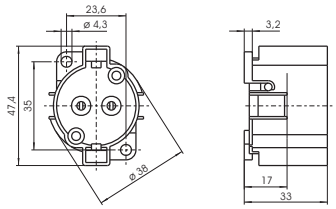

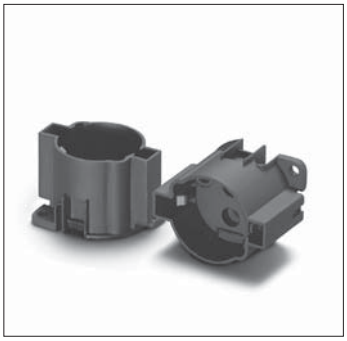

PG12-1 lampholder
For cover caps (see p. 433–435)
Casing: PPS, black, T220
Nominal rating: 4/500/5 kV, contacts: CrNi
Push-in terminals for leads with
ferrule on bare end of core max. Ø 1.8 mm
or for tinned lead ends: 0.5–1 mm²
Fixing holes for screws M3
Weight: 23 g, unit: 100 pcs.
Type: 31980
Ref. No.: 505029

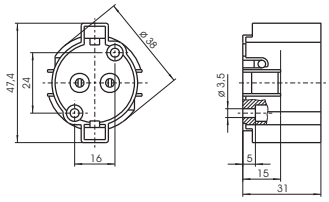

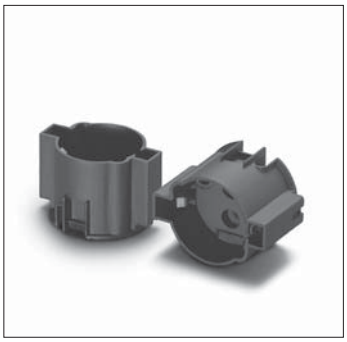

RX7s Lampholders

If the central hole on the bracket is used for fixing it has to be ensured by an additional support within the luminaire that the bracket cannot be deformed. If the lampholders are used for lamps with ignition voltage max. 20 kV the luminaire manufacturer is responsible for sufficient creepage distances and clearances.

Remark on lampholders type 323 and 343:
The luminaire design must ensure protection from electric shock as well as sufficient creepage distances and clearances from live parts on the back of lampholder.

Type 343:
With doubled insulated leads suitable for luminaires of protection class II

RX7s lampholders
Contact pin: Ni, nominal rating: 2/500/5 kV
Lead: Cu tinned, stranded conductors 1 mm²,
Si-insulation max. Ø 3.6 mm, length: 300 mm
Fixing holes for screws M4
Weight: 23.3/20.1 g, unit: 25 pcs.
Type: 31662/31672 PPS, black, T220
Ref. No.: 107065 lead exit right
Ref. No.: 107066 lead exit left
Type: 31695/31696 LCP, black, T270
Ref. No.: 504416 lead exit right
Ref. No.: 504669 lead exit left

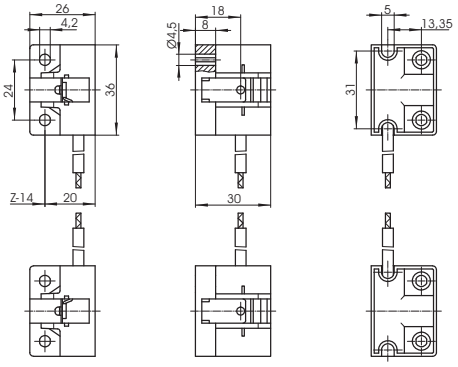

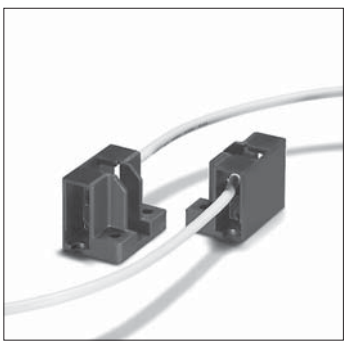

RX7s lampholder
Casing: PPS, black, T220
Contact pin: Cu, silver bulb
Nominal rating: 2/250/5 kV
Lead: Cu tinned, stranded conductors 1 mm², Si-insulation max. Ø 3.6 mm, length: 200 mm
With screw M4
Weight: 14 g, unit: 300 pcs.
Type: 34301
Ref. No.: 509117

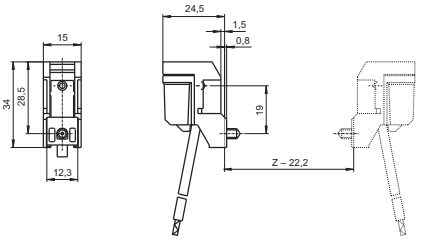



RX7s lampholder
Casing: PPS, black, T220
Contact pin: Cu, silver bulb
Nominal rating: 2/250/5 kV
Leads: Cu tinned, stranded conductors 1 mm², Si-insulation max. Ø 3.6 mm, length: 200 mm
Oblong holes for screws M4
Central hole for screw M4
Other bracket versions on request
Weight: 43.8 g, unit: 200 pcs.
Type: 34311 contact distance 114.2 mm
Ref. No.: 529841

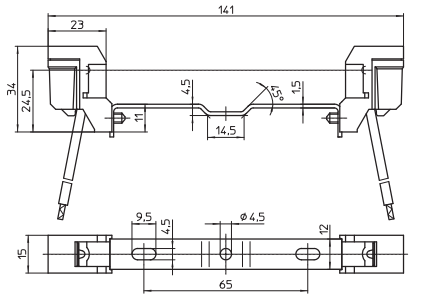

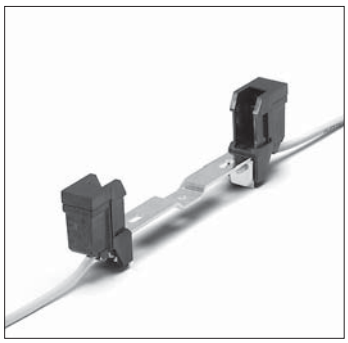

RX7s lampholder
Casing: PPS, black, T220
Contact pin: Cu, silver bulb
Nominal rating: 2/250/5 kV
Leads: Cu tinned, stranded conductors 1 mm², Si-insulation max. Ø 3.6 mm, length: 200 mm
Oblong holes for screws M4
Central tapped hole M4
Weight: 47.5 g, unit: 200 pcs.
Type: 34326 contact distance: 132 mm
Ref. No.: 529845

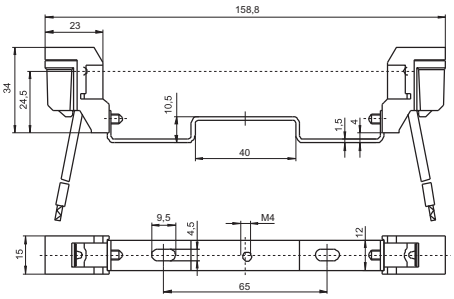

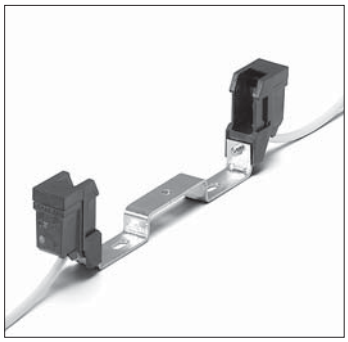

Partly enclosed RX7s lampholder
Casing: ceramic, T350
Contact pin: Cu, silver bulb
Nominal rating: 4/1000/5 kV
Lead: Cu tinned, stranded conductors 1 mm², Si-insulation max. Ø 3.6 mm, length: 200 mm
Fixing screw M4
Weight: 26.2 g, unit: 300 pcs.
Type: 32301
Ref. No.: 100913

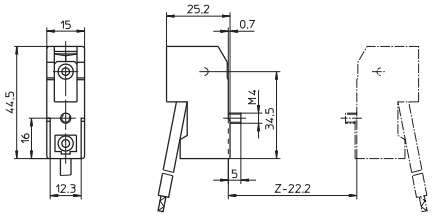



Partly enclosed RX7s lampholder
Casing: ceramic, T350
Contact pin: Cu, silver bulb
Nominal rating: 4/1000/5 kV
Leads: Cu tinned, stranded conductors 1 mm², Si-insulation max. Ø 3.6 mm, length: 200 mm
Oblong holes for screws M4
Central hole for screw M4
Weight: 74.8 g, unit: 200 pcs.
Type: 32311 contact distance: 114.2 mm
Ref. No.: 100921

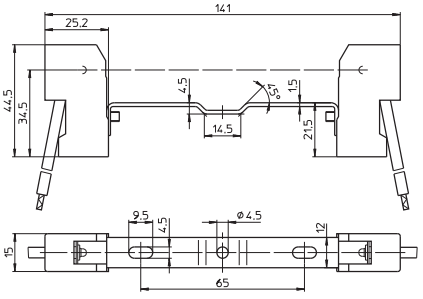

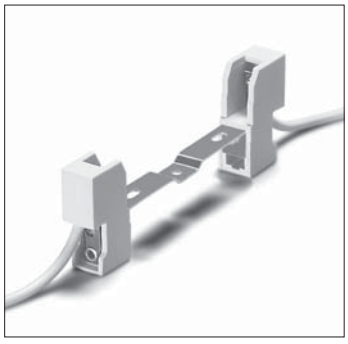

Partly enclosed RX7s lampholder
Casing: ceramic, T350
Contact pin: Cu, silver bulb
Nominal rating: 4/1000/5 kV
Leads: Cu tinned, stranded conductors 1 mm², Si-insulation max. Ø 3.6 mm, length: 200 mm
Oblong holes for screws M4
Central tapped holes M4
Weight: 76 g, unit: 200 pcs.
Type: 32321 contact distance: 114.2 mm
Ref. No.: 100922

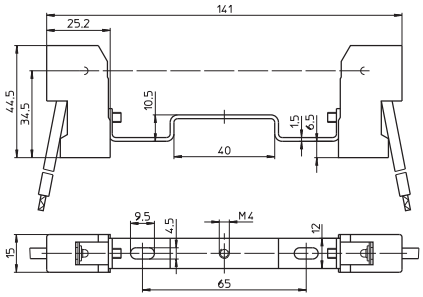

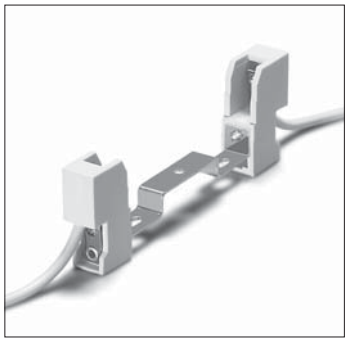

Partly enclosed RX7s lampholder
Casing: ceramic, T350
Contact pin: Cu, silver bulb
Nominal rating: 4/1000/5 kV
Leads: Cu tinned, stranded conductors 1 mm², Si-insulation max. Ø 3.6 mm, length: 200 mm
Oblong holes for screws M4
Central hole for screw M4
Weight: 74 g, unit: 200 pcs.
Type: 32341 contact distance: 114.2 mm
Ref. No.: 100932

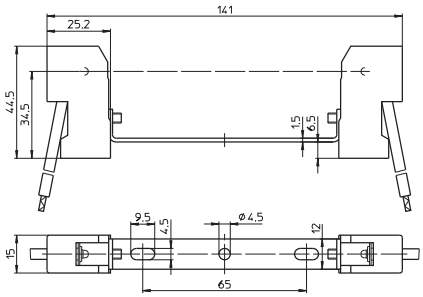

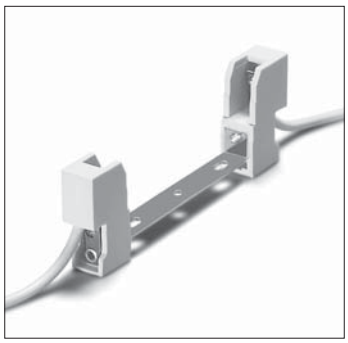

Partly enclosed RX7s lampholder
Casing: ceramic, T350
Contact pin: Cu, silver bulb
Nominal rating: 4/1000/5 kV
Leads: Cu tinned, stranded conductors 1 mm², Si-insulation max. Ø 3.6 mm, length: 200 mm
Oblong holes for screws M4
Central hole for screw M5
Weight: 75.5 g, unit: 200 pcs.
Type: 32361 contact distance: 114.2 mm
Ref. No.: 100934

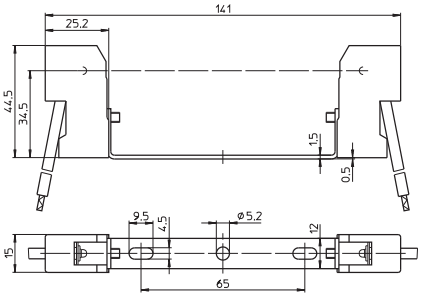

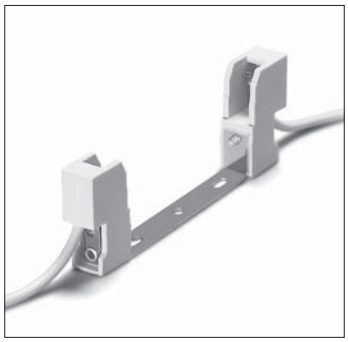

Partly enclosed RX7s lampholder
Casing: ceramic, T350
Contact pin: Cu, silver bulb
Nominal rating: 4/1000/5 kV
Leads: Cu tinned, stranded conductors 1 mm², Si-insulation max. Ø 3.6 mm, length: 200 mm
Oblong holes for screws M4
Central hole for screw M5
Weight: 76.4 g, unit: 200 pcs.
Type: 32381 contact distance: 114.2 mm
Ref. No.: 100937

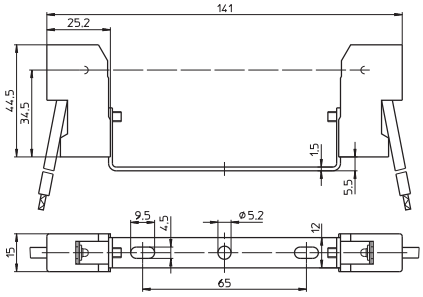

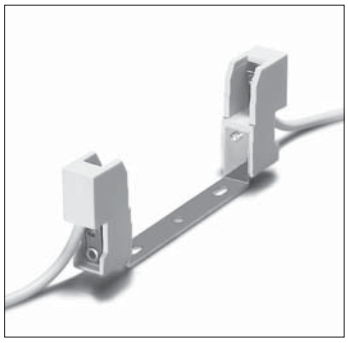

Partly enclosed RX7s lampholder
Casing: ceramic, T350
Contact pin: Cu, silver bulb
Nominal rating: 4/1000/5 kV
Leads: Cu tinned, stranded conductors 1 mm², Si-insulation max. Ø 3.6 mm, length: 200 mm
Oblong holes for screws M4
Central tapped hole M4
Weight: 78.3 g, unit: 200 pcs.
Type: 32326 contact distance: 132 mm
Ref. No.: 100925

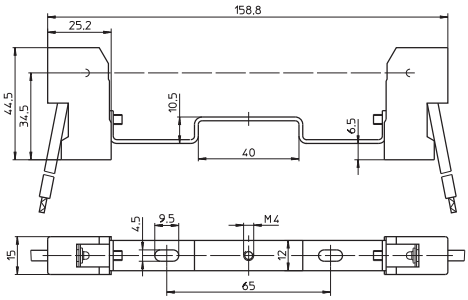

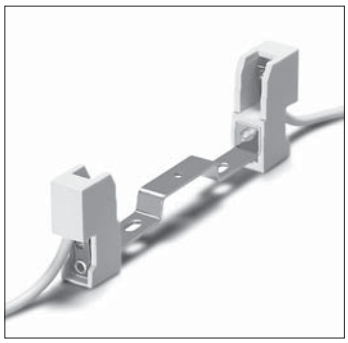

Partly enclosed RX7s lampholder
Casing: ceramic, T350
Contact pin: Cu, silver bulb
Nominal rating: 4/1000/5 kV
Leads: Cu tinned, stranded conductors 1 mm², Si-insulation max. Ø 3.6 mm, length: 200 mm
Oblong holes for screws M4
Central hole for screw M5
Weight: 77.6 g, unit: 200 pcs.
Type: 32330 contact distance: 132 mm
Ref. No.: 100928

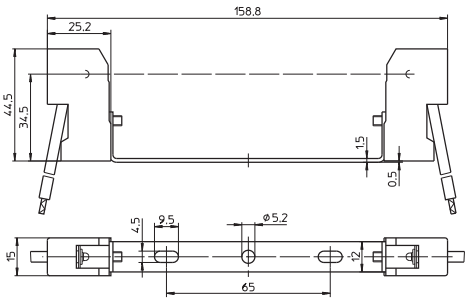

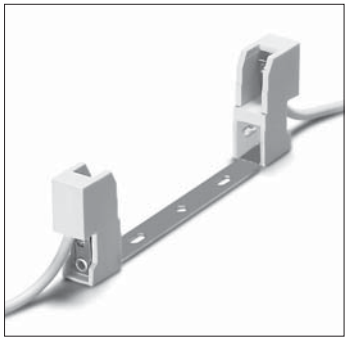

Partly enclosed RX7s lampholder
Casing: ceramic, T350
Contact pin: Cu, silver bulb
Nominal rating: 4/1000/5 kV
Leads: Cu tinned, stranded conductors 1 mm², Si-insulation max. Ø 3.6 mm, length: 200 mm
Oblong holes for screws M4
Central hole for screw M5
Weight: 75.7 g, unit: 200 pcs.
Type: 32336 contact distance: 132 mm
Ref. No.: 100931

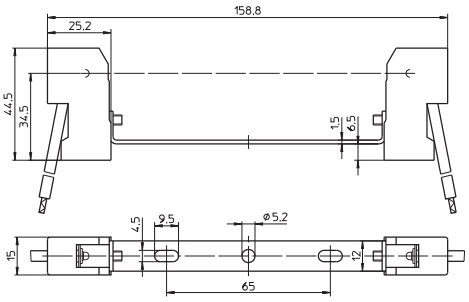

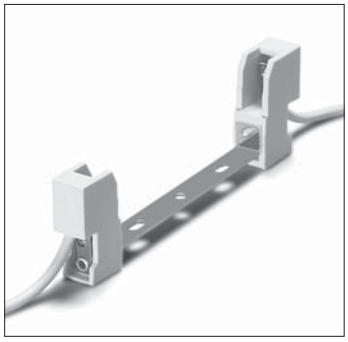

Protection caps for RX7s lampholders
For push-fit onto lampholders type 323
Protection against electrical shock
on the rear side of the lampholder
Lampholders with assembled protection cap
on request
Weight: 0.7/0.6 g, unit: 1000 pcs.
Type: 97528
Ref. No.: 507592 LCP, natural
Ref. No.: 507593 PET, white

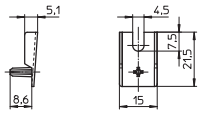

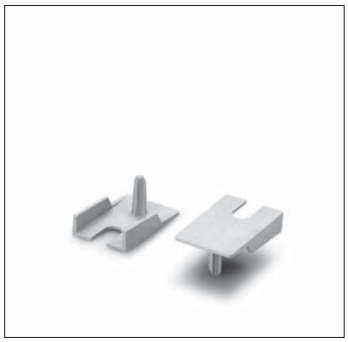

RX7s lampholder
Casing: ceramic, T250
Contact pin: Ni
Nominal rating: 10/500/5 kV
Lead: Cu tinned, stranded conductors 1 mm², Si-insulation max. Ø 3.6 mm, length: 300 mm
Fixing holes for screws M4
Weight: 72 g, unit: 25 pcs.
Type: 30602
Ref. No.: 100723

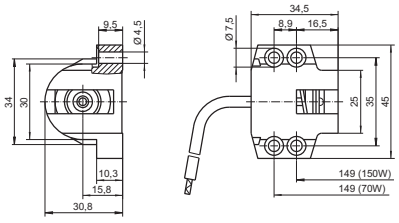



RX7s lampholder
Casing: ceramic, T250, contact pin: Ni
Nominal rating: 10/500/20 kV
Lead: Cu tinned, stranded conductors 1 mm², Si-insulation with spun glass filler Ø 7 mm, for ignition voltage: max. 20 kV, length: 1000 mm
Fixing holes for screws M4
Weight: 120 g, unit: 25 pcs.
Type: 30620
Ref. No.: 100741

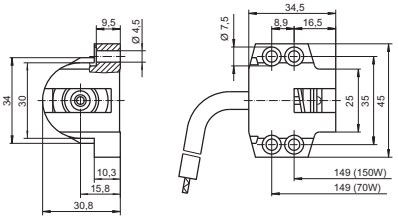

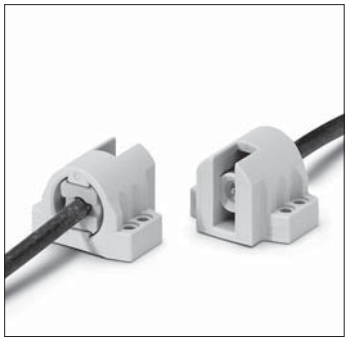

Fc2 Lampholders

For discharge lamps with base Fc2

If the lampholders are used for lamps with ignition voltage max. 20 kV the luminaire manufacturer is responsible for sufficient creepage distances and clearances.

Fc2 lampholder
Casing: ceramic, T250
Nominal rating: 10/500/5 kV
Contacts: Ni
Lead: Cu tinned, stranded conductors 1 mm²,
Si-insulation max. Ø 3.6 mm, length: 300 mm
Fixing holes for screws M4
Weight: 100 g, unit: 200 pcs.
Type: 02500
Ref. No.: 108937

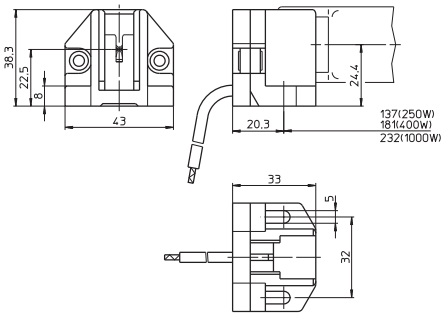

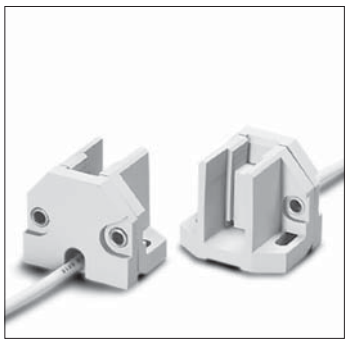

Fc2 lampholder
Casing: ceramic, T250
Nominal rating: 10/250/5 kV, contacts: Ni
Lead: Cu tinned, stranded conductors 1 mm²,
Si-insulation max. Ø 3.6 mm, length: 300 mm
Fixing screws M4, captive
Weight: 102 g, unit: 25 pcs.
Type: 02574 rigid fixing
Ref. No.: 100096

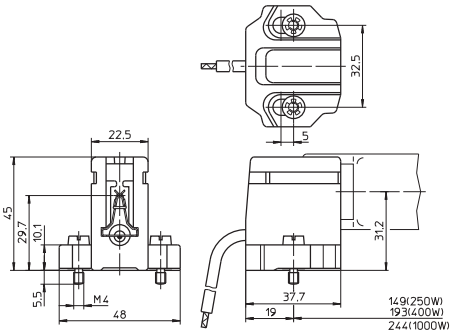

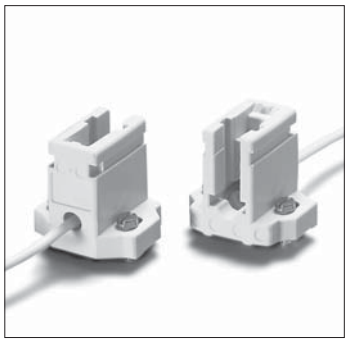

Fc2 lampholder
Casing: ceramic, T250
Nominal rating: 10/250/5 kV, contacts: Ni
Lead: Cu tinned, stranded conductors 1 mm²,
Si-insulation max. Ø 3.6 mm, length: 300 mm
Fixing screws M4, captive
Weight: 102 g, unit: 25 pcs.
Type: 02575 adjustable fixing
Ref. No.: 100098

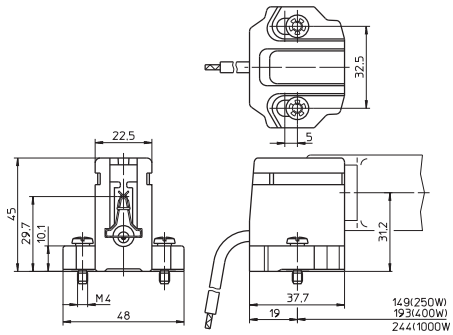

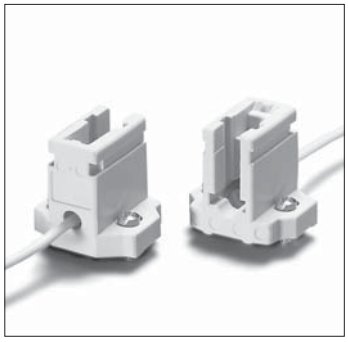

Fc2 lampholder
Casing: ceramic, T250
Nominal rating: 10/250/20 kV, contacts: Ni
Lead: Cu tinned, stranded conductors 1 mm²,
Si-insulation with spun glass filler Ø 7 mm,
for ignition voltage: max. 20 kV,
length: 500 mm
Fixing screws M4, captive
Weight: 120 g, unit: 25 pcs.
Type: 02525 rigid fixing
Ref. No.: 100082

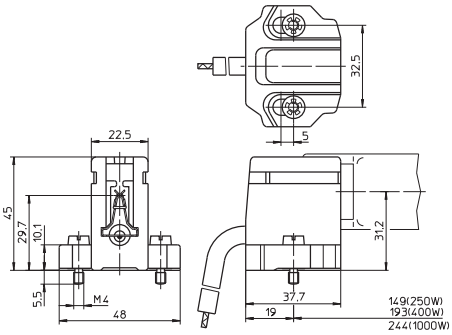

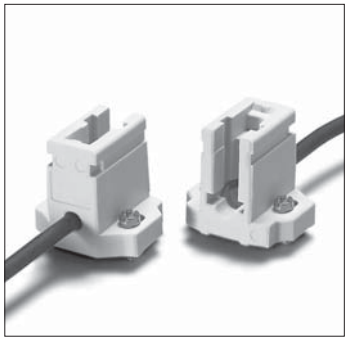

Fc2 lampholder
Casing: ceramic, T250
Nominal rating: 10/250/20 kV, contacts: Ni
Lead: Cu tinned, stranded conductors 1 mm²,
Si-insulation with spun glass filler Ø 7 mm,
for ignition voltage: max. 20 kV,
length: 500 mm
Fixing screws M4, captive
Weight: 120 g, unit: 25 pcs.
Type: 02543 adjustable fixing
Ref. No.: 100086

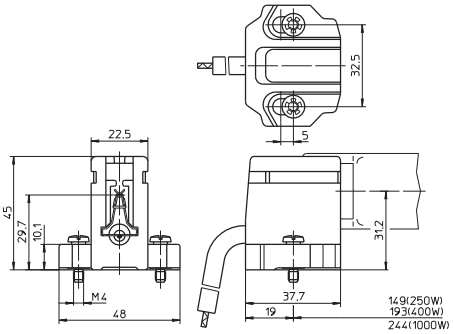

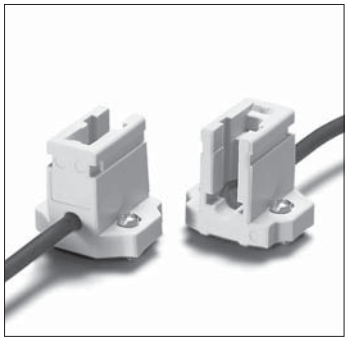

Lamp safety catch
For push-fit onto the lampholders 100082,
100086, 100096 and 100098
Casing: ceramic
Spring: stainless steel
Weight: 21 g, unit: 50 pcs.
Type: 86037
Ref. No.: 103818

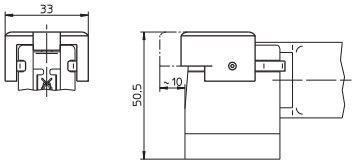

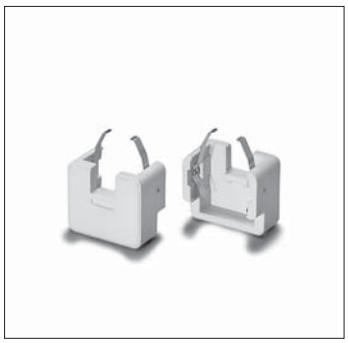

K12x30s Lampholders

For discharge lamps with base K12x30s

K12x30s lampholders
Suitable for luminaires of protection class II
Casing: LCP, black, T150
Nominal rating: 4/500/3 kV
Contacts: CuSn6, silver plated
Leads: Cu tinned, stranded conductors 1 mm²
Si-insulation, doubled insulated
Rear recess M4, wrench size 7
Rear and bottom fixing holes for screws M5
Weight: 75.9/61.5 g, unit: 100 pcs.
Type: 13010
Ref. No.: 532430 lead length: 705 mm
Ref. No.: 532431 lead length: 155 mm

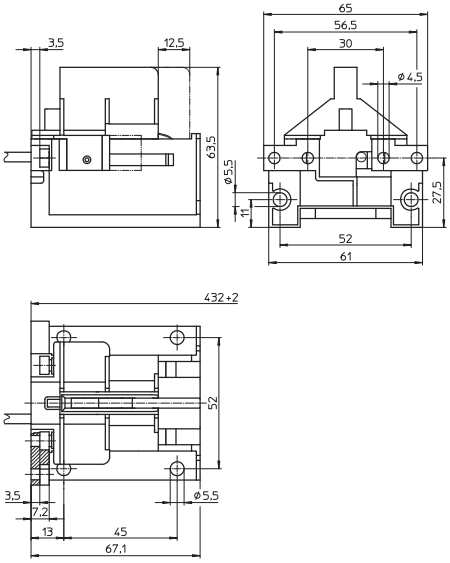

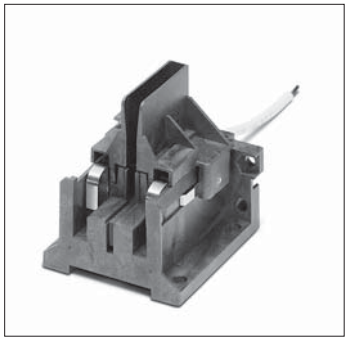

K12s-7 Support

For metal halide lamps 1000 and 2000 W
Type Osram HQI TS and Radium HRI TS

The luminaire design must ensure protection from electric shock as well as sufficient creepage and clearance distances.

K12s-7 support
Cable connection on cable lug for lead 0.75–2.5 mm²
Casing: ceramic, T300
Support: stainless steel, heat-resistant
Oblong holes for screws M5
Weight: 70 g, unit: 25 pcs.
Type: 21100
Ref. No.: 107677

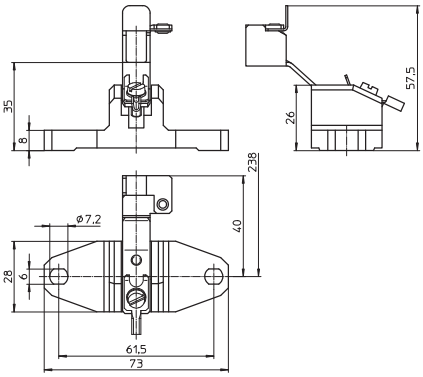



3 Components for Discharge Lamps

Electronic ballasts **185**
Assembly instructions for mounting and installing 186–190
Circuit diagrams 191

Electromagnetic ballasts **191**
Power reduction 191–192
Assembly instructions for mounting and installing 196–199

Electromagnetic control gear units **193**
Assembly instructions for mounting and installing 193–196

Circuit diagrams – Electromagnetic ballasts **200–202**

Lampholders for high-pressure sodium lamps **203–204**

Ignitors **204–206**
Assembly instructions for mounting and installing 207–209

Power switches **210–212**

Switch units **212–213**

Lamp table **214–224**

Energy efficiency classification **255**

General technical details **533–540**

Glossary **541–543**

If the electrical current through a discharge lamp is increased, a discharge channel with very high luminous efficiency is created in the discharge chamber. Luminous flux and light output increase substantially. The internal pressure of the discharge chamber rises and attains between 1 and 10 bar – these are so-called high-pressure discharge lamps or simply discharge lamps. The light output and colour rendition of high-pressure lamps vary considerably depending on the lamp family.

Discharge lamps can only be operated with ballasts. Ignitors are additionally required for sodium lamps and metal halide lamps. Furthermore, to compensate blind current when using magnetic ballasts, compensation capacitors must be fitted. The lampholders enable the lamp to be fixed in the luminaire and ensure simple exchange of lamps at the end of their service life.

As well as stabilising the lamp's operating point, ballasts also influence the lamp's output and luminous flux, the system's light output, the service life of the lamps as well as the colour temperature of the light.

The following chapters provide technical information regarding VS components for

- High-pressure sodium lamps (HS lamps)
- Metal halide lamps (HI lamps)
- Metal halide lamps with a ceramic discharge tube (C-HI lamps)
- Mercury vapour lamps (HM lamps)
- Low-pressure sodium lamps (LS lamps)

Electromagnetic or electronic ballasts can be used for high-pressure discharge lamps. Unlike with fluorescent lamps, lamp efficiency is not decisively altered by the use of electronic ballasts. In contrast, electronic ballasts lead to a reduction of the inherent losses and thus to an increase in system efficiency. In addition, electronic ballasts ensure gentle lamp operation, which increases the lamp's service life.

Independent electronic and electromagnetic ballasts have also been developed, which in the form of control gear units then provide special advantages during application.

Electronic Ballasts for HI and C-HI Lamps

Electronic ballasts are fitted with all the components required to operate discharge lamps.
Furthermore, they safely shut down lamps at the end of their service life to prevent high temperatures from being generated within the luminaires that could influence the service life of the luminaires and components.

By adding a strain-relief module, VS electronic built-in ballasts turn into independent operating devices that can, for instance, be used as a power unit and can also be installed in intermediate ceilings in this form.

MidNight – Multi-Step Dimming

The MidNight concept is based on independent dimmable ballasts that can be locally or remotely programmed to any desired dimming scenario.

The simplicity of MidNight makes it a most innovative solution for street lighting as there is no need to install complex systems.

The remote reconfiguration capabilities allow for various dimming scenarios before leaving the production site, or at any given time after installation at the site.

DALI

The EHXd-DALI provides advanced functionality and makes it the perfect fit for current and future indoor and street lighting applications.

Standardisation Ballasts fully comply with the new DALI IEC 62386 standard.

Extensive protocol (optional)
Advanced control and monitoring commands that comply with Part X.203 of the DALI standard.

Various DALI devices
Compliance with all standard DALI controllers and device as well as all Lonmark® DALI devices.

Super-low communication-noise mechanism
Years of working with various DALI nodes in the market have positioned the EHXd-DALI as a device that causes one of the lowest degrees of communication interference.

Up-to-date and debugged
Ballast firmware can be upgraded remotely (using the DALI terminals).

Assembly Instructions for Electronic Ballasts

Assembly instructions for mounting and installing electronic ballasts for high-pressure discharge lamps

Mandatory regulations

DIN VDE 0100 Erection of low voltage installations

EN 60598-1 Luminaires – part 1: general requirements and tests

EN 61347-1 Operating devices for lamps – part 1: general and safety requirements

EN 61347-2-12 Control gear for lamps; part 2-12: Particular requirements for d.c. or a.c. supplied electronic ballasts for discharge lamps (excluding fluorescent lamps)

EN 55015 Limits and methods of measurement of radio disturbance characteristics of electrical lighting and similar equipment

EN 61000-3-2 Electromagnetic Compatibility (EMC) – part 3: maximum values – main section part 2: maximum values for mains harmonics (device input current up to and including 16 A per conductor)

EN 61547 Installations for general lighting purposes – EMC immunity requirements

Descriptions of VS EBs for discharge lamps

The type designations for VS HID ballasts all follow the same pattern, as follows:

EHXc	70	.326
Electronic ballast for HID lamps	Wattage	Serial number

Mechanical mounting

Surface — Firm, flat surface required to ensure good heat transfer. Avoid mounting on protruding surfaces.

Mounting location — Electronic ballasts must be protected against moisture and heat. Installation in outdoor luminaires: water protection rate of > 4 (e.g. IP54 required).

Fastening — Using M4 screws in the designated holes

Heat transfer — If the ballast is destined for installation in a luminaire, sufficient heat transfer must be ensured between the electronic ballast and the luminaire casing. Electronic ballasts should be mounted with the greatest possible clearance to heat sources or lamps. During operation, the temperature measure at the ballast's t_c point must not exceed the specified maximum value.

Supplement for independent electronic ballasts

Mounting position Any

Clearance — Min. of 0.10 m from walls, ceilings and insulation
Min. of 0.10 m from further electronic ballasts
Min. of 0.25 m from sources of heat (lamp)

Surface — Solid; EB must not be allowed to sink into insulation materials

Technical specifications

Type	Operating voltage range AC: 220 V...240 V	Protective conductor mA	Mean service life*** hrs.	Power factor λ	Temperature protection*	Possible no. of VS devices/automatic cut-out type B (10A)	B (16A)	C (10A)	C (16A)
Standard EB									
EHXc 20.329	+6 -10%	≤ 0.5	50,000 (t_c 75 °C)	> 0.9	yes	11	18	18	30
EHXc 35.325 (183033;183034)	±10%	≤ 0.5	32,000 (t_c 85 °C)	≥ 0.95	yes**	7	12	12	20
			40,000 (t_c 80 °C)						
			50,000 (t_c 75 °C)						
EHXc 35.325 (183035)	±10%	≤ 0.5	32,000 (t_c 80 °C)	≥ 0.95	yes	7	12	12	20
			40,000 (t_c 75 °C)						
			50,000 (t_c 70 °C)						
EHXc 35G.327	+6 -10%	≤ 0.5	30,000 (t_c 80 °C)	> 0.95	yes	7	12	12	20
EHXc 35.339	±10%	≤ 0.5	50,000 (t_c 70 °C)	≥ 0.95	yes	7	12	12	20
EHXe 35.356	±10%	≤ 0.5	30,000 (t_c 80 °C)	≥ 0.95	yes	7	12	12	20
EHXc 235.316	+6 -10%	≤ 0.5	50,000 (t_c 70 °C)	> 0.98	yes	7	12	12	20
EHXc 50.358	±10%	≤ 0.5	40,000 (t_c 80 °C)	> 0.95	yes**	7	12	12	20
EHXc 50.359	±10%	≤ 0.5	30,000 (t_c 75 °C)	> 0.95	yes	7	12	12	20
EHXc 70.326 (183036; 183037)	±10%	≤ 0.5	32,000 (t_c 80 °C)	≥ 0.95	yes**	7	12	12	20
			40,000 (t_c 75 °C)						
			50,000 (t_c 70 °C)						
EHXc 70.326 (183038)	±10%	≤ 0.5	26,000 (t_c 75 °C)	≥ 0.95	yes	7	12	12	20
			40,000 (t_c 65 °C)						
			50,000 (t_c 60 °C)						
EHXc 70.340	±10%	≤ 0.5	30,000 (t_c 80 °C)	> 0.95	yes	7	12	12	20
			50,000 (t_c 70 °C)						
EHXe 70.357	±10%	≤ 0.5	30,000 (t_c 75 °C)	≥ 0.95	yes	7	12	12	20
EHXc 270.317	+6 -10%	≤ 0.5	50,000 (t_c 70 °C)	> 0.98	yes	4	7	7	12
EHXc 100.353	±10%	< 2	50,000 (t_c 70 °C)	> 0.95	yes	4	6	6	11
EHXc 150G.334	+6 -10%	≤ 0,5	50,000 (t_c 75 °C)	> 0.98	yes	5	8	8	14

* The devices are fitted with a temperature switch to protect against impermissible overheating.
Once the device has cooled down, it is switched on again. It may prove necessary to briefly dis- and then reconnect the device to the mains voltage.
** The temperature protection inside the luminaire must be checked when using devices without a cap.
*** To achieve the mean service life, the max. temperature ($t_{c\ max.}$) at the t_c point must not be exceeded; failure rate = 0.2% per 1000 hrs

Type	Operating voltage range AC: 220 V...240 V	Protective conductor mA	Mean service life*** hrs.	Power factor λ	Temperature protection*	Possible no. of VS devices/automatic cut-out type B (10A)	B (16A)	C (10A)	C (16A)
Dimmable DALI EB									
EHXd 50.360	±10%	≤ 0.5	50,000 (t_c 80 °C)	≥ 0.98	yes	30	47	30	47
EHXd 70.361	±10%	≤ 0.5	50,000 (t_c 80 °C)	≥ 0.98	yes	22	35	22	35
EHXd 100.362	±10%	≤ 0.5	50,000 (t_c 75 °C)	≥ 0.98	yes	15	24	15	24
EHXd 150.363	±10%	≤ 0.5	50,000 (t_c 75 °C)	≥ 0.98	yes	10	16	10	16
EHXd 250.364	±10%	≤ 0.5	50,000 (t_c 65 °C)	≥ 0.98	yes	6	10	6	10
Dimmable MidNight EB									
EHXd 50.365 M	±10%	≤ 0.5	50,000 (t_c 80 °C)	≥ 0.98	yes	30	47	30	47
EHXd 70.366 M	±10%	≤ 0.5	50,000 (t_c 80 °C)	≥ 0.98	yes	22	35	22	35
EHXd 100.367 M	±10%	≤ 0.5	50,000 (t_c 75 °C)	≥ 0.98	yes	15	24	15	24
EHXd 150.368 M	±10%	≤ 0.5	50,000 (t_c 75 °C)	≥ 0.98	yes	10	16	10	16
EHXd 250.369 M	±10%	≤ 0.5	50,000 (t_c 65 °C)	≥ 0.98	yes	6	10	6	10

* The devices are fitted with a temperature switch to protect against impermissible overheating.
Once the device has cooled down, it is switched on again. It may prove necessary to briefly dis- and then reconnect the device to the mains voltage.
** The temperature protection inside the luminaire must be checked when using devices without a cap.
*** To achieve the mean service life, the max. temperature ($t_{c\ max.}$) at the t_c point must not be exceeded; failure rate = 0.2% per 1000 hrs

Product features

Shutdown of defective lamps

In the event of a lamp failing to ignite or of a lamp with an increased operating voltage (end of the lamp's service life), the electronic ballast will switch off after a defined period of time (< 20 minutes). The ballast will also shut down if the lamp fails to attain its specified rated output. The ballast can be reset by disconnecting and then reconnecting the mains voltage. The ballast must always be disconnected from the mains prior to changing a lamp.

EOL Effect

In high-pressure discharge lamps, the EOL effect manifests itself in a change of the lamp's voltage. These changes can, for instance, occur due to unsealed parts of the burner or the rectifier effect. An automatic EOL cut-out prevents safety risks at the end of the service life of high-pressure discharge lamps. EOL tests are conducted to check the behaviour of electronic ballasts at the end of a lamp's service life. The EOL cut-out stops the lamp base overheating at the end of a lamp's service life.

Short-circuit resistance

The ballast outputs (to the lamp) are short-circuit-proof. Short-circuits between the lamp connection and the casing (earth conductor) will destroy the ballast.

Temperature protection

To prevent excess temperatures, some ballasts are fitted with temperature protection. A ballast will restart after it has cooled down. It might be necessary to briefly interrupt the supply voltage. The table on page 187/188 contains a list of temperature-protected devices.

Transient mains peak protection

Values are in compliance with EN 61547 (interference immunity).

Electrical installation

Wiring

- The wiring between the mains, electronic ballast and lamp must comply with the respective circuit diagram. Note: the luminaire casing (metal) must be connected to the earth conductor.
- The electronic ballast must be earthed using a toothed washer or similar (protection class I, compliance with RFI/BCI standards).
- To ensure compliance with RFI suppression limits, mains conductors should not be wired parallel to lamp conductors and maximum clearance should be ensured.
- After the installation of electronic ballasts, luminaires must be tested to ensure compliance with maximum values laid down in EN 55015.

It is permissible to connect the protective conductor of the ballast by attaching the ballast to metal conductors that are connected to the protective conductor. In doing so, care must be taken to ensure the protective conductor is contacted in accordance with EN 60598. If, however, a ballast is fitted with a connection terminal for a protective conductor without through-wiring and if this is to be used to connect the protective conductor, this connection terminal may only be used for the ballast itself.

Push-in terminals

The used terminals can be connected using rigid or flexible conductors with a section of 0.75–2.5 mm² (K35 ballasts: 0.5–1.5 mm²). The stripped conductor length is 10–11 mm (K35 ballasts: 8.5–9.5 mm, K40/41 and M42/M45 ballasts: 5–6 mm) for terminal grid 3.5 mm. Conductors must not be tin-plated.

Error current

Impulse-resistant leak-current protection must be installed. Distribute the luminaires to phases L1, L2 and L3; install tri-phase FI switches. If permissible, install FI switches with 30 mA leak current; connect no more than 15 luminaires as FI switches can be triggered at half the leak current value.

Tri-phase connection of luminaires with EB

- Prior to operating newly installed lighting systems: check the mains voltage is appropriate to the electronic ballast's mains voltage range (AC, DC).
- The N-type conductor must be properly connected to all luminaires or ballasts.
- Conductors can only be connected or disconnected if the ballast is disconnected from the mains. Attention: N-type conductors must never be disconnected individually or as the first element.
- Insulation resistance test: from L to PE (L and N must not be connected)
- The neutral conductor must be reconnected after completion of the test.

Electromagnetic Compatibility (EMC)

Vossloh-Schwabe's electronic ballast range was developed in accordance with valid EMC standards (interference, interference immunity and mains harmonics) and specially designed to ensure safe compliance with the limiting values. It is assumed that any remarks regarding conductor wiring and conductor length in the instructions for installing electronic ballasts in luminaires or for independent ballasts will be observed.

Compensation

Luminaires with electronic ballasts do not need compensation (power factor ≥ 0.95).

Selection of automatic cut-outs

Dimensioning automatic cut-outs

High transient currents occur when an EB is switched on because the capacitors have to load. Lamp ignition occurs almost simultaneously.This also causes a simultaneous high demand for power. These high currents when the system is switched on put a strain on the automatic conductor cut-outs, which must be selected and dimensioned to suit.

Release reaction

The release reaction of the automatic conductor cut-outs comply with VDE 0641, part 11, for B, C characteristics.

No. of electronic ballasts (see table on page 187/188)

The maximum number of VS ballasts applies to cases where the devices are switched on simultaneously. Specifications apply to single-pole fuses. The number of permissible ballasts must be reduced by 20% for multi-pole fuses. The considered circuit impedance equals 400 mΩ (approx. 20 m [2.5 mm²] of conductor from the power supply to the distributor and a further 15 m to the luminaire). Doubling circuit impedance to 800 mΩ increases the possible number of ballasts by 10%.

Additional information

Information on the installation of electronic ballasts for optimising EMC. To ensure good radio interference suppression and the greatest possible operating safety, the following points should be observed when installing electronic ballasts:

- Conductors between the EB and the lamp (HF conductors) must be kept short (reduction of electromagnetic interference).
- Mains and lamp conductors must be kept separate and if possible should not be laid in parallel to one another. The distance between HF and mains conductors should be as large as possible, ideally > 5 cm. (This prevents the induction of interference between the mains and lamp conductors.)
- The mains conductor within the luminaire must be kept short (to reduce the induction of interference).
- Devices must be properly earthed. EBs require secure contacts to the luminaire casing or must be earthed using a PE connection. This PE connection should be effected using an independent conductor to achieve better dissipation of the leak current. EMC improves at frequencies greater than 30 MHz.
- The mains conductor must not be laid too close to the EB or the lamp (this is especially important in the event of through-wiring).
- Mains and lamp conductors must not be crossed. Should this be impossible to avoid, conductors should be crossed at right angles to one another if at all possible.
- Should conductors be wired through metal parts, such conductors must always be additionally shielded (e.g. with an insulating sleeve or grommet).

Temperature

Reference point temperature t_c

The safe operation of electronic ballasts is dependent on the maximum permissible temperature not being exceeded at the measuring point. Vossloh-Schwabe has determined a casing temperature measuring point – $t_{c\ max.}$ – on all EB casings. To avoid shortening the service life or diminishing operating safety, the stipulated maximum temperature must not be exceeded at this t_c point. This point is determined by testing the converter during normal, IEC-standardised operation at the specified ambient temperature (t_a), which is also indicated on the type plate. As both the design-related ambient temperature and the ballast's inherent heat, as determined by the installed load, are subject to great variation, the casing temperature should be tested at the t_c point under real installation conditions.

Ambient temperature t_a

The ambient temperature – as specified on every EB – denotes the permissible temperature range within the luminaire.

Reliability and service life

If the max. temperature at the t_c reference point (as specified on the type plate and the technical documentation of the ballast) is not exceeded, the defined service life can be expected to be achieved, assuming a switching cycle of 165 minutes on and 15 minutes off. See table on page 187/188 for service life details.

Circuit diagrams for metal halide lamps (HI) and high-pressure sodium lamps (HS) with electronic ballasts (EB)

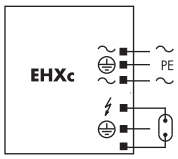

35.339, 50.359, 70.340

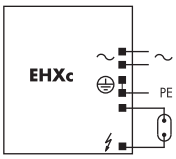

20.329, 35G.327, 35.325, 35.356, 50.358, 70.326, 70.357, 150G.334

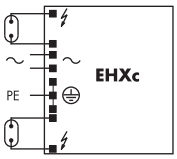

235.316, 270.317

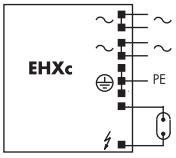

100.353

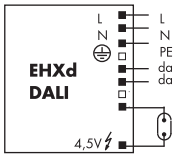

50.360, 70.361, 100.362, 150.363, 250.364

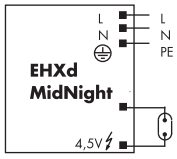

50.365 M, 70.366 M, 100.367 M, 150.368 M, 250.369 M

Electromagnetic Ballasts for Discharge Lamps

Electromagnetic ballasts for HI and HS Lamps

As the lamp manufacturer's reference values regarding lamp current and voltage are generally identical for metal halide (HI) and high-pressure sodium lamps (HS) of the same lamp wattage and the impedance values required for the ballast are also identical, the same ballasts can frequently be used for both lamp types. It should be remembered that HI lamps react sensitively to impedance deviations from the rated value with appreciable colour changes. Vossloh-Schwabe ballasts therefore comply with the lamp's narrower tolerances. Moreover, ballasts remain below the maximum peak DC value for HI lamps. This value is not specified for HS lamps; instead, the maximum stated start-up current must not be exceeded.

In order to keep the temperature of the luminaires and the electrical values of the lamps within tolerable limits, the impedance of the ballasts must remain constant over the entire service life. A so-called service life test (test of thermal durability) provides proof of this requirement having been met.

HI and HS lamps constitute a special case in terms of thermal testing. In rare cases, a safety risk can occur at the end of the service life of lamps fitted with external bulbs. The safety risk is caused by the so-called lamp rectifier effect, which can lead to overheating of ballasts, ignitors, lampholders and conductors and can therefore destroy the luminaire. Against this background, the luminaire standard EN 60598-1 "luminaires; part 1: general requirements and tests" has been supplemented by tests concerning this safety risk. As a result, since 1 September 2002, it has been illegal to market luminaires that do not comply with the new regulations. This means luminaires need to be fitted with thermal protection that prevents a luminaire from overheating in the event of this malfunction.

In this respect, it is recommended to use VS ballasts with temperature switches that have already been tested using this circuit.

Test circuit for thermally protected ballasts

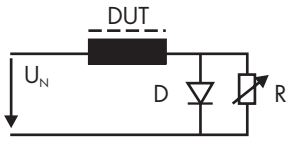

DUT	Device under Test
D	Diode, 100A, 600V
R	Resistor, 0…200 (1/2 lamp output)
U_N	110% of rated supply voltage

Electromagnetic ballasts for HM lamps

Even in the event of major mains fluctuations (92–106% of the rated voltage), the ballast must not fall short of the no-load voltage specified by the lamp manufacturer nor exceed a fixed short-circuit current. The start-up current must be high enough to ensure that at least 90% of the lamp's operating voltage is achieved within 15 minutes.

Power reduction with HS and HM lamps

The lamp wattage can be reduced by operating the ballast at a higher impedance value, higher than the rated value. The lamp manufacturer's specifications must be observed in doing so to avoid shortening the lamp's service life. The lamps should be started at the ballast's rated impedance and only switched down to reduced operation after a period of at least five minutes.
The impedance value can be altered by using an additional ballast (high-effort option) or by using a switchable ballast (low-cost option). These ballast models can be switched using either a modern, time-controlled electronic power reduction switch, which is equipped with an additional control conductor (230 V), or a power reduction switch with a constant incentive rate setting (no control conductor).

The construction of power reduction switches with control conductors differs according to the selected increase in impedance.

Power reduction with switchable ballasts

Ballast type	Tested with	Mains voltage	System output 100%	Reduced system output		Reduced luminous flux
			W	W	%	% (approx. values)
U-NaHJ 70/40%	HS 70	230, 50	83	50	60	55
U-NaH 100/40%	HS 100	230, 50	114	67	58	55
U-NaH 150/40%	HS 150	230, 50	160	98	61	55
U-NaH 250/40%	HS 250	230, 50	271	150	55	50
U-NaH 400/250.805	HS 400	230, 50	421	253	60	50
Q 80/50.596	HM 80	230, 50	90	55	61	55
Q 125/80.611	HM 125	230, 50	134	89	65	55
U-Q 250/150.438	HM 250	230, 50	274	164	60	55
U-Q 400/250.437	HM 400	230, 50	422	267	65	55

Example: Osram lamp, type NAV, HQL

Switching to reduced power using additional impedance (second ballast)

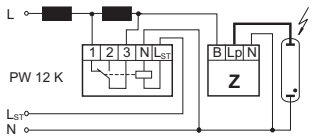

Switching to reduced power using a switchable ballast (ballast with tapping points)

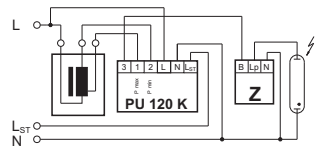

Start-up switches

As high-pressure lamps operate with a start-up phase, the lamp's full luminous flux will only be reached after completion of this start-up period. In the event of disconnection from the mains, this start-up phase is dependent on the lamp's temperature. If an additional source of light is desired or required for this start-up period for safety-relevant applications, it is possible to switch on an auxiliary lamp with the help of a start-up switch.
There are two types of start-up switches:

- AS 1000 K for superimposed ignition systems. This switch monitors the lamp's operating voltage. If this is below a defined value (approx. 60% of the lamp's luminous flux), an auxiliary lamp is switched on.
- AS 1000 K A10 for pulse ignition systems and electronic ballasts.
  This model switches the auxiliary lamp off after a defined period of time (10 minutes), after which the high-pressure lamp will have reached the desired illumination level.

Lamp family	Typical start-up time	Typical restart time (mains interruption at lamp operating temperature)
HS	3 min.	5 min.
HI / C-HI	3 min.	10 min.
HM	4–5 min.	4–5 min.
LS	10 min.	5 min.

Control Gear Units for High-pressure Discharge Lamps

With electromagnetic ballasts

Control gear units with electromagnetic ballasts for high-pressure sodium lamps (HS), metal halide lamps (HI) and metal halide lamps with a ceramic discharge tube (C-HI) are fitted with all the components needed to ensure safe normal operation. Apart from a ballast, control gear units also contain a digital timer ignitor with IPP^{++} technology (Intelligent-Pulse-Pause-Mode), a compensation capacitor and a temperature switch with automatic reset. As all these components form a matched system, they create optimum operating conditions for lamps and small models. These compact control gear units remove the need for separate installation and wiring of individual components, thus considerably reducing assembly time.

Mandatory regulations

DIN VDE 0100	Erection of low voltage installations
EN 60598-1	Luminaires – part 1: general requirements and tests
EN 61347-1	Operating devices for lamps – part 1: general and safety requirements
EN 61347-2-1	Control gear for lamps; part 2-1: special requirements for ignitors (other than glow starters)
EN 61347-2-9	Control gear for lamps; part 2-9: special requirements for ballasts for discharge lamps (except fluorescent lamps)
EN 60923	Ballasts for discharge lamps – performance requirements
EN 60927	Operating devices for lamps; ignitors (glow starters); performance requirements
EN 61048	Operating devices for lamps – capacitors for fluorescent lamp circuits and other discharge lamp circuits; general and safety requirements
EN 61049	Operating devices for lamps – capacitors for fluorescent lamp circuits and other discharge lamp circuits; performance requirements
EN 55015	Limits and methods of measurement of radio disturbance characteristics of electrical lighting and similar equipment
EN 61000-3-2	Electromagnetic Compatibility (EMC) – part 3: maximum values – main section part 2: maximum values for mains harmonics (device input current up to and including 16 A per conductor)
EN 61547	Installations for general lighting purposes – EMC immunity requirements

Technical specifications

Operating voltage range
Control gear units can be operated at the specified mains voltage within a tolerance range of ± 10% for HS/HI lamps and ± 3% for C-HI lamps.

Leak current ≤ 0.1 mA

Compensation/power factor
Parallel-compensated control gear units with a power factor of $\lambda < 0.9$ ($\lambda < 0.85$ for 100 W)

Degree of protection
IP40, IP65
IP54 for aluminium casing

Protection class Independent, protection class II control gear units (plastic casing)
Independent, protection class I control gear units (aluminium casing)

Max. ambient temperature
See t_a value on the type plate of the control gear unit

Lead length to lamp
Max. 10 m

"F" designation Suitable for mounting on surfaces of normal flammability

Mechanical mounting

Mounting position
Any position using the mounting tabs

Clearance Min. of 0.20 m from walls, ceilings and insulation
Min. of 0.20 m from further control gear units
Min. of 0.25 m from sources of heat (lamp)

Surface Solid; control gear unit must not be allowed to sink into insulation materials

Electromagnetic compatibility (EMC)

Interference Interference voltage measurements only have to be taken at the connection terminals for luminaires with electromagnetic control gear units as these systems operate with lamp voltages of under 100 Hz. These low-frequency interference voltages are generally not critical with high-pressure discharge lamps with electromagnetic control gear units.

Interference immunity
Thanks to the robust design and choice of materials, electromagnetic control gear units provide a high degree of interference immunity and are not impaired by normal mains power interference.

Mains Harmonics
After every zero crossing of the lamp current, discharge lamps experience a re-ignition peak as the lamps go out for a brief (imperceptible) moment. These re-ignition peaks of discharge lamps generate mains harmonics that are smoothed by the ballast's impedance. VS electromagnetic control gear units all comply with the stipulated maximum values.

Selection of automatic cut-outs for VS control gear units

Dimensioning automatic cut-outs

When a control gear unit is switched on, high transient current peaks occur due to the smoothing capacitor having to load. The lamps are ignited almost simultaneously, which also causes energy consumption peaks. These high system switch-on currents put a strain on the automatic conductor cut-outs, which must be selected and dimensioned to suit.

Release reaction The release reaction of the automatic conductor cut-outs comply with VDE 0641, part 11, for B and C characteristics.

No. of control gear units

The following values are meant as guidelines only and may vary depending on the respective lighting system. The specified maximum number applies to the number of devices that can be switched on simultaneously. Specifications apply to single-pole fuses; using multi-pole fuses reduces the maximum number by 20%. The considered circuit impedance equals 400 mΩ (approx. 20 m [2.5 mm²] of conductor from the power supply to the distributor and a further 15 m to the luminaire). Doubling circuit impedance to 800 mΩ increases the possible number of control gear units by 10%.

Type of control gear unit	Type of automatic cut-out			
	B (10 A)	B (16 A)	C (10 A)	C (16 A)
VNaHJ 35PZT	7	12	12	20
VNaHJ 70PZT	7	12	12	20
VNaHJ 100PZT	6	10	10	16
VNaHJ 150PZT	5	8	8	14
VNaHJ 250PZT	3	5	5	7
VNaHJ 400PZT	2	4	3	5

Safety functions

Shutdown of defective lamps

In the event of a lamp failing to ignite the control gear unit will automatically shut down after a preset safety period. The programmed switch off time prevents flickering at the end of the lamp's service life. The control gear unit can be reset after shut down and lamp changing by disconnecting and then reconnecting the mains voltage.

Temperature protection

To protect against impermissible excess temperatures, the devices are fitted with a temperature fuse.

Protection against installation and wiring errors

The integrated IPP^{++} function will prevent the power unit from making any attempt to start the lamp in the event of an installation or wiring error and also if the neutral conductor is dislodged within the existing mains voltage network (three-phase supply network). Should the nominal supply voltage be connected, the power unit will begin starting the lamp immediately.

Reliability and service life

The control gear units can be expected to provide a service life of 50,000 operating hours provided that the assembly instructions are observed and the maximum tw value of the ballast is not exceeded. Failure rate: < 0.1%/1,000 hrs

Electrical installation

Connection terminals

Terminals can be contacted with rigid or flexible conductors
- Rigid conductors: max. 2.5 mm²
- Flexible conductors: max. 2.5 mm²
- Stripped lead length: 10–11 mm
- Conductors must not be tin-plated

Connection leads

Admissible diameter 7–9 mm
The suitability of luminaire conductors and cables for use within luminaires with ignition devices must be checked in accordance with luminaire standard EN 60598-1 10.2.2.
In general, all silicone and standard PVC cables meet these requirements.

Wiring

The wiring between the supply mains, control gear unit and lamp must be in accordance with the circuit diagram shown on the type plate.
Note: luminaire casing (metal) must be connected to the protective earth conductor.

Assembly Instructions for Electromagnetic Ballasts

For mounting and installing electromagnetic ballasts for high-pressure discharge lamps

Mandatory regulations

DIN VDE 0100	Erection of low voltage installations
EN 60598-1	Luminaires – part 1: general requirements and tests
EN 61347-1	Operating devices for lamps – part 1: general and safety requirements
EN 61347-2-9	Operating devices for lamps; part 2-9: special requirements for ballasts for discharge lamps (except fluorescent lamps)
EN 60923	Ballasts for discharge lamps – performance requirements
EN 55015	Maximum values and methods of measurement for RFI suppression in electrical lighting installations and similar electrical appliances
EN 61000-3-2	Electromagnetic Compatibility (EMC) – part 3: maximum values – main section part 2: maximum values for mains harmonics (device input current up to and including 16 A per conductor)
EN 61547	Installations for general lighting purposes – EMC immunity requirements

Technical specifications

Operating voltage range
The ballasts can be operated at the specified mains voltage within a tolerance range of ±10% for HS/HI and HM lamps and ±3% for C-HI lamps.

Leak current ≤ 0.1 mA

Compensation/power factor
Inductive ballasts: $\lambda \leq 0.5$
Parallel-compensated ballasts: $\lambda \geq 0.85$

Mechanical mounting

Mounting position
Any

Mounting location
Ballasts are designed for installation in luminaires or comparable devices. Independent ballasts do not need to be installed in a casing.

Fastening
Preferably using M4 to M6 screws, depending on the size of the ballast. Encapsulated ballasts may only be used with flat-headed screws (M5), underlaid with a washer (DIN 9021). (Tightening torque ≈ 2 Nm)

Temperature
The winding temperature tw must be checked during operation and must not exceed the specified maximum value. It must be tested by using the standardised method of measuring resistance. The Δt marking on the type plate is a measure of the ballast's inherent heating and thus of its power loss. The lower this value is the lower the power loss of the ballast. This value is determined using standardised measuring regulations and constitutes a benchmark for comparing ballasts of the same design for selection purposes.

Electromagnetic compatibility (EMC)

Interference
Interference voltage measurements have to be taken at the connection terminals for luminaires with electromagnetic ballasts as these are systems that operate with lamp voltages of under 100 Hz. These low-frequency interference voltages are generally not critical with high-pressure discharge lamps with electromagnetic ballasts.

Interference immunity
Thanks to the robust design and choice of materials, electromagnetic ballasts provide a high degree of interference immunity and are not impaired by normal mains power interference.

Mains Harmonics
After every zero crossing of the lamp current, discharge lamps experience a re-ignition peak as the lamps go out for a brief (imperceptible) moment. These re-ignition peaks of discharge lamps generate mains harmonics that are smoothed by the ballast's impedance. VS electromagnetic ballasts all comply with the stipulated maximum values.

Selection of automatic cut-outs for VS electromagnetic ballasts

Dimensioning automatic cut-outs
When a ballast is switched on, high transient current peaks occur due to parasite capacitances that can accumulate with the number of luminaires. These high system switch-on currents put a strain on the automatic conductor cut-outs. For this reason, only surge-current-proof automatic cut-outs should be used for lighting systems.

Release reaction The release reaction of the automatic conductor cut-outs comply with VDE 0641, part 11, for B and C characteristics.

No. of ballasts The following values are meant as guidelines only and may vary depending on the respective lighting system.
The maximum number of VS ballasts applies to cases where the devices are switched on simultaneously. Specifications apply to single-pole fuses. The number of permissible ballasts must be reduced by 20% for multi-pole fuses. The considered circuit impedance equals 400 mΩ (approx. 20 m of [2.5 m²] conductor from the power supply to the distributor and a further 15 m to the luminaire). Doubling circuit impedance to 800 mΩ increases the possible number of ballasts by 10%. The values quoted in the following tables are guidelines and can be affected by system-specific factors.

Possible number of ballasts connected to automatic cut-outs with or without compensation

Lamp data		C_P	Max. number of ballasts connected to automatic cut-outs – without compensation / with compensation																			
			C10		C13		C16		C20		C25		B10		B13		B16		B20		B25	
W	V	µF	without	with	without	with	without	with	without	with	without	with	without	with	without	with	without	with	without	with	without	with
Mercury vapour lamps (HM)																						
50	230	7	10	19	13	25	15	31	18	39	23	49	8	10	11	12	13	15	16	18	20	23
80	230	8	6	12	7	15	9	19	11	24	14	30	6	6	8	7	10	9	12	11	15	14
125	230	10	4	7	5	9	7	12	7	15	9	19	4	4	5	5	7	6	9	7	10	9
250	230	18	2	4	3	5	3	6	3	7	4	9	2	2	3	2	3	3	4	3	5	4
400	230	25	1	2	1	3	2	4	2	5	2	6	1	1	1	1	2	22	3	2	3	2
700	230	40	–	1	–	1	1	2	1	2	1	3	1	–	1	–	1	1	1	1	2	1
1000	230	60	–	1	–	1	–	1	1	2	1	2	–	–	–	–	1	–	1	1	1	1
Metal halide lamps (HI)																						
35	230	6	11	22	14	29	18	36	23	45	29	50	9	11	12	14	15	18	18	23	23	27
70	230	12	7	12	9	15	11	18	14	23	17	29	5	8	6	10	8	13	9	16	12	20
100	230	12	6	10	7	13	9	16	11	20	14	25	4	7	5	9	6	11	8	14	10	17
150	230	20	4	7	5	9	6	11	7	14	9	17	2	5	3	6	4	8	5	10	6	12
250	230	32	2	5	2	6	3	7	4	9	5	11	1	3	1	4	2	5	3	6	4	8
400	230	35	2	3	2	4	3	5	4	7	5	8	1	2	1	3	2	4	2	5	3	6
1000	230	85	–	1	–	1	1	1	1	3	1	3	–	–	–	–	–	1	1	1	1	2
2000	380	60	–	1	–	1	–	2	–	2	–	3	–	–	–	–	–	1	–	1	–	2
2000	380	37	–	–	–	–	–	1	–	1	–	2	–	–	–	–	–	–	–	1	–	1
3500	380	100	–	–	–	–	–	–	–	–	–	–	–	–	–	–	–	–	–	–	–	–
High pressure sodium vapour lamps (HS)																						
35	230	6	11	22	14	29	18	36	23	45	29	50	9	11	12	14	15	18	18	23	23	27
50	230	10	9	16	11	20	14	24	18	31	22	38	6	11	8	14	10	17	13	22	16	27
70	230	12	7	12	9	15	11	18	14	23	17	29	5	8	6	10	8	13	10	16	12	20
100	230	12	6	10	7	13	9	16	11	20	14	25	4	7	5	9	6	11	8	14	10	17
150	230	20	4	7	5	9	6	11	7	14	9	17	2	5	3	6	4	8	5	10	7	12
250	230	36	2	5	2	6	3	7	4	9	5	11	1	3	1	4	2	5	3	6	4	8
400	230	45	1	3	1	3	2	4	3	5	4	7	1	2	1	2	1	3	2	4	2	5
600	230	60	1	2	1	2	1	2	2	3	2	4	–	1	–	1	1	2	2	2	2	3
1000	230	100	1	1	1	1	1	1	1	2	2	3	–	–	–	–	–	1	1	1	1	2

Safety functions

The VS range includes ballasts with an integrated temperature switch that safely disconnects the lamp from the power supply if the lamp should develop the rectifier effect towards the end of its service life. The cut-out behaviour of the temperature switch is influenced by the luminaire construction. The luminaire manufacturer is responsible for checking the factory settings of the temperature switch in accordance with EN 60598-1 Section 12.5. VS can adjust the temperature switch to the appropriate cut-out temperature to suit requirements.

Reliability and service life

Provided the maximum winding temperature is not exceeded, the ballasts can be expected to yield a service life of 100,000 operating hours.
Failure rate < 0.025 %/1,000 hrs

Electrical installation

Push-in terminals	Terminals can be contacted with rigid conductors up to a maximum of 1.5 mm².
Screw terminals	• Terminals can be contacted with rigid or flexible conductors with ferrules on bare end of core • Conductor cross-sections are determined by the terminals and can vary according to type 0.5–1.5 mm² / 0.75–2.5 mm² / 1.5–2.5 mm² • Stripped lead length: 8 – 9 mm • Conductors must not be tin-plated • Max. tightening torque 0.5 Nm
Wiring	The wiring between the power supply, ballast and lamp must be in accordance with the respective circuit diagram (see pages 200–201).
Components	High-pressure discharge lamps must only be fitted with components that are rated to withstand the respective ignition voltage.

Circuit diagrams for high-pressure sodium lamps (HS) and metal halide lamps (HI)

50

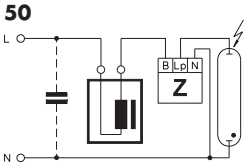

Superimposed ignition of HS and HI lamps

51

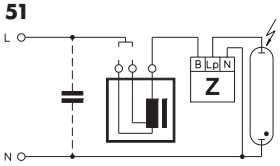

Superimposed ignition of HS and HI lamps
(ballasts with two alternative voltage tapping points)

52

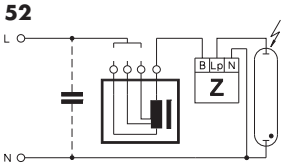

Superimposed ignition of HS and HI lamps
(ballasts with three alternative voltage tapping points)

53

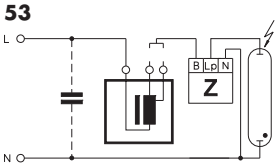

Superimposed ignition of HS and HI lamps
(ballasts with two alternative power tapping points)

54

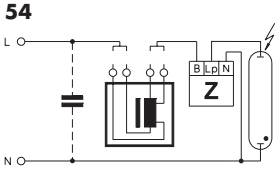

Superimposed ignition of HS and HI lamps
(ballasts with two alternative voltage and
power tapping points)

55

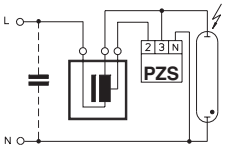

Pulse ignition of standard HS lamps

56

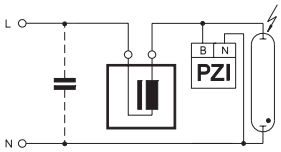

Pulse ignition of HI lamps, ignition voltage 0.9 kV

58

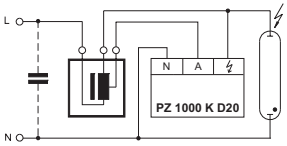

Pulse ignition for HS and HI lamps

59

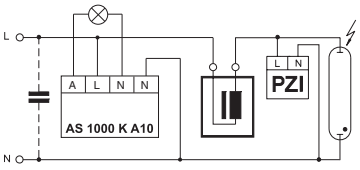

Start-up switch for HI lamps, ignition voltage 0.9 kV

60

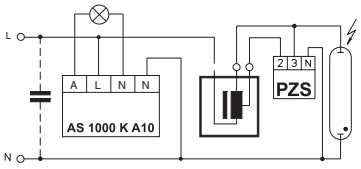

Start-up switch for standard HS lamps

61

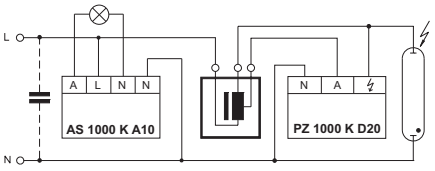

Start-up switch for HS and HI lamp

62

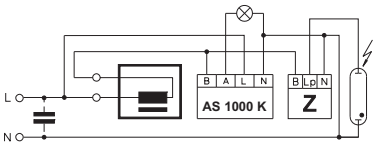

Start-up switch for HS and HI lamps

63

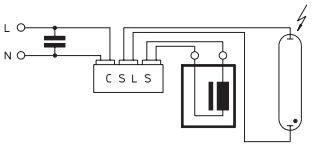

SDW-T lamps

64

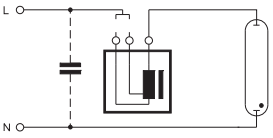

HS lamps with internal ignitor (ballasts with
two alternative voltage tapping points)

65

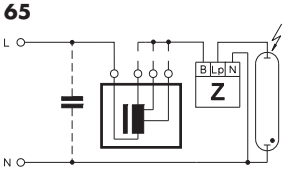

Superimposed ignition of HS and HI lamps
with three alternative power tapping points

66

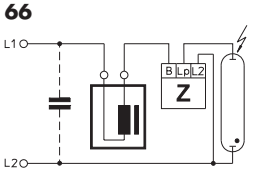

Superimposed ignition of HS and HI lamps
with polyphase power systems

Circuit diagrams for mercury vapour lamps (HM)

67

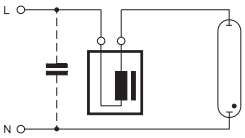

HM lamps

68

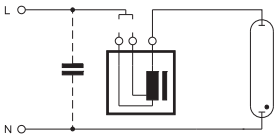

HM lamps (ballasts with
two alternative voltage tapping points)

69

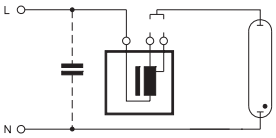

HM lamps (ballasts with
two alternative power tapping points)

70

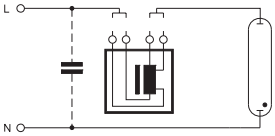

HM lamps (ballasts with two alternative voltage
and power tapping points apiece)

71

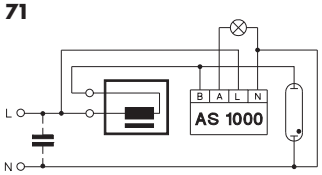

Start-up switch for HM lamps with auxiliary lamp

Power reduction of mercury vapour lamps (HM lamps)

L_{ST} connectable to L1, L2 and L3

92

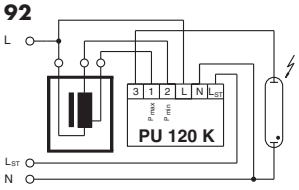

Disconnected control phase (L_{ST} = 0 V)
with ballasts with two tapping points

93

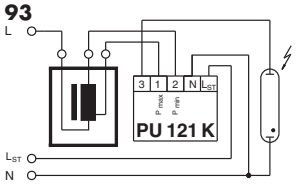

Connected control phase (L_{ST} = 230 V)
with ballasts with two tapping points

94

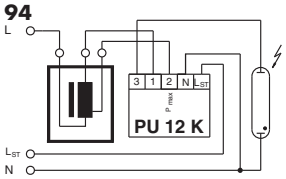

Disconnected control phase (L_{ST} = 0 V)
with ballasts with two tapping points

95

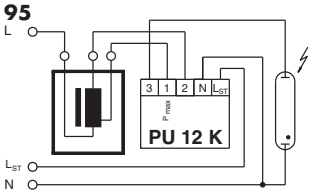

Connected control phase (L_{ST} = 230 V)
with ballasts with two tapping points

96

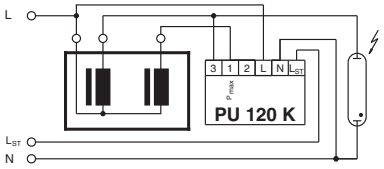

Disconnected control phase (L_{ST} = 0 V)
with two ballasts connected in parallel

97

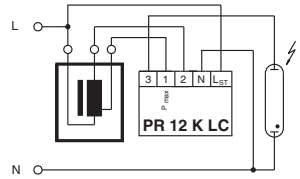

Electronic power reduction without control phase

98

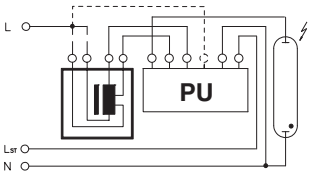

Ballasts with two tapping points and
two voltage tapping points (L_{ST} = 0 V or L_{ST} > 0 V)

Power reduction of high-pressure sodium lamps (HS lamps) – superimposed ignition system

L_{ST} connectable to L1, L2 or L3

80

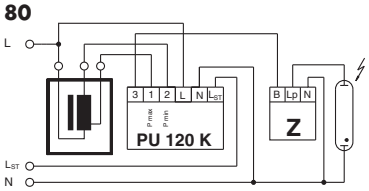

Disconnected control phase (L_{ST} = 0 V)
with ballasts with two tapping point

81

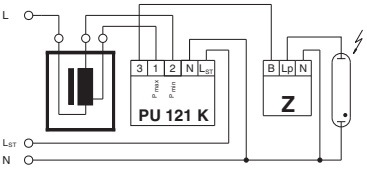

Connected control phase (L_{ST} = 230 V)
with ballasts with two tapping points

82

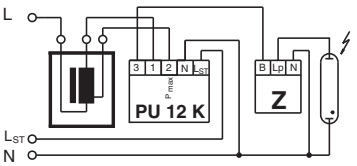

Disconnected control phase (L_{ST} = 0 V)
with ballasts with two tapping points

83

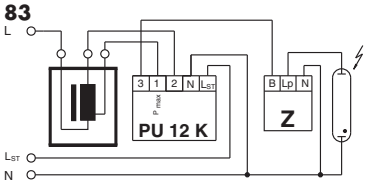

Connected control phase (L_{ST} = 230 V)
with ballasts with two tapping points

84

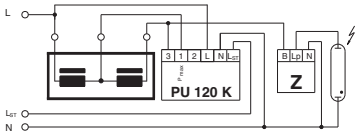

Disconnected control phase (L_{ST} = 0 V)
with main ballast and additional inductance

85

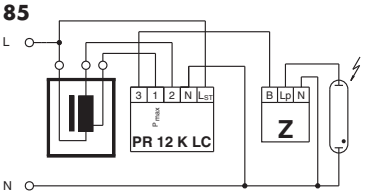

Electronic power reduction without control phase

86

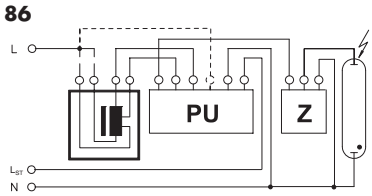

Ballast with two tapping points and two
voltage tapping points (L_{ST} = 0 V or L_{ST} > 0 V)

89

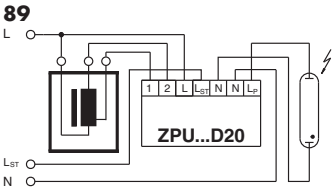

Disconnected control phase (L_{ST} = 0 V)
with ballasts with two tapping points

Lampholders for High-pressure Discharge Lamps

Metal halide and high-pressure sodium lamps feature extremely different bases, which include RX7s, Fc2, G8.5, GX8.5, GU8.5, GX10, G12, GX12, PG12, PGJ5, GU6.5, E27 and E40, depending on whether the lamp is single- or double-ended. All lampholders are subject to the same typical conditions found with discharge lamps: high ignition voltages and temperatures. The high start-up currents deserve particular attention in lampholder design. This is also reflected by the insulation materials, which are usually solid ceramics or heat-resistant plastic (e.g. PPS – polyphenylene sulphide). Depending on the lamp's requirements (voltage, current, temperature, etc.), silver, nickel and copper alloys with thick nickel coatings are used as conductors. The luminaire regulation EN 60598-1 (VDE 0711 part 1), defines the safety requirements with regard to ignition voltages in connection with creepage and air clearance distances. Special care must be taken to ensure that lampholders are approved for discharge lamps when using high-pressure lamps with E27 and E40 Edison bases. Lampholders that are suitable for this purpose are marked with a maximum value of "5 kV" and comply with the increased creepage and air clearance distances specified by the lampholder requirements in EN 60238 (VDE 0616 part 1). The lampholder regulations governing special lampholders, EN 60838-1 (VDE 0616 part 5), apply analogously to all other base systems. The high ignition voltage pulses also place special demands on the conductors. In practice, silicone-insulated conductors with an outer diameter of 3.6 mm have proved to be suitable for discharge lamps. Silicone-insulated conductors with a glass-silk lining with a diameter of 7 mm should be used for lamps with an instant hot restart (20 kV) function.

VS lampholders for the UL market and UL approved leads are available for all common lamp types.

Further information can be found at www.unvlt.com.

When connecting lampholders to push-in terminals of ballasts, the diameter of the conductor and the length of the stripped cables must be taken into account to ensure correct operation of the installed components. To this end, Vossloh-Schwabe can make additional versions available with compacted cable ends as further options.

When using compacted cable ends, the reduction of the cable diameter at the end of the cable must be taken into account, which means that the respective ballast push-in terminal has to be capable of taking the next-smaller cable diameter (see table with examples).

When using screw terminals to connect a ballast, it is recommended to use a ferrules on the bare end of core.

Cable cross-section mm²	Push-in terminal range on the ballast when using compacted cable ends mm²
0.75	≥ 0.5
1	≥ 0.75

Ferrule on bare end of core

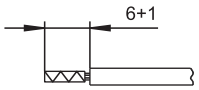

Compacted cable ends

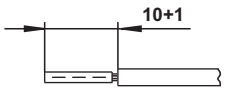

Bases for the most commonly used HI and HS lamps

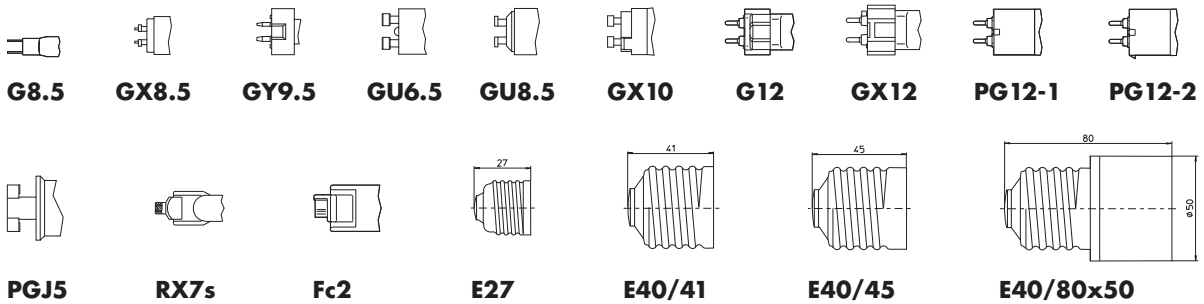

Bases for the most commonly used HM lamps

Edison bases are predominantly used for mercury vapour lamps (HM)

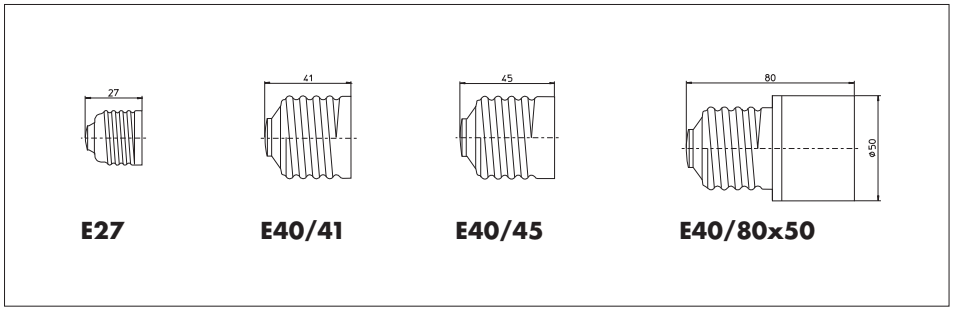

Ignitors

Ignition voltages for high-pressure sodium lamps (HS) and metal halide lamps (HI)

The ignition voltage of HS and HI lamps is determined by the respective lamp technology as well as the creepage and air clearance distances of the base-lampholder system. High-pressure sodium lamps of 35, 50 and 70 W with an E27 base are ignited with a voltage of between 1.8 and 2.3 kV. All other high-pressure lamps of the sodium and metal halide families require an ignition voltage of between 4 and 5 kV (except for special lamps and lamps with base PGJ5).

Superimposed ignitors

Superimposed ignitors work independently of ballasts and generate defined ignition pulses within the voltage ranges of 220–240 V ±10% and 380–415 V ±10%. As the mains frequency only plays a minor role, these systems work equally well at 50 Hz and 60 Hz. In accordance with the lamp manufacturer's specifications, pulses or clusters of pulses of defined width and height are generated in every half wave. Although lamp current flows through superimposed ignitors, they only cause low losses in relation to the system's power consumption. The maximum ambient temperature can be calculated by subtracting the ignitor's self-heating, which is caused by the inherent losses, from the specified maximum casing temperature (t_c).

Superimposed ignitors should be mounted near the lampholder. The clearance needed between the ignitor and the lamp is determined by the respective maximum load capacitance, which is specified for each ignitor in the technical specifications. The capacitive load of the cable is dependent on its physical properties and wiring layout; this value usually ranges between 70 pF and 100 pF per metre. The casing temperature must not fall below –30 °C and must not exceed the maximum value specified on the device.

Circuit principle of a superimposed ignitor

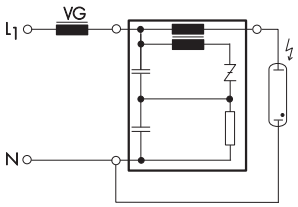

Pulse ignitors

Pulse ignitors use the winding of an inductive ballast to generate the pulse voltage needed to ignite high-pressure discharge lamps. For that reason, ballasts must be designed to withstand these high ignition voltages. In this respect, special attention is paid to the insulation as well as the creepage and air clearance distances. As pulse ignition systems generate high-energy pulses, they are also suitable in the event of longer conductor distances between ignitor and lamp. State-of-the-art ignitors feature electronic circuitry. Depending on their design and the technical requirements, the simplest solution is to connect pulse ignitors in parallel with the lamp. Further models make partial use of the winding of a ballast, which will either feature multiple tapping points for voltage selection or special tapping points for pulse operation.

Circuit principle of a pulse ignitor

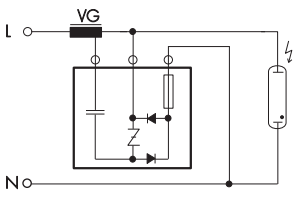

VS ignitors provide the following advantages:

- fully electronic construction
- compact design
- large nominal voltage range
- large output range
- low self-heating
- minimal power loss
- low noise
- long service life
- high electrical safety due to high-quality components (e.g. approved capacitors)
- highly heat-resistant (max. permissible casing temperature t_C: 105 °C for superimposed ignitors and 95 °C for pulse ignitors)
- highly fire-resistant potting compound (certified according to EN 60926 and UL 94-V0)
- environmentally compatible potting compound (waste key No. 57110)

Product range

Vossloh-Schwabe's product range covers superimposed and pulse ignitors in standard models and with automatic cut-outs. Superimposed ignitors with automatic cut-outs are available with various cut-out times and ignition voltage pulse mechanisms (A and D). In this respect, D-series ignitors featuring the intelligent pulse-pause mode (IPP) are the best solution in terms of ignition reliability and switching off defective lamps.

Electronic ignitors with integrated cut-outs capture data on ignition behaviour during the ignition process. These data, e.g. regarding ignition frequency or failure, serve to identify ageing lamps and to ensure the ignition process is reliably switched off after a defined period of time at the end of the lamp's service life or in the event of defective lamps. This reduces the negative consequences associated with defective lamps.

Superimposed and Pulse Ignitors with Automatic Cut-out

Ignitors with IPP technology and extended cut-out – D series

After connection to mains voltage, D series ignitors generate ignition voltage pulses that are controlled and if necessary switched off by the ignitor in accordance with the lamp's operating state, lamp recognition and the safe burning time. If the safe burning time is not attained after three consecutive ignition attempts, pulse generation will cease.

Appropriately programmed microprocessors enable these performance features of ignitors with IPP technology (Intelligent Pulse-Pause Mode) and extended cut-outs.

Z ... D20/
PZ ... D20 for HS, HI and C-HI lamps
programmed cut-out time: 1,216 seconds

Ignitors with IPP technology and extended cut-outs are available up to an output of 1,000 W.

Programmed cut-out function of VS ignitors

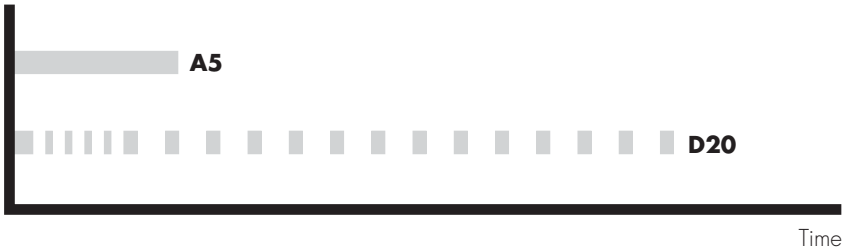

Ignitors with automatic cut-out – A series

After connection to mains voltage, A series ignitors supply a continuous stream of ignition voltage pulses until the lamp has ignited or the predefined cut-out time (sum of all ignition periods) has been reached if the lamp fails to ignite.

PZ ... A5 for HSI lamps
programmed cut-out time: ca. 300 seconds

Pulse ignition systems – overview of technical specifications

For HS, HI and C-HI lamps – PZ 1000 K D20
for high-pressure sodium lamps (HS) 50–1000 W,
metal halide lamps (HI) 35–1000 W and
for ceramic discharge tube lamps (C-HI) 35–400 W
Ignition voltage: 1.8–2.3 kV or 4–5 kV
No. of pulses: 2 per mains period
Load capacitance: 20–1000 pF
Ignitors with automatic cut-out and IPP technology
Suitable ballast types: NaHJ ... PZT with special winding tapping point,
whose position is determined by the magnitude of the ignition voltage

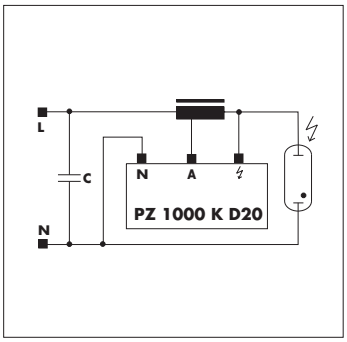

For HS lamps – PZS 1000 K
for standard high-pressure sodium lamps (HS) 50–1000 W
Not suitable for discharge lamp models SUPER, PLUS, XL, etc.
Ignition voltage: approx. 4 kV
No. of pulses: 1 per second
Load capacitance: 20–4000 pF
Suitable ballast types:
NaH ... P with winding tapping point
(20 V voltage difference)

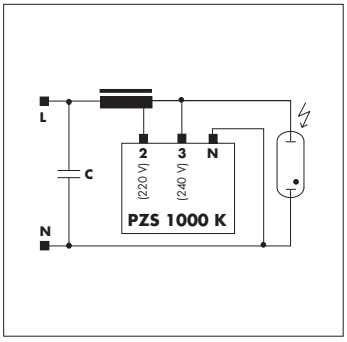

For HI lamps – PZI 1000/1 K
for metal halide lamps (HI)
with an ignition voltage up to 0.9 kV
No. of pulses: 1 per mains period
Load capacitance: max. 10,000 pF
Suitable ballast models: Q...

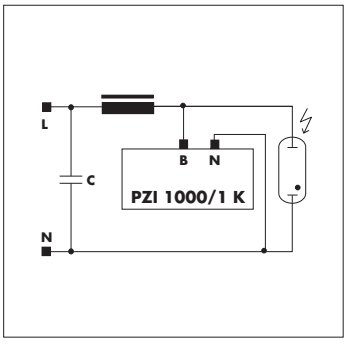

Assembly Instructions for Ignitors

For mounting and installing ignitors

Mandatory regulations

DIN VDE 0100	Erection of low voltage installations
EN 60598-1	Luminaires – part 1: general requirements and tests
EN 61347-1	Operating devices for lamps – part 1: general and safety requirements
EN 61347-2-1	Control gear for lamps; part 2-1: special requirements for ignitors (other than glow starters)
EN 60927	Control gear for lamps; ignitors (other than glow starters); performance requirements
EN 55015	Maximum values and methods of measurement for RFI suppression in electrical lighting installations and similar electrical appliances
EN 61000-3-2	Electromagnetic Compatibility (EMC) – part 3: maximum values – main section part 2: maximum values for mains harmonics (device input current up to and including 16 A per conductor)
EN 61547	Installations for general lighting purposes – EMC immunity requirements

Technical specifications

Operating voltage range

Ignitors can be operated at the specified mains voltage within a tolerance range of ±10%.

Max. casing temperature t_c

A maximum casing temperature t_c of 105 °C or 95 °C is specified for superimposed ignitors and pulse ignitors, respectively. Tests carried out during operation must ensure this maximum value is not exceeded. Selecting an ignitor for higher lamp currents can reduce self-heating and thus also the temperature at the t_c measuring point. Details regarding self-heating can be found in the following table. The temperature structure in the luminaires is negatively influenced by ageing lamps.

Minimum ambient temperature t_a

The minimum ambient temperature ta for all superimposed and pulse ignitors is –30 °C. Ignitors for use in applications with special requirements to the ambient temperature (for example –40 °C) are available on request.

Superimposed ignitors – Technical specifications

Voltage V/Hz	**Ignitor type**	Max. lamp current A	Power loss W	Inherent heating K	Ignition voltage kV	Max. load capacity pF	Max. conductor length between ignitor and lamp* m	Connection terminals (mm²) Screw	Push-in	Casing material	Dimensions (dia. x L or L x W x H) length without threaded stud mm
220-240/	**Z 70 S**	2	< 0.6	< 5	1.8-2.3	200	2	0.75-4	–	Al	Ø35 x 76
50-60	**Z 70 K**	2	< 0.6	< 5	1.8-2.3	200	2	0.75-4	–	PC	78 x 34 x 27
								–	0.5-2.5		81 x 34 x 27
	Z 70 K D20	2	< 0.6	< 5	1.8-2.3	200	2	0.75-4	–	PC	80 x 34 x 30
								–	0.5-2.5		83 x 34 x 30
	Z 250 S	3.5	< 1.8	< 20	4.0-5.0	100	1	0.75-4	–	Al	Ø35 x 76
	Z 250 K	3.5	< 1.8	< 20	4.0-5.0	100	1	0.75-4	–	PC	78 x 34 x 27
								–	0.5-2.5		81 x 34 x 27
	Z 250 K D20	3.5	< 1.8	< 20	4.0-5.0	100	1	0.75-4	–	PC	80 x 34 x 30
								–	0.5-2.5		83 x 34 x 30
	Z 400 S	5	< 3.0	< 25	4.0-5.0	100	1	0.75-4	–	Al	Ø45 x 76
	Z 400 M **Z 400 M VS-Power** **Z 400 M S**	5	< 3.0	< 35	4.0-5.0	50	0.5	0.75-4	–	Al	Ø35 x 76
	Z 400 M K	5	< 3,0	< 35	4,0-5,0	50	0,5	0,75-4	–	PC	78 x 34 x 27
								–	0.5-2.5		81 x 34 x 27
	Z 400 M K VS-Power	5	< 3,0	< 35	4,0-5,0	50	0,5	0,75-4	–	PC	78 x 34 x 27
								–	0.5-2.5		81 x 34 x 27
	Z 400 S D20	5	< 3.0	< 25	4.0-5.0	100	1	0.75-4	–	Al	Ø45 x 90
	Z 400 M K D20	5	< 3.0	< 35	4.0-5.0	50	0.5	0.75-4	–	PC	80 x 34 x 30
								–	0.5-2.5		83 x 34 x 30
	Z 750 S	8	< 3.0	< 20	4.0-5.0	100	1	0.75-2.5	–	Al	Ø50 x 90
	Z 1000 S **Z 1000 TOP**	12	< 6.0	< 35	4.0-5.0	100	1	0.75-2.5	–	Al	Ø50 x 80 85 x 85 x 60
	Z 1000 S D20	12	< 6.0	< 35	4.0-5.0	100	1	0.75-2.5	–	Al	Ø50 x 89
	Z 1000 L	12	< 6.0	< 35	4.0-5.0	2000	20	0.75-2.5	–	Al	Ø50 x 97
	Z 1200/2,5	15	< 7.5	< 40	2.0-2.5	200	2	0.75-2.5	–	Al	Ø50 x 87
	Z 1200/9	15	< 10.0	< 40	7.0-8.0	50	0.5	0.75-2.5	–	Al	Ø50 x 135
	Z 2000 S	20	< 6.0	< 30	4.0-5.0	100	1	0.75-2.5	–	Al	Ø65 x 96
380-420/	**Z 1000 S/400V**	6	< 3.3	< 28	4.0-5.0	2000	20	0.75-2.5	–	Al	Ø45 x 100
50-60	**Z 2000 S/400V**	12	< 5.0	< 32	4.0-5.0	2000	20	0.75-2.5	–	Al	Ø50 x 98
	Z 3500 S/400V	20	< 7.0	< 35	4.0-5.0	100	1	0.75-2.5	–	Al	Ø65 x 96

* With a conductor of, for instance, 100 pF per m (3x2.5 mm²)

Pulse ignitors – Technical specifications

Nominal voltage/ frequency V/Hz	**Pulse ignitor type**	Casing temperature t_c °C	Ignition voltage kV	Max. load capacity pF	Max. conductor length between ignitor and lamp* m	Connection screw terminals mm²	Casing material	Dimensions (dia. x L or L x W x H) length without threaded stud mm
220-240/50-60	**PZS 1000 K**	95	approx. 4	4000	40	0.5-1.5	PC	50 x 28 x 27
220-240/50-60	**PZ 1000 K D20**	95	1.8-2.3/ 4.0-5.0	1000	10	0.75-2.5	PC	74 x 34 x 27
220-240/50-60	**PZI 1000/1 K**	95	0.7-0.9	10000	100	0.5-2.5	PC	57 x 28 x 27
380-420/50-60	**PZ 1000/400 V A5**	95	4.0-5.0	800	8	0.75-2.5	Al	Ø40 x 80

* With a conductor of, for instance, 100 pF per m (3x2.5 mm²) – wiring must be taken into consideration

Mechanical mounting

Mounting position Any

Mounting location
Ignitors are designed for installation in luminaires or comparable constructions. Ignitors must be protected against radiation of direct lamp heat by appropriate installation.

Clearance from lamp
The clearance needed between ignitor and lamp is determined by the load capacitance of the conductors and by the type of ignitor pulses. The table on page 208 gives details of the clearance needed for a typical 3-phase lead with a cross-section of 2.5 mm² per conductor.

Casing materials Unmarked in the type description: aluminium; marked "K": polycarbonate

Fastening Via threaded stud M8x10 (Z 2000 S, Z 3500 S/400 V: M12x12)

Dimensions The table on page 208 provides details of ignitor dimensions.

Electromagnetic compatibility (EMC)

Interference Ignitors only generate interference due to the high ignition voltages during lamp ignition. This is classified as click interference and is not evaluated in lighting technology. However, as this interference occurs continuously in the event of old lamps that fail to ignite, operators of lighting systems are legally obliged to exchange such lamps.

Interference immunity
Owing to their design and the materials used, VS ignitors are characterised by high interference immunity and comply with the specified maximum values.

Mains harmonics Are not observed during lamp ignition. VS ignitors meet the requirements.

Reliability and service life

The service life of an ignitor is dependent on strict compliance with the casing temperature t_c during operation. As the ignitors are only subjected to loads during high-voltage lamp ignition, a service life of 10 years can be expected provided the t_c values are not exceeded. Failure rate: < 0.04%/1,000 hrs

Electrical installation

Connection terminals
Ignitors feature screw or push-in terminals. For screw terminals a maximum torque value of 0.8 Nm must not be exceeded when connecting the conductor. Push-in terminals are for rigid conductors with a cross section of 0.5–2.5 mm² or respective flexible conductors with ferrule bare end of cores. Stripped lead ends of 8–9 mm are required. Tinned lead ends are not permitted. The permissible conductor cross-sections can be seen in the table on page 208.

Wiring The ignitors must be wired between ballast and lamp in accordance with the circuit diagrams on pages 200–202. The load capacitances of the wiring must also be taken into account. Distances to lamps should be kept as short as possible.

Power switches for street lighting

In view of the drive to cut public spending on energy and also in the light of environmental policies to protect resources, reducing the power consumption of high-pressure discharge lamps is becoming increasingly important.

Power reduction is possible on high-pressure sodium vapour and mercury vapour lamps and is realised with the aid of electronic actuators or by switching the inductance in the luminaire itself with the aid of power switches.

Provided that the lamp still emits an acceptable minimum of light output and uniformity, these lamps can be used to reduce the lighting level of outdoor lighting systems during off-peak traffic periods (e.g. in accordance with DIN 5044 for street lighting).In conjunction with the appropriate ballasts, the VS power switches constitute a perfect all-round solution for power switching purposes. This VS system has been approved by leading lamp manufacturers.

Power switch PR 12 K LC – Power reduction without control line

The new VS PR 12 K LC power switch is capable of setting the period of power-reduced operation based on the measured burning time of a lighting system. This eliminates the time-consuming task of continually adjusting the times of power-reduced operation to suit constantly changing day-night cycles; it also removes the need for making adjustments due to daylight-saving times and is thus suitable for use worldwide (regionally independent).

Function

The intelligent PR 12 K LC power switch does not require a control line to reduce lamp output; it uses the tapping of the ballast. Thanks to an integrated microprocessor, the PR 12 K LC power switch can measure the burning time of the luminaire. This value is then compared to data stored on the chip and used to set the time at which the luminaire will switch over to power-reduced operation. The luminaire will be operated at reduced power for a minimum of six hours (reduced by approx. 40% of the lamp's nominal rating at 50% of luminous flux). This period of power reduction can be extended to a maximum of 10 hours.

Setting periods of power-reduced operation

The power switch is delivered in its default setting – i.e. the dial is set to 'Test (Code 0)'. After the luminaire has been installed, the desired power reduction time must be set using the dial on the power switch. The power-reduction period can be set to a minimum of six hours and can be extended by up to two hours in both directions (i.e. earlier or later). This results in a maximum power-reduction period of 10 hours.

The dial enables the following settings:

Dial settings		t_1	Basic power	t_2	Total power
Position	Timings	Hours	reduction period (hrs)	Hours	reduction time (hrs)
0	Test	Factory setting: 5 seconds on full load, followed by power reduction			
1	0/0	0	6	0	6
2	0/1	0	6	1	7
3	0/2	0	6	2	8
4	0.5/0	0.5	6	0	6.5
5	0.5/1	0.5	6	1	7.5
6	0.5/2	0.5	6	2	8.5
7	1/0	1	6	0	7
8	1/1	1	6	1	8
9	1/2	1	6	2	9
A	1.5/0	1.5	6	0	7.5
B	1.5/1	1.5	6	1	8.5
C	1.5/2	1.5	6	2	9.5
D	2/0	2	6	0	8
E	2/1	2	6	1	9
F	2/2	2	6	2	10

* Voltage range 210–275 V ** Voltage range 250–315 V

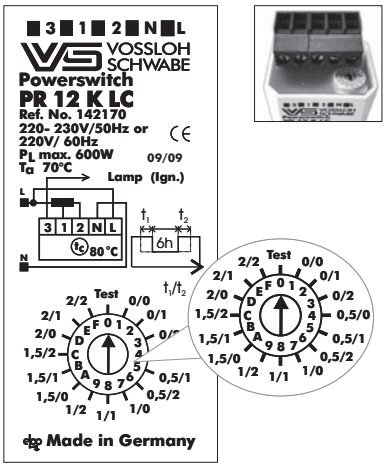

Determining operating/power reduction periods

- The dial is set to the desired period of power reduction, e.g. to position 1 (0/0), which corresponds to a power-reduction period of six hours.
- In the first night, the luminaire is activated by the twilight switch (e.g. at 20:30 hours) and will operate at its nominal rating. After four hours (default setting), the luminaire will be switched down by 40% of the lamp output by the power switch and will then remain in power-reduced operation until the twilight switch turns the system off (e.g. at 06:30 hours).
- During this time, the power switch will measure the entire burning time of the lamp (10 hours in our example).
- The power switch then compares the measured burning period with values stored on the microprocessor. The integrated comparative values of the power switch form the basis for the starting point of power-reduced operation for the following night. The "new" starting time will then be stored by the power switch until the following night.
- In the second night, the lighting system – controlled by the twilight switch and thus dependent on the day/night cycle of the respective region and the time of year – will be activated (and deactivated) at a slightly different time as compared to the first night (either earlier or later, depending on the season)
- With the dial set to position 1, the power switch will thus activate the six-hour period of power-reduced operation after two hours, as per our example, and will then revert to nominal operation before the twilight switch finally sends the signal to switch the lighting system off.
- During the night, the power switch will again measure the entire burning time, compare this value with the stored values and then reset the starting time for power-reduced operation.
- The period of power-reduced operation can be adjusted by changing the dial setting. This period can be extended in both directions (i.e. earlier or later) as detailed in the table on page 210.
- If the dial is, for instance, set to 9 (1/2) this will produce a total period of power-reduced operation of 9 hours (1+6+2). As a result, power-reduced operation will begin one hour earlier than the value determined the night before would ordinarily prescribe and will then extend the minimum period of power-reduced operation by two hours.
- If, in very rare cases, the total burning period of the lighting system should remain under six hours per night, the power switch will activate power-reduced operation after 15 minutes of nominal operation and stay in power-reduced mode until the lighting system is switched off. Switching diagram for power reduced operation.

Switching diagram for power reduced operation

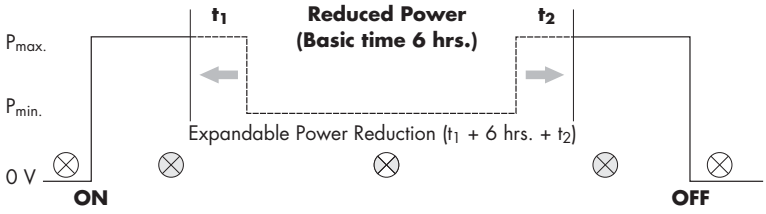

Deactivating reduced-power operation for the night

The functional scope of the PR 12 K LC power switch has been extended with an extra function that permits the operator to deactivate reduced-power operation of the lighting system for a single night. The function can be useful for local festivities or events (e.g. town fêtes) during which it would not be appropriate to operate the local street lighting system at reduced power for safety reasons.

The power switch can be easily programmed to operate the lighting system at normal (i.e. 100%) power for the immediately following night cycle. The power switch is programmed by briefly switching the lighting system on for a period of min. 60 and max. 90 seconds during the day of the event and then switching it off again. The intelligent power switch recognises this command and sets the usual reduced-power operation to zero. The power switch can be successively programmed in this manner as many days in a row as necessary. For every night the lighting system is to be operated at normal (100%) power, the lighting system will have to be switched on for a period of min. 60 and max. 90 seconds during the day. The lighting system will be operated at normal (100%) power in the respective night following day-time activation of the extra function.

The power switch does not need to be reprogrammed to return to power-reduced operation of the lighting system. The power switch will automatically return to its original (power-reducing) program if the lighting system is not switched on during the day for a period of min. 60 and max. 90 seconds.

Before testing the extra function, it is important to ensure that the power switch has been in operation for at least one night cycle. Only then will the "learning cycle" start that is required to perform the basic function. After that, the extra function can be activated as described above.

Luminaire testing

The 'Test (Code 0)' dial setting on the power switch is used for luminaire testing during production as well as for direct function tests for "subsequent" installation in the lighting system. After the luminaire is switched on, the lamp is first operated at its nominal rating. After only five seconds, the system will be switched over to power-reduced operation, which will produce a visible change even though the lamp will not yet have attained its full output.

Maintenance work on the lighting system

Maintenance work that requires the lighting system to be switched on for a period of less than two hours will not influence the settings of power switch PR 12 K LC.
Should the lighting system need to be switched on for more than two hours during maintenance work, the PR 12 K LC power switch will activate power-reduced operation after 15 minutes of nominal operation in the following night and will then start to re-measure the total burning time of the lighting system. To determine the starting time of power-reduced operation for subsequent nights, the power switch will again use the stored comparative values.

Switch Units

For power reduction using electronic ballasts with a 1–10 V interface

Suitable for a broad range of lamps

Vossloh-Schwabe's switch units are designed to enable one-step power reduction of lamps (FL, CFL, LED, HS, HI and C-HI) with the help of the respective electronic ballast or converter. To this end, the switch units utilises the 1–10 V interface of the control gear unit. The switch unit is mainly intended for outdoor luminaires in systems with or without a control phase.

Discharge lamps may only be operated at reduced power if they have been expressly approved for this purpose by the manufacturer. In addition, the unit can also be used to dim tubular and compact fluorescent lamps as well as LEDs.

The 1–10 V interface is addressed via an external circuit at the output of the switch unit using a suitably dimensioned resistor. The type of resistor and circuitry are selected by the luminaire manufacturer to suit the desired degree of power reduction.
The switch unit satisfies the provisions of DIN EN 61347 and is suitable for use in outdoor luminaires of protection classes I and II.

Function PR 1–10 V K LC

The intelligent PR 1–10 V K LC switch unit does not require a control line to reduce lamp output.

Thanks to an integrated microprocessor, the PR 1–10 V K LC switch unit can measure the burning time of the luminaire. This value is then compared to data stored on the chip and used to set the time at which the luminaire will switch over to power-reduced operation.

The luminaire will be operated at reduced power for a minimum of six hours (reduced by approx. 40% of the lamp's nominal rating at 50% of luminous flux). This period of power reduction can be extended to a maximum of 10 hours.

Setting periods of power-reduced operation for PR 1–10 V K LC

The PR 1–10 V K LC switch unit is delivered in its default setting – i.e. the dial is set to 'Test (Code 0)'.
After the luminaire has been installed, the desired power reduction time must be set using the dial on the switch unit. The power-reduction period can be set to a minimum of six hours and can be extended by up to two hours in both directions (i.e. earlier or later). This results in a maximum power-reduction period of 10 hours.

The dial enables the following settings:

Dial Settings		t_1	Basic power	t_2	Total power
Position	Timings	Hours	reduction period (hrs)	Hours	reduction time (hrs)
0	Test	Factory setting: 5 seconds on full load, followed by power reduction			
1	0/0	0	6	0	6
2	0/1	0	6	1	7
3	0/2	0	6	2	8
4	0.5/0	0.5	6	0	6.5
5	0.5/1	0.5	6	1	7.5
6	0.5/2	0.5	6	2	8.5
7	1/0	1	6	0	7
8	1/1	1	6	1	8
9	1/2	1	6	2	9
A	1.5/0	1.5	6	0	7.5
B	1.5/1	1.5	6	1	8.5
C	1.5/2	1.5	6	2	9.5
D	2/0	2	6	0	8
E	2/1	2	6	1	9
F	2/2	2	6	2	10

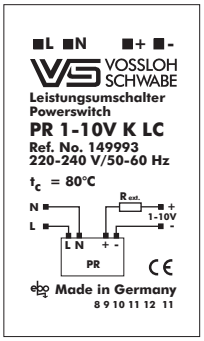

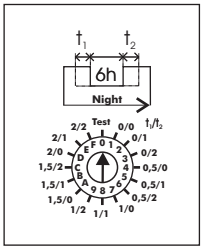

Curcuit diagrams for switch units

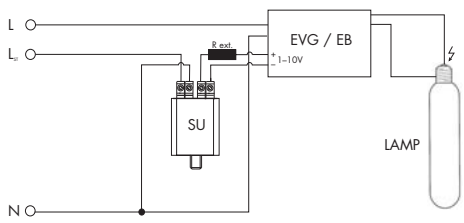

SU 1–10 V K

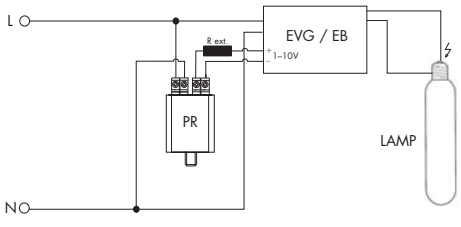

PR 1–10 V K LC

Lamp Table for Discharge Lamps

High-pressure sodium lamps (HS lamps)

Manufacturer	Designation	Base	Lamp current	Superimposed ignition system		Pulse ignition system		Instant restrike ignition system		Control gear unit	EB
				Ignitor	Ballast	Ignitor	Ballast	Ignitor	Ballast		
Lamp output 35 W											
Philips	SDW-T	PG12-1	0.48	ignitor/ stabiliser	NaH 35II	–	–	–	–	–	–
Sylvania	SHP-S...CO/E	E27	0.53	Z 70...	NaHJ 35	PZ 1000KD20	NaHJ 35PZT	–	–	–	–
Lamp output 50 W											
GE	LU...	E27	0.76	Z 70...	NaH 50	PZ 1000KD20	–	–	–	–	EHXd 50
GE	LU...XO	E27	0.76	Z 70...	NaH 50	PZ 1000KD20	–	–	–	–	EHXd 50
GE	LU...SBY	E27	0.76	Z 70...	NaH 50	PZ 1000KD20	–	–	–	–	EHXd 50
Iwasaki	NH.../HV/...	E27	0.76	Z 70...	NaH 50	PZ 1000KD20	–	–	–	–	EHXd 50
Narva	NA	E27	0.76	Z 70...	NaH 50	PZ 1000KD20	–	–	–	–	EHXd 50
Narva	NA...-D	E27	0.76	Z 70...	NaH 50	PZ 1000KD20	–	–	–	–	EHXd 50
Osram	NAV-E .../E	E27	0.76	Z 70...	NaH 50	PZ 1000KD20	–	–	–	–	EHXd 50
Osram	NAV-E...4Y	E27	0.76	Z 70...	NaH 50	PZ 1000KD20	–	–	–	–	EHXd 50
Osram	NAV-T...Super 4Y	E27	0.76	Z 70...	NaH 50	PZ 1000KD20	–	–	–	–	EHXd 50
Philips	SDW-T	PG12-1	0.78	ignitor/ stabiliser	NaH 50II	–	–	–	–	–	–
Philips	SON...Hg free	E27	0.76	Z 70...	NaH 50	PZ 1000KD20	–	–	–	–	EHXd 50
Philips	SON...Pro	E27	0.76	Z 70...	NaH 50	PZ 1000KD20	–	–	–	–	EHXd 50
Philips	SON-T...Plus	E27	0.76	Z 70...	NaH 50	PZ 1000KD20	–	–	–	–	EHXd 50
Radium	RNP	E27	0.76	Z 70...	NaH 50	PZ 1000KD20	–	–	–	–	EHXd 50
Sylvania	SHP-S	E27	0.76	Z 70...	NaH 50	PZ 1000KD20	–	–	–	–	EHXd 50
Sylvania	SHP-TS	E27	0.76	Z 70...	NaH 50	PZ 1000KD20	–	–	–	–	EHXd 50
Lamp output 70 W											
BLV	HST-SE	E27	0.98	Z 70...	NaHJ 70	PZ 1000KD20	NaHJ 70PZT	–	–	VNaHJ 70	EHXd 70
GE	LU	E27	0.98	Z 70...	NaHJ 70	PZ 1000KD20	NaHJ 70PZT	–	–	VNaHJ 70	EHXd 70
GE	LU...RFL	E27	0.98	Z 70...	NaHJ 70	PZ 1000KD20	NaHJ 70PZT	–	–	VNaHJ 70	EHXd 70
GE	LU...SBY	E27	0.98	Z 70...	NaHJ 70	PZ 1000KD20	NaHJ 70PZT	–	–	VNaHJ 70	EHXd 70
GE	LU...XO	E27	0.98	Z 70...	NaHJ 70	PZ 1000KD20	NaHJ 70PZT	–	–	VNaHJ 70	EHXd 70
Iwasaki	NH.../HV/...	E27	0.98	Z 70...	NaHJ 70	PZ 1000KD20	NaHJ 70PZT	–	–	VNaHJ 70	EHXd 70
Narva	NA.	E27	0.98	Z 70...	NaHJ 70	PZ 1000KD20	NaHJ 70PZT	–	–	VNaHJ 70	EHXd 70
Narva	NA...-D	E27	0.98	Z 70...	NaHJ 70	PZ 1000KD20	NaHJ 70PZT	–	–	VNaHJ 70	EHXd 70
Osram	NAV-E.../E	E27	0.98	Z 70...	NaHJ 70	PZ 1000KD20	NaHJ 70PZT	–	–	VNaHJ 70	EHXd 70
Osram	NAV-E...4Y	E27	0.98	Z 70...	NaHJ 70	PZ 1000KD20	NaHJ 70PZT	–	–	VNaHJ 70	EHXd 70
Osram	NAV-T	E27	0.98	Z 70...	NaHJ 70	PZ 1000KD20	NaHJ 70PZT	–	–	VNaHJ 70	EHXd 70
Osram	NAV-T...4Y	E27	0.98	Z 70...	NaHJ 70	PZ 1000KD20	NaHJ 70PZT	–	–	VNaHJ 70	EHXd 70
Osram	NAV-T...Super 4Y	E27	0.98	Z 70...	NaHJ 70	PZ 1000KD20	NaHJ 70PZT	–	–	VNaHJ 70	EHXd 70
Osram	NAV-TS...Super 4Y	RX7s	0.98	Z 400...	NaHJ 70	PZ 1000KD20	NaHJ 70PZT	HZ 600K	NaHJ 70	VNaHJ 70	EHXd 70
Philips	SON...Hg free	E27	0.98	Z 70...	NaHJ 70	PZ 1000KD20	NaHJ 70PZT	–	–	VNaHJ 70	EHXd 70
Philips	SON...Pro	E27	0.98	Z 70...	NaHJ 70	PZ 1000KD20	NaHJ 70PZT	–	–	VNaHJ 70	EHXd 70
Philips	SON-T...Plus	E27	0.98	Z 70...	NaHJ 70	PZ 1000KD20	NaHJ 70PZT	–	–	VNaHJ 70	EHXd 70
Philips	SON-T...Pro	E27	0.98	Z 70...	NaHJ 70	PZ 1000KD20	NaHJ 70PZT	–	–	VNaHJ 70	EHXd 70
Radium	RNP-E	E27	0.98	Z 70...	NaHJ 70	PZ 1000KD20	NaHJ 70PZT	–	–	VNaHJ 70	EHXd 70
Radium	RNP-T	E27	0.98	Z 70...	NaHJ 70	PZ 1000KD20	NaHJ 70PZT	–	–	VNaHJ 70	EHXd 70
Radium	RNP-TS	RX7s	0.98	Z 400...	NaHJ 70	PZ 1000KD20	NaHJ 70PZT	HZ 600K	NaHJ 70	VNaHJ 70	EHXd 70
Sylvania	SHP	E27	0.98	Z 70...	NaHJ 70	PZ 1000KD20	NaHJ 70PZT	–	–	VNaHJ 70	EHXd 70
Sylvania	SHP-T	E27	0.98	Z 70...	NaHJ 70	PZ 1000KD20	NaHJ 70PZT	–	–	VNaHJ 70	EHXd 70
Sylvania	SHP-TS	E27	0.98	Z 70...	NaHJ 70	PZ 1000KD20	NaHJ 70PZT	–	–	VNaHJ 70	EHXd 70
Sylvania	SHP.../CO-E	E27	0.98	Z 70...	NaHJ 70	PZ 1000KD20	NaHJ 70PZT	–	–	VNaHJ 70	EHXd 70
Sylvania	SHP-S	E27	0.98	Z 70...	NaHJ 70	PZ 1000KD20	NaHJ 70PZT	–	–	VNaHJ 70	EHXd 70
Lamp output 100 W											
BLV	HST-SE	E40	1.20	Z 250..., Z 400...	NaHJ 100	PZ 1000KD20	NaHJ 100PZT	–	–	VNaHJ 100	EHXd 100
GE	LU	E40	1.20	Z 250..., Z 400...	NaHJ 100	PZ 1000KD20	NaHJ 100PZT	–	–	VNaHJ 100	EHXd 100
GE	LU...SBY	E40	1.20	Z 250..., Z 400...	NaHJ 100	PZ 1000KD20	NaHJ 100PZT	–	–	VNaHJ 100	EHXd 100
GE	LU...XO	E40	1.20	Z 250..., Z 400...	NaHJ 100	PZ 1000KD20	NaHJ 100PZT	–	–	VNaHJ 100	EHXd 100
Iwasaki	NH...F	E40	1.20	Z 250..., Z 400...	NaHJ 100	PZ 1000KD20	NaHJ 100PZT	–	–	VNaHJ 100	EHXd 100
Iwasaki	NHT...F	E40	1.20	Z 250..., Z 400...	NaHJ 100	PZ 1000KD20	NaHJ 100PZT	–	–	VNaHJ 100	EHXd 100
Narva	NA.	E40	1.20	Z 250..., Z 400...	NaHJ 100	PZ 1000KD20	NaHJ 100PZT	–	–	VNaHJ 100	EHXd 100
Narva	NA...-D	E40	1.20	Z 250..., Z 400...	NaHJ 100	PZ 1000KD20	NaHJ 100PZT	–	–	VNaHJ 100	EHXd 100
Osram	NAV-E	E40	1.20	Z 250..., Z 400...	NaHJ 100	PZ 1000KD20	NaHJ 100PZT	–	–	VNaHJ 100	EHXd 100
Osram	NAV-E...Super 4Y	E40	1.20	Z 250..., Z 400...	NaHJ 100	PZ 1000KD20	NaHJ 100PZT	–	–	VNaHJ 100	EHXd 100
Osram	NAV-T	E40	1.20	Z 250..., Z 400...	NaHJ 100	PZ 1000KD20	NaHJ 100PZT	–	–	VNaHJ 100	EHXd 100

Lamp Table for Discharge Lamps

High-pressure sodium lamps (HS lamps)

Manufacturer	Designation	Base	Lamp current	Superimposed ignition system		Pulse ignition system		Instant restrike ignition system		Control gear unit	EB
				Ignitor	Ballast	Ignitor	Ballast	Ignitor	Ballast		
Lamp output 100 W											
Osram	NAV-T...Super 4Y	E40	1.20	Z 250..., Z 400...	NaHJ 100	PZ 1000KD20	NaHJ 100PZT	–	–	VNaHJ 100	EHXd 100
Philips	SDW-T	PG12-1	1.30	ignitor/ stabiliser	NaH 100II	–	–	–	–	–	–
Philips	SON...Plus	E40	1.20	Z 250..., Z 400...	NaHJ 100	PZ 1000KD20	NaHJ 100PZT	–	–	VNaHJ 100	EHXd 100
Philips	SON...Pro	E40	1.20	Z 250..., Z 400...	NaHJ 100	PZ 1000KD20	NaHJ 100PZT	–	–	VNaHJ 100	EHXd 100
Philips	SON-T...Hg free	E40	1.20	Z 250..., Z 400...	NaHJ 100	PZ 1000KD20	NaHJ 100PZT	–	–	VNaHJ 100	EHXd 100
Philips	SON-T...Plus	E40	1.20	Z 250..., Z 400...	NaHJ 100	PZ 1000KD20	NaHJ 100PZT	–	–	VNaHJ 100	EHXd 100
Philips	SON-T...Pro	E40	1.20	Z 250..., Z 400...	NaHJ 100	PZ 1000KD20	NaHJ 100PZT	–	–	VNaHJ 100	EHXd 100
Radium	RNP-E	E40	1.20	Z 250..., Z 400...	NaHJ 100	PZ 1000KD20	NaHJ 100PZT	–	–	VNaHJ 100	EHXd 100
Radium	RNP-T	E40	1.20	Z 250..., Z 400...	NaHJ 100	PZ 1000KD20	NaHJ 100PZT	–	–	VNaHJ 100	EHXd 100
Sylvania	SHP-S	E40	1.20	Z 250..., Z 400...	NaHJ 100	PZ 1000KD20	NaHJ 100PZT	–	–	VNaHJ 100	EHXd 100
Sylvania	SHP-T	E40	1.20	Z 250..., Z 400...	NaHJ 100	PZ 1000KD20	NaHJ 100PZT	–	–	VNaHJ 100	EHXd 100
Sylvania	SHP-TS	E40	1.20	Z 250..., Z 400...	NaHJ 100	PZ 1000KD20	NaHJ 100PZT	–	–	VNaHJ 100	EHXd 100
Lamp output 150 W											
BLV	HST-DE	Fc2	1.80	Z 250..., Z 400...	NaHJ 150	PZ 1000KD20	NaHJ 150PZT	HZ 600K	NaHJ 150	VNaHJ 150	EHXd 150
BLV	HST-DE	RX7s	1.80	Z 250..., Z 400...	NaHJ 150	PZ 1000KD20	NaHJ 150PZT	HZ 600K	NaHJ 150	VNaHJ 150	EHXd 150
BLV	HST-SE	E40	1.80	Z 250..., Z 400...	NaHJ 150	PZ 1000KD20	NaHJ 150PZT	–	–	VNaHJ 150	EHXd 150
GE	LU	E40	1.80	Z 250..., Z 400...	NaHJ 150	PZ 1000KD20	NaHJ 150PZT	–	–	VNaHJ 150	EHXd 150
GE	LU...SBY	E40	1.80	Z 250..., Z 400...	NaHJ 150	PZ 1000KD20	NaHJ 150PZT	–	–	VNaHJ 150	EHXd 150
GE	LU...XO	E40	1.80	Z 250..., Z 400...	NaHJ 150	PZ 1000KD20	NaHJ 150PZT	–	–	VNaHJ 150	EHXd 150
Iwasaki	NH	E40	1.80	Z 250..., Z 400...	NaHJ 150	PZ 1000KD20	NaHJ 150PZT	–	–	VNaHJ 150	EHXd 150
Iwasaki	NHT	E40	1.80	Z 250..., Z 400...	NaHJ 150	PZ 1000KD20	NaHJ 150PZT	–	–	VNaHJ 150	EHXd 150
Narva	NA	E40	1.80	Z 250..., Z 400...	NaHJ 150	PZ 1000KD20	NaHJ 150PZT	–	–	VNaHJ 150	EHXd 150
Narva	NA...-D	E40	1.80	Z 250..., Z 400...	NaHJ 150	PZ 1000KD20	NaHJ 150PZT	–	–	VNaHJ 150	EHXd 150
Osram	NAV-E	E40	1.80	Z 250..., Z 400...	NaHJ 150	PZ 1000KD20	NaHJ 150PZT	–	–	VNaHJ 150	EHXd 150
Osram	NAV-E...4Y	E40	1.80	Z 250..., Z 400...	NaHJ 150	PZ 1000KD20	NaHJ 150PZT	–	–	VNaHJ 150	EHXd 150
Osram	NAV-E...Super 4Y	E40	1.80	Z 250..., Z 400...	NaHJ 150	PZ 1000KD20	NaHJ 150PZT	–	–	VNaHJ 150	EHXd 150
Osram	NAV-T	E40	1.80	Z 250..., Z 400...	NaHJ 150	PZ 1000KD20	NaHJ 150PZT	–	–	VNaHJ 150	EHXd 150
Osram	NAV-T...4Y	E40	1.80	Z 250..., Z 400...	NaHJ 150	PZ 1000KD20	NaHJ 150PZT	–	–	VNaHJ 150	EHXd 150
Osram	NAV-T...Super 4Y	E40	1.80	Z 250..., Z 400...	NaHJ 150	PZ 1000KD20	NaHJ 150PZT	–	–	VNaHJ 150	EHXd 150
Osram	NAV-TS...Super 4Y	RX7s	1.80	Z 250..., Z 400...	NaHJ 150	PZ 1000KD20	NaHJ 150PZT	HZ 600K	NaHJ 150	VNaHJ 150	EHXd 150
Philips	SON...Hg free	E40	1.80	Z 250..., Z 400...	NaHJ 150	PZ 1000KD20	NaHJ 150PZT	–	–	VNaHJ 150	EHXd 150
Philips	SON...Plus	E40	1.80	Z 250..., Z 400...	NaHJ 150	PZ 1000KD20	NaHJ 150PZT	–	–	VNaHJ 150	EHXd 150
Philips	SON...Pro	E40	1.80	Z 250..., Z 400...	NaHJ 150	PZ 1000KD20	NaHJ 150PZT	–	–	VNaHJ 150	EHXd 150
Philips	SON...Comfort Pro	E40	1.82	Z 250..., Z 400...	NaHJ 150	PZ 1000KD20	NaHJ 150PZT	–	–	VNaHJ 150	EHXd 150
Philips	SON-T...Hg free	E40	1.80	Z 250..., Z 400...	NaHJ 150	PZ 1000KD20	NaHJ 150PZT	–	–	VNaHJ 150	EHXd 150
Philips	SON-T...Plus	E40	1.80	Z 250..., Z 400...	NaHJ 150	PZ 1000KD20	NaHJ 150PZT	–	–	VNaHJ 150	EHXd 150
Philips	SON-T...Pro	E40	1.80	Z 250..., Z 400...	NaHJ 150	PZ 1000KD20	NaHJ 150PZT	–	–	VNaHJ 150	EHXd 150
Philips	SON-T...Comfort Pro	E40	1.80	Z 250..., Z 400...	NaHJ 150	PZ 1000KD20	NaHJ 150PZT	–	–	VNaHJ 150	EHXd 150
Radium	RNP-E	E40	1.80	Z 250..., Z 400...	NaHJ 150	PZ 1000KD20	NaHJ 150PZT	–	–	VNaHJ 150	EHXd 150
Radium	RNP-T	E40	1.80	Z 250..., Z 400...	NaHJ 150	PZ 1000KD20	NaHJ 150PZT	–	–	VNaHJ 150	EHXd 150
Radium	RNP-TS	RX7s	1.80	Z 250..., Z 400...	NaHJ 150	PZ 1000KD20	NaHJ 150PZT	HZ 600K	NaHJ 150	VNaHJ 150	EHXd 150
Sylvania	SHP-S	E40	1.80	Z 250..., Z 400...	NaHJ 150	PZ 1000KD20	NaHJ 150PZT	–	–	VNaHJ 150	EHXd 150
Sylvania	SHP-T	E40	1.80	Z 250..., Z 400...	NaHJ 150	PZ 1000KD20	NaHJ 150PZT	–	–	VNaHJ 150	EHXd 150
Sylvania	SHP-TS	E40	1.80	Z 250..., Z 400...	NaHJ 150	PZ 1000KD20	NaHJ 150PZT	–	–	VNaHJ 150	EHXd 150
Lamp output 250 W											
BLV	HST-DE	RX7s	3.00	Z 250..., Z 400...	NaHJ 250	PZ 1000KD20	NaHJ 250PZT	HZ 600K	NaHJ 250	VNaHJ 250	EHXd 250
BLV	HST-SE	E40	3.00	Z 250..., Z 400...	NaHJ 250	PZ 1000KD20	NaHJ 250PZT	–	–	VNaHJ 250	EHXd 250
GE	LU	E40	3.00	Z 250..., Z 400...	NaHJ 250	PZ 1000KD20	NaHJ 250PZT	–	–	VNaHJ 250	EHXd 250
GE	LU...SBY	E40	3.00	Z 250..., Z 400...	NaHJ 250	PZ 1000KD20	NaHJ 250PZT	–	–	VNaHJ 250	EHXd 250
GE	LU...TD	RX7s	2.95	Z 250..., Z 400...	NaHJ 250	PZ 1000KD20	NaHJ 250PZT	HZ 600K	NaHJ 250	VNaHJ 250	EHXd 250
GE	LU...XO	E40	2.95	Z 250..., Z 400...	NaHJ 250	PZ 1000KD20	NaHJ 250PZT	–	–	VNaHJ 250	EHXd 250
Iwasaki	NH	E40	3.00	Z 250..., Z 400...	NaHJ 250	PZ 1000KD20	NaHJ 250PZT	–	–	VNaHJ 250	EHXd 250
Iwasaki	NHT	E40	3.00	Z 250..., Z 400...	NaHJ 250	PZ 1000KD20	NaHJ 250PZT	–	–	VNaHJ 250	EHXd 250
Narva	NA	E40	3.00	Z 250..., Z 400...	NaHJ 250	PZ 1000KD20	NaHJ 250PZT	–	–	VNaHJ 250	EHXd 250
Narva	NA...-D	E40	3.00	Z 250..., Z 400...	NaHJ 250	PZ 1000KD20	NaHJ 250PZT	–	–	VNaHJ 250	EHXd 250
Osram	NAV-E	E40	3.00	Z 250..., Z 400...	NaHJ 250	PZ 1000KD20	NaHJ 250PZT	–	–	VNaHJ 250	EHXd 250
Osram	NAV-E...4Y	E40	3.00	Z 250..., Z 400...	NaHJ 250	PZ 1000KD20	NaHJ 250PZT	–	–	VNaHJ 250	EHXd 250
Osram	NAV-E...Super 4Y	E40	3.00	Z 250..., Z 400...	NaHJ 250	PZ 1000KD20	NaHJ 250PZT	–	–	VNaHJ 250	EHXd 250
Osram	NAV-T	E40	3.00	Z 250..., Z 400...	NaHJ 250	PZ 1000KD20	NaHJ 250PZT	–	–	VNaHJ 250	EHXd 250

Lamp Table for Discharge Lamps

High-pressure sodium lamps (HS lamps)

Manufacturer	Designation	Base	Lamp	Superimposed ignition system		Pulse ignition system		Instant restrike ignition system		Control	EB
			current	Ignitor	Ballast	Ignitor	Ballast	Ignitor	Ballast	gear unit	
Lamp output 250 W											
Osram	NAV-T...4Y	E40	3.00	Z 250..., Z 400...	NaHJ 250	PZ 1000KD20	NaHJ 250PZT	–	–	VNaHJ 250	EHXd 250
Osram	NAV-T...Super 4Y	E40	3.00	Z 250..., Z 400...	NaHJ 250	PZ 1000KD20	NaHJ 250PZT	–	–	VNaHJ 250	EHXd 250
Osram	NAV-TS	RX7s	3.00	Z 250..., Z 400...	NaHJ 250	PZ 1000KD20	NaHJ 250PZT	HZ 600K	NaHJ 250	VNaHJ 250	EHXd 250
Philips	SON...Hg free	E40	3.00	Z 250..., Z 400...	NaHJ 250	PZ 1000KD20	NaHJ 250PZT	–	–	VNaHJ 250	EHXd 250
Philips	SON...Plus	E40	3.00	Z 250..., Z 400...	NaHJ 250	PZ 1000KD20	NaHJ 250PZT	–	–	VNaHJ 250	EHXd 250
Philips	SON...Pro	E40	3.00	Z 250..., Z 400...	NaHJ 250	PZ 1000KD20	NaHJ 250PZT	–	–	VNaHJ 250	EHXd 250
Philips	SON...Comfort Pro	E40	3.00	Z 250..., Z 400...	NaHJ 250	PZ 1000KD20	NaHJ 250PZT	–	–	VNaHJ 250	EHXd 250
Philips	SON-T...Hg free	E40	3.00	Z 250..., Z 400...	NaHJ 250	PZ 1000KD20	NaHJ 250PZT	–	–	VNaHJ 250	EHXd 250
Philips	SON-T...Plus	E40	3.00	Z 250..., Z 400...	NaHJ 250	PZ 1000KD20	NaHJ 250PZT	–	–	VNaHJ 250	EHXd 250
Philips	SON-T...Pro	E40	3.00	Z 250..., Z 400...	NaHJ 250	PZ 1000KD20	NaHJ 250PZT	–	–	VNaHJ 250	EHXd 250
Philips	SON-T...Comfort Pro	E40	3.00	Z 250..., Z 400...	NaHJ 250	PZ 1000KD20	NaHJ 250PZT	–	–	VNaHJ 250	EHXd 250
Radium	RNP-E	E40	3.00	Z 250..., Z 400...	NaHJ 250	PZ 1000KD20	NaHJ 250PZT	–	–	VNaHJ 250	EHXd 250
Radium	RNP-T	E40	3.00	Z 250..., Z 400...	NaHJ 250	PZ 1000KD20	NaHJ 250PZT	–	–	VNaHJ 250	EHXd 250
Sylvania	SHP	E40	3.00	Z 250..., Z 400...	NaHJ 250	PZ 1000KD20	NaHJ 250PZT	–	–	VNaHJ 250	EHXd 250
Sylvania	SHP-T	E40	3.00	Z 250..., Z 400...	NaHJ 250	PZ 1000KD20	NaHJ 250PZT	–	–	VNaHJ 250	EHXd 250
Sylvania	SHP-S	E40	2.95	Z 250..., Z 400...	NaHJ 250	PZ 1000KD20	NaHJ 250PZT	–	–	VNaHJ 250	EHXd 250
Sylvania	SHP-TS	E40	2.95	Z 250..., Z 400...	NaHJ 250	PZ 1000KD20	NaHJ 250PZT	–	–	VNaHJ 250	EHXd 250
Lamp output 400 W											
BLV	HST-DE	RX7s	4.40	Z 400..., Z 1000...	NaHJ 400	PZ 1000KD20	NaHJ 400PZT	HZ 600K	NaHJ 400	VNaHJ 400	–
BLV	HST-SE	E40	4.40	Z 400..., Z 1000...	NaHJ 400	PZ 1000KD20	NaHJ 400PZT	–	–	VNaHJ 400	–
GE	LU	E40	4.60	Z 400..., Z 1000...	NaHJ 400	PZ 1000KD20	NaHJ 400PZT	–	–	VNaHJ 400	–
GE	LU...PSL	E40	4.30	Z 400..., Z 1000...	NaHJ 400	PZ 1000KD20	NaHJ 400PZT	–	–	VNaHJ 400	–
GE	LU...SBY	E40	4.45	Z 400..., Z 1000...	NaHJ 400	PZ 1000KD20	NaHJ 400PZT	–	–	VNaHJ 400	–
GE	LU...TD	RX7s	4.40	Z 400..., Z 1000...	NaHJ 400	PZ 1000KD20	NaHJ 400PZT	HZ 600K	NaHJ 400	VNaHJ 400	–
GE	LU...XO	E40	4.50	Z 400..., Z 1000...	NaHJ 400	PZ 1000KD20	NaHJ 400PZT	–	–	VNaHJ 400	–
Iwasaki	NH	E40	4.60	Z 400..., Z 1000...	NaHJ 400	PZ 1000KD20	NaHJ 400PZT	–	–	VNaHJ 400	–
Iwasaki	NHT	E40	4.60	Z 400..., Z 1000...	NaHJ 400	PZ 1000KD20	NaHJ 400PZT	–	–	VNaHJ 400	–
Narva	NA	E40	4.45	Z 400..., Z 1000...	NaHJ 400	PZ 1000KD20	NaHJ 400PZT	–	–	VNaHJ 400	–
Narva	NA...-D	E40	4.45	Z 400..., Z 1000...	NaHJ 400	PZ 1000KD20	NaHJ 400PZT	–	–	VNaHJ 400	–
Narva	NA...-S	E40	4.45	Z 400..., Z 1000...	NaHJ 400	PZ 1000KD20	NaHJ 400PZT	–	–	VNaHJ 400	–
Osram	NAV-E	E40	4.45	Z 400..., Z 1000...	NaHJ 400	PZ 1000KD20	NaHJ 400PZT	–	–	VNaHJ 400	–
Osram	NAV-E...4Y	E40	4.45	Z 400..., Z 1000...	NaHJ 400	PZ 1000KD20	NaHJ 400PZT	–	–	VNaHJ 400	–
Osram	NAV-E...Super 4Y	E40	4.40	Z 400..., Z 1000...	NaHJ 400	PZ 1000KD20	NaHJ 400PZT	–	–	VNaHJ 400	–
Osram	NAV-T	E40	4.40	Z 400..., Z 1000...	NaHJ 400	PZ 1000KD20	NaHJ 400PZT	–	–	VNaHJ 400	–
Osram	NAV-T...4Y	E40	4.40	Z 400..., Z 1000...	NaHJ 400	PZ 1000KD20	NaHJ 400PZT	–	–	VNaHJ 400	–
Osram	NAV-T...Super 4Y	E40	4.40	Z 400..., Z 1000...	NaHJ 400	PZ 1000KD20	NaHJ 400PZT	–	–	VNaHJ 400	–
Osram	NAV-TS	RX7s	4.40	Z 400..., Z 1000...	NaHJ 400	PZ 1000KD20	NaHJ 400PZT	HZ 600K	NaHJ 400	VNaHJ 400	–
Osram	Plantastar	E40	4.40	Z 400..., Z 1000...	NaHJ 400	PZ 1000KD20	NaHJ 400PZT	–	–	VNaHJ 400	–
Philips	SON...Hg free	E40	4.50	Z 400..., Z 1000...	NaHJ 400	PZ 1000KD20	NaHJ 400PZT	–	–	VNaHJ 400	–
Philips	SON...Plus	E40	4.50	Z 400..., Z 1000...	NaHJ 400	PZ 1000KD20	NaHJ 400PZT	–	–	VNaHJ 400	–
Philips	SON...Pro	E40	4.45	Z 400..., Z 1000...	NaHJ 400	PZ 1000KD20	NaHJ 400PZT	–	–	VNaHJ 400	–
Philips	SON...Comfort Pro	E40	4.60	Z 400..., Z 1000...	NaHJ 400	PZ 1000KD20	NaHJ 400PZT	–	–	VNaHJ 400	–
Philips	SON-T...Agro	E40	4.13	Z 400..., Z 1000...	NaHJ 400	PZ 1000KD20	NaHJ 400PZT	–	–	VNaHJ 400	–
Philips	SON-T... Green Power	E40	4.23	Z 400..., Z 1000...	NaHJ 400	PZ 1000KD20	NaHJ 400PZT	–	–	VNaHJ 400	–
Philips	SON-T...Hg free	E40	4.60	Z 400..., Z 1000...	NaHJ 400	PZ 1000KD20	NaHJ 400PZT	–	–	VNaHJ 400	–
Philips	SON-T...Plus	E40	4.50	Z 400..., Z 1000...	NaHJ 400	PZ 1000KD20	NaHJ 400PZT	–	–	VNaHJ 400	–
Philips	SON-T...Pro	E40	4.60	Z 400..., Z 1000...	NaHJ 400	PZ 1000KD20	NaHJ 400PZT	–	–	VNaHJ 400	–
Philips	SON-T...Comfort Pro	E40	4.45	Z 400..., Z 1000...	NaHJ 400	PZ 1000KD20	NaHJ 400PZT	–	–	VNaHJ 400	–
Radium	RNP-E	E40	4.60	Z 400..., Z 1000...	NaHJ 400	PZ 1000KD20	NaHJ 400PZT	–	–	VNaHJ 400	–
Radium	RNP-T	E40	4.60	Z 400..., Z 1000...	NaHJ 400	PZ 1000KD20	NaHJ 400PZT	–	–	VNaHJ 400	–
Sylvania	SHP	E40	4.60	Z 400..., Z 1000...	NaHJ 400	PZ 1000KD20	NaHJ 400PZT	–	–	VNaHJ 400	–
Sylvania	SHP-S	E40	4.50	Z 400..., Z 1000...	NaHJ 400	PZ 1000KD20	NaHJ 400PZT	–	–	VNaHJ 400	–
Sylvania	SHP-TS	E40	4.50	Z 400..., Z 1000...	NaHJ 400	PZ 1000KD20	NaHJ 400PZT	–	–	VNaHJ 400	–
Sylvania	SHP-TS...Gro-Lux	E40	4.00	Z 400..., Z 1000...	NaHJ 400	PZ 1000KD20	NaHJ 400PZT	–	–	VNaHJ 400	–
Lamp output 600 W											
GE	LU...PSL	E40	6.00	Z 750...	NaH 600	PZ 1000KD20	NaH 600PZT	–	–	VNaH 600	–
GE	LU...XO	E40	6.00	Z 750...	NaH 600	PZ 1000KD20	NaH 600PZT	–	–	VNaH 600	–
GE	LU 400V/600W PSL	E40	3.60	Z 1000/400V	NaH 600/400V	PZ 1000/400V A5	NaH 600PZT/400V	–	–	–	–
Narva	NA	E40	6.20	Z 750...	NaH 600	PZ 1000KD20	NaH 600PZT	–	–	VNaH 600	–
Narva	NA...-S	E40	6.20	Z 750...	NaH 600	PZ 1000KD20	NaH 600PZT	–	–	VNaH 600	–

Lamp Table for Discharge Lamps

High-pressure sodium lamps (HS lamps)

Manufacturer	Designation	Base	Lamp current	Superimposed ignition system		Pulse ignition system		Instant restrike ignition system		Control gear unit	EB
				Ignitor	Ballast	Ignitor	Ballast	Ignitor	Ballast		
Lamp output 600 W											
Osram	NAV-T....Super 4Y	E40	6.20	Z 750...	NaH 600	PZ 1000KD20	NaH 600PZT	–	–	VNaH 600	–
Osram	Plantastar 600	E40	6.20	Z 750...	NaH 600	PZ 1000KD20	NaH 600PZT	–	–	VNaH 600	–
Philips	SON-T...Plus	E40	5.80	Z 750...	NaH 600	PZ 1000KD20	NaH 600PZT	–	–	VNaH 600	–
Philips	SON-T... Green Power	E40	6.30	Z 750...	NaH 600	PZ 1000KD20	NaH 600PZT	–	–	VNaH 600	–
Philips	SON-T 600W/400V Green Power	E40	3.62	Z 1000/400V	NaH 600/400V	PZ 1000/ 400V A5	NaH 600PZT/ 400V	–	–	–	–
Philips	SON-T 600W EL 400V Green Power*	E40	2.93-2.24	–	–	–	–	–	–	–	–
Radium	RNP-T	E40	6.20	Z 750...	NaH 600	PZ 1000KD20	NaH 600PZT	–	–	VNaH 600	–
Sylvania	SHP-TS	E40	5.90	Z 750...	NaH 600	PZ 1000KD20	NaH 600PZT	–	–	VNaH 600	–
Sylvania	SHP-TS...Gro-Lux	E40	5.50	Z 750...	NaH 600	PZ 1000KD20	NaH 600PZT	–	–	VNaH 600	–
Lamp output 750 W											
GE	LU...PSL	E40	7.00	Z 750...	NaH 750	PZ 1000KD20	NaH 750/600PZT	–	–	–	–
GE	LU 400V/750W PSL	E40	4.40	Z 1000/400V	NaH 750/400V	PZ 1000/400V A5	NaHJ 750PZT	–	–	–	–
Lamp output 1000 W											
GE	LU...T	E40	10.60	Z 1000...	NaH 1000, NaHJD 1000	PZ 1000KD20	–	–	–	–	–
GE	LU...D	E40	10.30	Z 1000...	NaH 1000, NaHJD 1000	PZ 1000KD20	–	–	–	–	–
GE	LU...TD	RX7s	10.30	Z 1000...	NaH 1000, NaHJD 1000	PZ 1000KD20	–	–	–	–	–
Iwasaki	NH	E40	10.30	Z 1000...	NaH 1000, NaHJD 1000	PZ 1000KD20	–	–	–	–	–
Iwasaki	NHT	E40	10.30	Z 1000...	NaH 1000, NaHJD 1000	PZ 1000KD20	–	–	–	–	–
Narva	NA	E40	10.60	Z 1000...	NaH 1000, NaHJD 1000	PZ 1000KD20	–	–	–	–	–
Narva	NA...D	E40	10.60	Z 1000...	NaH 1000, NaHJD 1000	PZ 1000KD20	–	–	–	–	–
Narva	NAT-VEG 1000/400V	E40	5.70	Z 1000/400V, Z 2000/400V	–	PZ 1000/ 400V A5	–	–	–	–	–
Osram	NAV-E	E40	10.30	Z 1000...	NaH 1000, NaHJD 1000	PZ 1000KD20	–	–	–	–	–
Osram	NAV-T	E40	10.30	Z 1000...	NaH 1000, NaHJD 1000	PZ 1000KD20	–	–	–	–	–
Philips	SON...Pro	E40	10.30	Z 1000...	NaH 1000, NaHJD 1000	PZ 1000KD20	–	–	–	–	–
Philips	SON-T...Pro	E40	10.60	Z 1000...	NaH 1000, NaHJD 1000	PZ 1000KD20	–	–	–	–	–
Philips	SON-T 1000W EL 400V Green Power**	Wire	4-3.17	–	–	–	–	–	–	–	–
Radium	RNP-E	E40	10.30	Z 1000...	NaH 1000, NaHJD 1000	PZ 1000KD20	–	–	–	–	–
Radium	RNP-T	E40	10.30	Z 1000...	NaH 1000, NaHJD 1000	PZ 1000KD20	–	–	–	–	–
Sylvania	SHP-T	E40	10.60	Z 1000...	NaH 1000, NaHJD 1000	PZ 1000KD20	–	–	–	–	–
Sylvania	SHP-T...SBY	E40	10.60	Z 1000...	NaH 1000, NaHJD 1000	PZ 1000KD20	–	–	–	–	–

* Voltage range 210-275 V ** Voltage range 250-315 V

Lamp Table for Discharge Lamps

Metal halide lamps (HI lamps)

Manufacturer	Designation	Base	Lamp current	Superimposed ignition system		Pulse ignition system		Instant restrike ignition system		Control gear unit	EB
				Ignitor	Ballast	Ignitor	Ballast	Ignitor	Ballast		
Lamp output 70 W											
BLV	HIE	E27	0.90	Z 250..., Z 400...	NaHJ 70	PZ 1000KD20	NaHJ 70PZT	–	–	VNaHJ 70	EHXc 70
BLV	HIE-P	E27	0.90	Z 250..., Z 400...	NaHJ 70	PZ 1000KD20	NaHJ 70PZT	–	–	VNaHJ 70	EHXc 70
BLV	HIT	G12	0.90	Z 250..., Z 400...	NaHJ 70	PZ 1000KD20	NaHJ 70PZT	–	–	VNaHJ 70	EHXc 70
BLV	HIT-DE	RX7s	0.90	Z 250..., Z 400...	NaHJ 70	PZ 1000KD20	NaHJ 70PZT	–	–	VNaHJ 70	EHXc 70
GE	ARC	G12	0.95	Z 250..., Z 400...	NaHJ 70	PZ 1000KD20	NaHJ 70PZT	–	–	VNaHJ 70	EHXc 70
GE	ARC	Rx7s	0.95	Z 250..., Z 400...	NaHJ 70	PZ 1000KD20	NaHJ 70PZT	HZ 600K	NaHJ 70	VNaHJ 70	EHXc 70
Iwasaki	M	E27	1.00	Z 250..., Z 400...	NaHJ 70	PZ 1000KD20	NaHJ 70PZT	–	–	VNaHJ 70	EHXc 70
Iwasaki	MT	E27	1.00	Z 70...	NaHJ 70	PZ 1000KD20	NaHJ 70PZT	–	–	VNaHJ 70	EHXc 70
Iwasaki	MT	G8.5	1.00	Z 250..., Z 400...	NaHJ 70	PZ 1000KD20	NaHJ 70PZT	–	–	VNaHJ 70	EHXc 70
Iwasaki	MT	G12	1.00	Z 250..., Z 400...	NaHJ 70	PZ 1000KD20	NaHJ 70PZT	–	–	VNaHJ 70	EHXc 70
Narva	NC...	E27; G12	0.90	Z 250..., Z 400...	NaHJ 70	PZ 1000KD20	NaHJ 70PZT	–	–	VNaHJ 70	EHXc 70
Narva	NC...	RX7s	0.90	Z 250..., Z 400...	NaHJ 70	PZ 1000KD20	NaHJ 70PZT	HZ 600K	NaHJ 70	VNaHJ 70	EHXc 70
Osram	HQI-E	E27	0.95 - 1.00	Z 250..., Z 400...	NaHJ 70	PZ 1000KD20	NaHJ 70PZT	–	–	VNaHJ 70	EHXc 70
Osram	HQI-T	G12	1.00	Z 250..., Z 400...	NaHJ 70	PZ 1000KD20	NaHJ 70PZT	–	–	VNaHJ 70	EHXc 70
Osram	HQI-TS	RX7s	1.00	Z 250..., Z 400...	NaHJ 70	PZ 1000KD20	NaHJ 70PZT	HZ 600K	NaHJ 70	VNaHJ 70	EHXc 70
Philips	MHN-TD	RX7s	1.00	Z 250..., Z 400...	NaHJ 70	PZ 1000KD20	NaHJ 70PZT	HZ 600K	NaHJ 70	VNaHJ 70	EHXc 70
Philips	MHW-TD	RX7s	1.00	Z 250..., Z 400...	NaHJ 70	PZ 1000KD20	NaHJ 70PZT	HZ 600K	NaHJ 70	VNaHJ 70	EHXc 70
Radium	HRI-E	E27	0.95	Z 250..., Z 400...	NaHJ 70	PZ 1000KD20	NaHJ 70PZT	–	–	VNaHJ 70	EHXc 70
Radium	HRI-T	G12	1.00	Z 250..., Z 400...	NaHJ 70	PZ 1000KD20	NaHJ 70PZT	–	–	VNaHJ 70	EHXc 70
Radium	HRI-TS	RX7s	1.00	Z 250..., Z 400...	NaHJ 70	PZ 1000KD20	NaHJ 70PZT	HZ 600K	NaHJ 70	VNaHJ 70	EHXc 70
Sylvania	HSI-MP	E27	1.00	Z 250..., Z 400...	NaHJ 70	PZ 1000KD20	NaHJ 70PZT	–	–	VNaHJ 70	EHXc 70
Sylvania	HSI-T	G12	0.95	Z 250..., Z 400...	NaHJ 70	PZ 1000KD20	NaHJ 70PZT	–	–	VNaHJ 70	EHXc 70
Sylvania	HSI-TD	RX7s	0.98	Z 250..., Z 400...	NaHJ 70	PZ 1000KD20	NaHJ 70PZT	HZ 600K	NaHJ 70	VNaHJ 70	EHXc 70
Venture	HIE	E27	0.90	Z 250..., Z 400...	NaHJ 70	PZ 1000KD20	NaHJ 70PZT	–	–	VNaHJ 70	EHXc 70
Venture	HIPE	E27	0.90	Z 250..., Z 400...	NaHJ 70	PZ 1000KD20	NaHJ 70PZT	–	–	VNaHJ 70	EHXc 70
Venture	HIT	E27	0.90	Z 250..., Z 400...	NaHJ 70	PZ 1000KD20	NaHJ 70PZT	–	–	VNaHJ 70	EHXc 70
Venture	HIT	G12	0.90	Z 250..., Z 400...	NaHJ 70	PZ 1000KD20	NaHJ 70PZT	–	–	VNaHJ 70	EHXc 70
Venture	MH-DE	RX7s	1.00	Z 250..., Z 400...	NaHJ 70	PZ 1000KD20	NaHJ 70PZT	–	–	VNaHJ 70	EHXc 70
Lamp output 100 W											
BLV	HIE	E27	1.20	Z 250..., Z 400...	NaHJ 100	PZ 1000KD20	NaHJ 100PZT	–	–	VNaHJ 100	–
BLV	HIE-P	E27	1.20	Z 250..., Z 400...	NaHJ 100	PZ 1000KD20	NaHJ 100PZT	–	–	VNaHJ 100	–
Narva	NC...	E27; E40	1.10	Z 250..., Z 400...	NaHJ 100	PZ 1000KD20	NaHJ 100PZT	–	–	VNaHJ 100	–
Osram	HQI-E	E27	1.10	Z 250..., Z 400...	NaHJ 100	PZ 1000KD20	NaHJ 100PZT	–	–	VNaHJ 100	–
Radium	HRI-E	E27	1.10	Z 250..., Z 400...	NaHJ 100	PZ 1000KD20	NaHJ 100PZT	–	–	VNaHJ 100	–
Sylvania	HSI-MP	E27	1.15	Z 250..., Z 400...	NaHJ 100	PZ 1000KD20	NaHJ 100PZT	–	–	VNaHJ 100	–
Venture	HIE	E27	1.10	Z 250..., Z 400...	NaHJ 100	PZ 1000KD20	NaHJ 100PZT	–	–	VNaHJ 100	–
Venture	HIPE	E27; E40	1.10	Z 250..., Z 400...	NaHJ 100	PZ 1000KD20	NaHJ 100PZT	–	–	VNaHJ 100	–
Venture	HIT	E27; E40	1.10	Z 250..., Z 400...	NaHJ 100	PZ 1000KD20	NaHJ 100PZT	–	–	VNaHJ 100	–
Lamp output 150 W											
BLV	HIE	E27	1.80	Z 250..., Z 400...	NaHJ 150	PZ 1000KD20	NaHJ 150PZT	–	–	VNaHJ 150	EHXc 150
BLV	HIE-P	E27	1.80	Z 250..., Z 400...	NaHJ 150	PZ 1000KD20	NaHJ 150PZT	–	–	VNaHJ 150	EHXc 150
BLV	HIT	G12; E27; E40	1.80	Z 250..., Z 400...	NaHJ 150	PZ 1000KD20	NaHJ 150PZT	–	–	VNaHJ 150	EHXc 150
BLV	HIT-DE	RX7s-24	1.80	Z 250..., Z 400...	NaHJ 150	PZ 1000KD20	NaHJ 150PZT	HZ 1000K	NaHJ 150	VNaHJ 150	EHXc 150
GE	ARC	G12	1.80	Z 250..., Z 400...	NaHJ 150	PZ 1000KD20	NaHJ 150PZT	–	–	VNaHJ 150	EHXc 150
GE	ARC	RX7s-24	1.80	Z 250..., Z 400...	NaHJ 150	PZ 1000KD20	NaHJ 150PZT	HZ 1000K	NaHJ 150	VNaHJ 150	EHXc 150
Iwasaki	M	E27	1.90	Z 250..., Z 400...	NaHJ 150	PZ 1000KD20	NaHJ 150PZT	–	–	VNaHJ 150	EHXc 150
Iwasaki	MT	E27	1.90	Z 250..., Z 400...	NaHJ 150	PZ 1000KD20	NaHJ 150PZT	–	–	VNaHJ 150	EHXc 150
Iwasaki	MT	G12	1.90	Z 250..., Z 400...	NaHJ 150	PZ 1000KD20	NaHJ 150PZT	–	–	VNaHJ 150	EHXc 150
Iwasaki	MTD	RX7s	1.90	Z 250..., Z 400...	NaHJ 150	PZ 1000KD20	NaHJ 150PZT	HZ 1000K	NaHJ 150	VNaHJ 150	EHXc 150
Narva	NC...	E27; E40; G12	1.80	Z 250..., Z 400...	NaHJ 150	PZ 1000KD20	NaHJ 150PZT	–	–	VNaHJ 150	EHXc 150
Narva	NC...	RX7s	1.80	Z 250..., Z 400...	NaHJ 150	PZ 1000KD20	NaHJ 150PZT	HZ 1000K	NaHJ 150	VNaHJ 150	EHXc 150
Osram	HQI-E	E27	1.80	Z 250..., Z 400...	NaHJ 150	PZ 1000KD20	NaHJ 150PZT	–	–	VNaHJ 150	EHXc 150
Osram	HQI-R	connector	1.80	Z 250..., Z 400...	NaHJ 150	PZ 1000KD20	NaHJ 150PZT	–	–	VNaHJ 150	–
Osram	HQI-T	G12	1.80	Z 250..., Z 400...	NaHJ 150	PZ 1000KD20	NaHJ 150PZT	–	–	VNaHJ 150	EHXc 150
Osram	HQI-TS	RX7s-24	1.80	Z 250..., Z 400...	NaHJ 150	PZ 1000KD20	NaHJ 150PZT	HZ 1000K	NaHJ 150	VNaHJ 150	EHXc 150
Philips	MHN-TD	RX7s	1.80	Z 250..., Z 400...	NaHJ 150	PZ 1000KD20	NaHJ 150PZT	HZ 1000K	NaHJ 150	VNaHJ 150	EHXc 150
Philips	MHW-TD	RX7s	1.80	Z 250..., Z 400...	NaHJ 150	PZ 1000KD20	NaHJ 150PZT	HZ 1000K	NaHJ 150	VNaHJ 150	EHXc 150
Radium	HRI-E	E27	1.80	Z 250..., Z 400...	NaHJ 150	PZ 1000KD20	NaHJ 150PZT	–	–	VNaHJ 150	EHXc 150
Radium	HRI-T	G12	1.80	Z 250..., Z 400...	NaHJ 150	PZ 1000KD20	NaHJ 150PZT	–	–	VNaHJ 150	EHXc 150
Radium	HRI-TS	RX7s	1.80	Z 250..., Z 400...	NaHJ 150	PZ 1000KD20	NaHJ 150PZT	HZ 1000K	NaHJ 150	VNaHJ 150	EHXc 150

Lamp Table for Discharge Lamps

Metal halide lamps (HI lamps)

Manufacturer	Designation	Base	Lamp current	Superimposed ignition system		Pulse ignition system		Instant restrike ignition system		Control gear unit	EB
				Ignitor	Ballast	Ignitor	Ballast	Ignitor	Ballast		
Lamp output 150 W											
Sylvania	HSI-MP	E27	1.80	Z 250..., Z 400...	NaHJ 150	PZ 1000KD20	NaHJ 150PZT	–	–	VNaHJ 150	EHXc 150
Sylvania	HSI-T	G12	1.80	Z 250..., Z 400...	NaHJ 150	PZ 1000KD20	NaHJ 150PZT	–	–	VNaHJ 150	EHXc 150
Sylvania	HSI-TD	RX7s	1.80	Z 250..., Z 400...	NaHJ 150	PZ 1000KD20	NaHJ 150PZT	HZ 1000K	NaHJ 150	VNaHJ 150	EHXc 150
Venture	HIE	E27	1.80	Z 250..., Z 400...	NaHJ 150	PZ 1000KD20	NaHJ 150PZT	–	–	VNaHJ 150	EHXc 150
Venture	HIPE	E27; E40	1.80	Z 250..., Z 400...	NaHJ 150	PZ 1000KD20	NaHJ 150PZT	–	–	VNaHJ 150	EHXc 150
Venture	HIT	E27; E40	1.80	Z 250..., Z 400...	NaHJ 150	PZ 1000KD20	NaHJ 150PZT	–	–	VNaHJ 150	EHXc 150
Venture	HIT	G12	1.80	Z 250..., Z 400...	NaHJ 150	PZ 1000KD20	NaHJ 150PZT	–	–	VNaHJ 150	EHXc 150
Venture	MH-DE	RX7s	1.80	Z 250..., Z 400...	NaHJ 150	PZ 1000KD20	NaHJ 150PZT	HZ 1000K	NaHJ 150	VNaHJ 150	EHXc 150
Lamp output 250 W											
BLV	HIE	E40	3.00	Z 250..., Z 400...	NaHJ 250	PZ 1000KD20	NaHJ 250PZT	–	–	VNaHJ 250	–
BLV	HIT	E40	3.00	Z 250..., Z 400...	NaHJ 250	PZ 1000KD20	NaHJ 250PZT	–	–	VNaHJ 250	–
BLV	HIT-DE	Fc2	3.00	Z 250..., Z 400...	NaHJ 250	PZ 1000KD20	NaHJ 250PZT	HZ 1000K	NaHJ 250	VNaHJ 250	–
GE	ARC250/T	E40	2.75	Z 250..., Z 400...	NaHJ 250	PZ 1000KD20	NaHJ 250PZT	–	–	VNaHJ 250	–
GE	ARC250/TD	Fc2	3.00	Z 250..., Z 400...	NaHJ 250	PZ 1000KD20	NaHJ 250PZT	HZ 1000K	NaHJ 250	VNaHJ 250	–
Narva	NC...	E40	2.15	Z 250..., Z 400...	NaHJ 250	PZ 1000KD20	NaHJ 250PZT	–	–	VNaHJ 250	–
Narva	NC...-P	E40	2.15	–	–	PZI 1000/1	Q 250	–	–	–	–
Osram	HQI-E	E40	3.00	Z 250..., Z 400...	NaHJ 250	PZ 1000KD20	NaHJ 250PZT	–	–	VNaHJ 250	–
Osram	HQI-E/P	E40	3.00	Z 250..., Z 400...	NaHJ 250	PZ 1000KD20	NaHJ 250PZT	–	–	VNaHJ 250	–
Osram	HQI-T	E40	3.00	Z 250..., Z 400...	NaHJ 250	PZ 1000KD20	NaHJ 250PZT	–	–	VNaHJ 250	–
Osram	HQI-TS	Fc2	3.00	Z 250..., Z 400...	NaHJ 250	PZ 1000KD20	NaHJ 250PZT	HZ 1000K	NaHJ 250	VNaHJ 250	–
Philips	HPI Plus	E40	2.20	–	–	PZI 1000/1	Q 250	–	–	–	–
Philips	HPI-T	E40	2.15	–	–	PZI 1000/1	Q 250	–	–	–	–
Philips	MHN-TD	Fc2	3.00	Z 250..., Z 400...	NaHJ 250	PZ 1000KD20	NaHJ 250PZT	–	–	VNaHJ 250	–
Radium	HRI-E	E40	3.00	Z 250..., Z 400...	NaHJ 250	PZ 1000KD20	NaHJ 250PZT	–	–	VNaHJ 250	–
Radium	HRI-T	E40	3.00	Z 250..., Z 400...	NaHJ 250	PZ 1000KD20	NaHJ 250PZT	–	–	VNaHJ 250	–
Radium	HRI-TS	Fc2	3.00	Z 250..., Z 400...	NaHJ 250	PZ 1000KD20	NaHJ 250PZT	HZ 1000K	NaHJ 250	VNaHJ 250	–
Sylvania	HSI-HX	E40	2.10	–	–	PZI 1000/1	Q 250	–	–	–	–
Sylvania	HSI-T	E40	3.00	Z 250..., Z 400...	NaHJ 250	PZ 1000KD20	NaHJ 250PZT	–	–	VNaHJ 250	–
Sylvania	HSI-TD	Fc2	3.00	Z 250..., Z 400...	NaHJ 250	PZ 1000KD20	NaHJ 250PZT	HZ 1000K	NaHJ 250	VNaHJ 250	–
Sylvania	HSI-THX	E40	2.10	–	–	PZI 1000/1	Q 250	–	–	–	–
Sylvania	HSI-TSX	E40	2.90	Z 250..., Z 400...	NaHJ 250	PZ 1000KD20	NaHJ 250PZT	–	–	VNaHJ 250	–
Sylvania	HSI-SX	E40	2.90	Z 250..., Z 400...	NaHJ 250	PZ 1000KD20	NaHJ 250PZT	–	–	VNaHJ 250	–
Venture	HIE	E40	3.10	Z 250..., Z 400...	NaHJ 250	PZ 1000KD20	NaHJ 250PZT	–	–	VNaHJ 250	–
Venture	HIPE	E40	3.10	Z 250..., Z 400...	NaHJ 250	PZ 1000KD20	NaHJ 250PZT	–	–	VNaHJ 250	–
Venture	HIT	E40	3.10	Z 250..., Z 400...	NaHJ 250	PZ 1000KD20	NaHJ 250PZT	–	–	VNaHJ 250	–
Venture	HIT...EURO	E40	2.10	–	–	PZI 1000/1	Q 250	–	–	–	–
Venture	MH-DE	Fc2	3.10	Z 250..., Z 400...	NaHJ 250	PZ 1000KD20	NaHJ 250PZT	HZ 1000K	NaHJ 250	VNaHJ 250	–
Lamp output 400 W											
BLV	HIE	E40	4.00	Z 400..., Z 1000...	NaHJ 400	PZ 1000KD20	NaHJ 400PZT	–	–	VNaHJ 400	–
BLV	HIT	E40	4.00	Z 400..., Z 1000...	NaHJ 400	PZ 1000KD20	NaHJ 400PZT	–	–	VNaHJ 400	–
GE	ARC400/T	E40	4.35	Z 400..., Z 1000...	NaHJ 400	PZ 1000KD20	NaHJ 400PZT	–	–	VNaHJ 400	–
Narva	NC...	E40	3.25	Z 400..., Z 1000...	NaHJ 400	PZ 1000KD20	NaHJ 400PZT	–	–	VNaHJ 400	–
Narva	NC...-P	E40	3.25	–	–	PZI 1000/1	Q 400	–	–	–	–
Osram	HQI-E	E40	3.50	Z 400..., Z 1000...	NaHJ 400	PZ 1000KD20	NaHJ 400PZT	–	–	VNaHJ 400	–
Osram	HQI-E/P	E40	3.50	Z 400..., Z 1000...	NaHJ 400	PZ 1000KD20	NaHJ 400PZT	–	–	VNaHJ 400	–
Osram	HQI-T	E40	3.60	Z 400..., Z 1000...	NaHJ 400	PZ 1000KD20	NaHJ 400PZT	–	–	VNaHJ 400	–
Osram	HQI-TS	Fc2	3.60	Z 400..., Z 1000...	NaHJ 400	PZ 1000KD20	NaHJ 400PZT	HZ 1000K	NaHJ 400	VNaHJ 400	–
Philips	HPI-T	E40	3.40	–	–	PZI 1000/1	Q 400	–	–	–	–
Philips	MH-T	E40	3.40	Z 400..., Z 1000...	NaHJ 400	PZ 1000KD20	NaHJ 400PZT	–	–	VNaHJ 400	–
Radium	HRI-BT	E40	4.00	Z 400..., Z 1000...	NaHJ 400	PZ 1000KD20	NaHJ 400PZT	–	–	VNaHJ 400	–
Radium	HRI-E	E40	4.60	Z 400..., Z 1000...	NaHJ 400	PZ 1000KD20	NaHJ 400PZT	–	–	VNaHJ 400	–
Radium	HRI-T	E40	4.60	Z 400..., Z 1000...	NaHJ 400	PZ 1000KD20	NaHJ 400PZT	–	–	VNaHJ 400	–
Radium	HRI-TS	Fc2	4.10	Z 400..., Z 1000...	NaHJ 400	PZ 1000KD20	NaHJ 400PZT	HZ 1000K	NaHJ 400	VNaHJ 400	–
Sylvania	HSI-HX	E40	3.40	–	–	PZI 1000/1	Q 400	–	–	–	–
Sylvania	HSI-T	E40	4.00	Z 400..., Z 1000...	NaHJ 400	PZ 1000KD20	NaHJ 400PZT	–	–	VNaHJ 400	–
Sylvania	HSI-THX	E40	3.40	–	–	PZI 1000/1	Q 400	–	–	–	–
Sylvania	HSI-TSX	E40	4.40	Z 400..., Z 1000...	NaHJ 400	PZ 1000KD20	NaHJ 400PZT	–	–	VNaHJ 400	–
Sylvania	HSI-SX	E40	4.40	Z 400..., Z 1000...	NaHJ 400	PZ 1000KD20	NaHJ 400PZT	–	–	VNaHJ 400	–
Venture	HIE	E40	3.20	Z 400..., Z 1000...	NaHJ 400	PZ 1000KD20	NaHJ 400PZT	–	–	VNaHJ 400	–
Venture	HIPE	E40	3.20	Z 400..., Z 1000...	NaHJ 400	PZ 1000KD20	NaHJ 400PZT	–	–	VNaHJ 400	–

Lamp Table for Discharge Lamps

Metal halide lamps (HI lamps)

Manufacturer	Designation	Base	Lamp current	Superimposed ignition system		Pulse ignition system		Instant restrike ignition system		Control gear unit	EB
				Ignitor	Ballast	Ignitor	Ballast	Ignitor	Ballast		
Lamp output 400 W											
Venture	HIT	E40	3.20	Z 400..., Z 1000...	NaHJ 400	PZ 1000KD20	NaHJ 400PZT	–	–	VNaHJ 400	–
Venture	HIT ...EURO	E40	3.20	–	–	PZI 1000/1	Q 400	–	–	–	–
Lamp output 600 W											
Osram	HQI-TM	G22	6.10	Z1000	NaH 600	PZ 1000KD20	NaH 600PZT	–	–	VNaH 600	–
Radium	HRI-TM	G22	6.10	Z1000	NaH 600	PZ 1000KD20	NaH 600PZT	–	–	VNaH 600	–
Lamp output 1000 W											
BLV	HIT	E40	9.50	Z 1000..., Z 2000	NaHJ 1000	PZ 1000KD20	–	–	–	–	–
GE	SPL 1000	E40	9.50	Z 1000..., Z 2000	NaHJ 1000	PZ 1000KD20	–	–	–	–	–
Narva	NC...	E40	8.25	Z 1000..., Z 2000	NaHJ 1000	PZ 1000KD20	–	–	–	–	–
Narva	NC...-P	E40	8.25	–	–	PZI 1000/1	Q 1000	–	–	–	–
Narva	NCT.../400V	E40	4.80	Z 1000/400V; Z 2000/400V	NaHJ 1000	–	–	–	–	–	–
Osram	HQI-TM	G22	9,50	Z 1000	NaHJ 1000	PZ 1000KD20					
Osram	HQI-E	E40	9.50	Z 1000..., Z 2000	NaHJ 1000	PZ 1000KD20	–	–	–	–	–
Osram	HQI-T	E40	9.50	Z 1000..., Z 2000	NaHJ 1000	PZ 1000KD20	–	–	–	–	–
Osram	HQI-TS	cables	9.60	Z 1000..., Z 2000	NaHJ 1000	PZ 1000KD20	–	HZ 1000K	NaHJ 1000	–	–
Philips	HPI-T	E40	8.25	–	–	PZI 1000/1	Q 1000	–	–	–	–
Philips	MHN-LA	cables	9.30	Z 1000..., Z 2000	NaHJ 1000	PZ 1000KD20	–	HZ 1000K	NaHJ 1000	–	–
Radium	HRI-T	E40	9.50	Z 1000..., Z 2000	NaHJ 1000	PZ 1000KD20	–	–	–	–	–
Radium	HRI-TM	G22	9.50	Z 1000	NaHJ 1000	PZ 1000KD20					
Radium	HRI-TS	cables	9.60	Z 1000..., Z 2000	NaHJ 1000	PZ 1000KD20	–	HZ 1000K	NaHJ 1000	–	–
Sylvania	HSI-THX	E40	8.25	–	–	PZI 1000/1	Q 1000	–	–	–	–
Venture	HIT	E40	9.15	Z 1000..., Z 2000	NaHJ1000	PZ 1000KD20	–	–	–	–	–
Venture	MBIL	RX7s	4.40	Z 2000/400V	–	–	–	HZ 2000K/ 400V	–	–	–
Lamp output 2000 W											
GE	SPL 2000/T	E40	10.30	Z 2000/400V	JD 2000	–	–	–	–	–	–
Osram	HQI-T/D	E40	10.30	Z 2000/400V	JD 2000	–	–	–	–	–	–
Osram	HQI-T...SN/3 80V	E40	8.80	–	–	-	QJ 2000	–	–	–	–
Osram	HQI-TS	cables	11.30	Z 2000/400V	JD 2000	–	–	HZ 2000K/ 400V	JD 2000	–	–
Osram	HQI-TS	cables	12.2	Z 2000/400V	JD 2000II/12.2	–	–	–	–	–	–
Philips	HPI-T 220V	E40	16.50	–	–	PZI 1000/1	JD 2000 I	–	–	–	–
Philips	HPI-T 380V	E40	9.10	–		-	QJ 2000	–	–	–	–
Philips	MHN-LA	cables	9.6–10.3	Z 2000/400V	JD 2000	–	–	HZ 2000K/ 400V	JD 2000	–	–
Philips	MHN-SA	X830R	11.30	Z 2000/400V	JD 2000	–	–	HZ 2000K/ 400V	JD 2000	–	–
Philips	MHN-SB 400V	cables	11.30	Z 2000/400V	JD 2000	–	–	–	–	–	–
Radium	HRI-T 230V	E40	16.50 (2x8.25)	–	–	PZI 1000/1	JD 2000 I	–	–	–	–
Radium	HRI-T/D	E40	10.30	Z 2000/400V	JD 2000						
Radium	HRI-TS	E40	10.30	Z 2000/400V	JD 2000	–	–	–	–	–	–
Radium	HRI-TS	cables	11.30	Z 2000/400V	JD 2000	–	–	HZ 2000K/ 400V*	JD 2000	–	–
Sylvania	HSI-T	E40	9.00	Z 2000/400V	JD 2000	–	–	–	–	–	–
Sylvania	HSI-TD	cables	11.30	Z 2000/400V	JD 2000	–	–	HZ 2000K/ 400V	JD 2000	–	–
Venture	MH	cables	10.30	Z 2000	JD 2000	–	–	–	–	–	–
Venture	MBIL	RX7s	10.30	Z 2000	JD 2000	–	–	–	–	–	–
Lamp output 3500 W											
Radium	HRI-T	E40	18.00	Z 3500/400V	JD 3500	–	–	–	–	–	–
Radium	HRI-TS	cables	18.00	Z 3500/400V	JD 3500	–	–	–	–	–	–

* Not suitable HRI-TS 2000W/N/L; HQI-TS 2000W/N/L

Lamp Table for Discharge Lamps

Ceramic discharge tube lamps (C-HI)

Manufacturer	Designation	Base	Lamp current	Superimposed ignition system Ignitor*	Ballast	Pulse ignition system Ignitor	Ballast	Instant restrike ignition system Ignitor	Ballast	Control gear unit	EB
Lamp output 20 W											
GE	CMH20MR16	GX10	0.21	–	–	–	–	–	–	–	EHXc 20
GE	CMH20PAR	E27	0.23	–	–	–	–	–	–	–	EHXc 20
GE	CMH20T	G12	0.23	–	–	–	–	–	–	–	EHXc 20
GE	CMH20T	GU6.5	0.21	–	–	–	–	–	–	–	EHXc 20
GE	CMH20TC	G8.5	0.23	–	–	–	–	–	–	–	EHXc 20
GE	CMH20TC	G12	0.23	–	–	–	–	–	–	–	EHXc 20
Osram	HCI-PAR	E27	0.22	–	–	–	–	–	–	–	EHXc 20
Osram	HCI-R111	GX8.5	0.22	–	–	–	–	–	–	–	EHXc 20
Osram	HCI-TF	GU6.5	0.22	–	–	–	–	–	–	–	EHXc 20G.329
Osram	HCI-TC	G8.5	0.22	–	–	–	–	–	–	–	EHXc 20G.329
Philips	CDM-TM	PGJ5	0.22	–	–	–	–	–	–	–	–
Philips	CDM-R	GX10	0.22	–	–	–	–	–	–	–	EHXc 20G.329
Radium	RCC-TC	G8.5	0.22	–	–	–	–	–	–	–	EHXc 20G.329
Lamp output 35 W											
BLV	C-HIT	G12	0.50	Z 250..., Z 400...	NaHJ 35	PZ 1000KD20	NaHJ 35PZT	–	–	VNaHJ 35	EHXc 35
GE	CMH35PAR	E27	0.50	Z 250..., Z 400...	NaHJ 35	PZ 1000KD20	NaHJ 35PZT	–	–	VNaHJ 35	EHXc 35
GE	CMH35T	G12	0.50	Z 250..., Z 400...	NaHJ 35	PZ 1000KD20	NaHJ 35PZT	–	–	VNaHJ 35	EHXc 35
GE	CMH35TC	G8.5	0.50	Z 250..., Z 400...	NaHJ 35	PZ 1000KD20	NaHJ 35PZT	–	–	VNaHJ 35	EHXc 35
Osram	HCI-E/P	E27	0.50	Z 250..., Z 400...	NaHJ 35	PZ 1000KD20	NaHJ 35PZT	–	–	VNaHJ 35	EHXc 35
Osram	HCI-PAR	E27	0.50	Z 250..., Z 400...	NaHJ 35	PZ 1000KD20	NaHJ 35PZT	–	–	VNaHJ 35	EHXc 35
Osram	HCI-R111	GX8.5	0.50	Z 250..., Z 400...	NaHJ 35	PZ 1000KD20	NaHJ 35PZT	–	–	VNaHJ 35	EHXc 35
Osram	HCI-T	G12	0.50	Z 250..., Z 400...	NaHJ 35	PZ 1000KD20	NaHJ 35PZT	–	–	VNaHJ 35	EHXc 35
Osram	HCI-TC	G8.5	0.50	Z 250..., Z 400...	NaHJ 35	PZ 1000KD20	NaHJ 35PZT	–	–	VNaHJ 35	EHXc 35
Osram	HCI-TF	GU6.5	0.50	Z 250..., Z 400...	NaHJ 35	PZ 1000KD20	NaHJ 35PZT	–	–	VNaHJ 35	EHXc 35
Panasonic	CPS 35 W	GU8.5	0.44	–	–	–	–	–	–	–	EHXc 35
Philips	CDM-R	E27	0.53	Z 250..., Z 400...	NaHJ 35	PZ 1000KD20	NaHJ 35PZT	–	–	VNaHJ 35	EHXc 35
Philips	CDM-R111	GX8.5	0.53	Z 250..., Z 400...	NaHJ 35	PZ 1000KD20	NaHJ 35PZT	–	–	VNaHJ 35	EHXc 35
Philips	CDM-T	G12	0.53	Z 250..., Z 400...	NaHJ 35	PZ 1000KD20	NaHJ 35PZT	–	–	VNaHJ 35	EHXc 35
Philips	CDM-TC	G8.5	0.53	Z 250..., Z 400...	NaHJ 35	PZ 1000KD20	NaHJ 35PZT	–	–	VNaHJ 35	EHXc 35
Philips	CDM-R	GX10	0,53	Z 250..., Z 400...	NaHJ 35	PZ 1000KD20	NaHJ 35PZT	–	–	–	EHXc 35G
Radium	RCC-PAR	E27	0.50	Z 250..., Z 400...	NaHJ 35	PZ 1000KD20	NaHJ 35PZT	–	–	VNaHJ 35	EHXc 35
Radium	RCC-T	G12	0.50	Z 250..., Z 400...	NaHJ 35	PZ 1000KD20	NaHJ 35PZT	–	–	VNaHJ 35	EHXc 35
Radium	RCC-TC	G8.5	0.50	Z 250..., Z 400...	NaHJ 35	PZ 1000KD20	NaHJ 35PZT	–	–	VNaHJ 35	EHXc 35
Sylvania	CMI-T	G12	0.53	Z 250..., Z 400...	NaHJ 35	PZ 1000KD20	NaHJ 35PZT	–	–	VNaHJ 35	EHXc 35
Sylvania	CMI-TC	G8.5	0.53	Z 250..., Z 400...	NaHJ 35	PZ 1000KD20	NaHJ 35PZT	–	–	VNaHJ 35	EHXc 35
Venture	CMH35/T	G12	0.50	Z 250..., Z 400...	NaHJ 35	PZ 1000KD20	NaHJ 35PZT	–	–	VNaHJ 35	EHXc 35
Venture	CMH35/TC	G8.5	0.50	Z 250..., Z 400...	NaHJ 35	PZ 1000KD20	NaHJ 35PZT	–	–	VNaHJ 35	EHXc 35
Lamp output 50 W											
Philips	CDM-TC Elite	G8.5	0,59	Z 70...	NaH 50	–	–	–	–	VNaH 50	EHXc 50
Philips	CDM-T Elite	G12	0,57	Z 70...	NaH 50	–	–	–	–	VNaH 50	EHXc 50
Lamp output 70 W											
BLV	C-HIT	G12	0.98	Z 250..., Z 400...	NaHJ 70	PZ 1000KD20	NaHJ 70PZT	–	–	VNaHJ 70	EHXc 70
BLV	C-HIT-DE	RX7s	0.90	Z 250..., Z 400...	NaHJ 70	PZ 1000KD20	NaHJ 70PZT	–	–	VNaHJ 70	EHXc 70
GE	CMH70E	E27	0.98	Z 250..., Z 400...	NaHJ 70	PZ 1000KD20	NaHJ 70PZT	–	–	VNaHJ 70	EHXc 70
GE	CMH70PAR	E27	0.98	Z 250..., Z 400...	NaHJ 70	PZ 1000KD20	NaHJ 70PZT	–	–	VNaHJ 70	EHXc 70
GE	CMH70T	G12	0.98	Z 250..., Z 400...	NaHJ 70	PZ 1000KD20	NaHJ 70PZT	–	–	VNaHJ 70	EHXc 70
GE	CMH70TC	G8.5	0.98	Z 250..., Z 400...	NaHJ 70	PZ 1000KD20	NaHJ 70PZT	–	–	VNaHJ 70	EHXc 70
GE	CMH70TD	Rx7s	0.98	Z 250..., Z 400...	NaHJ 70	PZ 1000KD20	NaHJ 70PZT	–	–	VNaHJ 70	EHXc 70
GE	CMH70TT	E27	0.98	Z 70...	NaHJ 70	PZ 1000KD20	NaHJ 70PZT	–	–	VNaHJ 70	EHXc 70
Osram	HCI-E/P	E27	0.98	Z 250..., Z 400...	NaHJ 70	PZ 1000KD20	NaHJ 70PZT	–	–	VNaHJ 70	EHXc 70
Osram	HCI-PAR	E27	0.97	Z 250..., Z 400...	NaHJ 70	PZ 1000KD20	NaHJ 70PZT	–	–	VNaHJ 70	EHXc 70
Osram	HCI-R111	GX8.5	0.98	Z 250..., Z 400...	NaHJ 70	PZ 1000KD20	NaHJ 70PZT	–	–	VNaHJ 70	EHXc 70
Osram	HCI-T	G12	0.96	Z 250..., Z 400...	NaHJ 70	PZ 1000KD20	NaHJ 70PZT	–	–	VNaHJ 70	EHXc 70
Osram	HCI-T/P	E27	0.98	Z 250..., Z 400...	NaHJ 70	PZ 1000KD20	NaHJ 70PZT	–	–	VNaHJ 70	EHXc 70
Osram	HCI-TC	G8.5	0.96	Z 250..., Z 400...	NaHJ 70	PZ 1000KD20	NaHJ 70PZT	–	–	VNaHJ 70	EHXc 70
Osram	HCI-TS	RX7s	0.95	Z 250..., Z 400...	NaHJ 70	PZ 1000KD20	NaHJ 70PZT	HZ 600K	NaHJ 70	VNaHJ 70	EHXc 70
Osram	HCI-TT	E27	0.92	Z 70...	NaHJ 70	PZ 1000KD20	NaHJ 70PZT	–	–	VNaHJ 70	EHXc 70
Panasonic	CPS 70 W	GU8.5	0.86	–	–	–	–	–	–	–	EHXc 70
Philips	CDO-ET	E27	0.98	Z 70...	NaHJ 70	PZ 1000KD20	NaHJ 70PZT	–	–	VNaHJ 70	EHXc 70
Philips	CDO-TT	E27	1.00	Z 70...	NaHJ 70	PZ 1000KD20	NaHJ 70PZT	–	–	VNaHJ 70	EHXc 70

Lamp Table for Discharge Lamps

Ceramic discharge tube lamps (C-HI)

Manufacturer	Designation	Base	Lamp current	Superimposed ignition system		Pulse ignition system		Instant restrike ignition system		Control gear unit	EB
				Ignitor*	Ballast	Ignitor	Ballast	Ignitor	Ballast		
Lamp output 70 W											
Philips	CDM-R	E27	0.97	Z 250..., Z 400...	NaHJ 70	PZ 1000KD20	NaHJ 70PZT	–	–	VNaHJ 70	EHXc 70
Philips	CDM-R111	GX8.5	0.97	Z 250..., Z 400...	NaHJ 70	PZ 1000KD20	NaHJ 70PZT	–	–	VNaHJ 70	EHXc 70
Philips	CDM-T	G12	0.98	Z 250..., Z 400...	NaHJ 70	PZ 1000KD20	NaHJ 70PZT	–	–	VNaHJ 70	EHXc 70
Philips	CDM-TC	G8.5	0.98	Z 250..., Z 400...	NaHJ 70	PZ 1000KD20	NaHJ 70PZT	–	–	VNaHJ 70	EHXc 70
Philips	CDM-TD	RX7s	0.97	Z 250..., Z 400...	NaHJ 70	PZ 1000KD20	NaHJ 70PZT	HZ 600K	NaHJ 70	VNaHJ 70	EHXc 70
Philips	CDM-TP	PG12-2	0.98	Z 250..., Z 400...	NaHJ 70	PZ 1000KD20	NaHJ 70PZT	–	–	VNaHJ 70	–
Radium	RCC-PAR	E27	0.98	Z 250..., Z 400...	NaHJ 70	PZ 1000KD20	NaHJ 70PZT	–	–	VNaHJ 70	EHXc 70
Radium	RCC-T	G12	0.96	Z 250..., Z 400...	NaHJ 70	PZ 1000KD20	NaHJ 70PZT	–	–	VNaHJ 70	EHXc 70
Radium	RCC-TC	G8.5	0.96	Z 250..., Z 400...	NaHJ 70	PZ 1000KD20	NaHJ 70PZT	–	–	VNaHJ 70	EHXc 70
Radium	RCC-TS	RX7s	0.98	Z 250..., Z 400...	NaHJ 70	PZ 1000KD20	NaHJ 70PZT	HZ 600K	NaHJ 70	VNaHJ 70	EHXc 70
Sylvania	CMI-T	G12	0.98	Z 250..., Z 400...	NaHJ 70	PZ 1000KD20	NaHJ 70PZT	–	–	VNaHJ 70	EHXc 70
Sylvania	CMI-TC	G8.5	0.98	Z 250..., Z 400...	NaHJ 70	PZ 1000KD20	NaHJ 70PZT	–	–	VNaHJ 70	EHXc 70
Sylvania	CMI-TD	RX7s	0.98	Z 250..., Z 400...	NaHJ 70	PZ 1000KD20	NaHJ 70PZT	–	–	VNaHJ 70	EHXc 70
Venture	CMH70/T	G12	0.98	Z 250..., Z 400...	NaHJ 70	PZ 1000KD20	NaHJ 70PZT	–	–	VNaHJ 70	EHXc 70
Venture	CMH70/TC	G8.5	0.98	Z 250..., Z 400...	NaHJ 70	PZ 1000KD20	NaHJ 70PZT	–	–	VNaHJ 70	EHXc 70
Venture	CMH70/TD	RX7s	0.98	Z 250..., Z 400...	NaHJ 70	PZ 1000KD20	NaHJ 70PZT	–	–	VNaHJ 70	EHXc 70
Venture	CMH70/TT	E27	0.98	Z 70...	NaHJ 70	PZ 1000KD20	NaHJ 70PZT	–	–	VNaHJ 70	EHXc 70
Lamp output 100 W											
GE	CMH100PAR	E26	1.10	Z 250..., Z 400...	NaHJ 100	PZ 1000KD20	NaHJ 100PZT	–	–	VNaHJ 100	–
GE	LUCALOX XO	E40	1.11	Z 250..., Z 400...	NaHJ 100	PZ 1000KD20	NaHJ 100PZT	–	–	VNaHJ 100	EHXc 100
Osram	HCI-E/P	E27	1.20	Z 250..., Z 400...	NaHJ 100	PZ 1000KD20	NaHJ 100PZT	–	–	VNaHJ 100	–
Osram	HCI-T/P	E27	1.20	Z 250..., Z 400...	NaHJ 100	PZ 1000KD20	NaHJ 100PZT	–	–	VNaHJ 100	–
Osram	HCI-T	G12	1.10	Z 250..., Z 400...	NaHJ 100	PZ 1000KD20	NaHJ 100PZT	–	–	VNaHJ 100	EHXc 100
Philips	CDO-ET	E40	1.20	Z 250..., Z 400...	NaHJ 100	PZ 1000KD20	NaHJ 100PZT	–	–	VNaHJ 100	–
Philips	CDO-TT	E40	1.20	Z 250..., Z 400...	NaHJ 100	PZ 1000KD20	NaHJ 100PZT	–	–	VNaHJ 100	–
Philips	CDM-T Elite	G12	1.14	Z 250..., Z 400...	NaHJ 100	PZ 1000KD20	NaHJ 100PZT	–	–	VNaHJ 100	EHXc 100
Lamp output 150 W											
BLV	C-HIT	G12	1.85	Z 250..., Z 400...	NaHJ 150	PZ 1000KD20	NaHJ 150PZT	–	–	VNaHJ 150	EHXc 150
BLV	C-HIT-DE	RX7s-24	1.80	Z 250..., Z 400...	NaHJ 150	PZ 1000KD20	NaHJ 150PZT	–	–	VNaHJ 150	–
GE	CMH150T	G12	1.85	Z 250..., Z 400...	NaHJ 150	PZ 1000KD20	NaHJ 150PZT	–	–	VNaHJ 150	EHXc 150
GE	CMH150TD	RX7s	1.80	Z 250..., Z 400...	NaHJ 150	PZ 1000KD20	NaHJ 150PZT	–	–	VNaHJ 150	EHXc 150
Osram	HCI-E/P	E27	1.80	Z 250..., Z 400...	NaHJ 150	PZ 1000KD20	NaHJ 150PZT	–	–	VNaHJ 150	EHXc 150
Osram	HCI-T	G12	1.80	Z 250..., Z 400...	NaHJ 150	PZ 1000KD20	NaHJ 150PZT	–	–	VNaHJ 150	EHXc 150
Osram	HCI-T/P	E27	1.80	Z 250..., Z 400...	NaHJ 150	PZ 1000KD20	NaHJ 150PZT	–	–	VNaHJ 150	EHXc 150
Osram	HCI-TS	RX7s-24	1.80	Z 250..., Z 400...	NaHJ 150	PZ 1000KD20	NaHJ 150PZT	HZ 1000K	NaHJ 150	VNaHJ 150	–
Osram	HCI-TT	E40	1.80	Z 250..., Z 400...	NaHJ 150	PZ 1000KD20	NaHJ 150PZT	–	–	VNaHJ 150	EHXc 150
Philips	CDO-ET	E40	1.80	Z 250..., Z 400...	NaHJ 150	PZ 1000KD20	NaHJ 150PZT	–	–	VNaHJ 150	EHXc 150
Philips	CDO-TT	E40	1.80	Z 250..., Z 400...	NaHJ 150	PZ 1000KD20	NaHJ 150PZT	–	–	VNaHJ 150	EHXc 150
Philips	CDM-T	G12	1.80–1.90	Z 250..., Z 400...	NaHJ 150	PZ 1000KD20	NaHJ 150PZT	–	–	VNaHJ 150	EHXc 150
Philips	CDM-TD	RX7s	1.80	Z 250..., Z 400...	NaHJ 150	PZ 1000KD20	NaHJ 150PZT	HZ 1000K	NaHJ 150	VNaHJ 150	EHXc 150
Philips	CDM-TP	PGX12-2	1.80	Z 250..., Z 400...	NaHJ 150	PZ 1000KD20	NaHJ 150PZT	–	–	VNaHJ 150	EHXc 150
Radium	RCC-T	G12	1.80	Z 250..., Z 400...	NaHJ 150	PZ 1000KD20	NaHJ 150PZT	HZ 1000K	NaHJ 150	VNaHJ 150	EHXc 150
Radium	RCC-TS	RX7s	1.80	Z 250..., Z 400...	NaHJ 150	PZ 1000KD20	NaHJ 150PZT	–	–	VNaHJ 150	EHXc 150
Sylvania	CMI-T	G12	1.82	Z 250..., Z 400...	NaHJ 150	PZ 1000KD20	NaHJ 150PZT	–	–	VNaHJ 150	EHXc 150
Sylvania	CMI-TD	RX7s-24	1.82	Z 250..., Z 400...	NaHJ 150	PZ 1000KD20	NaHJ 150PZT	–	–	VNaHJ 150	–
Venture	CMH150/T	G12	1.85	Z 250..., Z 400...	NaHJ 150	PZ 1000KD20	NaHJ 150PZT	–	–	VNaHJ 150	EHXc 150
Venture	CMH150/TD	RX7s	1.80	Z 250..., Z 400...	NaHJ 150	PZ 1000KD20	NaHJ 150PZT	–	–	VNaHJ 150	EHXc 150
Lamp output 250 W											
GE	CMH250E	E40	2.70	Z 250..., Z 400...	NaHJ 250	PZ 1000KD20	NaHJ 250PZT	–	–	VNaHJ 250	–
GE	CMH250P	E40	2.70	Z 250..., Z 400...	NaHJ 250	PZ 1000KD20	NaHJ 250PZT	–	–	VNaHJ 250	–
GE	CMH-TT	E40	2.90	Z 250..., Z 400...	NaHJ 250	PZ 1000KD20	NaHJ 250PZT	–	–	VNaHJ 250	–
Osram	HCI-E	E40	2.90	Z 250..., Z 400...	NaHJ 250	PZ 1000KD20	NaHJ 250PZT	–	–	VNaHJ 250	–
Osram	HCI-TC	E40	2.90	Z 250..., Z 400...	NaHJ 250	PZ 1000KD20	NaHJ 250PZT	–	–	VNaHJ 250	–
Osram	HCI-TM	G22	2.90	Z 250..., Z 400...	NaHJ 250	PZ 1000KD20	NaHJ 250PZT	HZ 1000K	NaHJ 250	VNaHJ 250	–
Osram	HCI-TS	E40; Fc2	3.00	Z 250..., Z 400...	NaHJ 250	PZ 1000KD20	NaHJ 250PZT	HZ 1000K	NaHJ 250	VNaHJ 250	–
Philips	CDO-TT	E40	3.00	Z 250..., Z 400...	NaHJ 250	PZ 1000KD20	NaHJ 250PZT	–	–	VNaHJ 250	–
Philips	CDM-T	G12	3.00	Z 250..., Z 400...	NaHJ 250	PZ 1000KD20	NaHJ 250PZT	–	–	VNaHJ 250	–
Radium	RCC-E	E40	2.90	Z 250..., Z 400...	NaHJ 250	PZ 1000KD20	NaHJ 250PZT	–	–	VNaHJ 250	–
Radium	RCC-T	E40	2.80	Z 250..., Z 400...	NaHJ 250	PZ 1000KD20	NaHJ 250PZT	–	–	VNaHJ 250	–

Lamp Table for Discharge Lamps

Ceramic discharge tube lamps (C-HI)

Manufacturer	Designation	Base	Lamp current	Superimposed ignition system		Pulse ignition system		Instant restrike ignition system		Control gear unit	EB
				Ignitor*	Ballast	Ignitor	Ballast	Ignitor	Ballast		
Lamp output 250 W											
Radium	RCC-TM	G22	2.90	Z 250..., Z 400...	NaHJ 250	PZ 1000KD20	NaHJ 250PZT	HZ 1000K	NaHJ 250	VNaHJ 250	–
Radium	RCC-TS	Fc2	3.00	Z 250..., Z 400...	NaHJ 250	PZ 1000KD20	NaHJ 250PZT	HZ 1000K	NaHJ 250	VNaHJ 250	–
Lamp output 400 W											
GE	CMHTT	E40	4.60	Z 400M..., Z 400...	NaHJ 400	PZ 1000KD20	NaHJ 400PZT	–	–	VNaHJ 400	–
Osram	HCI-TM	G22	4.45	Z 400M..., Z 400...	NaHJ 400	PZ 1000KD20	NaHJ 400PZT	–	–	VNaHJ 400	–

* Z 400 M VS power ignitor is not suitable for C-HI lamps

Lamp Table for Discharge Lamps

Mercury vapour lamps (HM lamps)

Manufacturer	Designation	Base	Current	Operating devices Ballasts (ignitor not required)	Capacitor at 50 Hz
Lamp output 50 W					
GE	H 50	E27, B22d	0.62	Q 50, Q 80/50	7 µF
Iwasaki	HF 50 PD	E27	0.62	Q 50, Q 80/50	7 µF
Narva	NF 50	E27	0.62	Q 50, Q 80/50	7 µF
Osram	HQL 50	E27	0.62	Q 50, Q 80/50	7 µF
Philips	HPL 50	E27	0.62	Q 50, Q 80/50	7 µF
Radium	HRL 50	E27	0.62	Q 50, Q 80/50	7 µF
Sylvania	HSL 50	E27	0.62	Q 50, Q 80/50	7 µF
Lamp output 80 W					
GE	H 80	E27, B22d-3*	0.80	Q 80, Q 80/50, Q 125/80	8 µF
Iwasaki	HF 80 PD	E27	0.80	Q 80, Q 80/50, Q 125/80	8 µF
Narva	NF 80	E27	0.80	Q 80, Q 80/50, Q 125/80	8 µF
Osram	HQL 80	E27	0.80	Q 80, Q 80/50, Q 125/80	8 µF
Philips	HPL 80	E27	0.80	Q 80, Q 80/50, Q 125/80	8 µF
Radium	HRL 80	E27	0.80	Q 80, Q 80/50, Q 125/80	8 µF
Sylvania	HSL 80	E27	0.80	Q 80, Q 80/50, Q 125/80	8 µF
Lamp output 125 W					
GE	H 125	E27, B22d-3*	1.15	Q 125, Q 125/80	10 µF
Iwasaki	HF 125 PD	E27	1.15	Q 125, Q 125/80	10 µF
Narva	NF 125	E27	1.15	Q 125, Q 125/80	10 µF
Osram	HQL 125	E27, E40	1.15	Q 125, Q 125/80	10 µF
Philips	HPL 125	E27	1.15	Q 125, Q 125/80	10 µF
Radium	HRL 125	E27	1.15	Q 125, Q 125/80	10 µF
Sylvania	HSL 125	E27, B22d-3*	1.15	Q 125, Q 125/80	10 µF
Lamp output 250 W					
GE	H 250	E40	2.15	Q 250, U-Q 250/150	18 µF
Iwasaki	HF 250 PD	E40	2.15	Q 250, U-Q 250/150	18 µF
Narva	NF 250	E40	2.15	Q 250, U-Q 250/150	18 µF
Osram	HQL 250	E40	2.15	Q 250, U-Q 250/150	18 µF
Philips	HPL 250	E40	2.15	Q 250, U-Q 250/150	18 µF
Radium	HRL 250	E40	2.15	Q 250, U-Q 250/150	18 µF
Sylvania	HSL 250	E40	2.15	Q 250, U-Q 250/150	18 µF
Lamp output 400 W					
GE	H 400	E40	3.25	Q 400, U-Q 400/250	25 µF
Iwasaki	HF 400 PD	E40	3.25	Q 400, U-Q 400/250	25 µF
Narva	NF 400	E40	3.25	Q 400, U-Q 400/250	25 µF
Osram	HQL 400	E40	3.25	Q 400, U-Q 400/250	25 µF
Philips	HPL 400	E40	3.25	Q 400, U-Q 400/250	25 µF
Radium	HRL 400	E40	3.25	Q 400, U-Q 400/250	25 µF
Sylvania	HSL 400	E40	3.25	Q 400, U-Q 400/250	25 µF
Lamp output 700 W					
GE	H 700	E40	5.45	Q 700	40 µF
Iwasaki	HF 700 PD	E40	5.40	Q 700	40 µF
Narva	NF 700	E40	5.40	Q 700	40 µF
Osram	HQL 700	E40	5.40	Q 700	40 µF
Philips	HPL 700	E40	5.40	Q 700	40 µF
Radium	HRL 700	E40	5.40	Q 700	40 µF
Sylvania	HSL 700	E40	5.40	Q 700	40 µF
Lamp output 1000 W					
GE	H 1000	E40	7.50	Q 1000	60 µF
Iwasaki	HF 1000 PD	E40	7.50	Q 1000	60 µF
Narva	NF 1000	E40	7.50	Q 1000	60 µF
Osram	HQL 1000	E40	7.50	Q 1000	60 µF
Philips	HPL 1000	E40	7.50	Q 1000	60 µF
Radium	HRL 1000	E40	7.50	Q 1000	60 µF
Sylvania	HSL 1000	E40	7.50	Q 1000	60 µF

* The VS range does not include a lampholder for base B22d-3

Energy efficiency classification

The commission's regulation (EC) No. 245/2009 dated 18 March 2009 implementing Directive 2005/32/EC of the European Parliament and of the Council with regard to defining ecodesign requirements for fluorescent lamps without integrated ballast, high-pressure discharge lamps and for ballasts and luminaires needed for their operation, and repealing Directive 2000/55/EC of the European Parliament and of the Council (official title), has created a legal framework in the EU that defines fundamental requirements for operating efficient lighting technology products.

Although the Regulation predominantly applies to general lighting, it is also product-orientated and thus independent of any specific application. The efficiency and performance requirements (specifications governing performance features) apply to fluorescent lamps without integrated ballast, high-pressure discharge lamps as well as ballasts and luminaires needed to operate these lamps. A brief overview of the requirements governing high-pressure discharge lamps is provided in the following table (excerpt from the CELMA guide).

Stage	**Requirements governing**	
1 13.04.2010	Ballasts	• No special requirements
Interim Stage 13.09.2010	Luminaires	• After 18 months: technical information must be made available, both online and in luminaire documentation (for luminaires > 2,000 Lumens)
2 13.04.2012	Ballasts	• Introduction of minimum energy-efficiency index values for HID ballasts and their labelling: P < 30 W – $\eta \geq 65\%$ 30 < P < 75 W – $\eta \geq 75\%$ 75 < P < 105 W – $\eta \geq 80\%$ 105 < P < 405 W – $\eta \geq 85\%$ P > 405 W – $\eta \geq 90\%$ • HID ballasts to be labelled: EEI=A3
	Luminaires	• Luminaire designs must permit the integration of 3rd-stage ballasts. Exception: luminaires > IP4X
at the latest by **13.04.2014**	**Revision of the regulation** Technological progress as well as the sum of the experience gained during the implementation of the Regulatio be taken into oconsideration during the revision process.	
3 13.04.2017	Ballasts	• Minimum energy-efficiency index values will be raised: P < 30 W – $\eta \geq 78\%$ 30 < P < 75 W – $\eta \geq 85\%$ 75 < P < 105 W – $\eta \geq 87\%$ 105 < P < 405 W – $\eta \geq 90\%$ P > 405 W – $\eta \geq 92\%$ • HID ballasts to be labelled: A2
	Luminaires	• All luminaire designs must permit the integration of 3rd-stage ballasts.

WARM START, DIMMABLE AND INSTANT START





ELECTRONIC BALLASTS

Operating fluorescent lamps with electronic ballasts yields numerous advantages with regard to efficiency and convenience. Further details are provided on the respective product pages and the technical appendix.

The brightness of fluorescent lamps can also be regulated with the help of dimmable electronic ballasts. Adjusting lamp wattage leads to a further reduction of energy consumption and of the associated costs. The corresponding ELXd units from Vossloh-Schwabe enable conventional 1–10 V control units to be connected via a bipolar 1–10 V dimmer interface.

Moreover, Vossloh-Schwabe's product range also contains electronic ballasts that can be dimmed using conventional light sensors or polarity-independent dimmer interfaces via DALI-compatible control units. Both interfaces (1–10 V and DALI) were developed in accordance with EN 60929. Under consideration of the maximum current of the respective control unit, it is also possible to operate several electronic ballasts in parallel.

4 Electronic Ballasts for TC and T Lamps

Electronic ballasts for compact fluorescent lamps **228–244**
ELXs – Warm start 228
ELXc – Warm start – Linear casing shape 229
ELXd – Dimmable – Linear casing shape 230–231
ELXc – Warm start – Compact casing shape 232–239
ELXd – Dimmable – Compact casing shape 240–244

Electronic ballasts for tubular fluorescent lamps **245–255**
ELXs – Warm start 245
ELXc – Warm start – Linear casing shape 246–249
ELXc EffectLine – Warm start 250–251
ELXd – Dimmable – Linear casing shape 252–254
ELXe – Instant start – Linear casing shape 255

Accessories for dimmable electronic built-in ballasts **256**

Technical details for fluorescent lamps **350–379**
General technical details 533–540
Glossary 541–543

ELXs – Warm Start for Compact Fluorescent Lamps

Electronic built-in ballasts
Casing: heat-resistant polyamide
Power factor: approx. 0.6
(depending on the lamp output)
DC voltage operation: 198–264 V
Push-in terminals with push-button: 0.5–1.5 mm²
RFI-suppressed
For luminaires of protection class I and II
Degree of protection: IP20
Fixing slots for screws M4
For lighting systems with
high switching frequency (> 5/day)
EOL shut down approved
acc. to EN 61347 Test 2

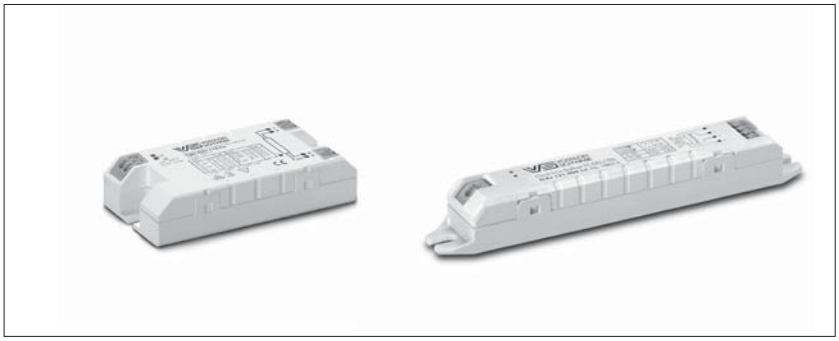

K20

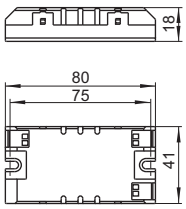

K21

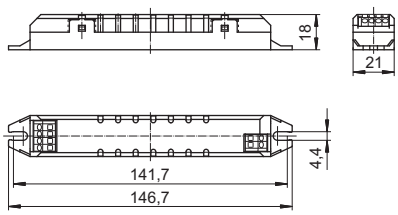

(●) T5 (●) TC (●) BUILT-IN (○) 1–10 V
(○) T8 (○) INDEPENDENT (○) DALI/PUSH

Lamp				Electronic ballast							System
Output W	Type	Base	Power consumption W	Type	**Ref. No.**	Voltage AC 50, 60 Hz V±10%	Energy efficiency	Ambient temperature t_a (°C)	Casing temperature t_c (°C)	Casing	Output W
5	TC-SEL	2G7	1 x 5.0	ELXs 116.900	**188661**	220–240	A3	–15 to 55	max. 75	K20	6.1
				ELXs 116.903	**188662**	220–240	A3	–15 to 55	max. 75	K21	6.1
7	TC-SEL	2G7	1 x 6.4	ELXs 116.900	**188661**	220–240	A2	–15 to 55	max. 75	K20	7.5
				ELXs 116.903	**188662**	220–240	A2	–15 to 55	max. 75	K21	7.5
9	TC-SEL	2G7	1 x 8.0	ELXs 116.900	**188661**	220–240	A2	–15 to 55	max. 75	K20	8.8
				ELXs 116.903	**188662**	220–240	A2	–15 to 55	max. 75	K21	8.8
10	TC-DEL	G24q-1	1 x 9.3	ELXs 116.900	**188661**	220–240	A2	–15 to 55	max. 75	K20	10.2
	TC-DD	GR10q	1 x 9.3	ELXs 116.900	**188661**	220–240	A2	–15 to 55	max. 75	K20	10.3
	TC-DEL	G24q-1	1 x 9.3	ELXs 116.903	**188662**	220–240	A2	–15 to 55	max. 75	K21	10.2
	TC-DD	GR10q	1 x 9.3	ELXs 116.903	**188662**	220–240	A2	–15 to 55	max. 75	K21	10.3
11	TC-SEL	2G7	1 x 10.8	ELXs 116.900	**188661**	220–240	A2	–15 to 55	max. 75	K20	11.8
				ELXs 116.903	**188662**	220–240	A2	–15 to 55	max. 75	K21	11.8
13	TC-DEL/-TEL	G24q-1/GX24q-1	1 x 12.5	ELXs 121.901	**188663**	220–240	A2	–15 to 55	max. 80	K20	15.5
				ELXs 121.904	**188664**	220–240	A2	–15 to 55	max. 80	K21	15.5
16	TC-DD	GR10q	1 x 13.2	ELXs 116.900	**188661**	220–240	A3	–15 to 55	max. 75	K20	15.1
				ELXs 116.903	**188662**	220–240	A3	–15 to 55	max. 75	K21	15.1
18	TC-DEL/-TEL	G24q-2/GX24q-2	1 x 15.3	ELXs 121.901	**188663**	220–240	A2	–15 to 55	max. 80	K20	16.9
				ELXs 121.904	**188664**	220–240	A2	–15 to 55	max. 80	K21	16.9
	TC-F/-L	2G10/2G11	1 x 16.0	ELXs 124.902	**188665**	220–240	A2	–15 to 55	max. 85	K20	17.9
				ELXs 124.905	**188666**	220–240	A2	–15 to 55	max. 85	K21	17.9
22	T-R5	2GX13	1 x 19.1	ELXs 124.902	**188665**	220–240	A2	–15 to 55	max. 85	K20	21.2
				ELXs 124.905	**188666**	220–240	A2	–15 to 55	max. 85	K21	21.2
24	TC-F/-L	2G10/2G11	1 x 20.0	ELXs 124.902	**188665**	220–240	A2	–15 to 55	max. 85	K20	21.4
				ELXs 124.905	**188666**	220–240	A2	–15 to 55	max. 85	K21	21.4
			1 x 20.8	ELXs 126.906	**188667**	220–240	A2	–15 to 55	max. 85	K20	22.9
				ELXs 126.907	**188668**	220–240	A2	–15 to 55	max. 85	K21	22.9
26	TC-DEL/-TEL	G24q-3/GX24q-3	1 x 21.5	ELXs 126.906	**188667**	220–240	A2	–15 to 55	max. 85	K20	23.4
				ELXs 126.907	**188668**	220–240	A2	–15 to 55	max. 85	K21	23.4

Circuit diagrams see pages 362–365

ELXc – Warm Start for TC-F, TC-L Lamps

Electronic built-in ballasts
Casing: metal
Power factor: > 0.96
DC voltage
for operation: 176–264 V
for ignition: 198–264 V
(ELXc 180.866, 280.538: DC voltage cannot be reduced to 176 V)
Push-in terminals: 0.5–1 mm²
For the automatic luminaire wiring:
IDC terminals for leads H05V-U 0.5
RFI-suppressed
For luminaires of protection class I
Degree of protection: IP20
For lighting systems with
high switching frequency (> 5/day)
EOL shut down approved acc. to EN 61347 Test 2

M10/M11

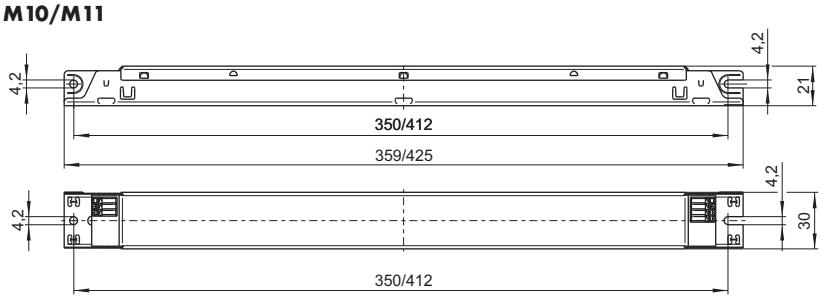

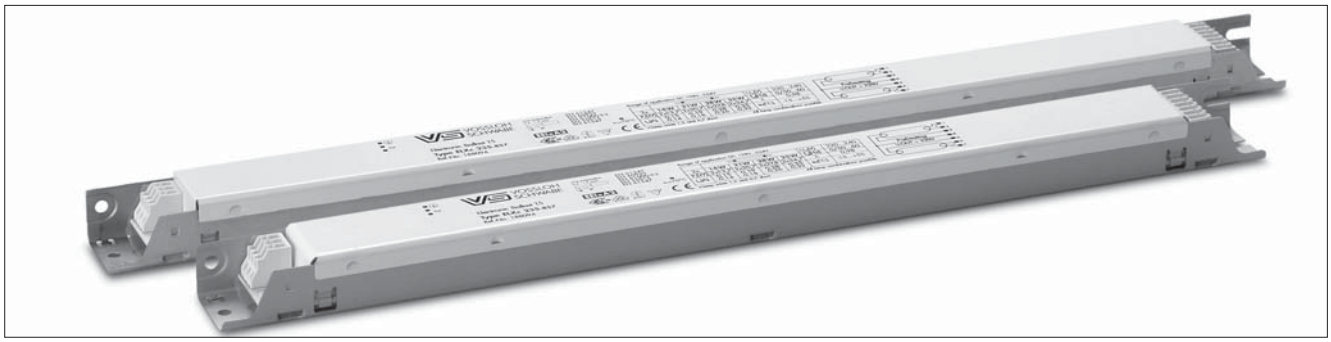

○ T5 ◉ TC ◉ BUILT-IN ○ 1–10 V
○ T8 ○ INDEPENDENT ○ DALI/PUSH

Lamp				Electronic ballast							System	
Output W	Type	Base	Power consumption W	Type	**Ref. No.**	Voltage AC 50, 60 Hz V±10%	Energy efficiency	Ambient temperature t_a (°C)	Casing temperature t_c (°C)	Casing	Output W	Luminous factor %
18	TC-F/-L	2G10/2G11	1 x 16.0	ELXc 140.862	**188140**	220–240	A2	–15 to 55	max. 70	M10	19.0	109.0
2x18	TC-F/-L	2G10/2G11	2 x 16.0	ELXc 240.863	**188616**	220–240	A2 BAT	–15 to 55	max. 70	M10	35.0	105.3
24	TC-F/-L	2G10/2G11	1 x 22.0	ELXc 140.862	**188140**	220–240	A2 BAT	–15 to 55	max. 70	M10	27.0	109.0
2x24	TC-F/-L	2G10/2G11	2 x 22.0	ELXc 240.863	**188616**	220–240	A2 BAT	–15 to 55	max. 70	M10	51.0	106.8
36	TC-F/-L	2G10/2G11	1 x 32.0	ELXc 140.862	**188140**	220–240	A2	–15 to 55	max. 70	M10	35.0	101.0
2x36	TC-F/-L	2G10/2G11	2 x 32.0	ELXc 240.863	**188616**	220–240	A2 BAT	–15 to 55	max. 70	M10	71.0	98.7
40	TC-L	2G11	1 x 40.0	ELXc 140.862	**188140**	220–240	A2	–15 to 55	max. 70	M10	46.0	104.0
2x40	TC-L	2G11	2 x 40.0	ELXc 240.863	**188616**	220–240	A2 BAT	–15 to 55	max. 70	M10	89.0	103.6
55	TC-L	2G11	1 x 55.0	ELXc 180.866	**188144**	220–240	A2 BAT	–15 to 55	max. 70	M10	62.0	107.3
2x55	TC-L	2G11	2 x 50.0	ELXc 254.865	**188618**	220–240	A2 BAT	–15 to 50	max. 70	M10	112.0	92.9
			2 x 55.0	ELXc 280.538	**188619**	220–240	A2 BAT	–15 to 50	max. 70	M11	120.0	100.0
80	TC-L	2G11	1 x 80.0	ELXc 180.866	**188144**	220–240	A2 BAT	–15 to 55	max. 70	M10	87.0	97.6
2x80	TC-L	2G11	2 x 80.0	ELXc 280.538	**188619**	220–240	A2 BAT	–15 to 50	max. 70	M11	175.0	100.0

Circuit diagrams see pages 362–365

ELXd – Dimmable for TC-F, TC-L Lamps

Electronic built-in ballasts
Casing: metal
Dimming range:
approx. 1–100% of lamp power
Power factor: ≥ 0.95 at 100% operation
DC voltage
for operation: 154–276 V (M22, M23, M24)
for operation: 176–264 V (M9)
for ignition: 198–264 V
Push-in terminals: 0.5–1 mm²
For the automatic luminaire wiring:
IDC terminals for leads H05V-U 0.5
RFI-suppressed
For luminaires of protection class I
Degree of protection: IP20
Fixing holes for screws M4
for lateral or base mounting
For lighting systems with
high switching frequency (> 5/day)
EOL shut down approved acc. to EN 61347 Test 2

M9

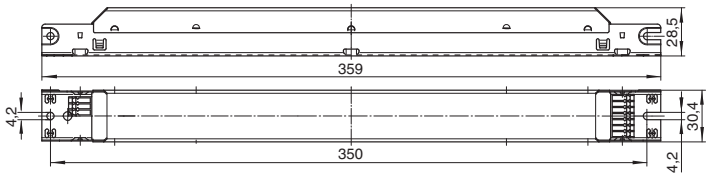

M23

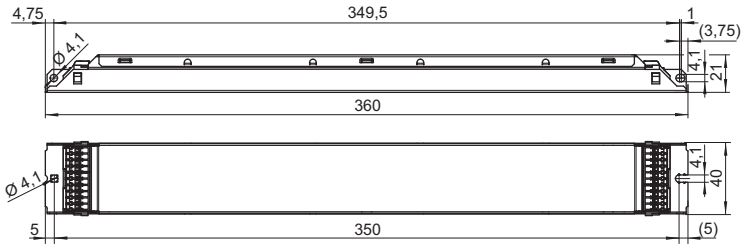

M22/M24

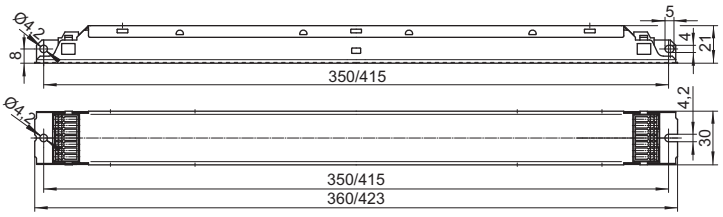



ELXd – Dimmable 1–10 V for TC-F, TC-L lamps

Control voltage: DC 1–10 V
acc. to EN 60929 with earth leakage current 0.5 mA
(protected if connected to mains voltage)
For use with open- or closed-loop control units

○ T5 ● TC ● BUILT-IN ● 1–10 V
○ T8 ○ INDEPENDENT ○ DALI/PUSH

Lamp				Electronic ballast							System	
Output W	Type	Base	Power consumption W	Type	**Ref. No.**	Voltage AC 50, 60 Hz V±10%	Energie efficiency	Ambient temperature t_a (°C)	Casing temperature t_c (°C)	Casing	Output W	Luminous factor %
18	TC-F/-L	2G10/2G11	1 x 16.0	ELXd 118.718	**188873**	220 - 240	EEI=A1	10 to 50	max. 70	M9	18.0	94.0
2x18	TC-F/-L	2G10/2G11	2 x 16.0	ELXd 218.719	**188874**	220 - 240	EEI=A1	10 to 50	max. 70	M9	36.0	90.6
24	TC-F/-L	2G10/2G11	1 x 22.0	ELXd 118.718	**188873**	220 - 240	EEI=A1	10 to 50	max. 70	M9	27.0	96.6
			1 x 23.0	ELXd 124.607	**188336**	220 - 240	A1 BAT	10 to 50	max. 75	M22	26.0	100.0
2x24	TC-F/-L	2G10/2G11	2 x 22.0	ELXd 218.719	**188874**	220 - 240	EEI=A1	10 to 50	max. 70	M9	52.0	100.8
			2 x 23.0	ELXd 224.608	**188337**	220 - 240	A1 BAT	10 to 50	max. 75	M24	49.0	100.0
3x24	TC-F/-L	2G10/2G11	3 x 24.0	ELXd 324.623	**188597**	220 - 240	A1 BAT	10 to 50	max. 75	M23	73.4	100.0
4x24	TC-F/-L	2G10/2G11	4 x 24.0	ELXd 424.624	**188598**	220 - 240	A1 BAT	10 to 50	max. 75	M23	97.6	100.0
36	TC-F/-L	2G10/2G11	1 x 32.0	ELXd 136.720	**188875**	220 - 240	A1 BAT	10 to 50	max. 70	M9	37.3	93.5
2x36	TC-F/-L	2G10/2G11	2 x 32.0	ELXd 236.721	**188876**	220 - 240	EEI=A1	10 to 50	max. 70	M9	72.0	92.6
40	TC-L	2G11	1 x 38.0	ELXd 139.609	**188338**	220 - 240	A1 BAT	10 to 50	max. 75	M22	42.0	100.0
2x40	TC-L	2G11	2 x 38.0	ELXd 239.610	**188339**	220 - 240	A1 BAT	10 to 50	max. 75	M24	82.0	100.0
55	TC-L	2G11	1 x 51.0	ELXd 158.722	**188877**	220 - 240	EEI=A1	10 to 50	max. 70	M9	56.0	92.5
			1 x 54.0	ELXd 154.611	**188340**	220 - 240	A1 BAT	10 to 50	max. 75	M22	59.0	100.0
2x55	TC-L	2G11	2 x 54.0	ELXd 254.612	**188341**	220 - 240	A1 BAT	10 to 50	max. 75	M24	115.0	100.0
80	TC-L	2G11	1 x 80.0	ELXd 180.613	**188342**	220 - 240	A1 BAT	10 to 50	max. 75	M22	88.0	100.0

Circuit diagrams see pages 362–365

ELXd – Dimmable with push key or DALI for TC-F, TC-L lamps

Complete implementation of the DALI-standard:
addressable, memory store for scenes and groups,
revertive information communication, physical and
RND-selection, standardized lamp characteristic
Low-power design ensures very low standby
power consumption
standby power consumption: ≤ 0.2 W

○ T5 ● TC ● BUILT-IN ○ 1–10 V
○ T8 ○ INDEPENDENT ● DALI/PUSH

Lamp				Electronic ballast							System	
Output W	Type	Base	Power consumption W	Type	**Ref. No.**	Voltage AC 50, 60 Hz V±10%	Energie efficiency	Ambient temperature t_a (°C)	Casing temperature t_c (°C)	Casing	Output W	Luminous factor %
18	TC-F/-L	2G10/2G11	1 x 16.0	ELXd 118.615	**188344**	220-240	A1 BAT	10 to 50	max. 75	M22	19.0	100.0
2x18	TC-F/-L	2G10/2G11	2 x 16.0	ELXd 218.616	**188345**	220-240	A1 BAT	10 to 50	max. 75	M24	37.0	100.0
24	TC-F/-L	2G10/2G11	1 x 23.0	ELXd 124.600	**188329**	220-240	A1 BAT	10 to 50	max. 75	M22	26.0	100.0
2x24	TC-F/-L	2G10/2G11	2 x 23.0	ELXd 224.601	**188330**	220-240	A1 BAT	10 to 50	max. 75	M24	49.0	100.0
3x24	TC-F/-L	2G10/2G11	3 x 23.0	ELXd 324.626	**188600**	220-240	A1 BAT	10 to 50	max. 75	M23	73.4	100.0
4x24	TC-F/-L	2G10/2G11	4 x 23.0	ELXd 424.628	**188602**	220-240	A1 BAT	10 to 50	max. 75	M23	97.6	100.0
36	TC-F/-L	2G10/2G11	1 x 32.0	ELXd 136.617	**188346**	220-240	A1 BAT	10 to 50	max. 75	M22	36.0	100.0
2x36	TC-F/-L	2G10/2G11	2 x 32.0	ELXd 236.618	**188347**	220-240	A1 BAT	10 to 50	max. 75	M24	69.0	100.0
40	TC-L	2G11	1 x 38.0	ELXd 139.602	**188331**	220-240	A1 BAT	10 to 50	max. 75	M22	42.0	100.0
2x40	TC-L	2G11	2 x 38.0	ELXd 239.621	**188350**	220-240	A1 BAT	10 to 50	max. 75	M24	82.0	100.0
55	TC-L	2G11	1 x 54.0	ELXd 154.603	**188332**	220-240	A1 BAT	10 to 50	max. 75	M22	59.0	100.0
2x55	TC-L	2G11	2 x 54.0	ELXd 254.604	**188333**	220-240	A1 BAT	10 to 50	max. 75	M24	115.0	100.0
80	TC-L	2G11	1 x 80.0	ELXd 180.605	**188334**	220-240	A1 BAT	10 to 50	max. 75	M22	88.0	100.0

Circuit diagrams see pages 362–365

ELXc – Warm Start for Compact Fluorescent Lamps

Electronic ballasts
Casing: heat-resistant polyamide (K2, K3)
or heat-resistant polycarbonate (K1, K4)
DC voltage
for operation: 176–264 V
for ignition: 198–264 V
(ELXc 242.837: DC voltage cannot
be reduced to 176 V)

Power factor: > 0.96 (K1: 0.9)
Push-in terminals with push-button: 0.5–1.5 mm²
RFI-suppressed
Constant power consumption
For luminaires of protection class I and II
Degree of protection: IP20
Fixing brackets for screws M4
for lateral or base mounting

For lighting systems with
high switching frequency (> 5/day)
EOL shut down approved acc. to
EN 61347 Test 2

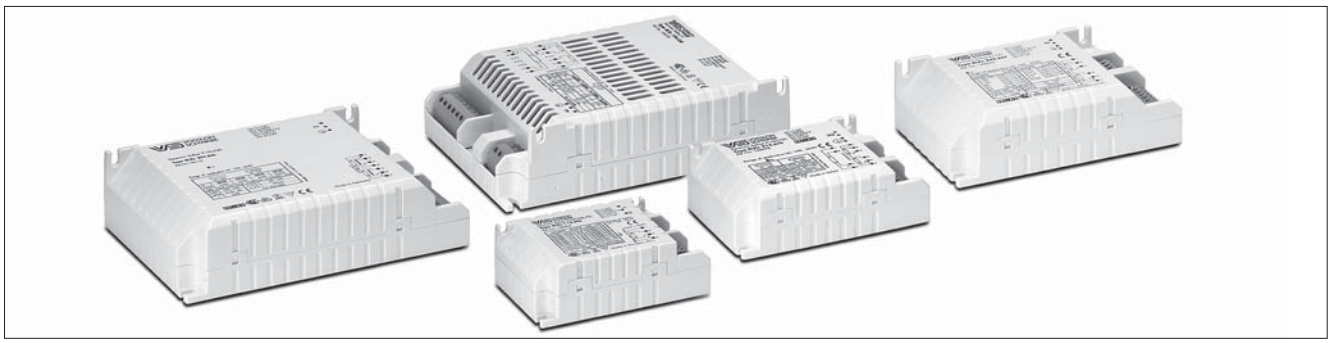

Electronic built-in ballasts

K1

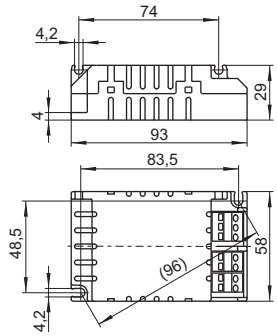

K2

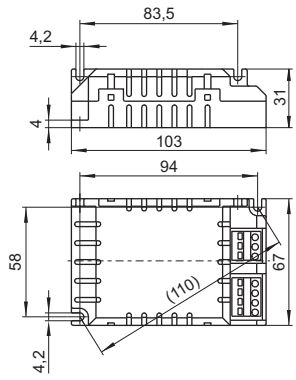

K3

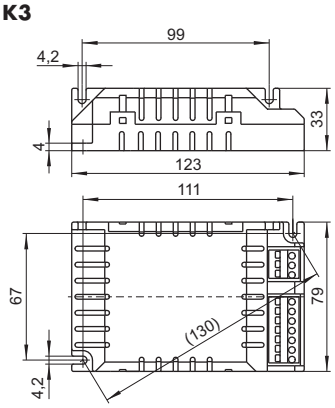

K4

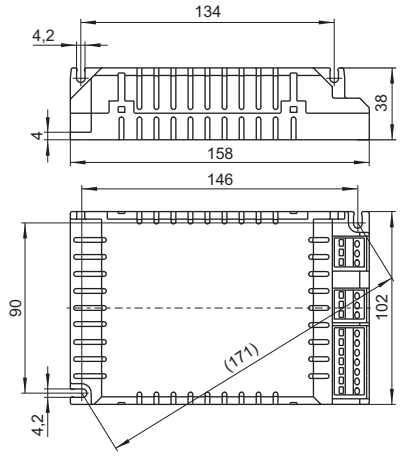

K4+ with venting slits

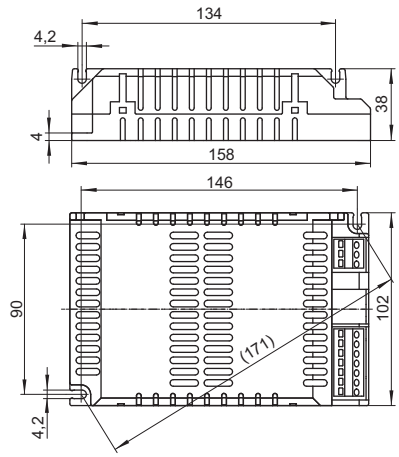

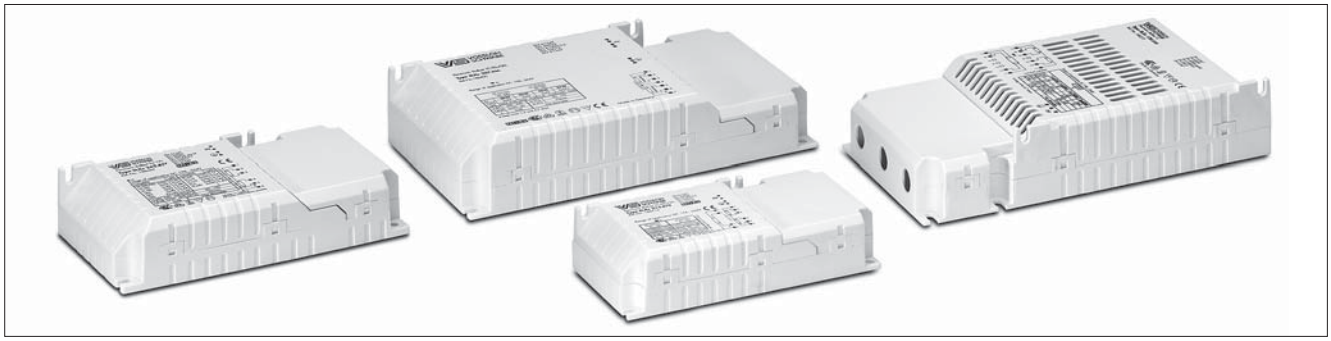

Independent electronic ballasts

K2 with cord grip

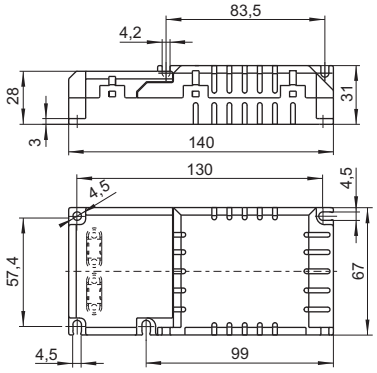

K2.1 with cord grip

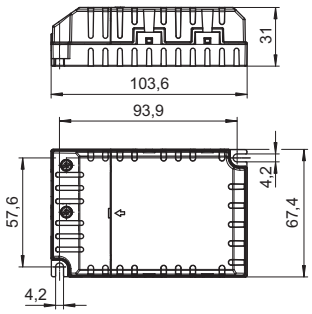

K3 with cord grip

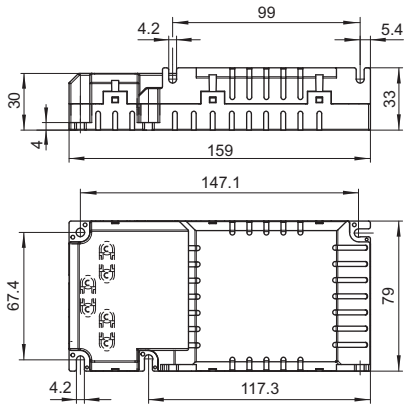

K4 with cord grip

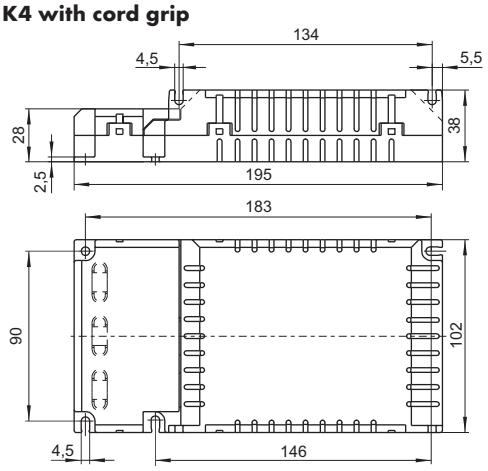

K4⁺ with cord grip and venting slits

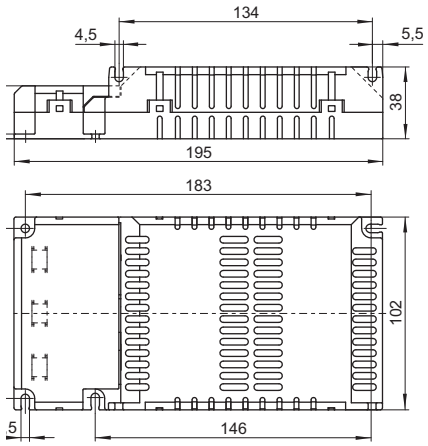

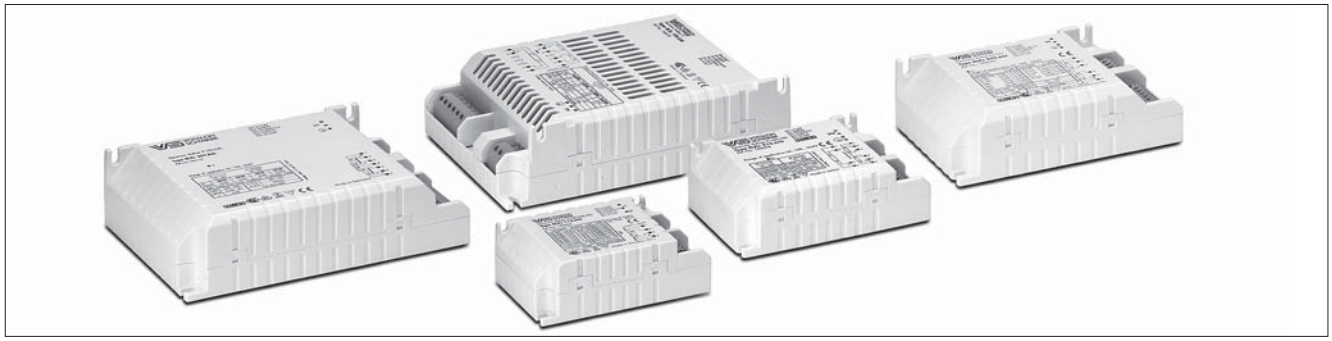

ELXc – Warm start for compact fluorescent lamps
Built-in ballasts

ELXc 213.870, 218.871, 142.872,
242.837, 155.378 have a second earth terminal
to ground the luminaires for example

○ **T5** ◉ **TC** ◉ **BUILT-IN** ○ **1–10 V**
○ **T8** ○ **INDEPENDENT** ○ **DALI/PUSH**

Lamp				Electronic ballast							System	
Output W	Type	Base	Power consumption W	Type	**Ref. No.**	Voltage AC 50, 60 Hz V±10%	Energie efficiency	Ambient temperature t_a (°C)	Casing temperature t_c (°C)	Casing	Output W	Luminous factor %
5	TC-SEL	2G7	1 x 5.0	ELXc 113.392	**188454**	220-240	A2	-20 to 55	max. 65	K1	6.5	100.0
7	TC-SEL	2G7	1 x 6.5	ELXc 113.392	**188454**	220-240	A2	-20 to 55	max. 65	K1	8.0	100.0
9	TC-SEL	2G7	1 x 8.0	ELXc 113.392	**188454**	220-240	A2 BAT	-20 to 55	max. 65	K1	10.0	100.0
				ELXc 213.870	**188698**	220-240	A2 BAT	-20 to 50	max. 65	K2	10.7	102.9
2x9	TC-SEL	2G7	2 x 8.0	ELXc 213.870	**188698**	220-240	A2 BAT	-20 to 50	max. 65	K2	19.4	102.9
10	TC-DEL	G24q-1	1 x 9.5	ELXc 113.392	**188454**	220-240	A2 BAT	-20 to 55	max. 65	K1	11.5	106.0
				ELXc 213.870	**188698**	220-240	A2 BAT	-20 to 50	max. 65	K2	10.9	99.2
2x10	TC-DEL	G24q-1	2 x 9.5	ELXc 213.870	**188698**	220-240	A2 BAT	-20 to 50	max. 65	K2	20.5	98.8
11	TC-SEL	2G7	1 x 11.0	ELXc 113.392	**188454**	220-240	A2 BAT	-20 to 55	max. 65	K1	13.5	100.0
				ELXc 213.870	**188698**	220-240	A2 BAT	-20 to 50	max. 65	K2	14.7	110.1
2x11	TC-SEL	2G7	2 x 11.0	ELXc 213.870	**188698**	220-240	A2 BAT	-20 to 50	max. 65	K2	27.9	116.1
13	TC-DEL/-TEL	G24q-1/GX24q-1	1 x 12.5	ELXc 113.392	**188454**	220-240	A2 BAT	-20 to 55	max. 65	K1	15.0	100.0
				ELXc 213.870	**188698**	220-240	A2 BAT	-20 to 50	max. 65	K2	15.0	102.9
2x13	TC-DEL/-TEL	G24q-1/GX24q-1	2 x 12.5	ELXc 213.870	**188698**	220-240	A2 BAT	-20 to 50	max. 65	K2	28.1	110.9
14	TC-TEL	GR14q-1	1 x 14.8	ELXc 217.873	**188760**	220-240	A2 BAT	-20 to 50	max. 65	K2	18.0	100.0
2x14	TC-TEL	GR14q-1	2 x 14.8	ELXc 217.873	**188760**	220-240	A2 BAT	-20 to 50	max. 65	K2	34.0	102.0
17	TC-TEL	GR14q-1	1 x 18.4	ELXc 217.873	**188760**	220-240	A2 BAT	-20 to 50	max. 65	K2	22.0	99.0
2x17	TC-TEL	GR14q-1	2 x 18.4	ELXc 217.873	**188760**	220-240	A2 BAT	-20 to 50	max. 65	K2	41.5	102.0
18	TC-DEL/-TEL	G24q-2/GX24q-2	1 x 16.5	ELXc 218.871	**188699**	220-240	A2 BAT	-20 to 50	max. 65	K2	21.0	104.8
	TC-F/-L	2G10/2G11	1 x 16.0	ELXc 142.872	**188700**	220-240	A2 BAT	-20 to 50	max. 65	K2	18.0	102.0
2x18	TC-DEL/-TEL	G24q-2/GX24q-2	2 x 16.5	ELXc 218.871	**188699**	220-240	A2 BAT	-20 to 50	max. 65	K2	38.0	100.7
	TC-F/-L	2G10/2G11	2 x 16.0	ELXc 242.837	**188643**	220-240	A2 BAT	-20 to 50	max. 65	K3	35.0	104.3
				ELXc 142.872	**188700**	220-240	A2 BAT	-20 to 50	max. 65	K2	34.0	98.0
22	T-R5	2GX13	1 x 22.0	ELXc 142.872	**188700**	220-240	A2 BAT	-20 to 50	max. 65	K2	26.0	103.0
				ELXc 128.869	**188589**	220-240	A2 BAT	-20 to 50	max. 70	K2	25.0	96.7
22+40	T-R5	2GX13	1 x 22+40	ELXc 242.837	**188643**	220-240	A2 BAT	-20 to 50	max. 65	K3	68.0	100.0
2x22	T-R5	2GX13	2 x 22.0	ELXc 242.837	**188643**	220-240	A2 BAT	-20 to 50	max. 65	K3	48.5	105.8
24	TC-F/-L	2G10/2G11	1 x 22.0	ELXc 142.872	**188700**	220-240	A2 BAT	-20 to 50	max. 65	K2	27.0	105.0
			1 x 22.5	ELXc 128.869	**188589**	220-240	A2 BAT	-20 to 50	max. 70	K2	25.0	95.8
2x24	TC-F/-L	2G10/2G11	2 x 22.0	ELXc 242.837	**188643**	220-240	A2 BAT	-20 to 50	max. 65	K3	48.5	106.2
				ELXc 142.872	**188700**	220-240	A2 BAT	-20 to 50	max. 65	K2	47.0	102.0
26	TC-DEL/-TEL	G24q-3/GX24q-3	1 x 24.0	ELXc 142.872	**188700**	220-240	A2 BAT	-20 to 50	max. 65	K2	26.0	104.0
2x26	TC-DEL/-TEL	G24q-3/GX24q-3	2 x 24.0	ELXc 242.837	**188643**	220-240	A2 BAT	-20 to 50	max. 65	K3	53.0	106.1
				ELXc 257.836	**188132**	220-240	A2 BAT	-20 to 50	max. 70	K4	52.0	106.2
				ELXc 142.872	**188700**	220-240	A2 BAT	-20 to 50	max. 65	K2	53.0	105.0

Circuit diagrams see pages 362-365

ELXc – Warm start for compact fluorescent lamps
Built-in ballasts

ELXc 213.870, 218.871, 142.872,
242.837, 155.378 have a second earth terminal
to ground the luminaires for example

○ T5 ◉ TC ◉ BUILT-IN ○ 1–10 V
○ T8 ○ INDEPENDENT ○ DALI/PUSH

Lamp				Electronic ballast							System	
Output W	Type	Base	Power consumption W	Type	**Ref. No.**	Voltage AC 50, 60 Hz V±10%	Energie efficiency	Ambient temperature t_a (°C)	Casing temperature t_c (°C)	Casing	Output W	Luminous factor %
28	TC-DD	GR10q	1 x 26.0	ELXc 128.869	**188589**	220-240	A2 BAT	-20 to 50	max. 70	K2	32.0	98.1
32	TC-TEL	GX24q-3	1 x 32.0	ELXc 142.872	**188700**	220-240	A2 BAT	-20 to 50	max. 65	K2	33.0	102.0
2x32	TC-TEL	GX24q-3	2 x 32.0	ELXc 242.837	**188643**	220-240	A2 BAT	-20 to 50	max. 65	K3	70.5	104.8
				ELXc 257.836	**188132**	220-240	A2 BAT	-20 to 50	max. 70	K4	70.0	109.4
36	TC-F/-L	2G10/2G11	1 x 32.0	ELXc 142.872	**188700**	220-240	A2 BAT	-20 to 50	max. 65	K2	34.0	105.0
2x36	TC-F/-L	2G10/2G11	2 x 32.0	ELXc 242.837	**188643**	220-240	A2 BAT	-20 to 50	max. 65	K3	70.5	101.8
38	TC-DD	GR10q	1 x 36.0	ELXc 142.872	**188700**	220-240	A2 BAT	-20 to 50	max. 65	K2	38.0	95.0
2x38	TC-DD	GR10q	2 x 36.0	ELXc 242.837	**188643**	220-240	A2 BAT	-20 to 50	max. 65	K3	79.2	101.3
40	TC-L	2G11	1 x 40.0	ELXc 142.872	**188700**	220-240	A2 BAT	-20 to 50	max. 65	K2	43.0	99.0
	T-R5	2GX13	1 x 40.0	ELXc 142.872	**188700**	220-240	A2 BAT	-20 to 50	max. 65	K2	41.0	96.0
2x40	TC-L	2G11	2 x 40.0	ELXc 242.837	**188643**	220-240	A2 BAT	-20 to 50	max. 65	K3	88.0	101.3
	T-R5	2GX13	2 x 40.0	ELXc 242.837	**188643**	220-240	A2 BAT	-20 to 50	max. 65	K3	88.0	101.1
42	TC-TEL	GX24q-4	1 x 42.0	ELXc 142.872	**188700**	220-240	A2 BAT	-20 to 50	max. 65	K2	45.0	99.0
2x42	TC-TEL	GX24q-4	2 x 43.0	ELXc 242.837	**188643**	220-240	A2 BAT	-20 to 50	max. 65	K3	94.5	100.6
				ELXc 257.836	**188132**	220-240	A2 BAT	-20 to 50	max. 70	K4	94.0	104.9
55	TC-L	2G11	1 x 55.6	ELXc 155.378	**188680**	220-240	A2 BAT	-20 to 50	max. 70	K3	60.0	102.4
	T-R5	2GX13	1 x 55.6	ELXc 155.378	**188680**	220-240	A2 BAT	-20 to 50	max. 70	K3	60.0	101.2
57	TC-TEL	GX24q-5	1 x 57.0	ELXc 170.833	**188682**	220-240	A2 BAT	-20 to 50	max. 65	K3	63.0	105.0
2x57	TC-TEL	GX24q-5	2 x 57.5	ELXc 257.836	**188132**	220-240	A2 BAT	-20 to 50	max. 70	K4	130.0	100.0
60	TC-TEL	2G8-1	1 x 63.0	ELXc 120.838	**188238**	220-240	A2 BAT	-20 to 60	max. 70	K4+	70.0	106.1
	T-R5	2GX13	1 x 60.6	ELXc 155.378	**188680**	220-240	A2	-20 to 50	max. 70	K3	66.0	109.5
2x60	TC-TEL	2G8-1	2 x 63.0	ELXc 120.838	**188238**	220-240	A2 BAT	-20 to 60	max. 70	K4+	139.0	100.0
70	TC-TEL	GX24q-6	1 x 70.0	ELXc 170.833	**188682**	220-240	A2 BAT	-20 to 50	max. 65	K3	77.0	110.0
80	TC-L	2G11	1 x 80.5	ELXc 155.378	**188680**	220-240	A2 BAT	-20 to 50	max. 70	K3	88.0	101.3
85	TC-TEL	2G8-1	1 x 87.0	ELXc 120.838	**188238**	220-240	A2 BAT	-20 to 60	max. 70	K4+	96.0	100.0
120	TC-TEL	2G8-1	1 x 122.0	ELXc 120.838	**188238**	220-240	A2	-20 to 60	max. 70	K4+	134.0	100.0

Circuit diagrams see pages 362–365

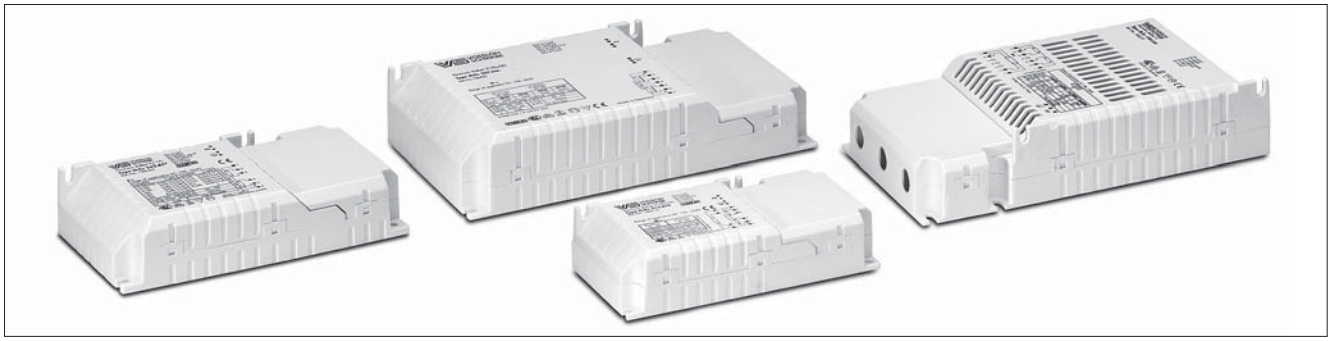

ELXc – Warm start for compact fluorescent lamps – Independent ballasts

For ELXc 257.836 a
loop-through of the mains supply is possible
ELXc 213.870, 218.871, 142.872,
242.837, 155.378 have a second earth terminal
to ground the luminaires

◯ **T5** ◉ **TC** ◯ **BUILT-IN** ◯ **1–10 V**
◯ **T8** ◉ **INDEPENDENT** ◯ **DALI/PUSH**

Lamp				Electronic ballast							System	
Output W	Type	Base	Power consumption W	Type	**Ref. No.**	Voltage AC 50, 60 Hz V±10%	Energy efficiency	Ambient temperature t_a (°C)	Casing temperature t_c (°C)	Casing	Output W	Luminous factor %
9	TC-SEL	2G7	1 x 8.0	ELXc 213.870	**188712**	220-240	A2 BAT	-20 to 50	max. 65	K2	10.7	102.9
2x9	TC-SEL	2G7	2 x 8.0	ELXc 213.870	**188712**	220-240	A2 BAT	-20 to 50	max. 65	K2	19.4	102.9
10	TC-DEL	G24q-1	1 x 9.5	ELXc 213.870	**188712**	220-240	A2 BAT	-20 to 50	max. 65	K2	10.9	99.2
2x10	TC-DEL	G24q-1	2 x 9.5	ELXc 213.870	**188712**	220-240	A2 BAT	-20 to 50	max. 65	K2	20.5	98.8
11	TC-SEL	2G7	1 x 11.0	ELXc 213.870	**188712**	220-240	A2 BAT	-20 to 50	max. 65	K2	14.7	110.1
2x11	TC-SEL	2G7	2 x 11.0	ELXc 213.870	**188712**	220-240	A2 BAT	-20 to 50	max. 65	K2	27.9	116.1
13	TC-DEL/-TEL	G24q-1/GX24q-1	1 x 12.5	ELXc 213.870	**188712**	220-240	A2 BAT	-20 to 50	max. 65	K2	15.0	102.9
2x13	TC-DEL/-TEL	G24q-1/GX24q-1	2 x 12.5	ELXc 213.870	**188712**	220-240	A2 BAT	-20 to 50	max. 65	K2	28.1	110.9
14	TC-TEL	GR14q-1	1 x 14.8	ELXc 217.873	**188761**	220-240	A2 BAT	-20 to 50	max. 65	K2	18.0	100.0
2x14	TC-TEL	GR14q-1	2 x 14.8	ELXc 217.873	**188761**	220-240	A2 BAT	-20 to 50	max. 65	K2	34.0	102.0
17	TC-TEL	GR14q-1	1 x 18.4	ELXc 217.873	**188761**	220-240	A2 BAT	-20 to 50	max. 65	K2	22.0	99.0
2x17	TC-TEL	GR14q-1	2 x 18.4	ELXc 217.873	**188761**	220-240	A2 BAT	-20 to 50	max. 65	K2	41.5	102.0
18	TC-DEL/-TEL	G24q-2/GX24q-2	1 x 16.5	ELXc 218.871	**188713**	220-240	A2 BAT	-20 to 50	max. 65	K2	21.0	104.8
	TC-F/-L	2G10/2G11	1 x 16.0	ELXc 142.872	**188714**	220-240	A2 BAT	-20 to 50	max. 65	K2	18.0	102.0
2x18	TC-DEL/-TEL	G24q-2/GX24q-2	2 x 16.5	ELXc 218.871	**188713**	220-240	A2 BAT	-20 to 50	max. 65	K2	38.0	100.7
	TC-F/-L	2G10/2G11	2 x 16.0	ELXc 242.837	**188687**	220-240	A2 BAT	-20 to 50	max. 65	K3	35.0	104.3
				ELXc 142.872	**188714**	220-240	A2 BAT	-20 to 50	max. 65	K2	34.0	98.0
22	T-R5	2GX13	1 x 22.0	ELXc 142.872	**188714**	220-240	A2 BAT	-20 to 50	max. 65	K2	26.0	103.0
				ELXc 128.869	**188590**	220-240	A2 BAT	-20 to 50	max. 70	K2	25.0	96.7
22+40	T-R5	2GX13	1 x 22+40	ELXc 242.837	**188687**	220-240	A2 BAT	-20 to 50	max. 65	K3	68.0	100.0
2x22	T-R5	2GX13	2 x 22.0	ELXc 242.837	**188687**	220-240	A2 BAT	-20 to 50	max. 65	K3	48.5	105.8
24	TC-F/-L	2G10/2G11	1 x 22.0	ELXc 142.872	**188714**	220-240	A2 BAT	-20 to 50	max. 65	K2	27.0	105.0
	TC-F/-L	2G10/2G11	1 x 22.5	ELXc 128.869	**188590**	220-240	A2	-20 to 50	max. 70	K2	25.0	95.8
2x24	TC-F/-L	2G10/2G11	2 x 22.0	ELXc 242.837	**188687**	220-240	A2 BAT	-20 to 50	max. 65	K3	48.5	106.2
				ELXc 142.872	**188714**	220-240	A2 BAT	-20 to 50	max. 65	K2	47.0	102.0
26	TC-DEL/-TEL	G24q-3/GX24q-3	1 x 24.0	ELXc 142.872	**188714**	220-240	A2 BAT	-20 to 50	max. 65	K2	26.0	104.0
2x26	TC-DEL/-TEL	G24q-3/GX24q-3	2 x 24.0	ELXc 242.837	**188687**	220-240	A2 BAT	-20 to 50	max. 65	K3	53.0	106.1
				ELXc 257.836	**188400**	220-240	A2 BAT	-20 to 50	max. 70	K4	52.0	106.2
				ELXc 142.872	**188714**	220-240	A2 BAT	-20 to 50	max. 65	K2	53.0	105.0

Circuit diagrams see pages 362–365

ELXc – Compact warm start for compact fluorescent lamps – Independent ballasts

For ELXc 257.836 a
loop-through of the mains supply is possible
ELXc 213.870, 218.871, 142.872,
242.837, 155.378 have a second earth terminal
to ground the luminaires for example

○ T5 ◉ TC ○ BUILT-IN ○ 1–10 V
○ T8 ◉ INDEPENDENT ○ DALI/PUSH

Lamp				Electronic ballast							System	
Output W	Type	Base	Power consumption W	Type	**Ref. No.**	Voltage AC 50, 60 Hz V±10%	Energy efficiency	Ambient temperature t_a (°C)	Casing temperature t_c (°C)	Casing	Output W	Luminous factor %
28	TC-DD	GR10q	1 x 26.0	ELXc 128.869	**188590**	220-240	A2 BAT	-20 to 50	max. 70	K2	32.0	98.1
32	TC-TEL	GX24q-3	1 x 32.0	ELXc 142.872	**188714**	220-240	A2 BAT	-20 to 50	max. 65	K2	33.0	102.0
2x32	TC-TEL	GX24q-3	2 x 32.0	ELXc 242.837	**188687**	220-240	A2 BAT	-20 to 50	max. 65	K3	70.5	104.8
				ELXc 257.836	**188400**	220-240	A2 BAT	-20 to 50	max. 70	K4	70.0	109.4
36	TC-F/-L	2G10/2G11	1 x 32.0	ELXc 142.872	**188714**	220-240	A2 BAT	-20 to 50	max. 65	K2	34.0	105.0
2x36	TC-F/-L	2G10/2G11	2 x 32.0	ELXc 242.837	**188687**	220-240	A2 BAT	-20 to 50	max. 65	K3	70.5	101.8
38	TC-DD	GR10q	1 x 36.0	ELXc 142.872	**188714**	220-240	A2 BAT	-20 to 50	max. 65	K2	38.0	95.0
2x38	TC-DD	GR10q	2 x 36.0	ELXc 242.837	**188687**	220-240	A2 BAT	-20 to 50	max. 65	K3	79.2	101.3
40	TC-L	2G11	1 x 40.0	ELXc 142.872	**188714**	220-240	A2 BAT	-20 to 50	max. 65	K2	43.0	99.0
	T-R5	2GX13	1 x 40.0	ELXc 142.872	**188714**	220-240	A2 BAT	-20 to 50	max. 65	K2	41.0	96.0
2x40	TC-L	2G11	2 x 40.0	ELXc 242.837	**188687**	220-240	A2 BAT	-20 to 50	max. 65	K3	88.0	101.3
	T-R5	2GX13	2 x 40.0	ELXc 242.837	**188687**	220-240	A2 BAT	-20 to 50	max. 65	K3	88.0	101.1
42	TC-TEL	GX24q-4	1 x 42.0	ELXc 142.872	**188714**	220-240	A2 BAT	-20 to 50	max. 65	K2	45.0	99.0
2x42	TC-TEL	GX24q-4	2 x 43.0	ELXc 242.837	**188687**	220-240	A2 BAT	-20 to 50	max. 65	K3	94.5	100.6
				ELXc 257.836	**188400**	220-240	A2 BAT	-20 to 50	max. 70	K4	94.0	104.9
55	TC-L	2G11	1 x 55.6	ELXc 155.378	**188681**	220-240	A2 BAT	-20 to 50	max. 70	K3	60.0	102.4
	T-R5	2GX13	1 x 55.6	ELXc 155.378	**188681**	220-240	A2 BAT	-20 to 50	max. 70	K3	60.0	101.2
57	TC-TEL	GX24q-5	1 x 57.0	ELXc 170.833	**188683**	220-240	A2 BAT	-20 to 50	max. 65	K3	63.0	105.0
2x57	TC-TEL	GX24q-5	2 x 57.0	ELXc 257.836	**188400**	220-240	A2 BAT	-20 to 50	max. 70	K4	130.0	100.0
60	TC-TEL	2G8-1	1 x 63.0	ELXc 120.838	**188273**	220-240	A2 BAT	-20 to 60	max. 70	K4+	70.0	106.1
	T-R5	2GX13	1 x 60.6	ELXc 155.378	**188681**	220-240	A2	-20 to 50	max. 70	K3	66.0	109.5
2x60	TC-TEL	2G8-1	2 x 63.0	ELXc 120.838	**188273**	220-240	A2 BAT	-20 to 60	max. 70	K4+	139.0	100.0
70	TC-TEL	GX24q-6	1 x 70.0	ELXc 170.833	**188683**	220-240	A2 BAT	-20 to 50	max. 65	K3	77.0	110.0
80	TC-L	2G11	1 x 80.5	ELXc 155.378	**188681**	220-240	A2 BAT	-20 to 50	max. 70	K3	88.0	101.3
85	TC-TEL	2G8-1	1 x 87.0	ELXc 120.838	**188273**	220-240	A2 BAT	-20 to 60	max. 70	K4+	96.0	100.0
120	TC-TEL	2G8-1	1 x 122.0	ELXc 120.838	**188273**	220-240	A2	-20 to 60	max. 70	K4+	134.0	100.0

Circuit diagrams see pages 362–365

ELXc EffectLine

Warm start for compact fluorescent lamps – Independent ballasts

○ T5 ◉ TC ○ BUILT-IN ○ 1–10 V
○ T8 ◉ INDEPENDENT ○ DALI/PUSH

Lamp				Electronic ballast							System	
Output W	Type	Base	Power consumption W	Type	**Ref. No.**	Voltage AC 50, 60 Hz V±10%	Energy efficiency	Ambient temperature t_a (°C)	Casing temperature t_c (°C)	Casing	Output W	Luminous factor %
new 26	TC-DEL/-TEL	G24q-3/GX24q-3	1 x 24.0	ELXc 226.878	**183040**	220-240	A2 BAT	-20 to 55	75	K2.1	27.0	105.0
new 2x26	TC-DEL/-TEL	G24q-3/GX24q-3	2 x 24.0	ELXc 226.878	**183040**	220-240	A2 BAT	-20 to 55	75	K2.1	49.5	100.0

Circuit diagrams see pages 362–365

ELXc – Warm Start for Compact Fluorescent Lamps

Independent electronic ballasts
Casing: heat-resistant polyamide (K3)
Power factor: > 0.96
DC voltage
for operation: 176–264 V
for ignition: 198–264 V
Push-in terminals with push-button: 0.5–1.5 mm²
Mains and earth through-wiring on primary side is possible
Existing terminals: 2xL; 2xN; 3xPE
RFI-suppressed
Constant power consumption
For luminaires of protection class I and II
Degree of protection: IP20
Fixing brackets for screws M4
for lateral or base mounting
For lighting systems with
high switching frequency (> 5/day)
EOL shut down approved acc. to EN 61347 Test 2

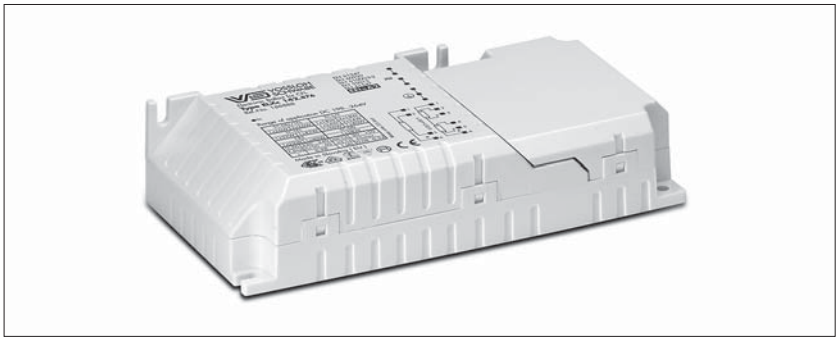

K3 with cord grip

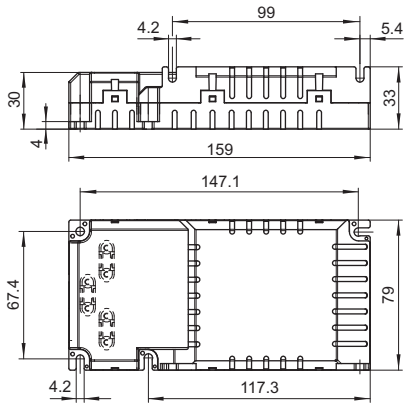

○ T5 ● TC ○ BUILT-IN ○ 1–10 V
○ T8 ● INDEPENDENT ○ DALI/PUSH

Lamp				Electronic ballast							System	
Output W	Type	Base	Power consumption W	Type	**Ref. No.**	Voltage AC 50, 60 Hz V±10%	Energy efficiency	Ambient temperature t_a (°C)	Casing temperature t_c (°C)	Casing	Output W	Luminous factor %
9	TC-SEL	2G7	1 x 8.0	ELXc 213.874	**188886**	220 - 240	A2 BAT	-20 to 50	max. 65	K3	10.7	102.9
2x9	TC-SEL	2G7	2 x 8.0	ELXc 213.874	**188886**	220 - 240	A2 BAT	-20 to 50	max. 65	K3	19.4	102.9
10	TC-DEL	G24q-1	1 x 9.5	ELXc 213.874	**188886**	220 - 240	A2 BAT	-20 to 50	max. 65	K3	10.9	99.2
2x10	TC-DEL	G24q-1	2 x 9.5	ELXc 213.874	**188886**	220 - 240	A2 BAT	-20 to 50	max. 65	K3	20.5	98.8
11	TC-SEL	2G7	1 x 11.0	ELXc 213.874	**188886**	220 - 240	A2 BAT	-20 to 50	max. 65	K3	14.7	110.1
2x11	TC-SEL	2G7	2 x 11.0	ELXc 213.874	**188886**	220 - 240	A2 BAT	-20 to 50	max. 65	K3	27.9	116.1
13	TC-DEL/-TEL	G24q-1/GX24q-1	1 x 12.5	ELXc 213.874	**188886**	220 - 240	A2 BAT	-20 to 50	max. 65	K3	15.0	102.9
2x13	TC-DEL/-TEL	G24q-1/GX24q-1	2 x 12.5	ELXc 213.874	**188886**	220 - 240	A2 BAT	-20 to 50	max. 65	K3	28.1	110.9
18	TC-DEL/-TEL	G24q-2/GX24q-2	1 x 16.5	ELXc 218.875	**188887**	220 - 240	A2 BAT	-20 to 50	max. 65	K3	21.0	104.8
	TC-F/-L	2G10/2G11	1 x 16.0	ELXc 142.876	**188888**	220 - 240	A2 BAT	-20 to 50	max. 65	K3	18.0	102.0
2x18	TC-DEL/-TEL	G24q-2/GX24q-2	2 x 16.5	ELXc 218.875	**188887**	220 - 240	A2 BAT	-20 to 50	max. 65	K3	38.0	100.7
	TC-F/-L	2G10/2G11	2 x 16.0	ELXc 242.877	**188889**	220 - 240	A2	-20 to 50	max. 65	K3	35.0	104.3
				ELXc 142.876	**188888**	220 - 240	A2 BAT	-20 to 50	max. 65	K3	34.0	98.0
22	T-R5	2GX13	1 x 22.0	ELXc 142.876	**188888**	220 - 240	A2 BAT	-20 to 50	max. 65	K3	26.0	103.0
22+40	T-R5	2GX13	1 x 22+40	ELXc 242.877	**188889**	220 - 240	A2	-20 to 50	max. 65	K3	68.0	100.0
2x22	T-R5	2GX13	2 x 22.0	ELXc 242.877	**188889**	220 - 240	A2	-20 to 50	max. 65	K3	48.5	105.8
24	TC-F/-L	2G10/2G11	1 x 22.0	ELXc 142.876	**188888**	220 - 240	A2 BAT	-20 to 50	max. 65	K3	27.0	105.0
2x24	TC-F/-L	2G10/2G11	2 x 22.0	ELXc 242.877	**188889**	220 - 240	A2 BAT	-20 to 50	max. 65	K3	48.5	106.2
				ELXc 142.876	**188888**	220 - 240	A2 BAT	-20 to 50	max. 65	K3	47.0	102.0

Circuit diagrams see pages 362–365

ELXc – Warm start for compact fluorescent lamps – Independent ballasts

○ T5 ◉ TC ○ BUILT-IN ○ 1–10 V
○ T8 ◉ INDEPENDENT ○ DALI/PUSH

Lamp				Electronic ballast							System	
Output W	Type	Base	Power consumption W	Type	**Ref. No.**	Voltage AC 50, 60 Hz V±10%	Energy efficiency	Ambient temperature t_a (°C)	Casing temperature t_c (°C)	Casing	Output W	Luminous factor %
26	TC-DEL/-TEL	G24q-3/GX24q-3	1 x 24.0	ELXc 142.876	**188888**	220-240	A2	-20 to 50	max. 65	K3	26.0	104.0
2x26	TC-DEL/-TEL	G24q-3/GX24q-3	2 x 24.0	ELXc 242.877	**188889**	220-240	A2	-20 to 50	max. 65	K3	53.0	106.1
				ELXc 142.876	**188888**	220-240	A2	-20 to 50	max. 65	K3	53.0	105.0
32	TC-TEL	GX24q-3	1 x 32.0	ELXc 142.876	**188888**	220-240	A2	-20 to 50	max. 65	K3	33.0	102.0
2x32	TC-TEL	GX24q-3	2 x 32.0	ELXc 242.877	**188889**	220-240	A2	-20 to 50	max. 65	K3	70.5	104.8
36	TC-F/-L	2G10/2G11	1 x 32.0	ELXc 142.876	**188888**	220-240	A2 BAT	-20 to 50	max. 65	K3	34.0	105.0
2x36	TC-F/-L	2G10/2G11	2 x 32.0	ELXc 242.877	**188889**	220-240	A2 BAT	-20 to 50	max. 65	K3	70.5	101.8
38	TC-DD	GR10q	1 x 36.0	ELXc 142.876	**188888**	220-240	A2	-20 to 50	max. 65	K3	38.0	95.0
2x38	TC-DD	GR10q	2 x 36.0	ELXc 242.877	**188889**	220-240	A2 BAT	-20 to 50	max. 65	K3	79.2	101.3
40	TC-L	2G11	1 x 40.0	ELXc 142.876	**188888**	220-240	A2	-20 to 50	max. 65	K3	43.0	99.0
	T-R5	2GX13	1 x 40.0	ELXc 142.876	**188888**	220-240	A2	-20 to 50	max. 65	K3	41.0	96.0
2x40	TC-L	2G11	2 x 40.0	ELXc 242.877	**188889**	220-240	A2	-20 to 50	max. 65	K3	88.0	101.3
	T-R5	2GX13	2 x 40.0	ELXc 242.877	**188889**	220-240	A2	-20 to 50	max. 65	K3	88.0	101.1
42	TC-TEL	GX24q-4	1 x 42.0	ELXc 142.876	**188888**	220-240	A2	-20 to 50	max. 65	K3	45.0	99.0
2x42	TC-TEL	GX24q-4	2 x 43.0	ELXc 242.877	**188889**	220-240	A2	-20 to 50	max. 65	K3	94.5	100.6

Circuit diagrams see pages 362-365

ELXd – Dimmable for TC-DEL, TC-TEL Lamps

Electronic ballasts
Casing: heat-resistant polycarbonate
Dimming range:
approx. 3–100% of lamp power
Push-in terminals with push-button: 0.5 - 1.5 mm²
RFI-suppressed

Degree of protection: IP20
For luminaires of protection class I
Fixing brackets for screws M4
for lateral or base mounting
For lighting systems with
high switching frequency (> 5/day)

EOL shut down approved
acc. to EN 61347 Test 2

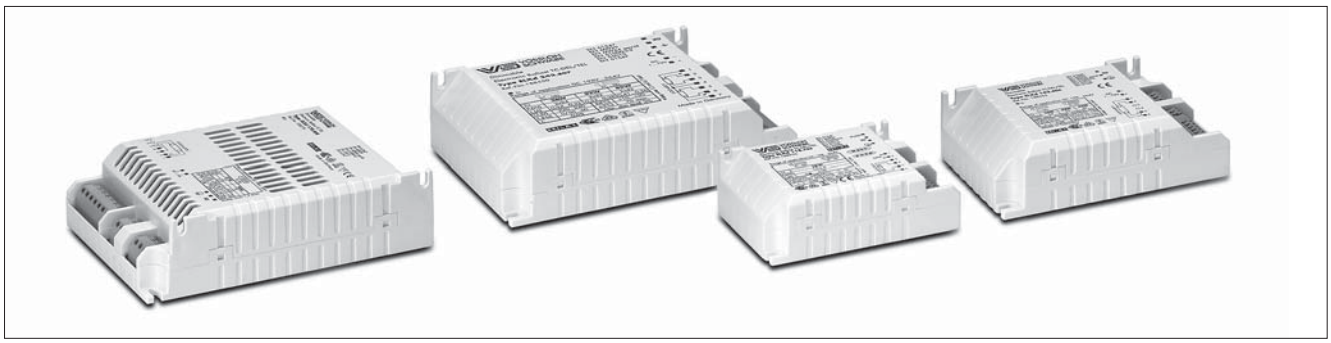

Electronic built-in ballasts

K2

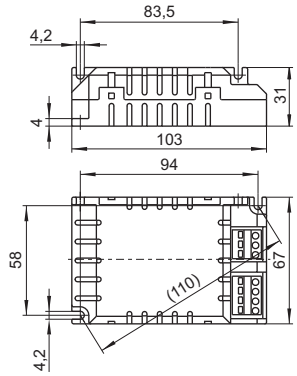

K3

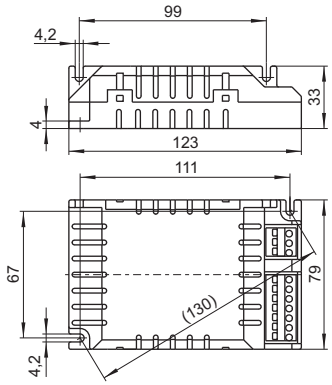

K4

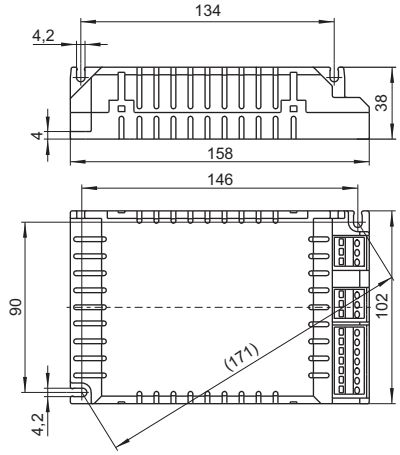

K4⁺ with venting slits

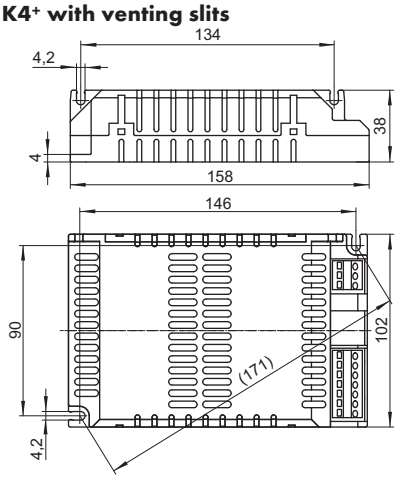

ELXd – Dimmable for TC-DEL, TC-TEL Lamps

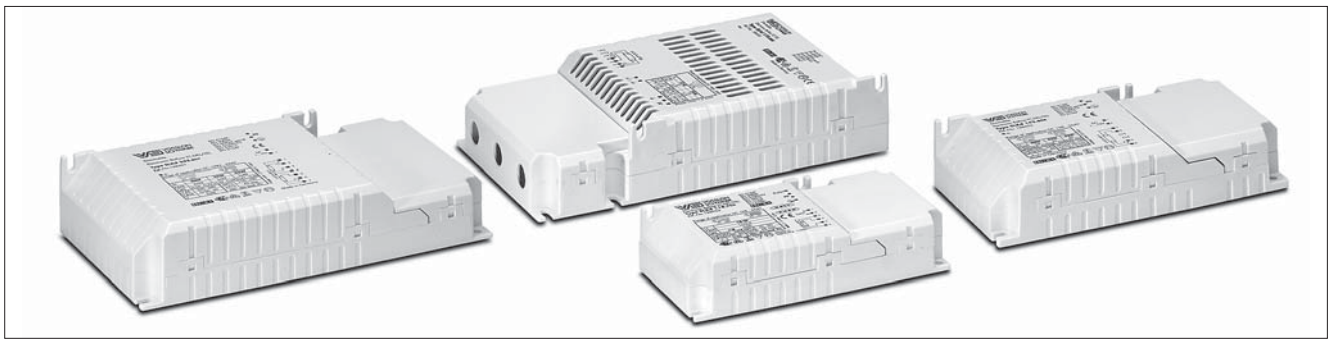

Independent electronic ballasts

K2 with cord grip

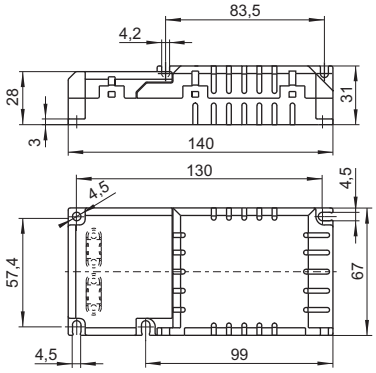

K3 with cord grip

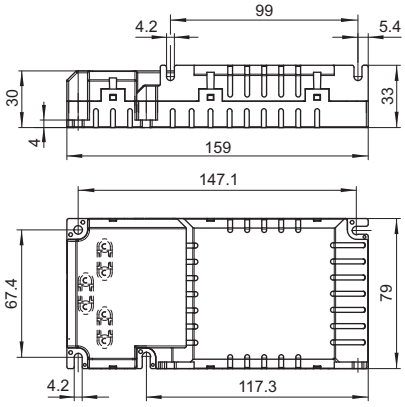

K4 with cord grip

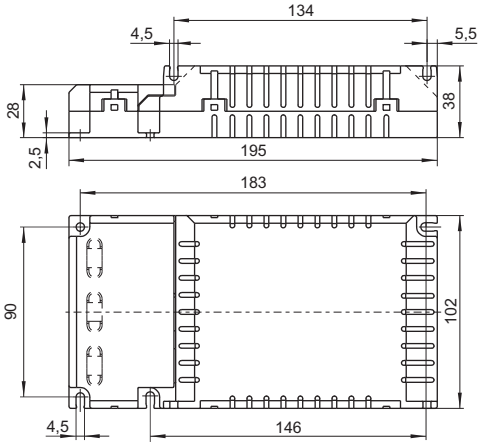

K4⁺ with cord grip and venting slits

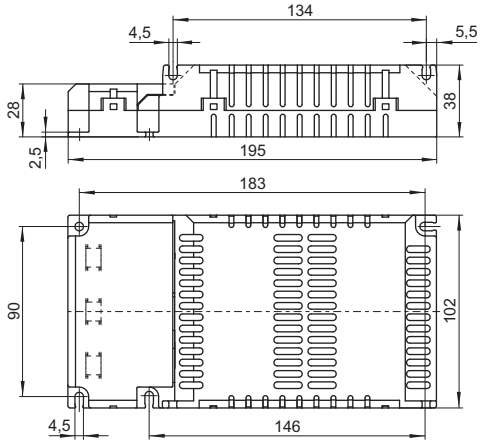

ELXd – Dimmable 1–10 V for TC-DEL, TC-TEL lamps

Electronic built-in ballasts
Casing: K3, K4 and K4+ with venting slits
Control voltage: DC 1–10 V acc. to
EN 60929 with earth leakage current 0.5 mA
(protected if connected to mains voltage)
For use with open- or closed-loop control units
Power factor: 0.98 at 100% operation

DC voltage
for operation: 176–264 V
for ignition: 198–264 V

○ T5 ◉ TC ◉ BUILT-IN ◉ 1–10 V
○ T8 ○ INDEPENDENT ○ DALI/PUSH

Lamp				Electronic ballast							System	
Output W	Type	Base	Power consumption W	Type	**Ref. No.**	Voltage AC 50, 60 Hz V±10%	Energy efficiency	Ambient temperature t_a (°C)	Casing temperature t_c (°C)	Casing	Output W	Luminous factor %
18	TC-DEL/-TEL	G24q-2/GX24q-2	1 x 16.5	ELXd 118.802	**188564**	220–240	A1 BAT	5 to 55	max. 70	K3	21.0	100.0
2x18	TC-DEL/-TEL	G24q-2/GX24q-2	2 x 16.5	ELXd 218.803	**188549**	220–240	A1 BAT	5 to 55	max. 70	K4	38.0	100.0
26	TC-DEL/-TEL	G24q-3/GX24q-3	1 x 24.0	ELXd 142.806	**188565**	220–240	A1 BAT	10 to 50	max. 70	K3	27.0	100.0
2x26	TC-DEL/-TEL	G24q-3/GX24q-3	2 x 24.0	ELXd 242.807	**188550**	220–240	A1 BAT	10 to 50	max. 70	K4	53.0	100.0
				ELXd 226.801	**188431**	220–240	A1 BAT	10 to 50	max. 70	K3	54.0	100.0
32	TC-TEL	GX24q-3	1 x 32.0	ELXd 142.806	**188565**	220–240	A1 BAT	10 to 50	max. 70	K3	36.0	100.0
2x32	TC-TEL	GX24q-3	2 x 32.0	ELXd 242.807	**188550**	220–240	A1 BAT	10 to 50	max. 70	K4	71.0	100.0
42	TC-TEL	GX24q-4	1 x 43.0	ELXd 142.806	**188565**	220–240	A1 BAT	10 to 50	max. 70	K3	46.0	100.0
2x42	TC-TEL	GX24q-4	2 x 43.0	ELXd 242.807	**188550**	220–240	A1 BAT	10 to 50	max. 70	K4	92.0	100.0
57	TC-TEL	GX24q-5	1 x 57.0	ELXd 170.808	**188276**	220–240	A1 BAT	10 to 55	max. 60	K4+	62.0	100.0
70	TC-TEL	GX24q-6	1 x 70.0	ELXd 170.808	**188276**	220–240	A1 BAT	10 to 55	max. 60	K4+	77.0	100.0

Circuit diagrams see pages 362–365

ELXd – Dimmable 1–10 V for TC-DEL, TC-TEL lamps

Independent electronic ballasts
Casing with cord grip: K3, K4 and
K4+ with venting slits
Control voltage: DC 1–10 V acc. to
EN 60929 with earth leakage current 0.5 mA
(protected if connected to mains voltage)
For use with open- or closed-loop control units
Power factor: 0.98 at 100% operation

DC voltage
for operation: 176–264 V
for ignition: 198–264 V

○ T5 ◉ TC ○ BUILT-IN ◉ 1–10 V
○ T8 ◉ INDEPENDENT ○ DALI/PUSH

Lamp				Electronic ballast							System	
Output W	Type	Base	Power consumption W	Type	**Ref. No.**	Voltage AC 50, 60 Hz V±10%	Energy efficiency	Ambient temperature t_a (°C)	Casing temperature t_c (°C)	Casing	Output W	Luminous factor %
18	TC-DEL/-TEL	G24q-2/GX24q-2	1 x 16.5	ELXd 118.802	**188694**	220 - 240	A1 BAT	5 to 55	max. 70	K3	21.0	100.0
2x18	TC-DEL/-TEL	G24q-2/GX24q-2	2 x 16.5	ELXd 218.803	**188696**	220 - 240	A1 BAT	5 to 55	max. 70	K4	38.0	100.0
26	TC-DEL/-TEL	G24q-3/GX24q-3	1 x 24.0	ELXd 142.806	**188695**	220 - 240	A1 BAT	10 to 50	max. 70	K3	27.0	100.0
2x26	TC-DEL/-TEL	G24q-3/GX24q-3	2 x 24.0	ELXd 242.807	**188697**	220 - 240	A1 BAT	10 to 50	max. 70	K4	53.0	100.0
				ELXd 226.801	**188490**	220 - 240	A1 BAT	10 to 50	max. 70	K3	54.0	100.0
32	TC-TEL	GX24q-3	1 x 32.0	ELXd 142.806	**188695**	220 - 240	A1 BAT	10 to 50	max. 70	K3	36.0	100.0
2x32	TC-TEL	GX24q-3	2 x 32.0	ELXd 242.807	**188697**	220 - 240	A1 BAT	10 to 50	max. 70	K4	71.0	100.0
42	TC-TEL	GX24q-4	1 x 43.0	ELXd 142.806	**188695**	220 - 240	A1 BAT	10 to 50	max. 70	K3	46.0	100.0
2x42	TC-TEL	GX24q-4	2 x 43.0	ELXd 242.807	**188697**	220 - 240	A1 BAT	10 to 50	max. 70	K4	92.0	100.0
57	TC-TEL	GX24q-5	1 x 57.0	ELXd 170.808	**188495**	220 - 240	A1 BAT	10 to 55	max. 60	K4+	62.0	100.0
70	TC-TEL	GX24q-6	1 x 70.0	ELXd 170.808	**188495**	220 - 240	A1 BAT	10 to 55	max. 60	K4+	77.0	100.0

Circuit diagrams see pages 362–365

ELXd – Dimmable with push key or DALI for TC-DEL, TC-TEL lamps

Electronic built-in ballasts
PUSH: dimmable with usual push key and sensor
DALI: poles are not polarity sensitive (protected if connected to mains voltage) for use with DALI compatible control units
Automatic restart after lamp has been changed
Power factor: > 0.95 at 100% operation
DC voltage
for operation: 176–264 V
for ignition: 198–264 V
standby power consumption: ≤ 0.5 W
Complete implementation of the DALI-standard: addressable, memory store for scenes and groups, revertive information communication, physical and RND-selection, standardized lamp characteristic
Low-power design ensures very low standby power consumption
Compatible with IEC 62386

○ **T5** ◉ **TC** ◉ **BUILT-IN** ○ **1–10 V**
○ **T8** ○ **INDEPENDENT** ◉ **DALI/PUSH**

Lamp				Electronic ballast							System	
Output W	Type	Base	Power consumption W	Type	**Ref. No.**	Voltage AC 50, 60 Hz V±10%	Energy efficiency	Ambient temperature t_a (°C)	Casing temperature t_c (°C)	Casing	Output W	Luminous factor %
14	TC-TEL	GR14q-1	1 x 16.7	ELXd 117.715	**188864**	220–240	A1 BAT	10 to 50	max. 65	K2	18.0	103.8
2x14	TC-TEL	GR14q-1	2 x 14.0	ELXd 217.717	**188866**	220–240	A1 BAT	10 to 60	max. 70	K3	33.8	95.9
17	TC-TEL	GR14q-1	1 x 20.0	ELXd 117.715	**188864**	220–240	A1 BAT	10 to 50	max. 65	K2	22.0	105.3
2x17	TC-TEL	GR14q-1	2 x 17.0	ELXd 217.717	**188866**	220–240	A1 BAT	10 to 60	max. 70	K3	40.7	95.2
new 18	TC-DEL/-TEL	G24q-2/GX24q-2	1 x 16.5	ELXd 118.705	**188952**	220–240	A1 BAT	10 to 50	max. 65	K2	20.2	105.5
new 2x18	TC-DEL/-TEL	G24q-2/GX24q-2	2 x 18.0	ELXd 218.707	**188954**	220–240	A1 BAT	10 to 50	max. 70	K3	40.0	100.1
26	TC-DEL/-TEL	G24q-3/GX24q-3	1 x 25.0	ELXd 142.709	**188923**	220–240	A1 BAT	10 to 50	max. 65	K2	27.5	106.8
new 2x26	TC-DEL/-TEL	G24q-3/GX24q-3	2 x 24.0	ELXd 242.711	**188974**	220–240	A1 BAT	10 to 50	max. 70	K3	56.0	97.9
32	TC-TEL	GX24q-3	1 x 32.0	ELXd 142.709	**188923**	220–240	A1 BAT	10 to 50	max. 65	K2	34.5	106.3
new 2x32	TC-TEL	GX24q-3	2 x 32.0	ELXd 242.711	**188974**	220–240	A1 BAT	10 to 50	max. 70	K3	69.0	97.6
42	TC-TEL	GX24q-4	1 x 42.0	ELXd 142.709	**188923**	220–240	A1 BAT	10 to 50	max. 65	K2	45.0	103.8
new 2x42	TC-TEL	GX24q-4	2 x 42.0	ELXd 242.711	**188974**	220–240	A1 BAT	10 to 50	max. 70	K3	90.0	99.1

Circuit diagrams see pages 362–365

ELXd – Dimmable with push key or DALI for TC-DEL, TC-TEL lamps

Independent electronic ballasts
PUSH: dimmable with usual push key and sensor
DALI: poles are not polarity sensitive (protected if connected to mains voltage) for use with DALI compatible control units
Automatic restart after lamp has been changed
Power factor: > 0.95 at 100% operation
DC voltage
for operation: 176–264 V
for ignition: 198–264 V
standby power consumption: ≤ 0.5 W
Complete implementation of the DALI-standard: addressable, memory store for scenes and groups, revertive information communication, physical and RND-selection, standardized lamp characteristic
Low-power design ensures very low standby power consumption
Compatible with IEC 62386

○ T5 ● TC ○ BUILT-IN ○ 1–10 V
○ T8 ● INDEPENDENT ● DALI/PUSH

	Lamp				Electronic ballast							System	
	Output W	Type	Base	Power consumption W	Type	**Ref. No.**	Voltage AC 50, 60 Hz V±10%	Energy efficiency	Ambient temperature t_a (°C)	Casing temperature t_c (°C)	Casing	Output W	Luminous factor %
	14	TC-TEL	GR14q-1	1 x 16.7	ELXd 117.715	**188865**	220–240	A1BAT	10 to 50	max. 65	K2	18.0	103.8
	2x14	TC-TEL	GR14q-1	2 x 14.0	ELXd 217.717	**188867**	220–240	A1BAT	10 to 60	max. 70	K3	33.8	95.9
	17	TC-TEL	GR14q-1	1 x 20.0	ELXd 117.715	**188865**	220–240	A1BAT	10 to 50	max. 65	K2	22.0	105.3
	2x17	TC-TEL	GR14q-1	2 x 17.0	ELXd 217.717	**188867**	220–240	A1BAT	10 to 60	max. 70	K3	40.7	95.2
new	18	TC-DEL/-TEL	G24q-2/GX24q-2	1 x 16.5	ELXd 118.705	**188953**	220–240	A1BAT	10 to 50	max. 65	K2	20.2	105.5
new	2x18	TC-DEL/-TEL	G24q-2/GX24q-2	2 x 18.0	ELXd 218.707	**188955**	220–240	A1BAT	10 to 60	max. 70	K3	40.0	100.1
	26	TC-DEL/-TEL	G24q-3/GX24q-3	1 x 25.0	ELXd 142.709	**188924**	220–240	A1BAT	10 to 50	max. 65	K2	27.5	106.3
new	2x26	TC-DEL/-TEL	G24q-3/GX24q-3	2 x 24.0	ELXd 242.711	**188975**	220–240	A1BAT	10 to 50	max. 70	K3	56.0	97.9
	32	TC-TEL	GX24q-3	1 x 32.0	ELXd 142.709	**188924**	220–240	A1BAT	10 to 50	max. 65	K2	34.8	106.3
new	2x32	TC-TEL	GX24q-3	2 x 32.0	ELXd 242.711	**188975**	220–240	A1BAT	10 to 50	max. 70	K3	69.0	97.6
	42	TC-TEL	GX24q-4	1 x 42.0	ELXd 142.709	**188924**	220–240	A1BAT	10 to 50	max. 65	K2	45.0	103.8
new	2x42	TC-TEL	GX24q-4	2 x 42.0	ELXd 242.711	**188975**	220–240	A1BAT	10 to 50	max. 70	K3	90.0	99.1

Circuit diagrams see pages 362–365

ELXs – Warm Start for T5 and T8 Lamps

Electronic built-in ballasts
Casing: heat-resistant polyamide
Power factor: approx. 0.6
(depending on the lamp output)
DC voltage operation: 198–264 V
Push-in terminals with push-button: 0.5–1.5 mm²
RFI-suppressed
For luminaires of protection class I and II
Degree of protection: IP20
Fixing slots for screws M4
For lighting systems with
high switching frequency (> 5/day)
EOL shut down approved
acc. to EN 61347 Test 2

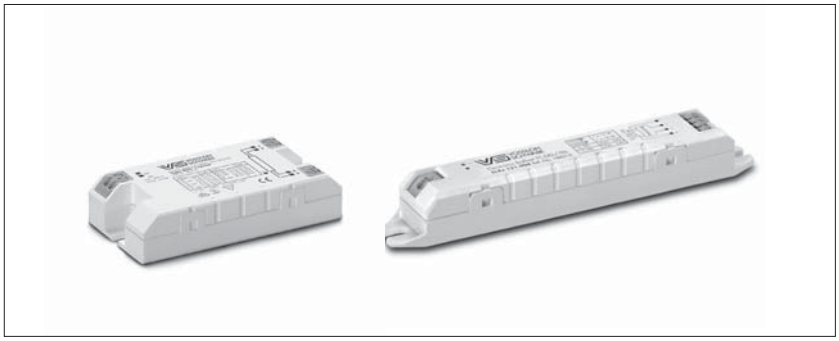

K20

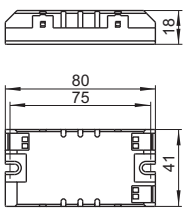

K21

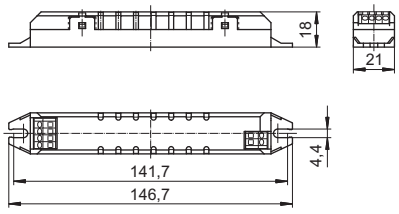

● T5 ○ TC ● BUILT-IN ○ 1–10 V
● T8 ○ INDEPENDENT ○ DALI/PUSH

Lamp				Electronic ballast							System
Output W	Type	Base	Power consumption W	Type	**Ref. No.**	Voltage AC 50, 60 Hz V±10%	Energy efficiency	Ambient temperature t_a (°C)	Casing temperature t_c (°C)	Casing	Output W
4	T5	G5	1 x 4.6	ELXs 116.900	**188661**	220–240	A3	-15 to 55	max. 75	K20	5.9
			1 x 4.6	ELXs 116.903	**188662**	220–240	A3	-15 to 55	max. 75	K21	5.9
6	T5	G5	1 x 6.0	ELXs 116.900	**188661**	220–240	A2	-15 to 55	max. 75	K20	7.5
			1 x 6.0	ELXs 116.903	**188662**	220–240	A2	-15 to 55	max. 75	K21	7.5
8	T5	G5	1 x 7.1	ELXs 116.900	**188661**	220–240	A2	-15 to 55	max. 75	K20	8.6
			1 x 7.1	ELXs 116.903	**188662**	220–240	A2	-15 to 55	max. 75	K21	8.6
13	T5	G5	1 x 12.0	ELXs 116.900	**188661**	220–240	A2	-15 to 55	max. 75	K20	13.1
			1 x 12.0	ELXs 116.903	**188662**	220–240	A2	-15 to 55	max. 75	K21	13.1
14	T5	G5	1 x 14.1	ELXs 121.901	**188663**	220–240	A2	-15 to 55	max. 80	K20	16.3
			1 x 14.1	ELXs 121.904	**188664**	220–240	A2	-15 to 55	max. 80	K21	16.3
	T8	G13	1 x 13.5	ELXs 124.902	**188665**	220–240	A2	-15 to 55	max. 85	K20	16.2
			1 x 13.5	ELXs 124.905	**188666**	220–240	A2	-15 to 55	max. 85	K21	16.2
15	T8	G13	1 x 14.1	ELXs 124.902	**188665**	220–240	A2	-15 to 55	max. 85	K20	17.6
			1 x 14.1	ELXs 124.905	**188666**	220–240	A2	-15 to 55	max. 85	K21	17.6
16	T8	G13	1 x 12.0	ELXs 116.900	**188661**	220–240	A2	-15 to 55	max. 75	K20	13.4
			1 x 12.0	ELXs 116.903	**188662**	220–240	A2	-15 to 55	max. 75	K21	13.4
18	T8	G13	1 x 15.9	ELXs 124.902	**188665**	220–240	A2	-15 to 55	max. 85	K20	18.5
			1 x 15.9	ELXs 124.905	**188666**	220–240	A2	-15 to 55	max. 85	K21	18.5
21	T5	G5	1 x 19.1	ELXs 121.901	**188663**	220–240	A2	-15 to 55	max. 80	K20	21.8
			1 x 19.1	ELXs 121.904	**188664**	220–240	A2	-15 to 55	max. 80	K21	21.8
24	T5	G5	1 x 20.1	ELXs 124.902	**188665**	220–240	A2	-15 to 55	max. 85	K20	21.5
			1 x 20.1	ELXs 124.905	**188666**	220–240	A2	-15 to 55	max. 85	K21	21.5

Circuit diagrams see pages 362–365

ELXc – Warm Start for T5 and T8 Lamps

Electronic built-in ballasts
Casing: heat-resistant polycarbonate (K9, K10)
or metal (M8, M9, M10, M11, M22, M24)
Power factor: ≥ 0.95
RFI-suppressed
For luminaires of protection class I (metal casing)
For luminaires of protection class I and II
(plastic casing)

Degree of protection: IP20
For lighting systems with
high switching frequency (> 5/day)

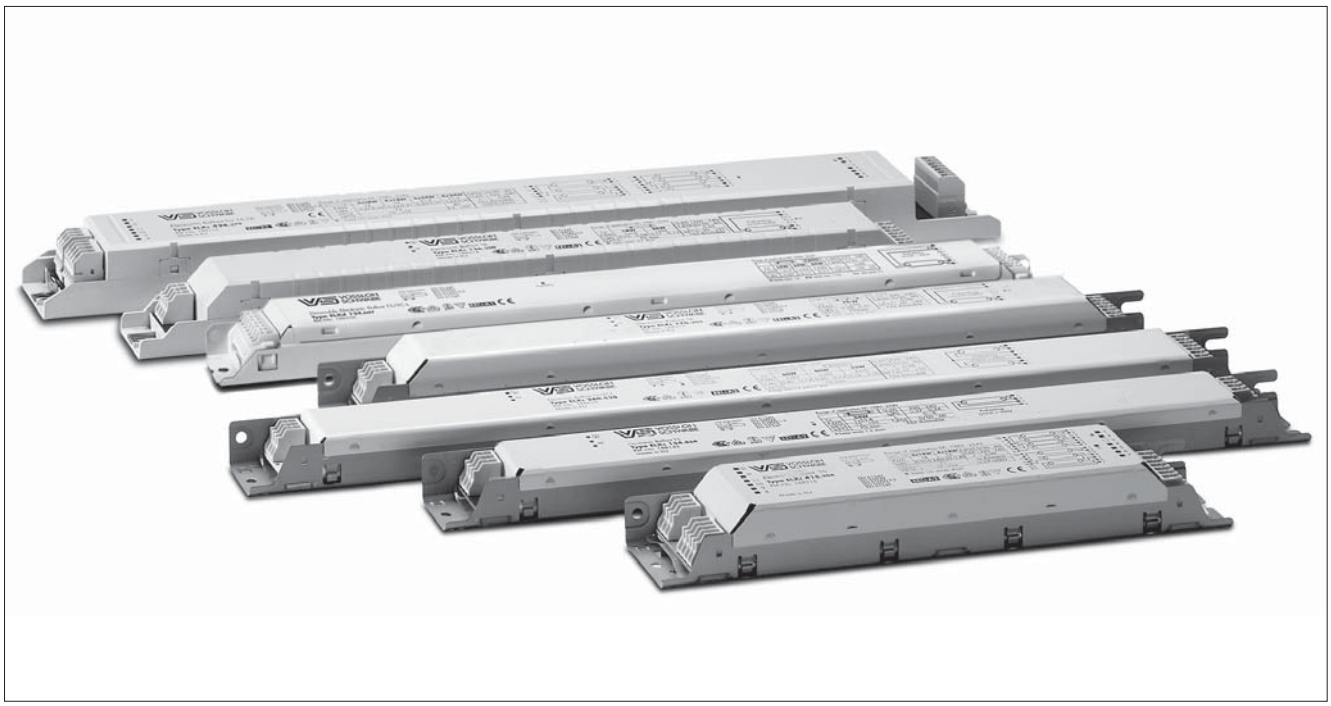

K9

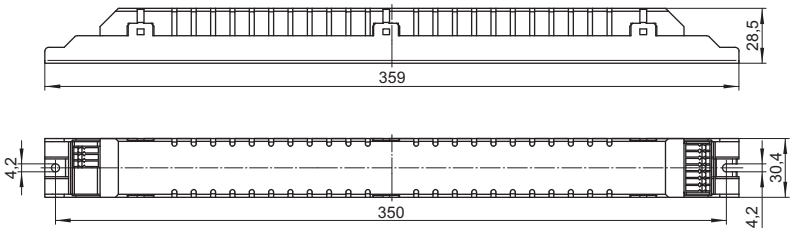

K10

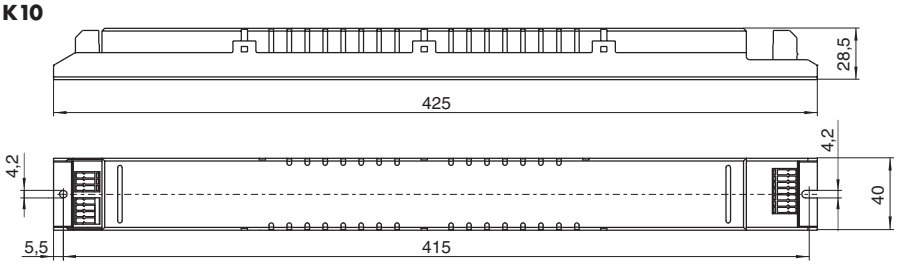

ELXc – Warm Start for T5 and T8 Lamps

M6

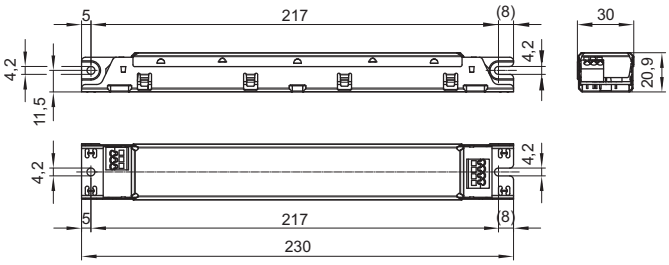

M8

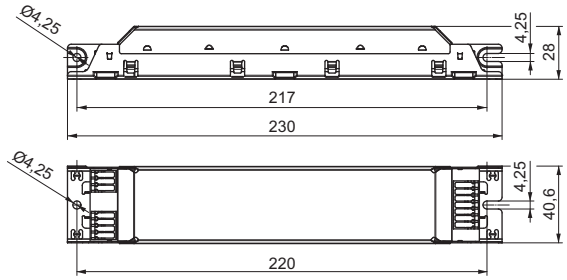

M9

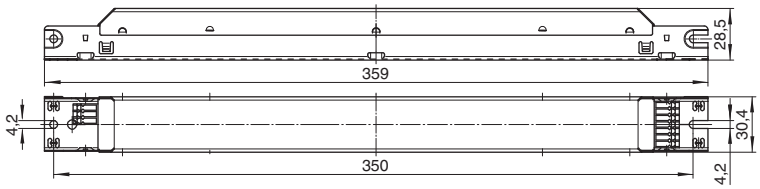

M10/M11

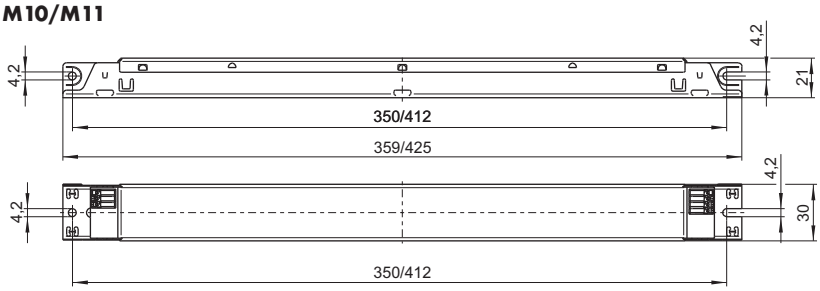

M22/M24

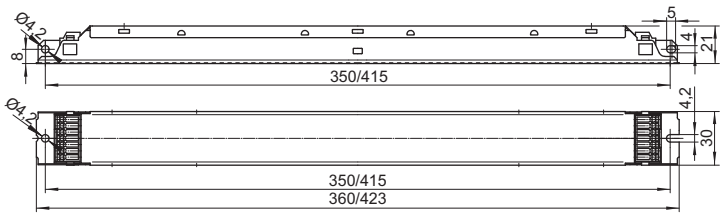

ELXc – Warm start for T5 lamps with automatic lamp detection

DC voltage
for operation: 176–276 V
for ignition: 198–264 V
Push-in terminals: 0.5–1 mm²
For the automatic luminaire wiring:
IDC terminals for leads H05V-U 0.5

EOL shut down approved
acc. to EN 61347 Test 2
Automatic lamp detection (T5 HO/HE)
Optimum pre-heating of the filament ensures lamps can be ignited within 1 second.

◉ **T5** ○ **T8** ○ **TC** ◉ **BUILT-IN** ○ **INDEPENDENT** ○ **1–10 V** ○ **DALI/PUSH**

Lamp				Electronic ballast							System	
Output W	Type	Base	Power consumption W	Type	**Ref. No.**	Voltage AC 50, 60 Hz V±10%	Energy efficiency	Ambient temperature t_a (°C)	Casing temperature t_c (°C)	Casing	Output W	Luminous factor %
14	T5	G5	1 x 14.0	ELXc 139.632	**188945**	220-240	A2 BAT	-20 to 50	max. 75	M22	16.0	100.0
2x14	T5	G5	2 x 14.0	ELXc 239.635	**188948**	220-240	A2 BAT	-20 to 50	max. 75	M22	31.0	100.0
21	T5	G5	1 x 21.0	ELXc 139.632	**188945**	220-240	A2 BAT	-20 to 50	max. 75	M22	24.0	100.0
2x21	T5	G5	2 x 20.5	ELXc 239.635	**188948**	220-240	A2 BAT	-20 to 50	max. 75	M22	45.0	100.0
24	T5	G5	1 x 23.0	ELXc 139.632	**188945**	220-240	A2 BAT	-20 to 50	max. 75	M22	26.0	100.0
2x24	T5	G5	2 x 23.0	ELXc 239.635	**188948**	220-240	A2 BAT	-20 to 50	max. 75	M22	50.0	100.0
28	T5	G5	1 x 28.0	ELXc 154.633	**188946**	220-240	A2 BAT	-20 to 50	max. 75	M22	32.0	100.0
2x28	T5	G5	2 x 28.0	ELXc 254.636	**188949**	220-240	A2 BAT	-20 to 50	max. 75	M22	61.0	100.0
35	T5	G5	1 x 35.0	ELXc 154.633	**188946**	220-240	A2 BAT	-20 to 50	max. 75	M22	38.0	100.0
			1 x 35.0	ELXc 180.634	**188947**	220-240	A2 BAT	-20 to 50	max. 75	M22	38.0	100.0
2x35	T5	G5	2 x 35.0	ELXc 254.636	**188949**	220-240	A2 BAT	-20 to 50	max. 75	M22	76.0	100.0
			2 x 35.0	ELXc 280.637	**188950**	220-240	A2 BAT	-20 to 50	max. 75	M24	75.0	100.0
39	T5	G5	1 x 38.0	ELXc 139.632	**188945**	220-240	A2 BAT	-20 to 50	max. 75	M22	41.0	100.0
2x39	T5	G5	2 x 38.0	ELXc 239.635	**188948**	220-240	A2 BAT	-20 to 50	max. 75	M22	81.0	100.0
49	T5	G5	1 x 49.0	ELXc 154.633	**188946**	220-240	A2 BAT	-20 to 50	max. 75	M22	53.0	100.0
			1 x 49.0	ELXc 180.634	**188947**	220-240	A2 BAT	-20 to 50	max. 75	M22	53.0	100.0
2x49	T5	G5	2 x 49.0	ELXc 254.636	**188949**	220-240	A2 BAT	-20 to 50	max. 75	M22	105.0	100.0
			2 x 49.0	ELXc 280.637	**188950**	220-240	A2 BAT	-20 to 50	max. 75	M24	104.0	100.0
54	T5	G5	1 x 54.0	ELXc 154.633	**188946**	220-240	A2 BAT	-20 to 50	max. 75	M22	58.0	100.0
2x54	T5	G5	2 x 54.0	ELXc 254.636	**188949**	220-240	A2 BAT	-20 to 50	max. 75	M22	115.0	100.0
80	T5	G5	1 x 80.0	ELXc 180.634	**188947**	220-240	A2 BAT	-20 to 50	max. 75	M22	85.0	100.0
2x80	T5	G5	2 x 80.0	ELXc 280.637	**188950**	220-240	A2 BAT	-20 to 50	max. 75	M24	165.0	100.0

Circuit diagrams see pages 362–365

ELXc – Warm start

DC voltage
for operation: 176–264 V
for ignition: 198–264 V
(ELXc 135.856, 235.857, 149.858, 154.864, 180.866, 270.206; 280.538:
DC voltage cannot be reduced to 176 V)
Push-in terminals: 0.5–1 mm²

For the automatic luminaire wiring:
IDC terminals for leads H05V-U 0.5
EOL shut down approved
acc. to EN 61347 Test 2 (for T5)
EOL shut down (for T8)

(●) T5 ( ) TC (●) BUILT-IN ( ) 1–10 V
(●) T8 ( ) INDEPENDENT ( ) DALI/PUSH

Lamp				Electronic ballast							System	
Output W	Type	Base	Power consumption W	Type	**Ref. No.**	Voltage AC 50, 60 Hz V±10%	Energy efficiency	Ambient temperature t_a (°C)	Casing temperature t_c (°C)	Casing	Output W	Luminous factor %
T5 lamps – Casing: M8, M10 and M11												
14	T5	G5	1 x 14.0	ELXc 135.856	**188093**	220–240	A2 BAT	-15 to 55	max. 70	M10	17.0	110.7
2x14	T5	G5	2 x 14.0	ELXc 235.857	**188094**	220–240	A2 BAT	-15 to 55	max. 70	M10	33.4	107.0
3x14	T5	G5	3 x 14.0	ELXc 414.868	**188438**	220–240	A2 BAT	-15 to 55	max. 70	M8	48.0	105.4
4x14	T5	G5	4 x 14.0	ELXc 414.868	**188438**	220–240	A2 BAT	-15 to 55	max. 70	M8	63.0	102.3
21	T5	G5	1 x 21.0	ELXc 135.856	**188093**	220–240	A2 BAT	-15 to 55	max. 70	M10	24.0	107.4
2x21	T5	G5	2 x 21.0	ELXc 235.857	**188094**	220–240	A2 BAT	-15 to 55	max. 70	M10	50.2	110.6
24	T5	G5	1 x 22.5	ELXc 140.862	**188140**	220–240	A2 BAT	-15 to 55	max. 70	M10	27.0	114.0
2x24	T5	G5	2 x 22.5	ELXc 240.863	**188616**	220–240	A2 BAT	-15 to 55	max. 70	M10	51.0	107.4
new 3x24	T5	G5	3 x 21.5	ELXc 424.223	**183039**	220–240	A2 BAT	-15 to 55	max. 75	M8	76.0	98.2
new 4x24	T5	G5	4 x 21.5	ELXc 424.223	**183039**	220–240	A2 BAT	-15 to 50	max. 75	M8	96.5	98.4
28	T5	G5	1 x 28.0	ELXc 135.856	**188093**	220–240	A2 BAT	-15 to 55	max. 70	M10	32.0	104.9
2x28	T5	G5	2 x 28.0	ELXc 235.857	**188094**	220–240	A2 BAT	-15 to 55	max. 70	M10	60.6	106.2
35	T5	G5	1 x 35.0	ELXc 135.856	**188093**	220–240	A2 BAT	-15 to 55	max. 70	M10	39.5	102.7
2x35	T5	G5	2 x 35.0	ELXc 235.857	**188094**	220–240	A2 BAT	-15 to 55	max. 70	M10	74.5	102.5
39	T5	G5	1 x 38.0	ELXc 140.862	**188140**	220–240	A2 BAT	-15 to 55	max. 70	M10	43.0	107.0
2x39	T5	G5	2 x 38.0	ELXc 240.863	**188616**	220–240	A2 BAT	-15 to 55	max. 70	M10	82.0	97.9
49	T5	G5	1 x 49.0	ELXc 149.858	**188095**	220–240	A2 BAT	-15 to 55	max. 70	M10	54.0	102.5
2x49	T5	G5	2 x 49.0	ELXc 249.859	**188617**	220–240	A2 BAT	-15 to 50	max. 70	M10	113.0	106.6
54	T5	G5	1 x 54.0	ELXc 154.864	**188142**	220–240	A2 BAT	-15 to 55	max. 70	M10	59.0	101.1
2x54	T5	G5	2 x 54.0	ELXc 254.865	**188618**	220–240	A2 BAT	-15 to 50	max. 70	M10	119.0	106.0
80	T5	G5	1 x 80.0	ELXc 180.866	**188144**	220–240	A2 BAT	-15 to 55	max. 70	M10	87.0	97.6
2x80	T5	G5	2 x 80.0	ELXc 280.538	**188619**	220–240	A2 BAT	-15 to 50	max. 70	M11	175.0	97.2
T8 lamps – Casing: K9, M8 and M9												
18	T8	G13	1 x 16.0	ELXc 136.200	**188314**	220–240	A2 BAT	-20 to 55	max. 70	K9	19.5	106.0
2x18	T8	G13	2 x 16.0	ELXc 236.202	**188316**	220–240	A2 BAT	-20 to 55	max. 70	K9	38.0	104.3
3x18	T8	G13	3 x 16.0	ELXc 418.204	**188744**	220–240	A2 BAT	-15 to 55	max. 70	M8	56.0	100.8
4x18	T8	G13	4 x 16.0	ELXc 418.204	**188744**	220–240	A2 BAT	-15 to 55	max. 70	M8	71.5	98.9
36	T8	G13	1 x 32.0	ELXc 136.200	**188314**	220–240	A2 BAT	-20 to 55	max. 70	K9	34.5	96.5
2x36	T8	G13	2 x 32.0	ELXc 236.202	**188316**	220–240	A2 BAT	-20 to 55	max. 70	K9	72.0	98.3
3x36	T8	G13	3 x 32.0	ELXc 336.214	**188595**	220–240	A2 BAT	-15 to 50	max. 65	M8	105.0	99.4
58	T8	G13	1 x 50.0	ELXc 158.201	**188315**	220–240	A2 BAT	-20 to 55	max. 70	K9	55.0	100.9
2x58	T8	G13	2 x 50.0	ELXc 258.203	**188317**	220–240	A2 BAT	-20 to 50	max. 75	K9	107.0	101.0
70	T8	G13	1 x 60.0	ELXc 170.205	**188319**	220–240	A2 BAT	-20 to 55	max. 70	M9	67.8	104.3
2x70	T8	G13	2 x 60.0	ELXc 270.206	**188320**	220–240	A2 BAT	-20 to 50	max. 65	M9	131.0	104.3

Circuit diagrams see pages 362–365

new

ELXc EffectLine – Warm start

Warm start for T5 and T8 lamps – Casing: M6, M8 and M10

DC voltage
for operation: 176–264 V
for ignition: 198–264 V
(not possible for T8)
Push-in terminals with push-button: 0.5–1.5 mm²

EOL shut down approved
acc. to EN 61347 Test 2 (for T5)
EOL shut down (for T8)

(●) T5 ( ) TC (●) BUILT-IN ( ) 1–10 V
(●) T8 ( ) INDEPENDENT ( ) DALI/PUSH

	Lamp				Electronic ballast							System	
	Output W	Type	Base	Power consumption W	Type	**Ref. No.**	Voltage AC 50, 60 Hz V±10%	Energy efficiency	Ambient temperature t_a (°C)	Casing temperature t_c (°C)	Casing	Output W	Luminous factor %
	T5 lamps – Casing: M6 and M10												
new	14	T5	G5	1 x 14.3	ELXc 135.220	**188921**	220–240	A2 BAT	-15 to 55	max. 70	M6	17.0	104.8
new	2x14	T5	G5	2 x 14.3	ELXc 235.221	**188922**	220–240	A2 BAT	-15 to 55	max. 70	M10	34.5	101.9
new	21	T5	G5	1 x 20.4	ELXc 135.220	**188921**	220–240	A2 BAT	-15 to 55	max. 70	M6	23.3	106.9
new	2x21	T5	G5	2 x 21.4	ELXc 235.221	**188922**	220–240	A2 BAT	-15 to 55	max. 70	M10	48.3	104.9
new	28	T5	G5	1 x 26.7	ELXc 135.220	**188921**	220–240	A2 BAT	-15 to 55	max. 70	M6	29.9	107.5
new	2x28	T5	G5	2 x 28.7	ELXc 235.221	**188922**	220–240	A2 BAT	-15 to 55	max. 70	M10	62.1	109.0
new	35	T5	G5	1 x 32.6	ELXc 135.220	**188921**	220–240	A2 BAT	-15 to 55	max. 70	M6	36.5	103.0
new	2x35	T5	G5	2 x 35.6	ELXc 235.221	**188922**	220–240	A2 BAT	-15 to 55	max. 70	M10	78.2	100.8
	T8 lamps – Casing: M8												
	18	T8	G13	1 x 16.0	ELXc 136.207	**188704**	220–240	A2 BAT	-20 to 55	max. 60	M8	18.4	105.0
	2x18	T8	G13	2 x 16.0	ELXc 236.208	**188705**	220–240	A2 BAT	-20 to 50	max. 60	M8	35.2	106.0
	36	T8	G13	1 x 32.0	ELXc 136.207	**188704**	220–240	A2 BAT	-20 to 55	max. 60	M8	35.4	97.0
	2x36	T8	G13	2 x 32.0	ELXc 236.208	**188705**	220–240	A2 BAT	-20 to 50	max. 60	M8	69.7	98.0
	58	T8	G13	1 x 50.0	ELXc 158.209	**188706**	220–240	A2 BAT	-20 to 50	max. 60	M8	52.6	106.0
	2x58	T8	G13	2 x 50.0	ELXc 258.210	**188707**	220–240	A2	-20 to 50	max. 65	M8	109.9	105.0

Circuit diagrams see pages 362–365

Warm start for T8 lamps – Casing: M8

For the automatic luminaire wiring:
IDC terminals for leads H05V-U 0.5
EOL shut down

( ) T5 ( ) TC (●) BUILT-IN ( ) 1–10 V
(●) T8 ( ) INDEPENDENT ( ) DALI/PUSH

Lamp				Electronic ballast							System	
Output W	Type	Base	Power consumption W	Type	**Ref. No.**	Voltage AC 50, 60 Hz V±10%	Energy efficiency	Ambient temperature t_a (°C)	Casing temperature t_c (°C)	Casing	Output W	Luminous factor %
18	T8	G13	1 x 16.0	ELXc 136.207	**188708**	220–240	A2 BAT	-20 to 55	max. 60	M8	18.4	105.0
2x18	T8	G13	2 x 16.0	ELXc 236.208	**188709**	220–240	A2 BAT	-20 to 50	max. 60	M8	35.2	106.0
36	T8	G13	1 x 32.0	ELXc 136.207	**188708**	220–240	A2 BAT	-20 to 55	max. 60	M8	35.4	97.0
2x36	T8	G13	2 x 32.0	ELXc 236.208	**188709**	220–240	A2 BAT	-20 to 50	max. 60	M8	69.7	98.0
58	T8	G13	1 x 50.0	ELXc 158.209	**188710**	220–240	A2 BAT	-20 to 50	max. 60	M8	52.6	106.0
2x58	T8	G13	2 x 50.0	ELXc 258.210	**188711**	220–240	A2	-20 to 50	max. 65	M8	109.9	105.0

Circuit diagrams see pages 362–365

ELXc EffectLine II – Warm start

Warm start for T8 lamps – Casing: M8

DC voltage
for operation: 176–264 V
(DC voltage can be reduced to 176 V for 2 hours)
for ignition: 198–264 V
IDC terminals: 0.5–1 mm²
For the automatic luminaire wiring:
IDC/push-in terminals for leads H05V-U 0.5
EOL 2 shut down

◯ T5 ◯ TC ◉ BUILT-IN ◯ 1–10 V
◉ T8 ◯ INDEPENDENT ◯ DALI/PUSH

Lamp				Electronic ballast							System	
Output W	Type	Base	Power consumption W	Type	**Ref. No.**	Voltage AC 50, 60 Hz V±10%	Energy efficiency	Ambient temperature t_a (°C)	Casing temperature t_c (°C)	Casing	Output W	Luminous factor %
18	T8	G13	1 x 16.0	ELXc 136.216	**188868**	220–240	A2 BAT	–20 to 55	max. 65	M8	19.8	105.7
2x18	T8	G13	2 x 16.0	ELXc 236.217	**188869**	220–240	A2 BAT	–20 to 60	max. 70	M8	38.0	101.6
36	T8	G13	1 x 32.0	ELXc 136.216	**188868**	220–240	A2 BAT	–20 to 55	max. 65	M8	34.4	97.5
2x36	T8	G13	2 x 32.0	ELXc 236.217	**188869**	220–240	A2 BAT	–20 to 60	max. 70	M8	71.9	110.6
58	T8	G13	1 x 50.0	ELXc 158.218	**188870**	220–240	A2 BAT	–20 to 60	max. 65	M8	56.0	100.8
2x58	T8	G13	2 x 50.0	ELXc 258.219	**188871**	220–240	A2	–20 to 55	max. 70	M8	110.0	101.0

Circuit diagrams see pages 362–365

Warm start for T8 lamps – Casing: M8

DC voltage
for operation: 176–264 V
(DC voltage can be reduced to 176 V for 2 hours)
for ignition: 198–264 V
Push-in terminals with push-button: 0.5–1.5 mm²
EOL 2 shut down

◯ T5 ◯ TC ◉ BUILT-IN ◯ 1–10 V
◉ T8 ◉ INDEPENDENT ◯ DALI/PUSH

Lamp				Electronic ballast							System	
Output W	Type	Base	Power consumption W	Type	**Ref. No.**	Voltage AC 50, 60 Hz V±10%	Energy efficiency	Ambient temperature t_a (°C)	Casing temperature t_c (°C)	Casing	Output W	Luminous factor %
18	T8	G13	1 x 16.0	ELXc 136.216	**188912**	220–240	A2 BAT	–20 to 55	max. 65	M8	19.8	105.7
2x18	T8	G13	2 x 16.0	ELXc 136.217	**188913**	220–240	A2 BAT	–20 to 60	max. 60	M8	38.0	101.6
36	T8	G13	1 x 32.0	ELXc 136.216	**188912**	220–240	A2 BAT	–20 to 55	max. 65	M8	34.4	97.5
2x36	T8	G13	2 x 32.0	ELXc 236.217	**188913**	220–240	A2 BAT	–20 to 60	max. 70	M8	71.9	110.6
58	T8	G13	1 x 50.0	ELXc 158.218	**188914**	220–240	A2 BAT	–20 to 60	max. 65	M8	56.0	100.8
2x58	T8	G13	2 x 50.0	ELXc 258.219	**188915**	220–240	A2	–20 to 50	max. 70	M8	110.0	101.0

Circuit diagrams see pages 362–365

ELXd – Dimmable for T5 and T8 Lamps

Electronic built-in ballasts
Casing: metal
Power factor: ≥ 0.95 at 100% operation
DC voltage
- for operation: 154–276 V (M22, M23, M24)
- for operation: 176–264 V (M9)
- for ignition: 198–264 V

For the automatic luminaire wiring:
IDC terminals for leads H05V-U 0.5
RFI-suppressed
For luminaires of protection class I
Degree of protection: IP20
For lighting systems with
high switching frequency (> 5/day)
Suitable for use in luminaires for emergency lighting systems acc. to VDE 0108

M9

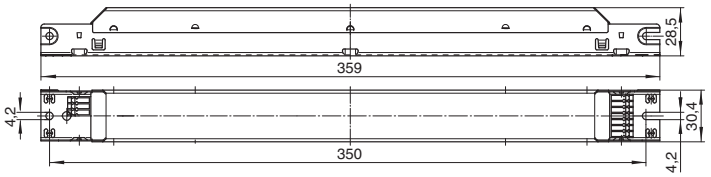

M10

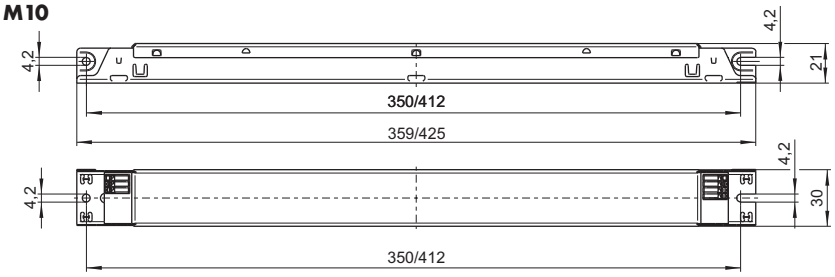

M23

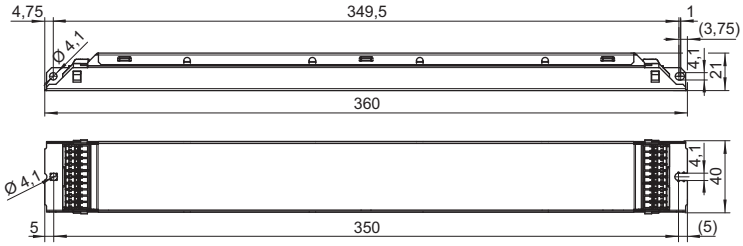

M22/M24

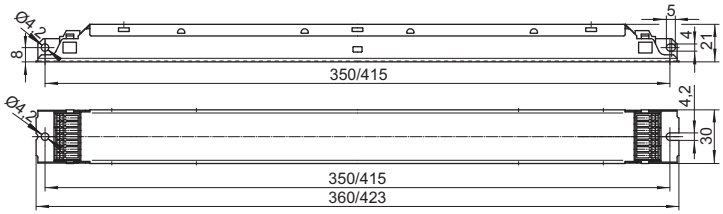



ELXd – Dimmable 1–10 V

Dimming range:
approx. 1–100% of lamp power
Control voltage: DC 1–10 V acc. to EN 60929
with earth leakage current 0.6 mA
(protected if connected to mains voltage)

For use with open- or closed-loop control units
Push-in terminals: 0.5–1 mm²
EOL shut down approved
acc. to EN 61347 Test 2 (for T5)
EOL 2 shut down (for T8)

(●) **T5** ( ) **TC** (●) **BUILT-IN** (●) **1–10 V**
(●) **T8** ( ) **INDEPENDENT** ( ) **DALI/PUSH**

Lamp				Electronic ballast							System	
Output W	Type	Base	Power consumption W	Type	**Ref. No.**	Voltage AC 50, 60 Hz V±10%	Energy efficiency	Ambient temperature t_a (°C)	Casing temperature t_c (°C)	Casing	Output W	Luminous factor %
T5 lamps – Casing: M10, M22, M23 and M24												
14	T5	G5	1 x 14.0	ELXd 135.823	**188717**	220–240	A1 BAT	10 to 55	max. 65	M10	17.0	99.5
				ELXd 124.607	**188336**	220–240	A1 BAT	10 to 50	max. 75	M22	16.0	100.0
2x14	T5	G5	2 x 14.0	ELXd 224.608	**188337**	220–240	A1 BAT	10 to 50	max. 75	M24	31.0	100.0
3x14	T5	G5	3 x 14.0	ELXd 324.623	**188597**	220–240	A1 BAT	10 to 50	max. 75	M23	45.3	100.0
4x14	T5	G5	4 x 14.0	ELXd 424.624	**188598**	220–240	A1 BAT	10 to 50	max. 75	M23	60.4	100.0
21	T5	G5	1 x 21.0	ELXd 135.823	**188717**	220–240	A1 BAT	10 to 55	max. 65	M10	24.0	99.0
				ELXd 139.609	**188338**	220–240	A1 BAT	10 to 50	max. 75	M22	23.0	100.0
2x21	T5	G5	2 x 21.0	ELXd 239.610	**188339**	220–240	A1 BAT	10 to 50	max. 75	M24	45.0	100.0
24	T5	G5	1 x 23.0	ELXd 124.607	**188336**	220–240	A1 BAT	10 to 50	max. 75	M22	26.0	100.0
2x24	T5	G5	2 x 23.0	ELXd 224.608	**188337**	220–240	A1 BAT	10 to 50	max. 75	M24	50.0	100.0
3x24	T5	G5	3 x 23.0	ELXd 324.623	**188597**	220–240	A1 BAT	10 to 50	max. 75	M23	73.4	100.0
4x24	T5	G5	4 x 23.0	ELXd 424.624	**188598**	220–240	A1 BAT	10 to 50	max. 75	M23	97.6	100.0
28	T5	G5	1 x 28.0	ELXd 135.823	**188717**	220–240	A1 BAT	10 to 55	max. 65	M10	32.0	98.6
				ELXd 154.611	**188340**	220–240	A1 BAT	10 to 50	max. 75	M22	31.0	100.0
2x28	T5	G5	2 x 28.0	ELXd 254.612	**188341**	220–240	A1 BAT	10 to 50	max. 75	M24	61.0	100.0
35	T5	G5	1 x 35,0	ELXd 135.823	**188717**	220–240	A1 BAT	10 to 55	max. 65	M10	38,0	95.0
				ELXd 180.613	**188342**	220–240	A1 BAT	10 to 50	max. 75	M22	38.0	100.0
2x35	T5	G5	2 x 35.0	ELXd 249.614	**188343**	220–240	A1 BAT	10 to 50	max. 75	M24	75.0	100.0
				ELXd 280.630	**188604**	220–240	A1 BAT	10 to 50	max. 75	M24	75.0	100.0
39	T5	G5	1 x 38.0	ELXd 139.609	**188338**	220–240	A1 BAT	10 to 50	max. 75	M22	42.0	100.0
2x39	T5	G5	2 x 38.0	ELXd 239.610	**188339**	220–240	A1 BAT	10 to 50	max. 75	M24	82.0	100.0
49	T5	G5	1 x 49.0	ELXd 180.613	**188342**	220–240	A1 BAT	10 to 50	max. 75	M22	54.0	100.0
2x49	T5	G5	2 x 49.0	ELXd 249.614	**188343**	220–240	A1 BAT	10 to 50	max. 75	M24	104.0	100.0
				ELXd 280.630	**188604**	220–240	A1 BAT	10 to 50	max. 75	M24	104.0	100.0
54	T5	G5	1 x 54.0	ELXd 154.611	**188340**	220–240	A1 BAT	10 to 50	max. 75	M22	59.0	100.0
2x54	T5	G5	2 x 54.0	ELXd 254.612	**188341**	220–240	A1 BAT	10 to 50	max. 75	M24	115.0	100.0
80	T5	G5	1 x 80.0	ELXd 180.613	**188342**	220–240	A1 BAT	10 to 50	max. 75	M22	88.0	100.0
2x80	T5	G5	2 x 80.0	ELXd 280.630	**188604**	220–240	A1 BAT	10 to 50	max. 75	M24	165.0	100.0
T8 lamps – Casing: M9 and M23												
18	T8	G13	1 x 16.0	ELXd 118.718	**188873**	220–240	EEI=A1	10 to 50	max. 70	M9	21.0	102.1
2x18	T8	G13	2 x 16.0	ELXd 218.719	**188874**	220–240	EEI=A1	10 to 50	max. 70	M9	41.5	104.6
3x18	T8	G13	3 x 16.0	ELXd 318.622	**188596**	220–240	A1 BAT	-20 to 50	max. 75	M23	53.6	100.0
4x18	T8	G13	4 x 16.0	ELXd 418.625	**188599**	220–240	A1 BAT	-20 to 50	max. 75	M23	69.3	100.0
36	T8	G13	1 x 32.0	ELXd 136.720	**188875**	220–240	A1 BAT	10 to 50	max. 70	M9	37.3	101.6
2x36	T8	G13	2 x 32.0	ELXd 236.721	**188876**	220–240	EEI=A1	10 to 50	max. 70	M9	72.0	98.9
58	T8	G13	1 x 50.0	ELXd 158.722	**188877**	220–240	EEI=A1	10 to 50	max. 70	M9	55.0	101.3
2x58	T8	G13	2 x 50.0	ELXd 258.723	**188878**	220–240	EEI=A1	10 to 50	max. 75	M9	109.0	96.5

Circuit diagrams see pages 362–365

ELXd – Dimmable with push key or DALI

Dimming range:
approx. 1–100% of lamp power
PUSH: dimmable with usual push key
DALI: poles are not polarity sensitive
(protected if connected to mains voltage)
for use with DALI compatible control units
Push-in terminals: 0.5–1 mm²
EOL shut down approved
acc. to EN 61347 Test 2 (for T5)
EOL 2 shut down (for T8)
standby power consumption: ≤ 0.2 W

Complete implementation of the DALI-standard:
addressable, memory store for scenes and groups,
revertive information communication, physical and
RND-selection, standardized lamp characteristic
Low-power design ensures very low standby
power consumption
Compatible with IEC 62386

◉ **T5** ○ **TC** ◉ **BUILT-IN** ○ **1–10 V**
◉ **T8** ○ **INDEPENDENT** ◉ **DALI/PUSH**

Lamp				Electronic ballast							System	
Output W	Type	Base	Power consumption W	Type	**Ref. No.**	Voltage AC 50, 60 Hz V±10%	Energy efficiency	Ambient temperature t_a (°C)	Casing temperature t_c (°C)	Casing	Output W	Luminous factor %
T5 lamps – Casing: M22, M23 and M24												
14	T5	G5	1 x 14.0	ELXd 124.600	**188329**	220–240	A1 BAT	10 to 50	max. 75	M22	16.0	100.0
2x14	T5	G5	2 x 14.0	ELXd 224.601	**188330**	220–240	A1 BAT	10 to 50	max. 75	M24	31.0	100.0
3x14	T5	G5	3 x 14.0	ELXd 324.626	**188600**	220–240	A1 BAT	10 to 50	max. 75	M23	45.3	100.0
4x14	T5	G5	4 x 14.0	ELXd 424.628	**188602**	220–240	A1 BAT	10 to 50	max. 75	M23	60.4	100.0
21	T5	G5	1 x 21.0	ELXd 139.602	**188331**	220–240	A1 BAT	10 to 50	max. 75	M22	23.0	100.0
2x21	T5	G5	2 x 21.0	ELXd 239.621	**188350**	220–240	A1 BAT	10 to 50	max. 75	M24	45.0	100.0
24	T5	G5	1 x 23.0	ELXd 124.600	**188329**	220–240	A1 BAT	10 to 50	max. 75	M22	26.0	100.0
2x24	T5	G5	2 x 23.0	ELXd 224.601	**188330**	220–240	A1 BAT	10 to 50	max. 75	M24	50.0	100.0
3x24	T5	G5	3 x 23.0	ELXd 324.626	**188600**	220–240	A1 BAT	10 to 50	max. 75	M23	73.4	100.0
4x24	T5	G5	4 x 23.0	ELXd 424.628	**188602**	220–240	A1 BAT	10 to 50	max. 75	M23	97.6	100.0
28	T5	G5	1 x 28.0	ELXd 154.603	**188332**	220–240	A1 BAT	10 to 50	max. 75	M22	31.0	100.0
2x28	T5	G5	2 x 28.0	ELXd 254.604	**188333**	220–240	A1 BAT	10 to 50	max. 75	M24	61.0	100.0
35	T5	G5	1 x 35.0	ELXd 180.605	**188334**	220–240	A1 BAT	10 to 50	max. 75	M22	38.0	100.0
2x35	T5	G5	2 x 35.0	ELXd 249.606	**188335**	220–240	A1 BAT	10 to 50	max. 75	M24	75.0	100.0
39	T5	G5	1 x 38.0	ELXd 139.602	**188331**	220–240	A1 BAT	10 to 50	max. 75	M22	42.0	100.0
2x39	T5	G5	2 x 38.0	ELXd 239.621	**188350**	220–240	A1 BAT	10 to 50	max. 75	M24	82.0	100.0
49	T5	G5	1 x 49.0	ELXd 180.605	**188334**	220–240	A1 BAT	10 to 50	max. 75	M22	54.0	100.0
2x49	T5	G5	2 x 49.0	ELXd 249.606	**188335**	220–240	A1 BAT	10 to 50	max. 75	M24	104.0	100.0
54	T5	G5	1 x 54.0	ELXd 154.603	**188332**	220–240	A1 BAT	10 to 50	max. 75	M22	59.0	100.0
2x54	T5	G5	2 x 54.0	ELXd 254.604	**188333**	220–240	A1 BAT	10 to 50	max. 75	M24	115.0	100.0
80	T5	G5	1 x 80.0	ELXd 180.605	**188334**	220–240	A1 BAT	10 to 50	max. 75	M22	88.0	100.0
2x80	T5	G5	2 x 80.0	ELXd 280.631	**188605**	220–240	A1 BAT	10 to 50	max. 75	M24	165.0	100.0
T8 lamps – Casing: M22, M23 and M24												
18	T8	G13	1 x 16.0	ELXd 118.615	**188344**	220–240	A1 BAT	-20 to 50	max. 75	M22	19.0	100.0
2x18	T8	G13	2 x 16.0	ELXd 218.616	**188345**	220–240	A1 BAT	-20 to 50	max. 75	M24	37.0	100.0
3x18	T8	G13	1 x 16.0	ELXd 318.627	**188601**	220–240	A1 BAT	-20 to 50	max. 75	M23	53.6	100.0
4x18	T8	G13	2 x 16.0	ELXd 418.629	**188603**	220–240	A1 BAT	-20 to 50	max. 75	M23	69.3	100.0
36	T8	G13	1 x 32.0	ELXd 136.617	**188346**	220–240	A1 BAT	-20 to 50	max. 75	M22	36.0	100.0
2x36	T8	G13	2 x 32.0	ELXd 236.618	**188347**	220–240	A1 BAT	-20 to 50	max. 75	M24	69.0	100.0
58	T8	G13	1 x 50.0	ELXd 158.619	**188348**	220–240	A1 BAT	-20 to 50	max. 75	M22	56.0	100.0
2x58	T8	G13	2 x 50.0	ELXd 258.620	**188349**	220–240	A1 BAT	-20 to 50	max. 75	M24	108.0	100.0

Circuit diagrams see pages 362–365

ELXe – Instant Start for T8 Lamps

Electronic built-in ballasts
Casing: heat-resistant polycarbonate (K9) or metal (M8)
Power factor: 0.98
DC voltage operation: 198–264 V
Push-in terminals: 0.5–1 mm²
For the automatic luminaire wiring: IDC terminals for leads H05V-U 0.5
RFI-suppressed
For luminaires of protection class I and II
Degree of protection: IP20
For lighting systems with low switching frequency (< 5/day)

K9

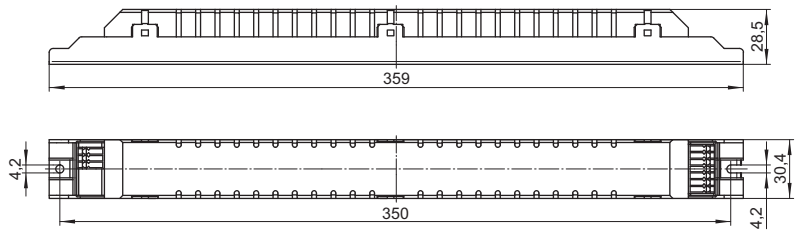

M8

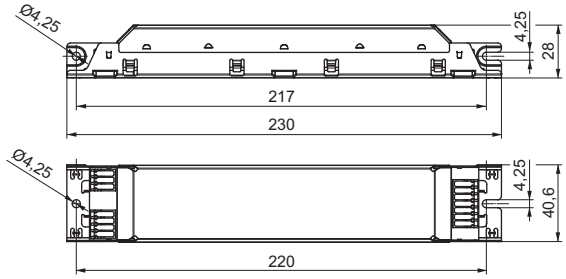

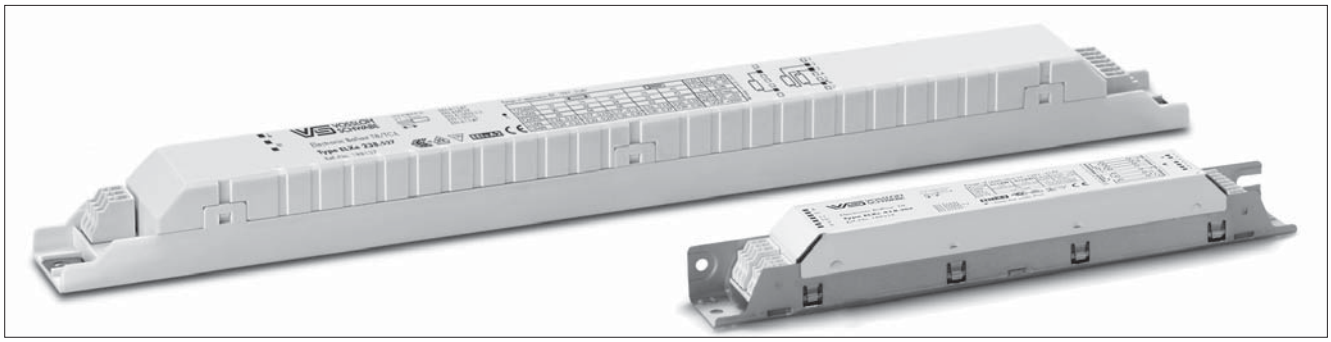

○ T5 ○ TC ● BUILT-IN ○ 1–10 V
● T8 ○ INDEPENDENT ○ DALI/PUSH

Lamp				Electronic ballast							System	
Output W	Type	Base	Power consumption W	Type	**Ref. No.**	Voltage AC 50, 60 Hz V±10%	Energy efficiency	Ambient temperature t_a (°C)	Casing temperature t_c (°C)	Casing	Output W	Luminous factor %
15	T8	G13	1 x 13.0	ELXe 218.526	**188136**	220–240	A2 BAT	-20 to 50	max. 60	K9	14.5	100.0
2x15	T8	G13	2 x 13.0	ELXe 218.526	**188136**	220–240	A2 BAT	-20 to 50	max. 60	K9	29.0	100.0
18	T8	G13	1 x 16.0	ELXe 218.526	**188136**	220–240	A2 BAT	-20 to 50	max. 60	K9	18.0	100.0
2x18	T8	G13	2 x 16.0	ELXe 218.526	**188136**	220–240	A2 BAT	-20 to 50	max. 60	K9	34.0	102.3
4x18	T8	G13	4 x 17.0	ELXe 418.215	**188660**	220–240	A2 BAT	-10 to 55	max. 65	M8	68.0	98.2
30	T8	G13	1 x 30.0	ELXe 238.527	**188137**	220–240	A2	-20 to 50	max. 60	K9	31.0	100.0
2x30	T8	G13	2 x 30.0	ELXe 238.527	**188137**	220–240	A2	-20 to 50	max. 60	K9	62.0	100.0
36	T8	G13	1 x 32.0	ELXe 238.527	**188137**	220–240	A2 BAT	-20 to 50	max. 60	K9	35.0	100.0
2x36	T8	G13	2 x 32.0	ELXe 238.527	**188137**	220–240	A2 BAT	-20 to 50	max. 60	K9	68.5	99.4
38	T8	G13	1 x 34.0	ELXe 238.527	**188137**	220–240	A2 BAT	-20 to 50	max. 60	K9	35.0	100.0
2x38	T8	G13	2 x 34.0	ELXe 238.527	**188137**	220–240	A2 BAT	-20 to 50	max. 60	K9	70.0	101.3
58	T8	G13	1 x 52.0	ELXe 258.222	**188130**	220–240	A2 BAT	-20 to 50	max. 60	K9	54.0	100.0
2x58	T8	G13	2 x 52.0	ELXe 258.222	**188130**	220–240	A2 BAT	-20 to 50	max. 60	K9	108.0	100.0

Circuit diagrams see pages 362–365

Accessories for Dimmable Electronic Ballasts

Manual controller
Dimmer for EB with low-voltage interface 1–10 V
Dimensions: 67x67x51 mm
Push-button change-over switch with stud 4 mm
for installation in flushtype boxes with Ø 55 mm
Max. 50 EBs per dimmer
Weight: 60/30 g, unit: 25 pcs.
Without cover plate
Ref. No.: 172778
Cover plate with rotary knob
Dimensions: 80x80x9 mm
Ref. No.: 172775 white

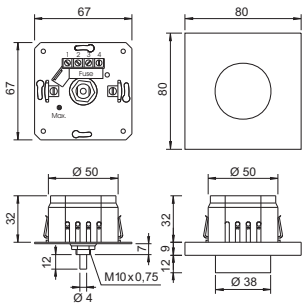



Light sensor
Constant light control with clamp
fastening for fluorescent lamps T8 (T26)
and compact fluorescent lamps
Dimensions: 33.5x40x96 mm
With connection lead: 2x0.24 mm²
Length: 800 mm
Max. 50 EBs per light sensor
Weight: 55 g, unit: 60 pcs.
Ref. No.: 172776

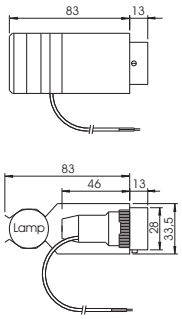

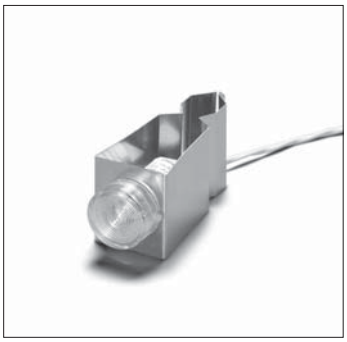

Multi sensor
Dimensions: 58.5x70.5x42 mm
With the sensor the lighting can be kept
on a pre-defined level
With integrated motion detector
Max. 50 EBs per multi sensor
Weight: 125 g, unit: 25 pcs.
Ref. No.: 172777

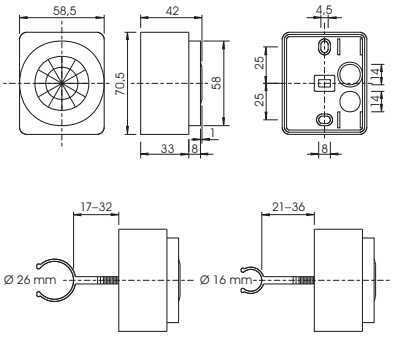



RELIABLE AND DURABLE

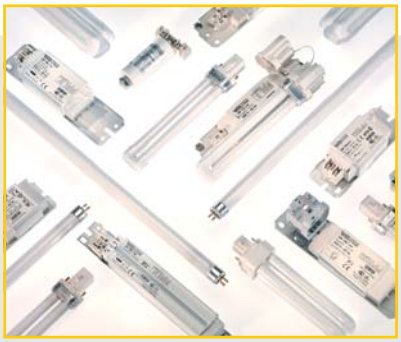



ELECTROMAGNETIC BALLASTS

The following chapter presents Vossloh-Schwabe's broad range of electromagnetic ballasts for compact fluorescent lamps and tubular fluorescent lamps. The variety of available performance properties and shapes satisfies the most diverse design requirements.

Vossloh-Schwabe's electromagnetic ballasts are characterized by extremely tight impedance-value tolerances, which are achieved by individual adjustment of the air gap during the automated production and testing process of the ballasts. This optimises both light output as well as the service life of fluorescent lamps.

4 Electromagnetic Ballasts for TC and T Lamps

Electromagnetic ballasts for compact fluorescent lamps	**260–272**
Standard ballasts	260–264
Super-thin ballasts	265–268
Slim ballasts	269–270
Ballasts 120 V, 60 Hz	271
Operating units 120 V, 60 Hz	272
Electromagnetic ballasts for tubular fluorescent lamps	**273–280**
Standard ballasts	273–275
Super-thin ballasts	276–277
Slim ballasts	277–278
Ballasts 120 V, 60 Hz	279
Operating units 120 V, 60 Hz	280
Technical details for fluorescent lamps	**350–379**
General technical details	533–540
Glossary	541–543

Standard Ballasts
5–16 W, 230 V

For compact fluorescent lamps
Shape: 28 x 41 mm

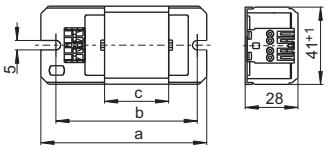



Vacuum-impregnated with polyester resin
Push-in terminal for leads: 0.5–1 mm²
For the automatic luminaire wiring:
IDC terminals for leads H05V-U 0.5
tw 130
Protection class I

Lamp				Ballast									Capacitor	
Output W	Type	Base	Current mA	Type	**Ref. No.**	Voltage V, Hz	a mm	b mm	c mm	Weight kg	$\Delta t/\Delta t_{an.}$ K	Energy efficiency*	C_P µF	Current mA
230 V, 50 Hz														
5	TC-S	G23	180	L 7/9/11.307	**163694**	230, 50	85	75	34	0.32	60/85	B2	2.0	50
2x5	TC-S	G23	180	LN 13.805	**169647**	230, 50	85	75	34	0.32	50/85	B1	2.0	70
				LN 13.313	**163711**	230, 50	85	75	34	0.32	55/80	B2	2.0	70
7	TC-S	G23	175	L 7/9/11.307	**163694**	230, 50	85	75	34	0.32	60/85	B2	2.0	50
2x7	TC-S	G23	160	LN 13.805	**169647**	230, 50	85	75	34	0.32	50/85	B1	2.0	70
				LN 13.313	**163711**	230, 50	85	75	34	0.32	55/80	B2	2.0	70
9	TC-S	G23	170	L 7/9/11.307	**163694**	230, 50	85	75	34	0.32	60/85	B1	2.0	60
2x9	TC-S	G23	140	LN 13.805	**169647**	230, 50	85	75	34	0.32	50/85	B1	2.0	70
				LN 13.313	**163711**	230, 50	85	75	34	0.32	55/80	B2	2.0	80
10	TC-D	G24d-1	190	LN 13.805	**169647**	230, 50	85	75	34	0.32	50/85	B1	2.0	70
				LN 13.313	**163711**	230, 50	85	75	34	0.32	55/80	B2	2.0	70
	TC-DD	GR10q	180	LN 13.805	**169647**	230, 50	85	75	34	0.32	50/85	B1	2.0	70
				LN 13.313	**163711**	230, 50	85	75	34	0.32	55/80	B2	2.0	70
11	TC-S	G23	155	L 7/9/11.307	**163694**	230, 50	85	75	34	0.32	60/85	B1	2.0	80
13	TC-D/TC-T	G24d-1/GX24d-1	175	LN 13.805	**169647**	230, 50	85	75	34	0.32	50/85	B1	2.0	80
				LN 13.313	**163711**	230, 50	85	75	34	0.32	55/80	B2	2.0	80
16	TC-DD	GR8/GR10q	195	LN 16.316	**163730**	230, 50	85	75	34	0.32	60/125	B1	2.0	100

* Energy efficiency: EEI=B2 and EEI=B1, valid until 2017

Standard Ballasts
5–16 W, 240/220 V

For compact fluorescent lamps
Shape: 28 x 41 mm

	Lamp				Ballast									Capacitor	
	Output W	Type	Base	Current mA	Type	**Ref. No.**	Voltage V, Hz	a mm	b mm	c mm	Weight kg	$\Delta t/\Delta t_{an.}$ K	Energy efficiency*	C_P µF	Current mA
	240 V, 50 Hz														
new	5	TC-S	G23	180	L 7/9/11.411	**164335**	240, 50	85	75	34	0.32	60/85	B2	2.0	50
new	2x5	TC-S	G23	180	LN 13.413	**164342**	240, 50	85	75	34	0.32	60/90	B2	2.0	70
new	7	TC-S	G23	175	L 7/9/11.411	**164335**	240, 50	85	75	34	0.32	60/85	B2	2.0	50
new	2x7	TC-S	G23	160	LN 13.413	**164342**	240, 50	85	75	34	0.32	60/90	B2	2.0	70
new	9	TC-S	G23	170	L 7/9/11.411	**164335**	240, 50	85	75	34	0.32	60/85	B1	2.0	60
new	2x9	TC-S	G23	140	LN 13.413	**164342**	240, 50	85	75	34	0.32	60/90	B2	2.0	80
new	10	TC-D	G24d-1	190	LN 13.413	**164342**	240, 50	85	75	34	0.32	60/90	B2	2.0	70
new		TC-DD	GR10q	180	LN 13.413	**164342**	240, 50	85	75	34	0.32	60/90	B2	2.0	70
new	11	TC-S	G23	155	L 7/9/11.411	**164335**	240, 50	85	75	34	0.32	60/85	B1	2.0	80
new	13	TC-D/TC-T	G24d-1/GX24d-1	175	LN 13.413	**164342**	240, 50	85	75	34	0.32	60/90	B1	2.0	80
new	16	TC-DD	GR8/GR10q	195	LN 16.417	**164358**	240, 50	85	75	34	0.32	60/130	B1	2.0	100
	220 V, 60 Hz														
new	5	TC-S	G23	180	L 7/9/11.207	**163305**	220, 60	85	75	34	0.32	35/65	–	2.0	70
new	2x5	TC-S	G23	180	L 13.210	**520992**	220, 60	85	75	34	0.32	45/80	–	2.0	90
new	7	TC-S	G23	175	L 7/9/11.207	**163305**	220, 60	85	75	34	0.32	35/65	–	2.0	70
new	2x7	TC-S	G23	160	L 13.210	**520992**	220, 60	85	75	34	0.32	45/80	–	2.0	90
new	9	TC-S	G23	170	L 7/9/11.207	**163305**	220, 60	85	75	34	0.32	35/65	–	2.0	70
new	2x9	TC-S	G23	140	L 13.210	**520992**	220, 60	85	75	34	0.32	45/80	–	2.0	90
new	10	TC-D	G24d-1	190	L 13.210	**520992**	220, 60	85	75	34	0.32	45/80	–	2.0	80
new		TC-DD	GR10q	180	L 13.210	**520992**	220, 60	85	75	34	0.32	45/80	–	2.0	80
new	11	TC-S	G23	155	L 7/9/11.207	**163305**	220, 60	85	75	34	0.32	35/65	–	2.0	80
new	13	TC-D/TC-T	G24d-1/GX24d-1	165	L 13.210	**520992**	220, 60	85	75	34	0.32	45/80	–	2.0	110

* Energy efficiency: EEI=B2 and EEI=B1, valid until 2017

new

Standard Ballasts 18–58 W, 230 V

For compact fluorescent lamps
Shape: 28 x 41 mm

Vacuum-impregnated with polyester resin
Push-in terminal for leads: 0.5–1 mm²
For the automatic luminaire wiring:
IDC terminals for leads H05V-U 0.5
tw 130
Protection class I

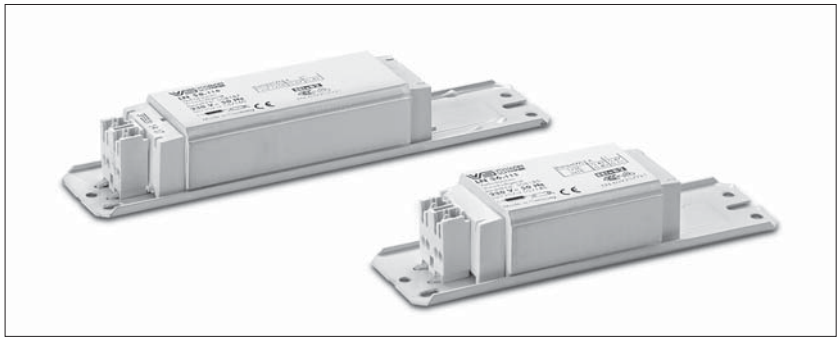

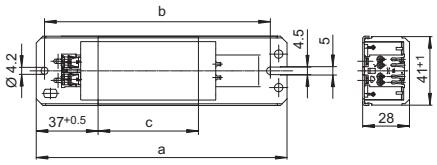

	Lamp				Ballast									Capacitor	
	Output W	Type	Base	Current mA	Type	**Ref. No.**	Voltage V, Hz	a mm	b mm	c mm	Weight kg	$\Delta t/\Delta t_{an.}$ K	Energy efficiency*	C_P µF	Current mA
	230 V, 50 Hz														
	18	TC-D/TC-T	G24d-2/GX24d-2	220	LN 18I.940	**508922**	230, 50	85	75	34	0.32	50/120	B1	2.0	110
					LN 18I.319	**163763**	230, 50	85	75	34	0.32	60/140	B1	2.0	110
		TC-F/TC-L	2G10/2G11	370	LN 18.510	**164572**	230, 50	155	140	92	0.80	40/65	B1	4.5	120
					LN 18.131	**530941**	230, 50	150	140	60	0.55	55/95	B2	4.5	120
					L 18.934**	**534621**	230, 50	150	140	45	0.43	70/150	–	4.5	120
		T-U	2G13	370	LN 18.131	**530941**	230, 50	150	140	60	0.55	55/95	B2	4.5	120
					L 18.934**	**534621**	230, 50	150	140	45	0.43	70/150	–	4.5	120
	2x18	TC-F/TC-L	2G10/2G11	400	LN 2x18.135	**532155**	230, 50	150	140	45	0.43	65	B1	4.0	210
					L 36.334	**530007**	230, 50	150	140	60	0.55	60/155	B1	4.0	210
new	22	T-R	G10q	400	LN 30.530	**164680**	230, 50	155	140	92	0.80	45/65	B2	4.5	200
	24	TC-F/TC-L	2G10/2G11	345	LN 24/26.804	**534490**	230, 50	150	140	60	0.55	55/110	B2	4.5	150
					L 18.934**	**534621**	230, 50	150	140	45	0.43	70/150	–	4.5	150
	26	TC-D/TC-T	G24d-3/GX24d-3	325	LN 18.131	**530941**	230, 50	150	140	60	0.55	55/95	B1	3.5	140
					LN 26.813	**509502**	230, 50	110	100	45	0.41	55/145	B2	3.5	140
					L 18.934**	**534621**	230, 50	150	140	45	0,43	70/150	–	3,5	140
	28	TC-DD	GR8/GR10q	320	LN 18.510	**164572**	230, 50	155	140	92	0.80	40/65	B1	3.5	150
					LN 18.131	**530941**	230, 50	150	140	60	0.55	55/95	B1	3.5	150
					L 18.934**	**534621**	230, 50	150	140	45	0.43	70/150	–	3.5	150
	36	TC-F/TC-L	2G10/2G11	430	LN 36.570	**169779**	230, 50	155	140	92	0.80	35/90	B1	4.5	210
					LN 36.511	**164590**	230, 50	155	140	92	0.80	35/95	B1	4.5	210
new					LN 36.130	**527191**	230, 50	150	140	60	0.55	50/140	B2	4.5	210
					LN 36.149	**529029**	230, 50	150	140	60	0.55	55/150	B2	4.5	210
new					L 36.132**	**535977**	230, 50	150	140	45	0.43	65	–	4.5	210
	36/40	T-U/T-R	2G13/G10q	430	LN 36.570	**169779**	230, 50	150	140	92	0.80	35/90	B1	4.5	210
					LN 36.149	**529029**	230, 50	150	140	60	0.55	55/150	B2	4.5	210
new					L 36.132**	**535977**	230, 50	150	140	45	0.43	65	–	4.5	210
	38	TC-DD	GR10q	430	LN 36.570	**169779**	230, 50	155	140	92	0.80	35/90	B1	4.5	210
					LN 36.149	**529029**	230, 50	150	140	60	0.55	55/150	B2	4.5	210
new					L 36.132**	**535977**	230, 50	150	140	45	0.43	65	–	4.5	210
	58	T-U	2G13	670	LN 58.568	**169389**	230, 50	233	220	160	1.31	35/95	B1	7.0	320
					LN 58.189	**537038**	230, 50	190	180	100	0.87	50/135	B2	7.0	320
					LN 58.116	**508186**	230, 50	190	180	92	0.80	55/160	B2	7.0	320
					L 58.718**	**169658**	230, 50	190	180	92	0.80	60/170	–	7.0	320

* Energy efficiency: EEI=B2 and EEI=B1, valid until 2017

** Ballasts without CE mark for markets outside of the EU

Standard Ballasts
18–58 W, 240 V

For compact fluorescent lamps
Shape: 28 x 41 mm

	Lamp				Ballast									Capacitor	
	Output W	Type	Base	Current mA	Type	**Ref. No.**	Voltage V, Hz	a mm	b mm	c mm	Weight kg	$\Delta t/\Delta t_{an.}$ K	Energy efficiency*	C_P µF	Current mA
	240 V, 50 Hz														
new	18	TC-D/TC-T	G24d-2/GX24d-2	220	LN 18I.418	**164353**	240, 50	85	75	34	0.28	60/130	B1	2.0	110
		TC-F/TC-L	2G10/2G11	370	LN 18.507	**164566**	240, 50	155	140	92	0.80	35/60	B1	4.5	120
					LN 18.162	**533043**	240, 50	150	140	60	0.55	60/110	B2	4.5	120
					L 18.936**	**534627**	240, 50	150	140	45	0.43	70/140	–	4.5	120
		T-U	2G13	370	LN 18.507	**164566**	240, 50	155	140	92	0.80	35/60	B1	4.5	120
					LN 18.162	**533043**	240, 50	150	140	60	0.55	60/110	B2	4.5	120
					L 18.936**	**534627**	240, 50	150	140	45	0.43	70/140	–	4.5	120
	2x18	TC-F/TC-L	2G10/2G11	400	LN 2x18.135	**535778**	240, 50	150	140	45	0.43	65	B1	4.0	210
					L 36/40.443	**530008**	240, 50	150	140	60	0.55	65/155	B1	4.0	210
					LN 36.201	**527196**	240, 50	150	140	60	0.55	55/140	B1	4.0	210
					LN 36.505	**164555**	240, 50	155	140	92	0.80	40/95	B1	4.0	210
new	21	TC-DD	GR10q	260	LN 21.293	**547145**	240, 50	105	95	45	0,41	55	B1	3,0	120
	24	TC-F/TC-L	2G10/2G11	345	LN 18.507	**164566**	240, 50	155	140	92	0.80	35/60	B1	4.5	150
					LN 18.162	**533043**	240, 50	150	140	60	0.55	60/110	B2	4.5	150
					L 18.936**	**534627**	240, 50	150	140	45	0.43	70/140	–	4.5	150
	26	TC-D/TC-T	G24d-3/GX24d-3	325	LN 18.162	**533043**	240, 50	150	140	60	0.55	60/110	B1	4.5	150
new					LN 26.238	**545405**	240, 50	105	95	45	0.41	55/145	B2	3.5	140
	28	TC-DD	GR8/GR10q	320	LN 18.162	**533043**	240, 50	150	140	60	0.55	60/110	B1	3.5	150
					L 18.936**	**534627**	240, 50	150	140	45	0.43	70/140	–	3.5	150
	32	T-R	G10q	450	LN 36.505	**164555**	240, 50	155	140	92	0.80	40/95	B1	4.0	220
	36	TC-F/TC-L	2G10/2G11	430	LN 36.505	**164555**	240, 50	155	140	92	0.80	40/95	B1	4.5	210
					LN 36.201	**527196**	240, 50	155	140	60	0.55	55/140	B2	4.5	210
					L 36/40.443**	**164438**	240, 50	150	140	60	0.55	65/155	–	4.5	210
	36/40	T-U/T-R	2G13/G10q	430	LN 36.505	**164555**	240, 50	155	140	92	0.80	40/95	B1	4.5	210
					LN 36.201	**527196**	240, 50	150	140	60	0.55	55/140	B2	4.5	210
					L 36/40.443**	**164438**	240, 50	150	140	60	0.55	65/155	–	4.5	210
	38	TC-DD	GR10q	430	LN 36.201	**527196**	240, 50	150	140	60	0.55	55/140	B2	4.5	210
					L 36/40.443**	**164438**	240, 50	150	140	60	0.55	65/155	–	4.5	210
	58	T-U	2G13	670	LN 58.506	**164560**	240, 50	233	220	160	1.31	35/85	B1	7.0	320
					LN 58.190	**537056**	240, 50	190	180	100	0.87	50/150	B2	7.0	320
					LN 58.722	**534252**	240, 50	190	180	92	0.80	60/180	B2	7.0	320

* Energy efficiency: EEI=B2 and EEI=B1, valid until 2017

** Ballasts without CE mark for markets outside of the EU

Standard Ballasts
18–58 W, 220 V

For compact fluorescent lamps
Shape: 28 x 41 mm

	Lamp				Ballast									Capacitor	
	Output	Type	Base	Current	Type	**Ref. No.**	Voltage	a	b	c	Weight	$\Delta t/\Delta t_{an.}$	Energy efficiency*	C_P	Current
	W			mA			V, Hz	mm	mm	mm	kg	K		µF	mA
	220 V, 50 Hz														
new	18	TC-F/TC-L	2G10/2G11	370	L18.933	**534624**	220,50	150	140	45	0.43	70/160	–	4.5	120
new		T-U	2G13	370	L18.933	**534624**	220,50	150	140	45	0.43	70/160	–	4.5	120
new	2x18	TC-F/TC-L	2G10/2G11	400	L 36.158	**530252**	220,50	150	140	45	0.43	65	–	4.0	210
new	24	TC-F/TC-L	2G10/2G11	345	L18.933	**534624**	220,50	150	140	45	0.43	70/160	–	4.5	150
new	26	TC-D/TC-T	G24d-3/GX24d-3	325	L18.933	**534624**	220,50	150	140	45	0.43	70/160	–	3.5	140
new	28	TC-DD	GR8/GR10q	320	L18.933	**534624**	220,50	150	140	45	0.43	70/160	–	3.5	150
new	36	TC-F/TC-L	2G10/2G11	430	L 36.158	**530252**	220,50	150	140	45	0.43	65	–	4.5	210
new	36/40	T-U/T-R	2G13/G10q	430	L 36.158	**530252**	220,50	150	140	45	0.43	65	–	4.5	210
new	38	TC-DD	GR10q	430	L 36.158	**530252**	220,50	150	140	45	0.43	65	–	4.5	210
new	58	T-U	2G13	670	L 58.625	**164828**	220,50	190	180	92	0.80	55/155	–	7.0	320
	220 V, 60 Hz														
	18	TC-D/TC-T	G24d-2/GX24d-2	220	L 18I.602	**164779**	220, 60	85	75	34	0.32	45/110	–	2.0	110
new		TC-F/TC-L	2G10/2G11	370	L 18.121	**532149**	220, 60	110	100	45	0.42	65/145	–	4.0	150
					L 18.121	**528582**	220, 60	150	140	45	0.43	65/145	–	4.0	150
					L 18.249	**538801**	220, 60	150	140	34	0.32	75/140	–	4.0	150
		T-U	2G13	370	L 18.121	**532149**	220, 60	110	100	45	0.42	65/145	–	4.0	150
new					L 18.121	**528582**	220, 60	150	140	45	0.43	65/145	–	4.0	150
					L 18.249	**538801**	220, 60	150	140	34	0.32	75/140	–	4.0	150
	2x18	TC-F/TC-L	2G10/2G11	400	L 36.120	**509373**	220, 60	150	140	45	0.43	60/170	–	4.0	210
	24	TC-F/TC-L	2G10/2G11	345	L 18.121	**532149**	220, 60	110	100	45	0.42	65/145	–	4.0	190
new					L 18.121	**528582**	220, 60	150	140	45	0.43	65/145	–	4.0	190
					L 18.249	**538801**	220, 60	150	140	34	0.32	75/140	–	4.0	190
	26	TC-D/TC-T	G24d-3/GX24d-3	325	L 18.121	**532149**	220, 60	110	100	45	0.42	65/145	–	3.0	160
new					L 18.121	**528582**	220, 60	150	140	45	0.43	65/145	–	3.0	160
					L 18.249	**538801**	220, 60	150	140	34	0.32	75/140	–	3.0	160
	28	TC-DD	GR8/GR10q	320	L 18.121	**532149**	220, 60	110	100	45	0.42	65/145	–	3.0	155
					L 18.249	**538801**	220, 60	150	140	34	0.32	75/140	–	3.0	155
	36	TC-F/TC-L	2G10/2G11	430	L 36.120	**509373**	220, 60	150	140	45	0.43	60/170	–	4.0	210
	36/40	T-U/T-R	2G13/G10q	430	L 36.120	**509373**	220, 60	150	140	45	0.43	60/170	–	4.0	220
	38	TC-DD	GR10q	430	L 36.120	**509373**	220, 60	150	140	45	0.43	60/170	–	4.0	220
	58	T-U	2G13	670	L 58.657	**164870**	220, 60	195	180	92	0.80	55/140	–	6.0	320

* Energy efficiency: EEI=B2 and EEI=B1, valid until 2017

Super-thin Ballasts 5–40 W, 230 V

For compact fluorescent lamps
Shape: 18 x 41 mm

Vacuum-impregnated with polyester resin
Push-in terminal for leads: 0.5–1.5 mm²
With earth screw
tw 130
Protection class I

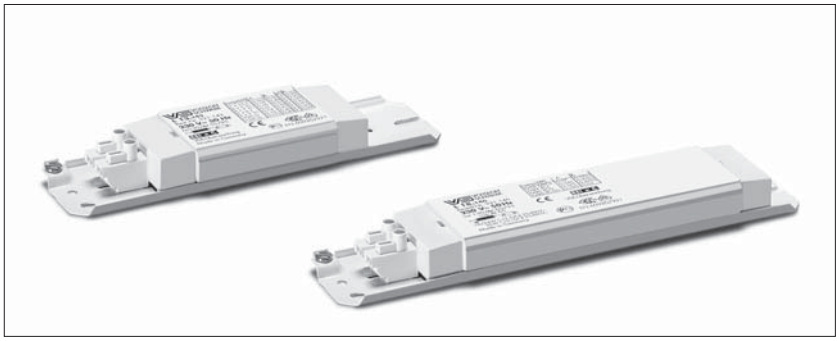

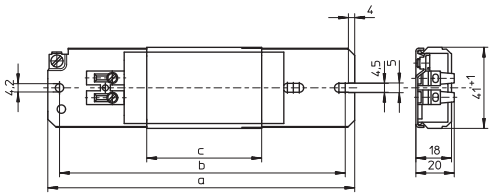

Lamp				Ballast									Capacitor	
Output W	Type	Base	Current mA	Type	**Ref. No.**	Voltage V, Hz	a mm	b mm	c mm	Weight kg	$\Delta t/\Delta t_{an.}$ K	Energy efficiency*	C_P µF	Current mA
230 V, 50 Hz														
5	TC-S	G23	180	L 7/9/11.141	**163052**	230, 50	155	140	58	0.37	50/80	B2	2.0	50
2x5	TC-S	G23	180	LN 13.143	**163071**	230, 50	155	140	58	0.37	45/70	B2	2.0	70
7	TC-S	G23	175	L 7/9/11.141	**163052**	230, 50	155	140	58	0.37	50/80	B2	2.0	50
2x7	TC-S	G23	160	LN 13.143	**163071**	230, 50	155	140	58	0.37	45/70	B2	2.0	70
9	TC-S	G23	170	L 7/9/11.141	**163052**	230, 50	155	140	58	0.37	50/80	B2	2.0	60
2x9	TC-S	G23	140	LN 13.143	**163071**	230, 50	155	140	58	0.37	45/70	B2	2.0	80
10	TC-D	G24d-1	190	LN 13.143	**163071**	230, 50	155	140	58	0.37	45/70	B2	2.0	70
	TC-DD	GR10q	180	LN 13.143	**163071**	230, 50	155	140	58	0.37	45/70	B2	2.0	70
11	TC-S	G23	155	L 7/9/11.141	**163052**	230, 50	155	140	58	0.37	50/80	B2	2.0	80
13	TC-D/TC-T	G24d-1/GX24d-1	175	LN 13.143	**163071**	230, 50	155	140	58	0.37	45/70	B2	2.0	80
16	TC-DD	GR8/GR10q	195	LN 16.145	**163084**	230, 50	155	140	58	0.37	50/110	B2	2.0	100
18	TC-D	G24d-2/GX24d-2	220	LN 18I.147	**163102**	230, 50	155	140	58	0.37	55/110	B2	2.0	110
	TC-F/TC-L	2G10/2G11	370	LN 18.220	**526592**	230, 50	195	180	116	0.70	55/80	B2	4.5	120
	T-U	2G13	370	LN 18.220	**526592**	230, 50	195	180	116	0.70	55/80	B2	4.5	120
2x18	TC-F/TC-L	2G10/2G11	400	LN 36.221	**526593**	230, 50	195	180	116	0.70	50/125	B2	4.0	210
24	TC-F/TC-L	2G10/2G11	345	LN 18.220	**526592**	230, 50	195	180	116	0.70	55/80	B2	4.5	150
26	TC-D/TC-T	G24d-3/GX24d-3	325	LN 18.220	**526592**	230, 50	195	180	116	0.70	55/80	B1	3.5	140
28	TC-DD	GR8/GR10q	320	LN 18.220	**526592**	230, 50	195	180	116	0.70	55/80	B1	3.5	150
36	TC-F/TC-L	2G10/2G11	430	LN 36.221	**526593**	230, 50	195	180	116	0.70	50/125	B2	4.5	210
36/40	T-U/T-R	2G13/G10q	430	LN 36.221	**526593**	230, 50	195	180	116	0.70	50/125	B2	4.5	220
38	TC-DD	GR10q	430	LN 36.221	**526593**	230, 50	195	180	116	0.70	50/125	B2	4.5	210

* Energy efficiency: EEI=B2 and EEI=B1, valid until 2017

Super-thin Ballasts 5–40 W, 240/220 V

For compact fluorescent lamps
Shape: 18 x 41 mm

Lamp				Ballast									Capacitor	
Output	Type	Base	Current	Type	**Ref. No.**	Voltage	a	b	c	Weight	$\Delta t/\Delta t_{an.}$	Energy efficiency*	C_P	Current
W			mA			V, Hz	mm	mm	mm	kg	K		µF	mA
240 V, 50 Hz														
2x5	TC-S	G23	180	L 13.111	**162966**	240, 50	155	140	58	0.37	55/85	B2	2.0	70
7	TC-S	G23	175	L 7/9/11.110	**162958**	240, 50	155	140	58	0.37	55/80	B2	2.0	50
2x7	TC-S	G23	160	L 13.111	**162966**	240, 50	155	140	58	0.37	55/85	B2	2.0	70
9	TC-S	G23	170	L 7/9/11.110	**162958**	240, 50	155	140	58	0.37	55/80	B2	2.0	60
2x9	TC-S	G23	140	L 13.111	**162966**	240, 50	155	140	58	0.37	55/85	B2	2.0	80
10	TC-D	G24d-1	190	L 13.111	**162966**	240, 50	155	140	58	0.37	55/85	B2	2.0	70
	TC-DD	GR10q	180	L 13.111	**162966**	240, 50	155	140	58	0.37	55/85	B2	2.0	70
11	TC-S	G23	155	L 7/9/11.110	**162958**	240, 50	155	140	58	0.37	55/80	B2	2.0	80
13	TC-D/TC-T	G24d-1/GX24d-1	175	L 13.111	**162966**	240, 50	155	140	58	0.37	55/85	B2	2.0	80
16	TC-DD	GR8/GR10q	195	L 16.113	**162976**	240, 50	155	140	58	0.37	45/110	B2	2.0	100
18	TC-D/TC-T	G24d-2/GX24d-2	220	L 18l.132	**163031**	240, 50	155	140	58	0.37	70/140	B2	2.0	110
	TC-F/TC-L	2G10/2G11	370	LN 18.121	**529272**	240, 50	195	180	116	0.64	50/85	B2	2.0	110
	T-U	2G13	370	LN 18.121	**529272**	240, 50	195	180	116	0.64	50/85	B2	4.5	120
2x18	TC-F/TC-L	2G10/2G11	400	LN 36.124	**529273**	240, 50	195	180	116	0.64	55/140	B2	4.0	210
24	TC-F/TC-L	2G10/2G11	345	LN 18.121	**529272**	240, 50	195	180	116	0.64	50/85	B2	4.5	150
26	TC-D/TC-T	G24d-3/GX24d-3	325	LN 18.121	**529272**	240, 50	195	180	116	0.64	50/85	B1	3.5	140
28	TC-DD	GR8/GR10q	320	LN 18.121	**529272**	240, 50	195	180	116	0.64	50/85	B1	3.5	150
36	TC-F/TC-L	2G10/2G11	430	LN 36.124	**529273**	240, 50	195	180	116	0.64	55/140	B2	4.5	210
36/40	T-U/T-R	2G13/G10q	430	LN 36.124	**529273**	240, 50	195	180	116	0.64	55/140	B2	4.5	210
38	TC-DD	GR8/GR10q	430	LN 36.124	**529273**	240, 50	195	180	116	0.64	55/140	B2	4.5	210
220 V, 60 Hz														
5	TC-S	G23	180	L 7/9/11.134	**163041**	220, 60	155	140	58	0.37	45/65	–	2.0	70
2x5	TC-S	G23	180	L 13.164	**163162**	220, 60	155	140	58	0.37	40/80	–	2.0	90
7	TC-S	G23	175	L 7/9/11.134	**163041**	220, 60	155	140	58	0.37	45/65	–	2.0	70
2x7	TC-S	G23	160	L 13.164	**163162**	220, 60	155	140	58	0.37	40/80	–	2.0	90
9	TC-S	G23	170	L 7/9/11.134	**163041**	220, 60	155	140	58	0.37	45/65	–	2.0	70
2x9	TC-S	G23	140	L 13.164	**163162**	220, 60	155	140	58	0.37	40/80	–	2.0	90
10	TC-D	G24d-1	190	L 13.164	**163162**	220, 60	155	140	58	0.37	40/80	–	2.0	80
11	TC-S	G23	155	L 7/9/11.134	**163041**	220, 60	155	140	58	0.37	45/65	–	2.0	80
13	TC-D/TC-T	G24d-1/GX24d-1	175	L 13.164	**163162**	220, 60	155	140	58	0.37	40/80	–	2.0	110
16	TC-DD	GR8/GR10q	195	L 16.202	**163235**	220, 60	155	140	58	0.37	45/110	–	2.0	100
18	TC-F/TC-L	2G10/2G11	370	L 18.140	**163045**	220, 60	195	180	116	0.64	55/80	–	4.0	150
	T-U	2G13	370	L 18.140	**163045**	220, 60	195	180	116	0.64	55/80	–	4.0	150
2x18	TC-F/TC-L	2G10/2G11	400	L 36.188	**163218**	220, 60	195	180	116	0.64	45/110	–	4.0	210
24	TC-F/TC-L	2G10/2G11	345	L 18.140	**163045**	220, 60	195	180	116	0.64	55/80	–	4.0	190
26	TC-D/TC-T	G24d-3/GX24d-3	325	L 18.140	**163045**	220, 60	195	180	116	0.64	55/80	–	3.0	160
28	TC-DD	GR8/GR10q	320	L 18.140	**163045**	220, 60	195	180	116	0.64	55/80	–	3.0	155
36	TC-F/TC-L	2G10/2G11	430	L 36.188	**163218**	220, 60	195	180	116	0.64	45/110	–	4.0	210
36/40	T-U/T-R	2G13/G10q	430	L 36.188	**163218**	220, 60	195	180	116	0.64	45/110	–	4.0	220
38	TC-DD	GR10q	430	L 36.188	**163218**	220, 60	195	180	116	0.64	45/110	–	4.0	220

* Energy efficiency: EEI=B2 and EEI=B1, valid until 2017

Super-thin Ballasts with Pre-Mounted Lampholder 5–26 W 230/240/220 V

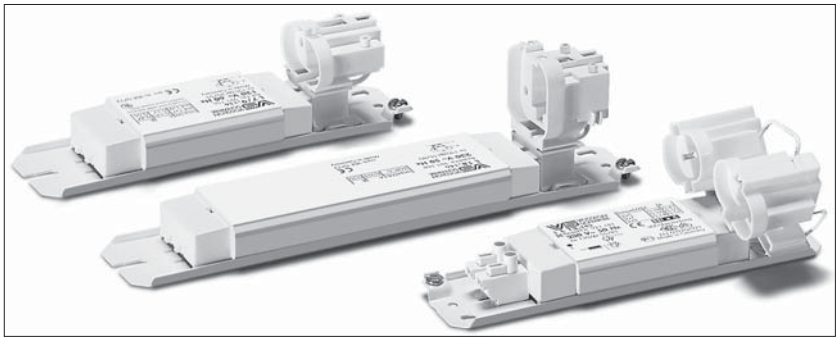

For compact fluorescent lamps
Shape: 18 x 41 mm

Vacuum-impregnated with polyester resin
Push-in terminals: 0.5–1.5 mm²
With earth screw
With groove for reflector attachment
tw 130
Protection class I

A

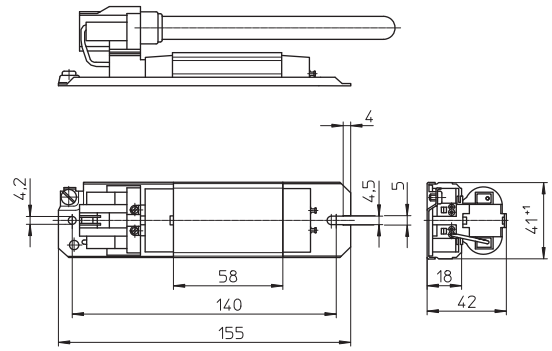

C

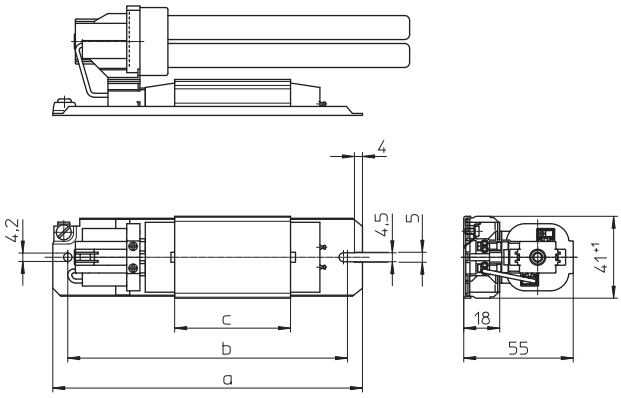

B

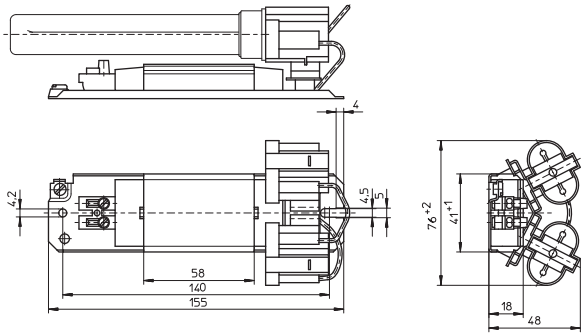

Super-thin Ballasts with Pre-Mounted Lampholder 5–26 W, 230/240/220 V

Lamp				Ballast										Capacitor	
Output W	Type	Base	Current mA	Type	**Ref. No.**	Voltage V, Hz	Drawing	a mm	b mm	c mm	Weight kg	$\Delta t/\Delta t_{an.}$ K	Energy efficiency*	C_P µF	Current mA
230 V, 50 Hz															
5	TC-S	G23	180	L 7/9/11.141	**163148**	230, 50	A	155	140	58	0.37	50/80	B2	2.0	50
2x5	TC-S	G23	180	LN 13.143	**163207**	230, 50	B	155	140	58	0.37	45/70	B2	2.0	70
7	TC-S	G23	175	L 7/9/11.141	**163148**	230, 50	A	155	140	58	0.37	50/80	B2	2.0	50
2x7	TC-S	G23	160	LN 13.143	**163207**	230, 50	B	155	140	58	0.37	45/70	B2	2.0	70
9	TC-S	G23	170	L 7/9/11.141	**163148**	230, 50	A	155	140	58	0.37	50/80	B2	2.0	60
2x9	TC-S	G23	140	LN 13.143	**163207**	230, 50	B	155	140	58	0.37	45/70	B2	2.0	80
10	TC-D	G24d-1	190	LN 13.143	**163157**	230, 50	C	155	140	58	0.37	45/70	B2	2.0	70
11	TC-S	G23	155	L 7/9/11.141	**163148**	230, 50	A	155	140	58	0.37	50/80	B2	2.0	80
13	TC-D	G24d-1	175	LN 13.143	**163157**	230, 50	C	155	140	58	0.37	45/70	B2	2.0	80
18	TC-D	G24d-2	220	LN 18I.147	**163170**	230, 50	C	155	140	58	0.37	55/110	B2	2.0	110
26	TC-D	G24d-3	325	LN 18.220	**526591**	230, 50	C	215	200	116	0.64	55/80	B1	3.5	140
				LN 18.146	**163180**	230, 50	C	215	200	116	0.64	60/95	B2	3.5	140
240 V, 50 Hz															
5	TC-S	G23	180	L 7/9/11.110	**163007**	240, 50	A	155	140	58	0.37	55/80	B2	2.0	50
2x5	TC-S	G23	180	L 13.111	**163212**	240, 50	B	155	140	58	0.37	55/85	B2	2.0	70
7	TC-S	G23	175	L 7/9/11.110	**163007**	240, 50	A	155	140	58	0.37	55/80	B2	2.0	50
2x7	TC-S	G23	160	L 13.111	**163212**	240, 50	B	155	140	58	0.37	55/85	B2	2.0	70
9	TC-S	G23	170	L 7/9/11.110	**163007**	240, 50	A	155	140	58	0.37	55/80	B2	2.0	60
2x9	TC-S	G23	140	L 13.111	**163212**	240, 50	B	155	140	58	0.37	55/85	B2	2.0	80
10	TC-D	G24d-1	190	L 13.111	**163016**	240, 50	C	155	140	58	0.37	55/85	B2	2.0	70
11	TC-S	G23	155	L 7/9/11.110	**163007**	240, 50	A	155	140	58	0.37	55/80	B2	2.0	80
13	TC-D	G24d-1	175	L 13.111	**163016**	240, 50	C	155	140	58	0.37	55/85	B2	2.0	80
18	TC-D	G24d-2	220	L 18I.132	**163033**	240, 50	C	155	140	58	0.37	70/140	B2	2.0	110
26	TC-D	G24d-3	325	L 18.114	**163024**	240, 50	C	215	200	116	0.64	60/90	B2	3.5	140
220 V, 60 Hz															
5	TC-S	G23	180	L 7/9/11.134	**163036**	220, 60	A	155	140	58	0.37	45/65	–	2.0	70
2x5	TC-S	G23	180	L 13.164	**178627**	220, 60	B	155	140	58	0.37	40/80	–	2.0	90
7	TC-S	G23	175	L 7/9/11.134	**163036**	220, 60	A	155	140	58	0.37	45/65	–	2.0	70
2x7	TC-S	G23	160	L 13.164	**178627**	220, 60	B	155	140	58	0.37	40/80	–	2.0	90
9	TC-S	G23	170	L 7/9/11.134	**163036**	220, 60	A	155	140	58	0.37	45/65	–	2.0	70
2x9	TC-S	G23	140	L 13.164	**178627**	220, 60	B	155	140	58	0.37	40/80	–	2.0	90
10	TC-D	G24d-1	190	L 13.164	**163189**	220, 60	C	155	140	58	0.37	40/80	–	2.0	80
11	TC-S	G23	155	L 7/9/11.134	**163036**	220, 60	A	155	140	58	0.37	45/65	–	2.0	80
13	TC-D	G24d-1	165	L 13.164	**163189**	220, 60	C	155	140	58	0.37	40/80	–	2.0	80

* Energy efficiency: EEI=B2 and EEI=B1, valid until 2017

Slim Ballasts
5–40 W, 230 V

For compact fluorescent lamps
Shape: 28 x 28 mm

Vacuum-impregnated with polyester resin
Push-in terminal for leads: 0.5–1 mm²
For the automatic luminaire wiring:
IDC terminals for leads H05V-U 0.5
tw 130
Protection class I

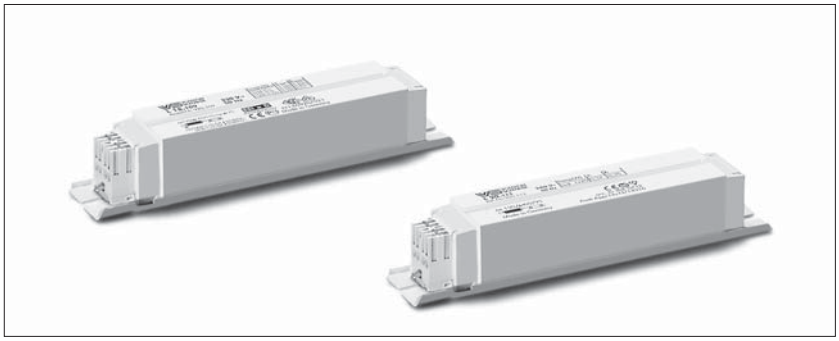

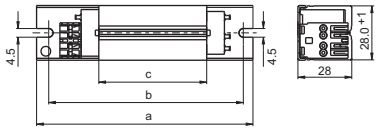

Lamp				Ballast									Capacitor	
Output W	Type	Base	Current mA	Type	**Ref. No.**	Voltage V, Hz	a mm	b mm	c mm	Weight kg	$\Delta t/\Delta t_{an.}$ K	Energy efficiency*	C_P µF	Current mA
230 V, 50 Hz														
5	TC-S	G23	180	L 7/9/11.131	**179409**	230, 50	130	120	52	0.34	50/70	B2	2.0	50
2x5	TC-S	G23	180	LN 13.134	**179466**	230, 50	130	120	52	0.34	50/80	B2	2.0	70
7	TC-S	G23	175	L 7/9/11.131	**179409**	230, 50	130	120	52	0.34	50/70	B2	2.0	50
2x7	TC-S	G23	160	LN 13.134	**179466**	230, 50	130	120	52	0,34	50/80	B2	2.0	70
9	TC-S	G23	170	L 7/9/11.131	**179409**	230, 50	130	120	52	0.34	50/70	B1	2.0	60
2x9	TC-S	G23	140	LN 13.134	**179466**	230, 50	130	120	52	0.34	50/80	B2	2.0	80
10	TC-D	G24d-1	190	LN 13.134	**179466**	230, 50	130	120	52	0.34	50/80	B2	2.0	70
	TC-DD	GR10q	180	LN 13.134	**179466**	230, 50	130	120	52	0.34	50/80	B2	2.0	70
11	TC-S	G23	155	L 7/9/11.131	**179409**	230, 50	130	120	52	0.34	50/70	B1	2.0	80
13	TC-D/TC-T	G24d-1/GX24d-1	175	LN 13.134	**179466**	230, 50	130	120	52	0.34	50/80	B2	2.0	80
16	TC-DD	GR8/GR10q	195	LN 16.135	**505607**	230, 50	130	120	52	0.34	50/125	B2	2.0	100
18	TC-D/TC-T	G24d-2/GX24d-2	220	LN 18I.130	**179231**	230, 50	130	120	52	0.34	55/125	B1	2.0	110
	TC-F/TC-L	2G10/2G11	370	LN 18.127	**526596**	230, 50	190	180	120	0.70	45/80	B2	4.5	120
	T-U	2G13	370	LN 18.127	**526596**	230, 50	190	180	120	0.70	45/80	B2	4.5	190
2x18	TC-F/TC-L	2G10/2G11	400	LN 36.172	**526597**	230, 50	190	180	120	0.70	50/130	B2	4.0	210
24	TC-F/TC-L	2G10/2G11	345	LN 18.127	**526596**	230, 50	190	180	120	0.70	45/80	B2	4.5	150
26	TC-D/TC-T	G24d-3/GX24d-3	325	LN 18.127	**526596**	230, 50	190	180	120	0.70	45/80	B1	3.5	140
28	TC-DD	GR8/GR10q	320	LN 18.127	**526596**	230, 50	190	180	120	0.70	45/80	B1	3.5	155
36	TC-F/TC-L	2G10/2G11	430	LN 36.172	**526597**	230, 50	190	180	120	0.70	50/130	B2	4.5	210
36/40	T-U/T-R	2G13/G10q	430	LN 36.172	**526597**	230, 50	190	180	120	0.70	50/130	B2	4.0	210
38	TC-DD	GR10q	430	LN 36.172	**526597**	230, 50	190	180	120	0.70	50/130	B2	4.5	210

* Energy efficiency: EEI=B2 and EEI=B1, valid until 2017

Slim Ballasts 5–58 W, 240/220 V

For compact fluorescent lamps
Shape: 28 x 28 mm

Lamp				Ballast									Capacitor	
Output W	Type	Base	Current mA	Type	**Ref. No.**	Voltage V, Hz	a mm	b mm	c mm	Weight kg	$\Delta t/\Delta t_{an.}$ K	Energy efficiency*	C_P µF	Current mA
240 V, 50 Hz														
5	TC-S	G23	180	L 7/9/11.137	**505609**	240, 50	130	120	52	0.34	50/70	B2	2.0	50
2x5	TC-S	G23	180	L 13.129	**179258**	240, 50	130	120	52	0.34	55/80	B2	2.0	70
7	TC-S	G23	175	L 7/9/11.137	**505609**	240, 50	130	120	52	0.34	50/70	B2	2.0	50
2x7	TC-S	G23	160	L 13.129	**179258**	240, 50	130	120	52	0.34	55/80	B2	2.0	70
9	TC-S	G23	170	L 7/9/11.137	**505609**	240, 50	130	120	52	0.34	50/70	B1	2.0	60
2x9	TC-S	G23	140	L 13.129	**179258**	240, 50	130	120	52	0.34	55/80	B2	2.0	80
10	TC-D	G24d-1	190	L 13.129	**179258**	240, 50	130	120	52	0.34	55/80	B2	2.0	70
	TC-DD	GR10q	180	L 13.129	**179258**	240, 50	130	120	52	0.34	55/80	B2	2.0	70
11	TC-S	G23	155	L 7/9/11.137	**505609**	240, 50	130	120	52	0.34	50/70	B1	2.0	80
13	TC-D/TC-T	G24d-1/GX24d-1	175	L 13.129	**179258**	240, 50	130	120	52	0.34	55/80	B2	2.0	80
16	TC-DD	GR8/GR10q	195	LN 16.146	**505629**	240, 50	130	120	52	0.34	55/125	B2	2.0	100
18	TC-D/TC-T	G24d-2/GX24d-2	220	LN 18I.147	**505630**	240, 50	130	120	52	0.34	60/120	B2	2.0	110
	TC-F/TC-L	2G10/2G11	370	LN 18.173	**529066**	240, 50	190	180	120	0.70	45/80	B2	4.5	120
	T-U	2G13	370	LN 18.173	**529066**	240, 50	190	180	120	0.70	45/80	B2	4.5	190
2x18	TC-F/TC-L	2G10/2G11	400	LN 36.174	**529071**	240, 50	190	180	120	0.70	50/135	B2	4.0	210
24	TC-F/TC-L	2G10/2G11	345	LN 18.173	**529066**	240, 50	190	180	120	0.70	45/80	B2	4.5	150
26	TC-D/TC-T	G24d-3/GX24d-3	325	LN 18.173	**529066**	240, 50	190	180	120	0.70	45/80	B1	3.5	140
28	TC-DD	GR8/GR10q	320	LN 18.173	**529066**	240, 50	190	180	120	0.70	45/80	B1	3.5	150
36	TC-F/TC-L	2G10/2G11	430	LN 36.174	**529071**	240, 50	190	180	120	0.70	50/135	B2	4.5	210
36/40	T-U/T-R	2G13/G10q	430	LN 36.174	**529071**	240, 50	190	180	120	0.70	50/135	B2	4.5	210
38	TC-DD	GR10q	430	LN 36.174	**529071**	240, 50	190	180	120	0.70	50/135	B2	4.5	210
220 V, 60 Hz														
5	TC-S	G23	180	L 7/9/11.138	**505610**	220, 60	130	120	52	0.34	50/70	–	2.0	70
2x5	TC-S	G23	180	L 13.136	**505608**	220, 60	130	120	52	0.34	50/80	–	2.0	90
7	TC-S	G23	175	L 7/9/11.138	**505610**	220, 60	130	120	52	0.34	50/70	–	2.0	70
2x7	TC-S	G23	160	L 13.136	**505608**	220, 60	130	120	52	0.34	50/80	–	2.0	90
9	TC-S	G23	170	L 7/9/11.138	**505610**	220, 60	130	120	52	0.34	50/70	–	2.0	70
2x9	TC-S	G23	140	L 13.136	**505608**	220, 60	130	120	52	0.34	50/80	–	2.0	90
10	TC-D	G24d-1	190	L 13.136	**505608**	220, 60	130	120	52	0.34	50/80	–	2.0	80
	TC-DD	GR10q	180	L 13.136	**505608**	220, 60	130	120	52	0.34	50/80	–	2.0	80
11	TC-S	G23	155	L 7/9/11.138	**505610**	220, 60	130	120	52	0.34	50/70	–	2.0	80
13	TC-D/TC-T	G24d-1/GX24d-1	165	L 13.136	**505608**	220, 60	130	120	52	0.34	50/80	–	2.0	110
16	TC-DD	GR8/GR10q	195	LN 16.188	**539981**	220, 60	150	140	52	0.34	55/110	–	2.0	100
18	TC-F/TC-L	2G10/2G11	370	L 20.148	**505768**	220, 60	150	140	102	0.60	55/85	–	4.0	150
	T-U	2G13	370	L 20.148	**505768**	220, 60	150	140	102	0.60	55/85	–	4.0	150
2x18	TC-F/TC-L	2G10/2G11	400	L 36.126	**170009**	220, 60	150	140	102	0.60	55/125	–	4.0	210
24	TC-F/TC-L	2G10/2G11	345	L 20.148	**505768**	220, 60	150	140	102	0.60	55/85	–	4.0	190
26	TC-D/TC-T	G24d-3/GX24d-3	325	L 20.148	**505768**	220, 60	150	140	102	0.60	55/85	–	3.0	160
28	TC-DD	GR8/GR10q	320	L 20.148	**505768**	220, 60	150	140	102	0.60	55/85	–	3.0	155
36	TC-F/TC-L	2G10/2G11	430	L 36.126	**170009**	220, 60	150	140	102	0.60	55/125	–	4.0	210
36/40	T-U/T-R	2G13/G10q	430	L 36.126	**170009**	220, 60	150	140	102	0.60	55/125	–	4.0	210
38	TC-DD	GR10q	430	L 36.126	**170009**	220, 60	150	140	102	0.60	55/125	–	4.0	220
58	T-U	2G13	670	L 58/65.149	**507213**	220, 60	230	220	178	1.00	60/140	–	6.0	320

* Energy efficiency: EEI=B2 and EEI=B1, valid until 2017

Ballasts
5–20 W, 120 V
60 Hz

For compact fluorescent lamps
Shape: 28 x 41 mm

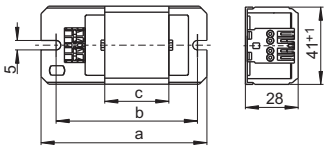



Vacuum-impregnated with polyester resin
Push-in terminal for leads: 0.5–1 mm²
For the automatic luminaire wiring:
IDC terminals for leads H05V-U 0.5
tw 130
Protection class I

Lamp				Ballast								Capacitor	
Output W	Type	Base	Current mA	Type	**Ref. No.**	Voltage V, Hz	a mm	b mm	c mm	Weight kg	$\Delta t/\Delta t_{an.}$ K	C_P µF	Current mA
120 V, 60 Hz													
5	TC-S	G23	180	L 7/9.209	**163318**	120, 60	85	75	34	0.32	25/40	3.0	90
7	TC-S	G23	175	L 7/9.209	**163318**	120, 60	85	75	34	0.32	25/40	3.0	90
9	TC-S	G23	170	L 7/9.209	**163318**	120, 60	85	75	34	0.32	25/40	3.0	90
new 18	TC-F/TC-L	2G10/2G11	370	L 20.122	**163256**	120, 60	85	75	34	0.32	35/80	5.0	150
new 20	T-U	2G13	370	L 20.122	**163256**	120, 60	85	75	34	0.32	35/80	5.0	190

Operating Units 5–40 W, 120 V 60 Hz

For compact fluorescent lamps
Shape: 33 x 41 mm

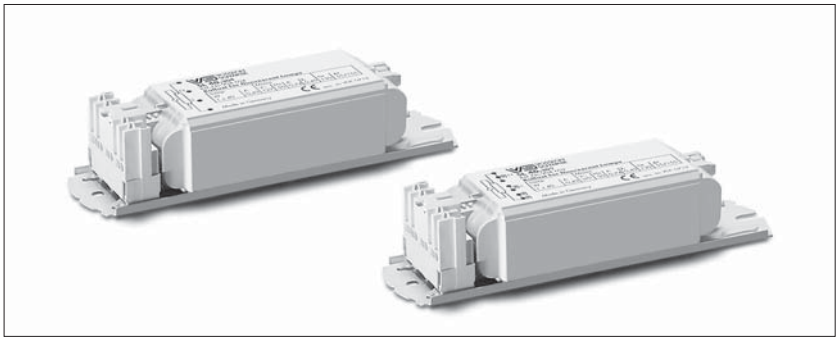

Vacuum-impregnated with polyester resin
Push-in terminal for leads: 0.5–1.5 mm²
For the automatic luminaire wiring:
IDC terminals for leads H05V-U 0.5
tw 130
Protection class I

These units are a combination of transformers/ ballasts (high-reactance transformers) which supply the lamp with the necessary operating voltage. For these units a usual starter (220–240 V) is necessary.

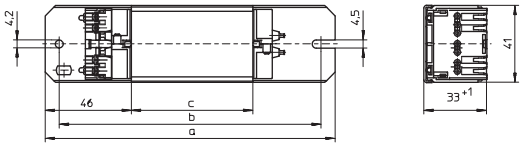

Lamp				Ballast								Capacitor	
Output W	Type	Base	Current mA	Type	**Ref. No.**	Voltage V, Hz	a mm	b mm	c mm	Weight kg	$\Delta t/\Delta t_{an.}$ K	C_P µF	Current mA
120 V, 60 Hz													
2x5	TC-S	G23	180	SL 13.331	**169496**	120, 60	125	110	40	0.47	50/80	8.0	150
2x7	TC-S	G23	160	SL 13.331	**169496**	120, 60	125	110	40	0.47	50/80	7.0	170
2x9	TC-S	G23	145	SL 13.331	**169496**	120, 60	125	110	40	0.47	50/80	7.0	165
10	TC-D	G24d-1	190	SL 13.331	**169496**	120, 60	125	110	40	0.47	50/80	8.0	150
13	TC-D/TC-T	G24d-1/GX24d-1	165	SL 13.331	**169496**	120, 60	125	110	40	0.47	50/80	7.0	170
18	TC-D/TC-T	G24d-2/GX24d-2	220	SL 18I.334	**169727**	120, 60	125	110	40	0.47	45/95	7.0	280
2x18	TC-F/TC-L	2G10/2G11	410	SL 36.342	**506405**	120, 60	155	140	65	0.71	75/175	16.0	430
24	TC-F/TC-L	2G10/2G11	340	SL 24.335	**168108**	120, 60	155	140	65	0.71	55/120	12.0	350
26	TC-D/TC-T	G24d-3/GX24d-3	315	SL 24.335	**168108**	120, 60	155	140	65	0.71	55/120	12.0	310
28	TC-DD	GR8/GR10q	325	SL 24.335	**168108**	120, 60	155	140	65	0.71	55/120	12.0	320
36	TC-F/TC-L	2G10/2G11	410	SL 36.342	**506405**	120, 60	155	140	65	0.71	75/175	16.0	440
36/40	T-U/T-R	2G13/G10q	410	SL 36.342	**506405**	120, 60	155	140	65	0.71	75/175	16.0	470
38	TC-DD	GR10q	410	SL 36.342	**506405**	120, 60	155	140	65	0.71	75/175	16.0	460

Standard Ballasts
4–13 W
230/240/220 V

For fluorescent lamps
Shape: 28 x 41 mm

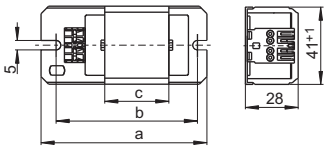



Vacuum-impregnated with polyester resin
Push-in terminal for leads: 0.5–1 mm²
For the automatic luminaire wiring:
IDC terminals for leads H05V-U 0.5
tw 130
Protection class I

	Lamp				Ballast									Capacitor	
	Output W	Type	Base	Current mA	Type	**Ref. No.**	Voltage V, Hz	a mm	b mm	c mm	Weight kg	$\Delta t/\Delta t_{an.}$ K	Energy efficiency*	C_P µF	Current mA
	230 V, 50 Hz														
new	4	T5 (T16)	G5	170	L 4/6/8.304	**163683**	230, 50	85	75	34	0.32	55/85	B2	2.0	40
new	2x4	T5 (T16)	G5	155	L 4/6/8.304	**163683**	230, 50	85	75	34	0.32	55/85	B1	2.0	50
new	6	T5 (T16)	G5	160	L 4/6/8.304	**163683**	230, 50	85	75	34	0.32	55/85	B1	2.0	50
	2x6	T5 (T16)	G5	175	LN 13.313	**163711**	230, 50	85	75	34	0.32	55/80	B1	2.0	65
new	8	T5 (T16)	G5	145	L 4/6/8.304	**163683**	230, 50	85	75	34	0.32	55/85	B1	2.0	60
	2x8	T5 (T16)	G5	155	LN 13.313	**163711**	230, 50	85	75	34	0.32	55/80	B1	2.0	85
	13	T5 (T16)	G5	165	LN 13.313	**163711**	230, 50	85	75	34	0.32	55/80	B1	2.0	80
	240 V, 50 Hz														
new	4	T5 (T16)	G5	170	L 4/6/8.404	**164326**	240, 50	85	75	34	0.32	55/80	B2	2.0	40
new	2x4	T5 (T16)	G5	155	L 4/6/8.404	**164326**	240, 50	85	75	34	0.32	55/80	B1	2.0	50
new	6	T5 (T16)	G5	160	L 4/6/8.404	**164326**	240, 50	85	75	34	0.32	55/80	B1	2.0	50
	2x6	T5 (T16)	G5	175	LN 13.413	**164342**	240, 50	85	75	34	0.32	60/90	B1	2.0	65
new	8	T5 (T16)	G5	145	L 4/6/8.404	**164326**	240, 50	85	75	34	0.32	55/80	B1	2.0	60
	2x8	T5 (T16)	G5	155	LN 13.413	**164342**	240, 50	85	75	34	0.32	60/90	B1	2.0	85
	13	T5 (T16)	G5	165	LN 13.413	**164342**	240, 50	85	75	34	0.32	60/90	B1	2.0	80
	220 V, 60 Hz														
	4	T5 (T16)	G5	170	L 4/6/8.218	**532644**	220, 60	85	75	34	0.32	60/80	–	2.0	40
	2x4	T5 (T16)	G5	155	L 4/6/8.218	**532644**	220, 60	85	75	34	0.32	60/80	–	2.0	50
	6	T5 (T16)	G5	160	L 4/6/8.218	**532644**	220, 60	85	75	34	0.32	60/80	–	2.0	50
new	2x6	T5 (T16)	G5	175	L 13.210	**520992**	220, 60	85	75	34	0.32	45/80	–	2.0	65
	8	T5 (T16)	G5	145	L 4/6/8.218	**532644**	220, 60	85	75	34	0.32	60/80	–	2.0	60
new	2x8	T5 (T16)	G5	155	L 13.210	**520992**	220, 60	85	75	34	0.32	45/80	–	2.0	85
new	13	T5 (T16)	G5	165	L 13.210	**520992**	220, 60	85	75	34	0.32	45/80	–	2.0	80

* Energy efficiency: EEI=B2 and EEI=B1, valid until 2017

new

Standard Ballasts
14–65 W, 230 V

For fluorescent lamps
Shape: 28 x 41 mm

Vacuum-impregnated with polyester resin
Push-in terminal for leads: 0.5–1 mm²
For the automatic luminaire wiring:
IDC terminals for leads H05V-U 0.5
tw 130
Protection class I

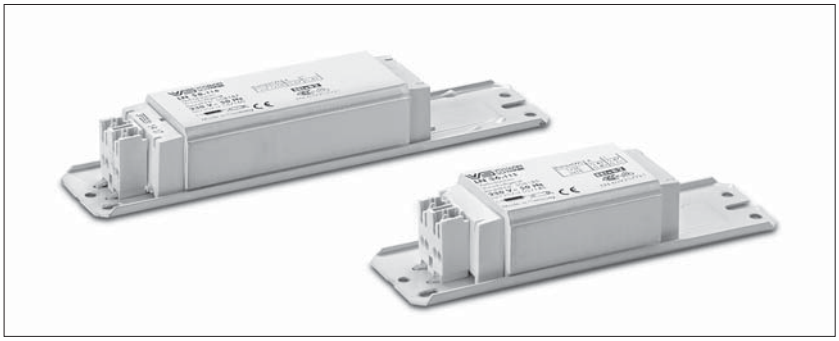

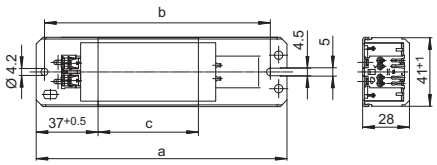

Lamp				Ballast									Capacitor	
Output W	Type	Base	Current mA	Type	**Ref. No.**	Voltage V, Hz	a mm	b mm	c mm	Weight kg	$\Delta t/\Delta t_{an.}$ K	Energy efficiency*	C_P µF	Current mA
230 V, 50 Hz														
14	T8 (T26)	G13	395	LN 18.510	**164572**	230, 50	155	140	92	0.80	40/65	B2	4.5	150
15	T8 (T26)	G13	310	LN 15.329	**163861**	230, 50	150	140	60	0.55	50/80	B2	3.5	120
2x15	T8 (T26)	G13	340	LN 30.801	**169645**	230, 50	150	140	60	0.55	55/110	B2	4.0	185
				L 30.347**	**164033**	230, 50	150	140	60	0.55	60/150	–	4.0	185
16	T8 (T26)	G13	200	LN 16.316	**163730**	230, 50	85	75	34	0.32	60/125	B1	2.0	90
18/20	T8 (T26)/T12 (T38)	G13	370	LN 18.510	**164572**	230, 50	155	140	92	0.80	40/65	B1	4.5	120
				LN 18.131	**530941**	230, 50	150	140	60	0.55	55/95	B2	4.5	120
				L 18.934**	**534621**	230, 50	150	140	45	0.43	70/150	–	4.5	120
2x18/20	T8 (T26)/T12 (T38)	G13	400	LN 2x18.135	**532155**	230, 50	150	140	45	0.43	65	B1	4.0	210
				L 36.334	**530007**	230, 50	150	140	60	0.55	60/155	B1	4.0	210
25	T12 (T38)	G13	290	L 25.346	**164013**	230, 50	150	140	60	0.55	45/80	B1	3.5	130
30	T8 (T26)	G13	365	LN 30.801	**169645**	230, 50	150	140	60	0.55	55/110	B2	4.5	180
36-1	T8 (T26)	G13	556	L 36l.342	**538072**	230, 50	195	180	100	0.87	50/120	B2	6.5	250
36/40	T8 (T26)/T12 (T38)	G13	430	LN 36.570	**169779**	230, 50	155	140	92	0.80	35/90	B1	4.5	210
				LN 36.511	**164590**	230, 50	155	140	92	0.80	35/95	B1	4.5	210
new				LN 36.130	**527191**	230, 50	150	140	60	0,55	50/140	B2	4.5	210
				LN 36.149	**529029**	230, 50	150	140	60	0.55	55/150	B2	4.5	210
new				L 36.132**	**535977**	230, 50	150	140	45	0.43	65	–	4.5	210
38	T8 (T26)	G13	430	LN 36.570	**169779**	230, 50	155	140	92	0.80	35/90	B1	4.5	210
				LN 36.511	**164590**	230, 50	155	140	92	0.80	35/95	B1	4.5	210
				LN 36.149	**529029**	230, 50	150	140	60	0.55	55/150	B2	4.5	210
new				L 36.132**	**535977**	230, 50	150	140	45	0.43	65	–	4.5	210
58/65	T8 (T26)/T12 (T38)	G13	670	LN 58.568	**169389**	230, 50	233	220	160	1.31	35/95	B1	7.0	320
				LN 58.189	**537038**	230, 50	190	180	100	0.87	50/125	B2	7.0	320
				LN 58.116	**508186**	230, 50	190	180	92	0.80	55/160	B2	7.0	320
				L 58.718**	**169658**	230, 50	190	180	92	0.80	60/170	–	7.0	320

* Energy efficiency: EEI=B2 and EEI=B1, valid until 2017

** Ballasts without CE mark for markets outside of the EU

Standard Ballasts
15–75 W, 240/220 V

For fluorescent lamps
Shape: 28 x 41 mm

Lamp				Ballast									Capacitor	
Output W	Type	Base	Current mA	Type	**Ref. No.**	Voltage V, Hz	a mm	b mm	c mm	Weight kg	$\Delta t/\Delta t_{an.}$ K	Energy efficiency*	C_P µF	Current mA
240 V, 50 Hz														
2x15	T8 (T26)	G13	340	LN 30.806	**533067**	240, 50	150	140	60	0.55	55/130	B2	4.0	185
16	T8 (T26)	G13	200	LN 16.417	**164358**	240, 50	85	75	34	0.32	60/130	B1	2.0	90
18/20	T8 (T26)/T12 (T38)	G13	370	LN 18.507	**164566**	240, 50	155	140	92	0.80	35/60	B1	4.5	120
				LN 18.162	**533043**	240, 50	150	140	60	0.55	60/110	B2	4.5	120
				L 18.936**	**534627**	240, 50	150	140	45	0.43	70/140	–	4.5	120
2x18/20	T8 (T26)/T12 (T38)	G13	400	LN 2x18.135	**535778**	240, 50	150	140	45	0.43	65	B1	4.0	210
				L 36/40.443	**530008**	240, 50	150	140	60	0.55	65/155	B1	4.0	210
				LN 36.201	**527196**	240, 50	150	140	60	0.55	55/140	B1	4.0	210
				LN 36.505	**164555**	240, 50	155	140	92	0.80	40/95	B1	4.0	210
30	T8 (T26)	G13	365	LN 30.806	**533067**	240, 50	150	140	60	0.55	55/130	B2	4.5	180
36/40	T8 (T26)/T12 (T38)	G13	430	LN 36.505	**164555**	240, 50	155	140	92	0.80	40/95	B1	4.5	210
				LN 36.201	**527196**	240, 50	150	140	60	0.55	55/140	B2	4.5	210
				L 36/40.443**	**164438**	240, 50	150	140	60	0.55	65/155	–	4.5	210
38	T8 (T26)	G13	430	LN 36.505	**164555**	240, 50	155	140	92	0.80	40/95	B1	4.5	210
				LN 36.201	**527196**	240, 50	150	140	60	0.55	55/140	B2	4.5	210
				L 36/40.443**	**164438**	240, 50	150	140	60	0.55	65/155	–	4.5	210
58/65	T8 (T26)/T12 (T38)	G13	670	LN 58.506	**164560**	240, 50	233	220	160	1.31	35/85	B1	7.0	320
				LN 58.190	**537056**	240, 50	190	180	100	0.87	50/150	B2	7.0	320
				LN 58.722	**534252**	240, 50	190	180	92	0.80	60/180	B2	7.0	320
70/75	T8 (T26)/T12 (T38)	G13	670	LN 75.170	**538603**	240, 50	190	180	100	0.87	55/160	B2	6.0	320
220 V, 50 Hz														
new	18/20	T8 (T26)/T12 (T38)	G13	370	L 18.933	**534624**	220, 50	150	140	45	0.43	70/160	–	4.5	120
new	2x18/20	T8 (T26)/T12 (T38)	G13	430	L 36.158	**530252**	220, 50	150	140	45	0.43	65	–	4.0	210
new	36/40	T8 (T26)/T12 (T38)	G13	430	L 36.158	**530252**	220, 50	150	140	45	0.43	65	–	4.5	210
new	38	T8 (T26)	G13	430	L 36.158	**530252**	220, 50	150	140	45	0.43	65	–	4.5	210
new	58/65	T8 (T26)/T12 (T38)	G13	670	L 58.625	**164828**	220, 50	190	180	92	0.80	55/155	–	7.0	320
220 V, 60 Hz														
	15	T8 (T26)	G13	310	L 15.007	**537744**	220, 60	150	140	45	0.43	55/80	–	3.0	120
new	2x15	T8 (T26)	G13	350	L 30.006	**537750**	220, 60	150	140	45	0.43	60/120	–	4.0	185
	18/20	T8 (T26)/T12 (T38)	G13	370	L 18.121	**532149**	220, 60	110	100	45	0.42	65/145	–	4.0	190
new					L 18.121	**528582**	220, 60	150	140	45	0.43	65/145	-	4.0	190
					L 18.149	**538801**	220, 60	150	140	34	0.32	75/140	–	4.0	190
	2x18/20	T8 (T26)/T12 (T38)	G13	430	L 36.120	**509373**	220, 60	150	140	45	0.43	60/170	–	4.0	220
	30	T8 (T26)	G13	365	L 30.006	**537750**	220, 60	150	140	45	0.43	60/120	–	4.0	180
	36/40	T8 (T26)/T12 (T38)	G13	430	L 36.120	**509373**	220, 60	150	140	45	0.43	60/170	–	4.0	220
	38	T8 (T26)	G13	430	L 36.120	**509373**	220, 60	150	140	45	0.43	60/170	–	4.0	230
	58/65	T8 (T26)/T12 (T38)	G13	670	L 58.657	**164870**	220, 60	195	180	92	0.80	55/140	–	6.0	320

* Energy efficiency: EEI=B2 and EEI=B1, valid until 2017

** Ballasts without CE mark for markets outside of the EU

Super-thin Ballasts
4–40 W
230/240 V

For fluorescent lamps
Shape: 18 x 41 mm

Vacuum-impregnated with polyester resin
Push-in terminal for leads: 0.5–1.5 mm²
With earth screw
tw 130
Protection class I

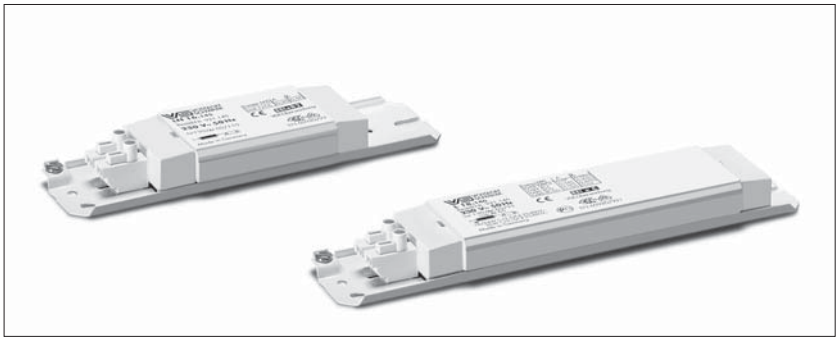

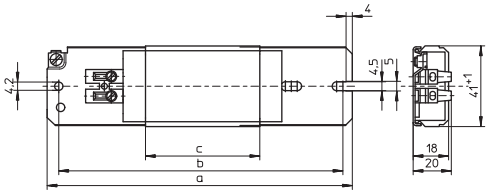

Lamp				Ballast									Capacitor	
Output	Type	Base	Current	Type	**Ref. No.**	Voltage	a	b	c	Weight	$\Delta t/\Delta t_{an.}$	Energy efficiency*	C_P	Current
W			mA			V, Hz	mm	mm	mm	kg	K		µF	mA
230 V, 50 Hz														
4	T5 (T16)	G5	170	L 4/6/8.142	**163062**	230, 50	155	140	58	0.37	45/65	B2	2.0	40
2x4	T5 (T16)	G5	155	L 4/6/8.142	**163062**	230, 50	155	140	58	0.37	45/65	B2	2.0	50
6	T5 (T16)	G5	160	L 4/6/8.142	**163062**	230, 50	155	140	58	0.37	45/65	B2	2.0	50
2x6	T5 (T16)	G5	175	LN 13.143	**163071**	230, 50	155	140	58	0.37	45/70	B2	2.0	65
8	T5 (T16)	G5	145	L 4/6/8.142	**163062**	230, 50	155	140	58	0.37	45/65	B1	2.0	60
2x8	T5 (T16)	G5	155	LN 13.143	**163071**	230, 50	155	140	58	0.37	45/70	B2	2.0	85
13	T5 (T16)	G5	165	LN 13.143	**163071**	230, 50	155	140	58	0.37	45/70	B2	2.0	80
15	T8 (T26)	G13	310	LN 15.144	**526594**	230, 50	195	180	116	0.64	45/80	B2	3.5	120
2x15	T8 (T26)	G13	340	LN 30.148	**525809**	230, 50	195	180	116	0.64	45/95	B2	4.0	185
16	T8 (T26)	G13	200	LN 16.145	**163084**	230, 50	155	140	58	0.37	50/110	B2	2.0	90
18/20	T8 (T26)/T12 (T38)	G13	370	LN 18.220	**526592**	230, 50	195	180	116	0.70	55/80	B2	4.5	120
2x18/20	T8 (T26)/T12 (T38)	G13	400	LN 36.221	**526593**	230, 50	195	180	116	0.70	50/125	B2	4.0	210
30	T8 (T26)	G13	365	LN 30.148	**525809**	230, 50	195	180	116	0.64	45/95	B2	4.5	180
36/40	T8 (T26)/T12 (T38)	G13	430	LN 36.221	**526593**	230, 50	195	180	116	0.70	50/125	B2	4.5	210
38	T8 (T26)	G13	430	LN 36.221	**526593**	230, 50	195	180	116	0.70	50/125	B2	4.5	210
240 V, 50 Hz														
4	T5 (T16)	G5	170	L 4/6/8.109	**169414**	240, 50	155	140	58	0.37	55/75	B2	2.0	40
2x4	T5 (T16)	G5	155	L 4/6/8.109	**169414**	240, 50	155	140	58	0.37	55/75	B2	2.0	50
6	T5 (T16)	G5	160	L 4/6/8.109	**169414**	240, 50	155	140	58	0.37	55/75	B2	2.0	50
2x6	T5 (T16)	G5	175	L 13.111	**162966**	240, 50	155	140	58	0.37	55/85	B2	2.0	65
8	T5 (T16)	G5	145	L 4/6/8.109	**169414**	240, 50	155	140	58	0.37	55/75	B1	2.0	60
2x8	T5 (T16)	G5	155	L 13.111	**162966**	240, 50	155	140	58	0.37	55/85	B2	2.0	85
13	T5 (T16)	G5	165	L 13.111	**162966**	240, 50	155	140	58	0.37	55/85	B2	2.0	80
15	T8 (T26)	G13	310	LN 15.119	**529268**	240, 50	195	180	116	0.64	50/70	B2	3.5	120
2x15	T8 (T26)	G13	340	LN 30.120	**529269**	240, 50	195	180	116	0.64	50/100	B2	4.0	185
16	T8 (T26)	G13	200	L 16.113	**162976**	240, 50	155	140	58	0.37	45/110	B2	2.0	90
18	T8 (T26)/T12 (T38)	G13	370	LN 18.121	**529272**	240, 50	195	180	116	0.64	50/85	B2	4.5	120
2x18/20	T8 (T26)/T12 (T38)	G13	400	LN 36.124	**529273**	240, 50	195	180	116	0.64	55/140	B2	4.0	210
30	T8 (T26)	G13	365	LN 30.120	**529269**	240, 50	195	180	116	0.64	50/100	B2	4.5	180
36/40	T8 (T26)/T12 (T38)	G13	430	LN 36.124	**529273**	240, 50	195	180	116	0.64	55/140	B2	4.5	210
38	T8 (T26)	G13	430	LN 36.124	**529273**	240, 50	195	180	116	0.64	55/140	B2	4.5	210

* Energy efficiency: EEI=B2 and EEI=B1, valid until 2017

Super-thin Ballasts 6–40 W, 220 V

For fluorescent lamps
Shape: 18 x 41 mm

Lamp				Ballast									Capacitor	
Output W	Type	Base	Current mA	Type	**Ref. No.**	Voltage V, Hz	a mm	b mm	c mm	Weight kg	$\Delta t/\Delta t_{an.}$ K	Energy efficiency*	C_P µF	Current mA
220 V, 60 Hz														
2x6	T5 (T16)	G5	175	L 13.164	**163162**	220, 60	155	140	58	0.37	40/80	–	2.0	65
2x8	T5 (T16)	G5	155	L 13.164	**163162**	220, 60	155	140	58	0.37	40/80	–	2.0	85
13	T5 (T16)	G5	165	L 13.164	**163162**	220, 60	155	140	58	0.37	40/80	–	2.0	80
15	T8 (T26)	G13	310	L 15.201	**163234**	220, 60	195	180	116	0.64	50/80	–	3.0	120
16	T8 (T26)	G13	200	L 16.202	**163235**	220, 60	155	140	58	0.37	45/110	–	2.0	90
18/20	T8 (T26)/T12 (T38)	G13	370	L 18.140	**163045**	220, 60	195	180	116	0.64	55/80	–	4.0	190
2x18/20	T8 (T26)/T12 (T38)	G13	400	L 36.188	**163218**	220, 60	195	180	116	0.64	45/110	–	4.0	210
36/40	T8 (T26)/T12 (T38)	G13	430	L 36.188	**163218**	220, 60	195	180	116	0.64	45/110	–	4.0	220
38	T8 (T26)	G13	430	L 36.188	**163218**	220, 60	195	180	116	0.64	45/110	–	4.0	230

* Energy efficiency: EEI=B2 and EEI=B1, valid until 2017

Slim Ballasts 4–65 W 230/240/220 V

For fluorescent lamps
Shape: 28 x 28 mm

Vacuum-impregnated with polyester resin
Push-in terminal for leads: 0.5–1 mm²
For the automatic luminaire wiring:
IDC terminals for leads H05V-U 0.5
tw 130
Protection class I

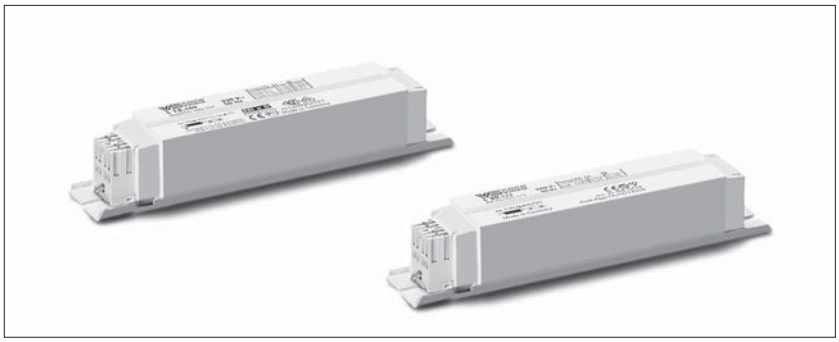

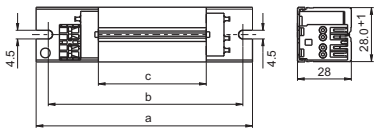

Lamp				Ballast									Capacitor	
Output W	Type	Base	Current mA	Type	**Ref. No.**	Voltage V, Hz	a mm	b mm	c mm	Weight kg	$\Delta t/\Delta t_{an.}$ K	Energy efficiency*	C_P µF	Current mA
230 V, 50 Hz														
4	T5 (T16)	G5	170	L 4/6/8.132	**505712**	230, 50	130	120	52	0.34	50/70	B2	2.0	40
2x4	T5 (T16)	G5	155	L 4/6/8.132	**505712**	230, 50	130	120	52	0.34	50/70	B2	2.0	50
6	T5 (T16)	G5	160	L 4/6/8.132	**505712**	230, 50	130	120	52	0.34	50/70	B2	2.0	50
2x6	T5 (T16)	G5	175	LN 13.134	**179466**	230, 50	130	120	52	0.34	50/80	B2	2.0	65

* Energy efficiency: EEI=B2 and EEI=B1, valid until 2017

Slim Ballasts 4–65 W, 230/240/220 V

For fluorescent lamps
Shape: 28 x 28 mm

Lamp				Ballast									Capacitor	
Output W	Type	Base	Current mA	Type	**Ref. No.**	Voltage V, Hz	a mm	b mm	c mm	Weight kg	$\Delta t/\Delta t_{an.}$ K	Energy efficiency*	C_P µF	Current mA
230 V, 50 Hz														
8	T5 (T16)	G5	145	L 4/6/8.132	**505712**	230, 50	130	120	52	0.34	50/70	B1	2.0	60
2x8	T5 (T16)	G5	155	LN 13.134	**179466**	230, 50	130	120	52	0.34	50/80	B2	2.0	85
10	T8 (T26)	G13	170	LN 10.145	**505628**	230, 50	130	120	52	0.34	50/80	B2	2.0	75
13	T5 (T16)	G5	165	LN 13.134	**179466**	230, 50	130	120	52	0.34	50/80	B2	2.0	80
15	T8 (T26)	G13	310	L 15.107	**162860**	230, 50	150	140	102	0.60	50/80	B2	3.5	120
2x15	T8 (T26)	G13	340	LN 30.128	**526595**	230, 50	190	180	120	0.70	45/85	B2	4.0	185
16	T8 (T26)	G13	200	LN 16.135	**505607**	230, 50	130	120	52	0.34	50/125	B2	2.0	90
18/20	T8 (T26)/T12 (T38)	G13	370	LN 18.127	**526596**	230, 50	190	180	120	0.70	45/80	B2	4.5	120
2x18/20	T8 (T26)/T12 (T38)	G13	400	LN 36.172	**526597**	230, 50	190	180	120	0.70	50/130	B2	4.0	210
30	T8 (T26)	G13	365	LN 30.128	**526595**	230, 50	190	180	120	0.70	45/85	B2	4.5	180
36/40	T8 (T26)/T12 (T38)	G13	430	LN 36.172	**526597**	230, 50	190	180	120	0.70	50/130	B2	4.5	210
38	T8 (T26)	G13	430	LN 36.172	**526597**	230, 50	190	180	120	0.70	50/130	B2	4.5	210
58/65	T8 (T26)/T12 (T38)	G13	670	LN 58TD.120**	**529685**	230, 50	190	180	120	0.70	30/100	B2	7.0	320
240 V, 50 Hz														
4	T5 (T16)	G5	170	L 4/6/8.133	**179414**	240, 50	130	120	52	0.34	50/70	B2	2.0	40
2x4	T5 (T16)	G5	155	L 4/6/8.133	**179414**	240, 50	130	120	52	0.34	50/70	B2	2.0	50
6	T5 (T16)	G5	160	L 4/6/8.133	**179414**	240, 50	130	120	52	0.34	50/70	B1	2.0	50
2x6	T5 (T16)	G5	175	L 13.129	**179258**	240, 50	130	120	52	0.34	55/80	B2	2.0	65
8	T5 (T16)	G5	145	L 4/6/8.133	**179414**	240, 50	130	120	52	0.34	50/70	B1	2.0	60
2x8	T5 (T16)	G5	155	L 13.129	**179258**	240, 50	130	120	52	0.34	55/80	B2	2.0	85
13	T5 (T16)	G5	165	L 13.129	**179258**	240, 50	130	120	52	0.34	55/80	B2	2.0	80
15	T8 (T26)	G13	310	LN 15.116	**528753**	240, 50	150	140	102	0.60	50/80	B2	3.5	120
2x15	T8 (T26)	G13	340	LN 30.117	**528755**	240, 50	150	140	102	0.60	55/125	B2	4.0	185
				LN 30.117	**529632**	240, 50	190	180	102	0.60	55/125	B2	4.0	185
16	T8 (T26)	G13	200	LN 16.146	**505629**	240, 50	130	120	52	0.34	55/125	B2	2.0	90
18	T8 (T26)	G13	200	LN 18.173	**529066**	240, 50	190	180	120	0.70	45/80	B2	4.5	120
2x18/20	T8 (T26)/T12 (T38)	G13	400	LN 36.174	**529071**	240, 50	190	180	120	0.70	50/135	B2	4.0	210
30	T8 (T26)	G13	365	LN 30.117	**528755**	240, 50	150	140	102	0.60	55/125	B2	4.5	180
				LN 30.117	**529632**	240, 50	190	180	102	0.60	55/125	B2	4,.5	180
36/40	T8 (T26)/T12 (T38)	G13	430	LN 36.174	**529071**	240, 50	190	180	120	0.70	50/135	B2	4.5	210
38	T8 (T26)	G13	430	LN 36.174	**529071**	240, 50	190	180	120	0.70	50/135	B2	4.5	210
58	T8 (T26)/T12 (T38)	G13	670	LN 58TD.175**	**529689**	240, 50	190	180	120	0.70	35/110	B2	7.0	320
220 V, 60 Hz														
4	T5 (T16)	G5	170	L 4/6/8.493	**539614**	220, 60	130	120	52	0.34	45/60	–	2.0	40
2x4	T5 (T16)	G5	155	L 4/6/8.493	**539614**	220, 60	130	120	52	0.34	45/60	–	2.0	50
6	T5 (T16)	G5	160	L 4/6/8.493	**539614**	220, 60	130	120	52	0.34	45/60	–	2.0	50
2x6	T5 (T16)	G5	175	L 13.136	**505608**	220, 60	130	120	52	0.34	50/80	–	2.0	65
8	T5 (T16)	G5	145	L 4/6/8.493	**539614**	220, 60	130	120	52	0.34	45/60	–	2.0	60
2x8	T5 (T16)	G5	155	L 13.136	**505608**	220, 60	130	120	52	0.34	50/80	–	2.0	85
13	T5 (T16)	G5	165	L 13.136	**505608**	220, 60	130	120	52	0.34	50/80	–	2.0	80
16	T8 (T26)	G13	200	LN 16.188	**539981**	220, 60	150	140	52	0.34	55/110	–	2.0	90
18/20	T8 (T26)/T12 (T38)	G13	370	L 20.148	**505768**	220, 60	150	140	102	0.60	55/85	–	4.0	120
2x18/20	T8 (T26)/T12 (T38)	G13	400	L 36.126	**170009**	220, 60	150	140	102	0.60	55/125	–	4.0	210
36/40	T8 (T26)/T12 (T38)	G13	430	L 36.126	**170009**	220, 60	150	140	102	0.60	55/125	–	4.0	210
38	T8 (T26)	G13	430	L 36.126	**170009**	220, 60	150	140	102	0.60	55/125	–	4.0	210
58/65	T8 (T26)/T12 (T38)	G13	670	L 58/65.149	**507213**	220, 60	230	220	178	1.00	60/140	–	6.0	320

* Energy efficiency: EEI=B2 and EEI=B1, valid until 2017

** TD = halfchoke (two ballasts per lamp are necessary)

Ballasts
14–20 W, 120 V
60 Hz

For fluorescent lamps
Shape: 28 x 41 mm

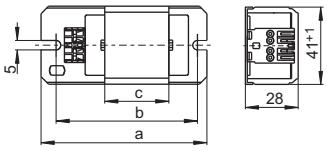



Vacuum-impregnated with polyester resin
Push-in terminal for leads: 0.5–1 mm²
For the automatic luminaire wiring:
IDC terminals for leads H05V-U 0.5
tw 130
Protection class I

Lamp				Ballast								Capacitor	
Output W	Type	Base	Current mA	Type	**Ref. No.**	Voltage V, Hz	a mm	b mm	c mm	Weight kg	$\Delta t/\Delta t_{an.}$ K	C_P µF	Current mA
120 V, 60 Hz													
14	T8 (T26)	G13	395	L 14.139	**170117**	120, 60	85	75	34	0.32	55/90	7.0	175
15	T8 (T26)	G13	350	L 15.308	**163702**	120, 60	85	75	34	0.32	35/65	7.0	170
new 18/20	T8 (T26)/T12 (T38)	G13	370	L 20.122	**163256**	120, 60	85	75	34	0.32	35/80	5.0	190

Operating Units 6–40 W, 120 V 60 Hz

For fluorescent lamps
Shape: 33 x 41 mm

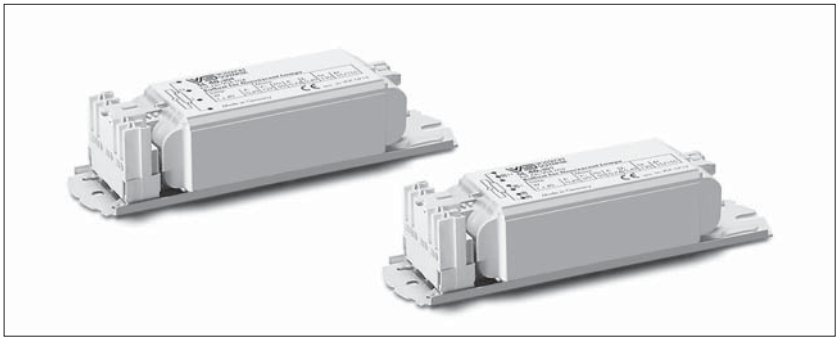

Vacuum-impregnated with polyester resin
Push-in terminal for leads: 0.5–1.5 mm²
For the automatic luminaire wiring:
IDC terminals for leads H05V-U 0.5
tw 130
Protection class I

These units are a combination of transformers/ ballasts (high-reactance transformers) which supply the lamp with the necessary operating voltage. For these units a usual starter (220–240 V) is necessary.

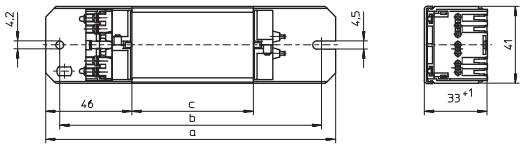

Lamp				Ballast								Capacitor	
Output W	Type	Base	Current mA	Type	**Ref. No.**	Voltage V, Hz	a mm	b mm	c mm	Weight kg	$\Delta t/\Delta t_{an.}$ K	C_P µF	Current mA
120 V, 60 Hz													
2x6	T5 (T16)	G5	155	SL 13.331	**169496**	120, 60	125	110	40	0.47	50/80	7.0	160
2x8	T5 (T16)	G5	155	SL 13.331	**169496**	120, 60	125	110	40	0.47	50/80	7.0	165
13	T5 (T16)	G5	165	SL 13.331	**169496**	120, 60	125	110	40	0.47	50/80	7.0	170
2x15	T8 (T26)	G13	330	SL 30.315	**160374**	120, 60	155	140	80	0.86	45/110	12.0	340
2x18	T8 (T26)	G13	370	SL 36.342	**506405**	120, 60	155	140	65	0.71	75/175	16.0	400
2x20	T12 (T38)	G13	370	SL 40.333	**169546**	120, 60	155	140	65	0.71	55/155	16.0	400
30	T8 (T26)	G13	365	SL 30.315	**160374**	120, 60	155	140	80	0.86	45/110	12.0	350
36	T8 (T26)	G13	430	SL 36.342	**506405**	120, 60	155	140	65	0.71	75/175	16.0	410
38	T8 (T26)	G13	430	SL 36.342	**506405**	120, 60	155	140	65	0.71	75/175	16.0	430
40	T12 (T38)	G13	430	SL 40.333	**169546**	120, 60	155	140	65	0.71	55/155	16.0	420

COMPACT AND VERSATILE

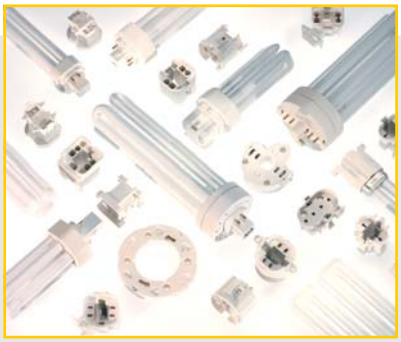



VS LAMPHOLDERS FOR COMPACT FLUORESCENT LAMPS

Vossloh-Schwabe provides a broad range of lampholders for single-ended compact fluorescent lamps, with regard to which the numerous fixing methods make just about any luminaire design possible.

As compact fluorescent lamps generate considerably less heat in comparison to incandescent lamps, the advantages provided by thermoplastics can be fully utilized for lampholder design.

Almost all VS lampholders for compact fluorescent lamps are made of thermoplastic PBT and therefore bear the T marking T140, which refers to the maximum base temperature in accordance with EN 61199 (VDE 0715 T9). The use of this highly heat-resistant material was born of close cooperation between Vossloh-Schwabe and the world's leading lamp manufacturers that also use PBT for producing lamp bases. In connection with fatigue-resistant, stainless steel lamp mounting springs, harmonizing the casing material ensures a permanent and secure lamp fit.

4 Lampholders and Accessories for TC Lamps

G24, GX24 lampholders **284–291**

2G7 lampholders **292**

2G8 lampholders **293**

G23 lampholders **293–296**

GR8, GR10q, GRY10q-3, GRZ10d, GRZ10t lampholders **296–297**

2G10 lampholders **297**

2G11/2GX11 lampholders **298–299**

Accessories **300–302**

GX53-1 lampholders, accessories **303–304**

Technical details for fluorescent lamps **350–379**
General technical details 533 - 540
Glossary 541 - 543

G24, GX24 Lampholders

For single-ended compact fluorescent lamps TC-D, TC-T, TC-DEL, TC-TEL

The drawings and photos contained in this chapter only show lampholders for lamps with base G24q-1. Further drawings of lamp bases can be found on page 373.

When mounting the lampholder it has to be considered that the TC-T and TC-TEL lamp is wider than the lampholder. When using the central hole for mounting additional depressions for anti-rotation pips have to be provided.

G24, GX24 lampholders
Plain casing
Casing: PBT GF, white, T140
Nominal rating: 2/500
Push-in twin terminals: 0.5–1 mm² (lamp circuit)
In addition for G24q, GX24q lampholders:
push-in terminals: 0.5–1 mm² (starter circuit)
Rear fixing holes for self-tapping screws
acc. to ISO 1481/7049-ST4.2-C/F
Front fixing holes for screws M3
Central fixing hole for screw M3
Rotation stop
For cover caps (see p. 433–435)

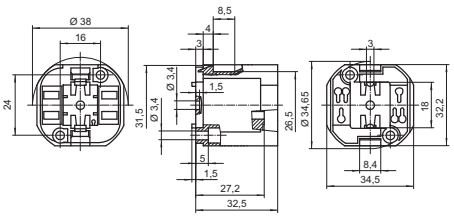



Type	**Ref. No.**	Base	Lamp	Output (W)	Weight (g)	Unit (pcs.)
71501	**527735**	G24d-1/GX24d-1	TC-D/TC-T	10, 13 / 13	13	500
71502	**527736**	G24d-2/GX24d-2	TC-D/TC-T	18 / 18	13	500
71503	**527737**	G24d-3/GX24d-3	TC-D/TC-T	26 / 26	13	500
71511	**527739**	G24q-1/GX24q-1	TC-DEL/TC-TEL	10, 13 / 13	14.5	500
71512	**527740**	G24q-2/GX24q-2	TC-DEL/TC-TEL	18 / 18	14.5	500
71513	**527741**	G24q-3/GX24q-3	TC-DEL/TC-TEL	26 / 26, 32	14.5	500
71519	**527745**	GX24q-3/-4*	TC-TEL	26, 32 / 42	14.5	500
71514	**527742**	GX24q-4	TC-TEL	42	14.5	500
71515	**527743**	GX24q-5	TC-TEL	57	15.1	500
71516	**527744**	GX24q-6	TC-TEL	70	15.1	500

* Lampholder 527745 may only be used in luminaires that are operated with electronic ballasts that have been certified according to the applicable standards and that cover the luminaire performance range of 26, 32 and 42 W.

G24, GX24 lampholders
External thread 40x2.5 IEC 60399
Casing: PBT GF, white, T140
Nominal rating: 2/500
Push-in twin terminals: 0.5–1 mm² (lamp circuit)
In addition for G24q, GX24q lampholders:
push-in terminals: 0.5–1 mm² (starter circuit)
Rear fixing holes for self-tapping screws
acc. to ISO 1481/7049-ST4.2-C/F
Front fixing holes for screws M3
Central fixing hole for screw M3
Rotation stop
For cover caps (see p. 433–435)
For screw rings (see p. 451)

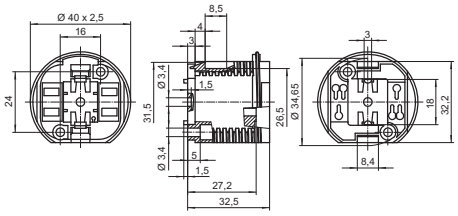



Type	**Ref. No.**	Base	Lamp	Output (W)	Weight (g)	Unit (pcs.)
71001	**527502**	G24d-1/GX24d-1	TC-D/TC-T	10, 13 / 13	12.7	500
71002	**527503**	G24d-2/GX24d-2	TC-D/TC-T	18 / 18	12.7	500
71003	**527504**	G24d-3/GX24d-3	TC-D/TC-T	26 / 26	12.7	500
71011	**527506**	G24q-1/GX24q-1	TC-DEL/TC-TEL	10, 13 / 13	15.2	500
71012	**527507**	G24q-2/GX24q-2	TC-DEL/TC-TEL	18 / 18	15.2	500
71013	**527508**	G24q-3/GX24q-3	TC-DEL/TC-TEL	26 / 26, 32	15.2	500
71019	**527512**	GX24q-3/-4*	TC-TEL	26, 32 / 42	15.2	500
71014	**527509**	GX24q-4	TC-TEL	42	15.2	500
71015	**527510**	GX24q-5	TC-TEL	57	15.8	500
71016	**527511**	GX24q-6	TC-TEL	70	15.8	500

* Lampholder 527512 may only be used in luminaires that are operated with electronic ballasts that have been certified according to the applicable standards and that cover the luminaire performance range of 26, 32 and 42 W.

G24, GX24 lampholders
External thread 40x2.5 IEC 60399
Casing: PBT GF, white T140
Nominal rating: 2/500
Push-in twin terminals: 0.5–1 mm² (lamp circuit)
In addition for G24q, GX24q lampholders:
push-in terminals: 0.5–1 mm² (starter circuit)
Front fixing holes for screws M3
Central fixing hole for screw M3
Rotation stop
For cover caps (see p. 433–435)
For screw rings (see p. 451)

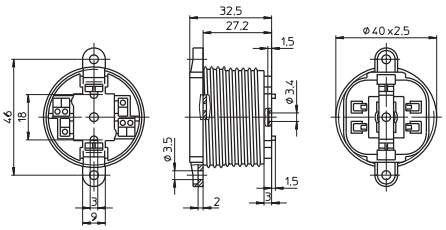



Type	**Ref. No.**	Base	Lamp	Output (W)	Weight (g)	Unit (pcs.)
35812	**101410**	G24d-1/GX24d-1	TC-D/TC-T	10, 13 / 13	18	500
35842	**106262**	G24d-2/GX24d-2	TC-D/TC-T	18 / 18	18	500
35862	**101448**	G24d-3/GX24d-3	TC-D/TC-T	26 / 26	18	500
35912	**106912**	G24q-1/GX24q-1	TC-DEL/TC-TEL	10, 13 / 13	19.5	500
35942	**502555**	G24q-2/GX24q-2	TC-DEL/TC-TEL	18 / 18	19.5	500
35962	**502556**	G24q-3/GX24q-3	TC-DEL/TC-TEL	26 / 26, 32	19.5	500

G24, GX24 lampholders
Profiled shape
Casing: PBT GF, white, T140
Nominal rating: 2/500
Push-in twin terminals: 0.5 – 1 mm² (lamp circuit)
In addition for G24q, GX24q lampholders:
push-in terminals: 0.5 – 1 mm² (starter circuit)
Central fixing hole for screw M3
Rotation stop

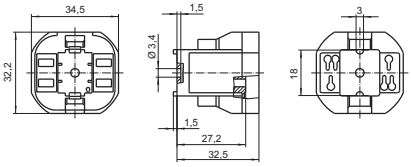



Type	Ref. No.	Base	Lamp	Output (W)	Weight (g)	Unit (pcs.)
71101	**527529**	G24d-1/GX24d-1	TC-D/TC-T	10, 13 / 13	8.5	500
71102	**527530**	G24d-2/GX24d-2	TC-D/TC-T	18 / 18	8.5	500
71103	**527531**	G24d-3/GX24d-3	TC-D/TC-T	26 / 26	8.5	500
71111	**527533**	G24q-1/GX24q-1	TC-DEL/TC-TEL	10, 13 / 13	10.9	500
71112	**527534**	G24q-2/GX24q-2	TC-DEL/TC-TEL	18 / 18	10.9	500
71113	**527535**	G24q-3/GX24q-3	TC-DEL/TC-TEL	26 / 26, 32	10.9	500
71119	**527539**	GX24q-3/-4*	TC-TEL	26, 32 / 42	10.9	500
71114	**527536**	GX24q-4	TC-TEL	42	10.9	500
71115	**527537**	GX24q-5	TC-TEL	57	11.1	500
71116	**527538**	GX24q-6	TC-TEL	70	11.1	500

* Lampholder 527539 may only be used in luminaires that are operated with electronic ballasts that have been certified according to the applicable standards and that cover the luminaire performance range of 26, 32 and 42 W.

G24, GX24 push-fit lampholders
Lamp position: 45°
Casing: PBT GF, white, T140
Nominal rating: 2/500
Push-in twin terminals: 0.5 – 1 mm² (lamp circuit)
In addition for G24q, GX24q lampholders:
push-in terminals: 0.5 – 1 mm² (starter circuit)
Push-fit foot for cut-out 10 x 20 mm
for wall thickness 0.6 – 1 mm
Foot with facility for cable routing

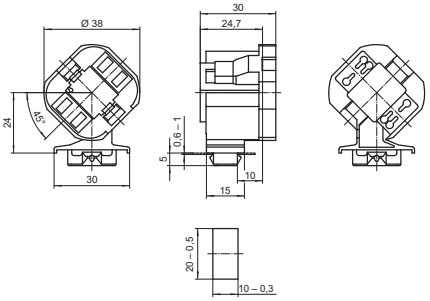



Type	Ref. No.	Base	Lamp	Output (W)	Weight (g)	Unit (pcs.)
71301	**527585**	G24d-1/GX24d-1	TC-D/TC-T	10, 13 / 13	10.2	500
71302	**527586**	G24d-2/GX24d-2	TC-D/TC-T	18 / 18	10.2	500
71303	**527587**	G24d-3/GX24d-3	TC-D/TC-T	26 / 26	10.2	500
71311	**527589**	G24q-1/GX24q-1	TC-DEL/TC-TEL	10, 13 / 13	12.1	500
71312	**527590**	G24q-2/GX24q-2	TC-DEL/TC-TEL	18 / 18	12.1	500
71313	**527591**	G24q-3/GX24q-3	TC-DEL/TC-TEL	26 / 26, 32	12.1	500
71319	**527596**	GX24q-3/-4*	TC-TEL	26, 32 / 42	12.1	500
71314	**527592**	GX24q-4	TC-TEL	42	12.1	500
71315	**527594**	GX24q-5	TC-TEL	57	12.6	500
71316	**527595**	GX24q-6	TC-TEL	70	12.6	500

* Lampholder 527596 may only be used in luminaires that are operated with electronic ballasts that have been certified according to the applicable standards and that cover the luminaire performance range of 26, 32 and 42 W.

G24 push-fit lampholders
Lamp position: 45°
Casing: PBT GF, white, T140
Nominal rating: 2/500
Push-in twin terminals: 0.5–1 mm² (lamp circuit)
In addition for G24q lampholders:
push-in terminals: 0.5–1 mm² (starter circuit)
Split pins for wall thickness up to 1.2 mm

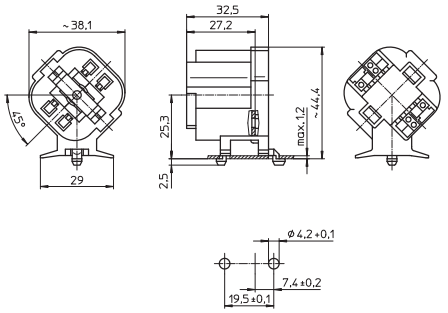



Type	Ref. No.	Base	Lamp	Output (W)	Weight (g)	Unit (pcs.)
35814	**106893**	G24d-1	TC-D	10, 13	14.3	500
35844	**107617**	G24d-2	TC-D	18	14.3	500
35864	**107618**	G24d-3	TC-D	26	14.3	500
35914	**107861**	G24q-1	TC-DEL	10, 13	15	500
35944	**108575**	G24q-2	TC-DEL	18	15	500
35964	**108576**	G24q-3	TC-DEL	26	15	500

G24, GX24 push-fit lampholders
Casing: PBT GF, white, T140
Nominal rating: 2/500
Push-in twin terminals: 0.5–1 mm² (lamp circuit)
In addition for G24q, GX24q lampholders:
push-in terminals: 0.5–1 mm² (starter circuit)
Push-fit foot for cut-out 10x20 mm
for wall thickness 0.6–1 mm
Foot with facility for cable routing

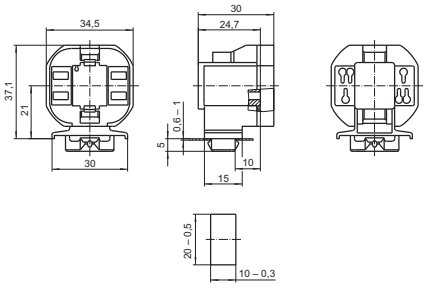



Type	Ref. No.	Base	Lamp	Output (W)	Weight (g)	Unit (pcs.)
71801	**528029**	G24d-1/GX24d-1	TC-D/TC-T	10, 13 / 13	10.2	500
71802	**528030**	G24d-2/GX24d-2	TC-D/TC-T	18 / 18	10.2	500
71803	**528031**	G24d-3/GX24d-3	TC-D/TC-T	26 / 26	10.2	500
71811	**528033**	G24q-1/GX24q-1	TC-DEL/TC-TEL	10, 13 / 13	12.1	500
71812	**528034**	G24q-2/GX24q-2	TC-DEL/TC-TEL	18 / 18	12.1	500
71813	**528035**	G24q-3/GX24q-3	TC-DEL/TC-TEL	26 / 26, 32	12.1	500
71819	**528039**	GX24q-3/-4*	TC-TEL	26, 32 / 42	12.1	500
71814	**528036**	GX24q-4	TC-TEL	42	12.1	500
71815	**528037**	GX24q-5	TC-TEL	57	12.7	500
71816	**528038**	GX24q-6	TC-TEL	70	12.7	500

* Lampholder 528039 may only be used in luminaires that are operated with electronic ballasts that have been certified according to the applicable standards and that cover the luminaire performance range of 26, 32 and 42 W.

G24, GX24 surface-mounted lampholders
Casing: PBT GF, white, T140, Nominal rating: 2/500
Push-in twin terminals: 0.5–1 mm² (lamp circuit)
In addition for G24q, GX24q lampholders:
push-in terminals: 0.5–1 mm² (starter circuit)
Base fixing holes for self-tapping screws
acc. to ISO 1481/7049-ST4.2-C/F
Base oblong holes for screws M4
Rear fixing holes for self-tapping screws
acc. to ISO 1481/7049-ST2.9-C/F
and ST4.2-C/F
Front fixing holes for screws M3

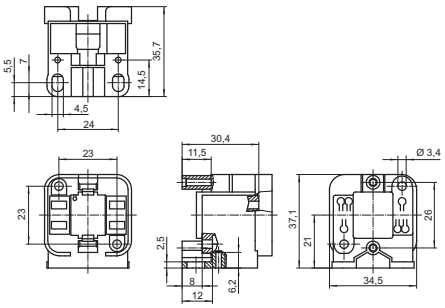

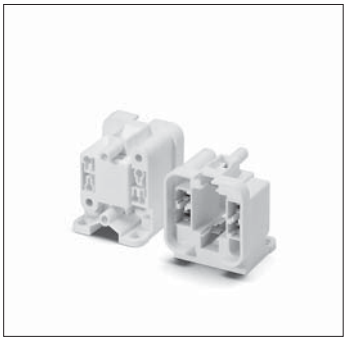

Type	**Ref. No.**	Base	Lamp	Output (W)	Weight (g)	Unit (pcs.)
71701	**527790**	G24d-1/GX24d-1	TC-D/TC-T	10, 13 / 13	13.2	500
71702	**527791**	G24d-2/GX24d-2	TC-D/TC-T	18 / 18	13.2	500
71703	**527792**	G24d-3/GX24d-3	TC-D/TC-T	26 / 26	13.2	500
71711	**527794**	G24q-1/GX24q-1	TC-DEL/TC-TEL	10, 13 / 13	15.2	500
71712	**527795**	G24q-2/GX24q-2	TC-DEL/TC-TEL	18 / 18	15.2	500
71713	**527796**	G24q-3/GX24q-3	TC-DEL/TC-TEL	26 / 26, 32	15.2	500
71719	**527800**	GX24q-3/-4*	TC-TEL	26, 32 / 42	15.2	500
71714	**527797**	GX24q-4	TC-TEL	42	15.2	500
71715	**527798**	GX24q-5	TC-TEL	57	15.8	500
71716	**527799**	GX24q-6	TC-TEL	70	15.8	500

* Lampholder 527800 may only be used in luminaires that are operated with electronic ballasts that have been certified according to the applicable standards and that cover the luminaire performance range of 26, 32 and 42 W.

G24, GX24 surface-mounted lampholders
Casing: PBT GF, white, T140
Nominal rating: 2/500
Push-in twin terminals: 0.5–1 mm² (lamp circuit)
In addition for G24q, GX24q lampholders:
push-in terminals: 0.5–1 mm² (starter circuit)
Front fixing holes for screws M3

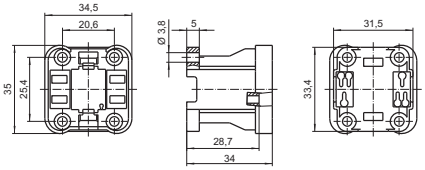



Type	**Ref. No.**	Base	Lamp	Output (W)	Weight (g)	Unit (pcs.)
71201	**527556**	G24d-1/GX24d-1	TC-D/TC-T	10, 13 / 13	12	500
71202	**527557**	G24d-2/GX24d-2	TC-D/TC-T	18 / 18	12	500
71203	**527558**	G24d-3/GX24d-3	TC-D/TC-T	26 / 26	12	500
71211	**527560**	G24q-1/GX24q-1	TC-DEL/TC-TEL	10, 13 / 13	12.9	500
71212	**527561**	G24q-2/GX24q-2	TC-DEL/TC-TEL	18 / 18	12.9	500
71213	**527562**	G24q-3/GX24q-3	TC-DEL/TC-TEL	26 / 26, 32	12.9	500
71219	**527566**	GX24q-3/-4*	TC-TEL	26, 32 / 42	12.9	500
71214	**527563**	GX24q-4	TC-TEL	42	12.9	500
71215	**527564**	GX24q-5	TC-TEL	57	13.5	500
71216	**527565**	GX24q-6	TC-TEL	70	13.5	500

* Lampholder 527566 may only be used in luminaires that are operated with electronic ballasts that have been certified according to the applicable standards and that cover the luminaire performance range of 26, 32 and 42 W.

G24, GX24 push-fit lampholders
Casing: PBT GF, white, T140
Nominal rating: 2/500
Push-in twin terminals: 0.5–1 mm² (lamp circuit)
In addition for G24q, GX24q lampholders:
push-in terminals: 0.5–1 mm² (starter circuit)
Base split pins for wall thickness 0.8–1.7 mm

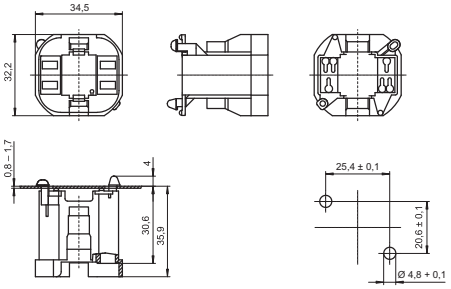

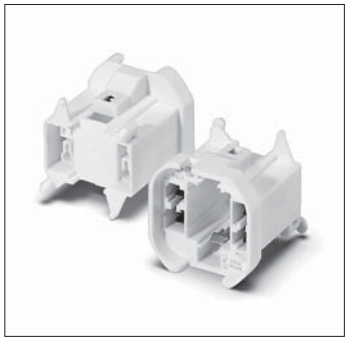

Type	Ref. No.	Base	Lamp	Output (W)	Weight (g)	Unit (pcs.)
71601	**527762**	G24d-1/GX24d-1	TC-D/TC-T	10, 13 / 13	10.5	500
71602	**527763**	G24d-2/GX24d-2	TC-D/TC-T	18 / 18	10.5	500
71603	**527764**	G24d-3/GX24d-3	TC-D/TC-T	26 / 26	10.5	500
71611	**527766**	G24q-1/GX24q-1	TC-DEL/TC-TEL	10, 13 / 13	12	500
71612	**527768**	G24q-2/GX24q-2	TC-DEL/TC-TEL	18 / 18	12	500
71613	**527769**	G24q-3/GX24q-3	TC-DEL/TC-TEL	26 / 26, 32	12	500
71619	**527773**	GX24q-3/-4*	TC-TEL	26, 32 / 42	12	500
71614	**527770**	GX24q-4	TC-TEL	42	12	500
71615	**527771**	GX24q-5	TC-TEL	57	12.6	500
71616	**527772**	GX24q-6	TC-TEL	70	12.6	500

* Lampholder 527773 may only be used in luminaires that are operated with electronic ballasts that have been certified according to the applicable standards and that cover the luminaire performance range of 26, 32 and 42W.

G24, GX24 push-fit lampholders
Casing: PBT GF, white, T140
Nominal rating: 2/500
Push-in twin terminals: 0.5–1 mm² (lamp circuit)
In addition for G24q, GX24q lampholders:
push-in terminals: 0.5–1 mm² (starter circuit)
Base split pins for wall thickness 0.8–1.7 mm

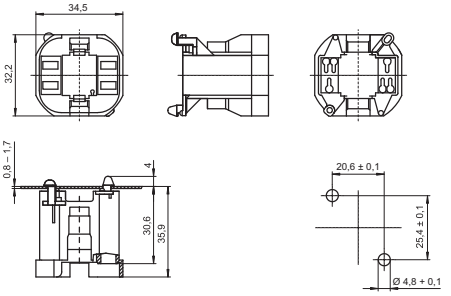

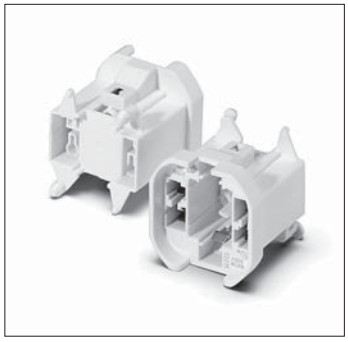

Type	Ref. No.	Base	Lamp	Output (W)	Weight (g)	Unit (pcs.)
72201	**530458**	G24d-1/GX24d-1	TC-D/TC-T	10, 13 / 13	10.5	500
72202	**530459**	G24d-2/GX24d-2	TC-D/TC-T	18 / 18	10.5	500
72203	**530460**	G24d-3/GX24d-3	TC-D/TC-T	26 / 26	10.5	500
72211	**530462**	G24q-1/GX24q-1	TC-DEL/TC-TEL	10, 13 / 13	12	500
72212	**530463**	G24q-2/GX24q-2	TC-DEL/TC-TEL	18 / 18	12	500
72213	**530464**	G24q-3/GX24q-3	TC-DEL/TC-TEL	26 / 26, 32	12	500
72219	**530468**	GX24q-3/-4*	TC-TEL	26, 32 / 42	12	500
72214	**530465**	GX24q-4	TC-TEL	42	12	500
72215	**530466**	GX24q-5	TC-TEL	57	12.6	500
72216	**530467**	GX24q-6	TC-TEL	70	12.6	500

* Lampholder 530468 may only be used in luminaires that are operated with electronic ballasts that have been certified according to the applicable standards and that cover the luminaire performance range of 26, 32 and 42W.

G24, GX24 push-fit lampholders
Casing: PBT GF, white, T140
Nominal rating: 2/500
Push-in twin terminals: 0.5–1 mm² (lamp circuit)
In addition for G24q, GX24q lampholders:
push-in terminals: 0.5–1 mm² (starter circuit)
Rear split pins for wall thickness 0.8–1.7 mm
Width of split pin: 6.5 mm

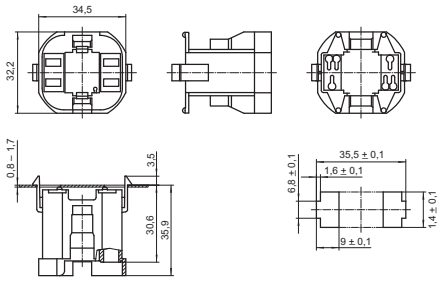



Type	Ref. No.	Base	Lamp	Output (W)	Weight (g)	Unit (pcs.)
72001	**528089**	G24d-1/GX24d-1	TC-D/TC-T	10, 13 / 13	10.4	500
72002	**528090**	G24d-2/GX24d-2	TC-D/TC-T	18 / 18	10.4	500
72003	**528091**	G24d-3/GX24d-3	TC-D/TC-T	26 / 26	10.4	500
72011	**528093**	G24q-1/GX24q-1	TC-DEL/TC-TEL	10, 13 / 13	12.3	500
72012	**528094**	G24q-2/GX24q-2	TC-DEL/TC-TEL	18 / 18	12.3	500
72013	**528095**	G24q-3/GX24q-3	TC-DEL/TC-TEL	26 / 26, 32	12.3	500
72019	**528099**	GX24q-3/-4*	TC-TEL	26, 32 / 42	12.3	500
72014	**528096**	GX24q-4	TC-TEL	42	12.3	500
72015	**528097**	GX24q-5	TC-TEL	57	12.9	500
72016	**528098**	GX24q-6	TC-TEL	70	12.9	500

* Lampholder 528099 may only be used in luminaires that are operated with electronic ballasts that have been certified according to the applicable standards and that cover the luminaire performance range of 26, 32 and 42 W.

G24, GX24 push-fit lampholders
Casing: PBT GF, white, T140
Nominal rating: 2/500
Push-in twin terminals: 0.5–1 mm² (lamp circuit)
In addition for G24q, GX24q lampholders:
push-in terminals: 0.5–1 mm² (starter circuit)
Rear split pins for wall thickness 0.8–1.7 mm
Width of split pin: 4.5 mm

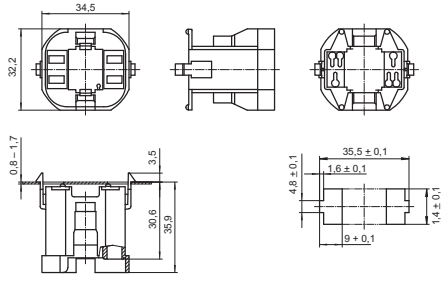



Type	Ref. No.	Base	Lamp	Output (W)	Weight (g)	Unit (pcs.)
72101	**528116**	G24d-1/GX24d-1	TC-D/TC-T	10, 13 / 13	10.4	500
72102	**528117**	G24d-2/GX24d-2	TC-D/TC-T	18 / 18	10.4	500
72103	**528118**	G24d-3/GX24d-3	TC-D/TC-T	26 / 26	10.4	500
72111	**528120**	G24q-1/GX24q-1	TC-DEL/TC-TEL	10, 13 / 13	12.3	500
72112	**528121**	G24q-2/GX24q-2	TC-DEL/TC-TEL	18 / 18	12.3	500
72113	**528122**	G24q-3/GX24q-3	TC-DEL/TC-TEL	26 / 26, 32	12.3	500
72119	**528126**	GX24q-3/-4*	TC-TEL	26, 32 / 42	12.3	500
72114	**528123**	GX24q-4	TC-TEL	42	12.3	500
72115	**528124**	GX24q-5	TC-TEL	57	12.9	500
72116	**528125**	GX24q-6	TC-TEL	70	12.9	500

* Lampholder 528126 may only be used in luminaires that are operated with electronic ballasts that have been certified according to the applicable standards and that cover the luminaire performance range of 26, 32 and 42 W.

G24, GX24 rotary lock lampholders
External thread 40x2.5 IEC 60399
Casing: PBT GF, white, T120
Nominal rating: 1/500
Push-in twin terminals: 0.5–0.75 mm² (lamp circuit)
Push-in terminals: 0.5–0.75 mm² (starter circuit)
Front fixing holes for screws M3
For screw rings (see p. 451)

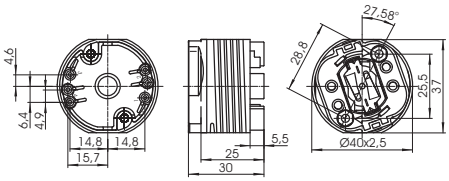



Type	**Ref. No.**	Base	Lamp	Output (W)	Weight (g)	Unit (pcs.)
45940	**507993**	G24q-2/GX24q-2	TC-DEL/TC-TEL	18 / 18	20.2	500
45960	**507994**	G24q-3/GX24q-3	TC-DEL/TC-TEL	26 / 26, 32	20.2	500
45930	**507992**	G24q-3/GX24q-3/-4*	TC-DEL/TC-TEL	26 / 26, 32 / 42	20.2	500
45980	**507995**	GX24q-4	TC-TEL	42	20.2	500

* Lampholder 507992 may only be used in luminaires that are operated with electronic ballasts that have been certified according to the applicable standards and that cover the luminaire performance range of 26, 32 and 42 W.

GX24q-5 rotary lock lampholder
for TC-TEL lamps 57 W
Plain casing
Casing: PPS, black, T150
Nominal rating: 1/500
Push-in twin terminals: 0.5–0.75 mm² (lamp circuit)
Push-in terminals: 0.5–0.75 mm² (starter circuit)
Front fixing holes for screws M3
Weight: 28 g, unit: 500 pcs.
Type: 45990
Ref. No.: 508159

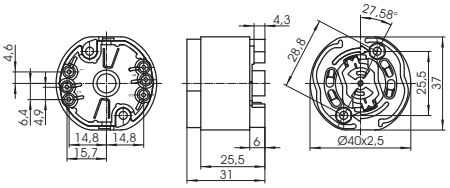



2G7 Lampholders

For single-ended compact fluorescent lamps TC-SEL

2G7 push-fit lampholder
Casing: PBT GF, white, T140, nominal rating: 2/250
Push-in twin terminals: 0.5–1 mm² (lamp circuit)
Push-in terminals: 0.5–1 mm² (starter circuit)
Rear fixing hole for self-tapping screw
acc. to ISO 1481/7049-ST4.2-C/F
Front fixing holes for screws M3
Locking of the lampholder by a 15° turn
Weight: 13.7 g, unit: 500 pcs.
Type: 35610
Ref. No.: 109235

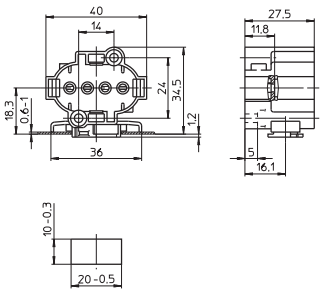

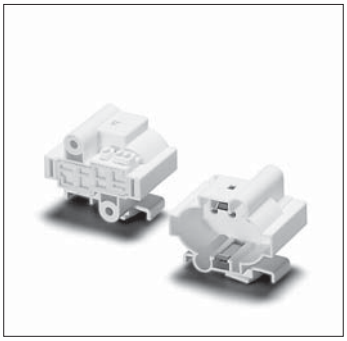

2G7 push-fit lampholder
Casing: PBT GF, white, T140
Nominal rating: 2/250
Push-in twin terminals: 0.5–1 mm² (lamp circuit)
Push-in terminals: 0.5–1 mm² (starter circuit)
Push-fit foot for cut-out 10x20 mm
for wall thickness 0.6–1 mm
Weight: 18 g, unit: 500 pcs.
Type: 35613
Ref. No.: 500574

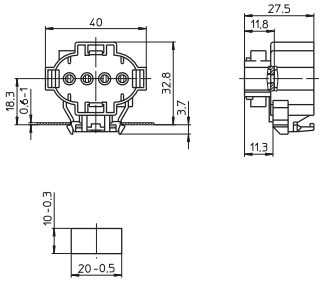

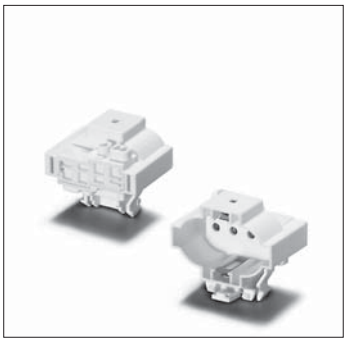

2G7 surface-mounted lampholder
Casing: PBT GF, white, T140, nominal rating: 2/250
Push-in twin terminals: 0.5–1 mm² (lamp circuit)
Push-in terminals: 0.5–1 mm² (starter circuit)
Fixing holes for screws M4
Lateral and rear fixing holes for self-tapping
screws acc. to ISO 1481/7049-ST4.2-C/F
Front fixing holes for screws M3
Weight: 18.1 g, unit: 500 pcs.
Type: 35611
Ref. No.: 109238

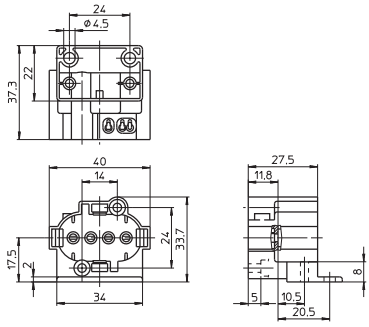

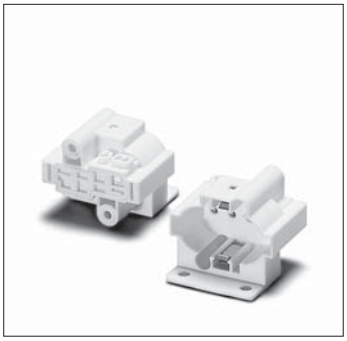

2G7 surface-mounted lampholder
Casing: PBT GF, white, T140
Nominal rating: 2/250
Push-in twin terminals: 0.5–1 mm² (lamp circuit)
Push-in terminals: 0.5–1 mm² (starter circuit)
Rear fixing holes for self-tapping screws
acc. to ISO 1481/7049-ST4.2-C/F
Front fixing holes for screws M3
Weight: 14 g, unit: 500 pcs.
Type: 35612
Ref. No.: 109240

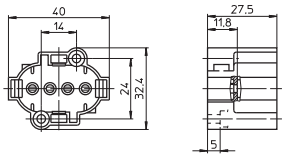

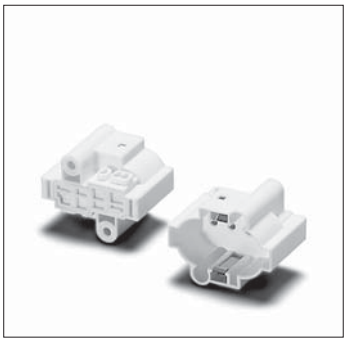

2G8 Lampholder

For single-ended compact fluorescent lamps TC-TEL

2G8 surface-mounted lampholder
Casing: PBT GF, white, T140
Nominal rating: 2/500
Push-in twin terminals: 0.5–1 mm² (lamp circuit)
Push-in terminals: 0.5–1 mm² (preheat circuit)
Rear fixing holes for self-tapping screws
acc. to ISO 1481/7049-ST4.2-C/F
Front fixing holes for screws M3
Weight: 19.6 g, unit: 250 pcs.
Type: 59000
Ref. No.: 526755

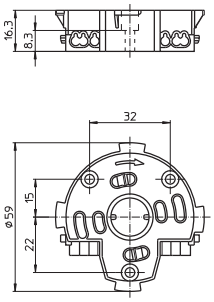

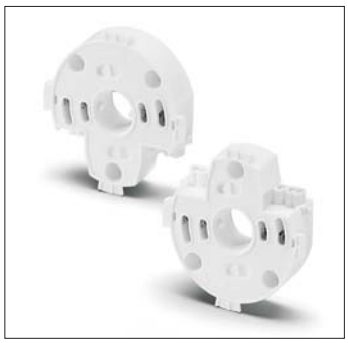

G23 Lampholders

For single-ended compact fluorescent lamps TC-S

If the central hole is used for mounting,
make sure there is no risk of rotation.

G23 surface-mounted lampholder
Casing: PBT GF, white, T140
Nominal rating: 2/250
Push-in twin terminals: 0.5–1 mm²
Rear fixing holes for self-tapping screws
acc. to ISO 1481/7049-ST2.9-C/F
Central fixing hole for screw M3
Weight: 11.6 g, unit: 500 pcs.
Type: 35002
Ref. No.: 101290

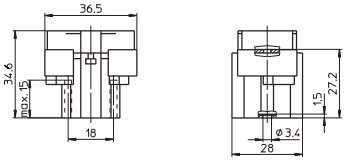

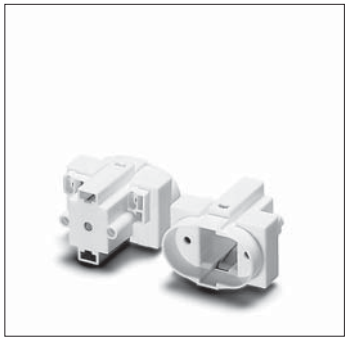

G23 lampholder
Casing: PBT GF, white, T140
Nominal rating: 2/250
Push-in twin terminals: 0.5–1 mm²
Front and rear fixing holes for self-tapping
screws acc. to ISO 1481/7049-ST2.9-C/F
Central fixing hole for screw M3
Weight: 9 g, unit: 500 pcs.
Type: 35003
Ref. No.: 101294

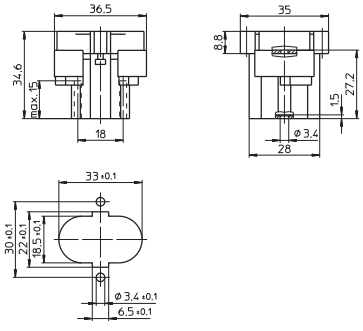

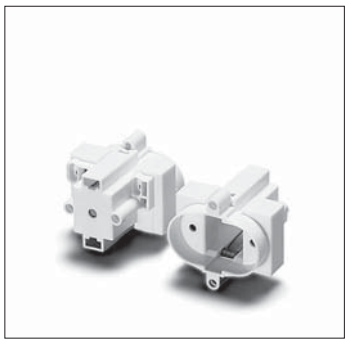

G23 push-fit lampholder
Casing: PBT GF, white, T140
Nominal rating: 2/250
Push-in twin terminals: 0.5–1 mm²
Split pins for wall thickness up to 1.2 mm
Central fixing hole for screw M3
Weight: 12 g, unit: 500 pcs.
Type: 35004
Ref. No.: 101298

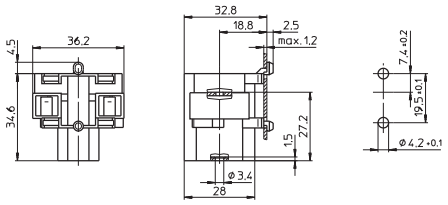

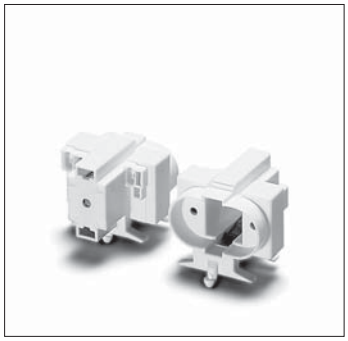

G23 surface-mounted lampholder
Casing: PBT GF, white, T140
Nominal rating: 2/250
Push-in twin terminals: 0.5–1 mm²
Fixing holes for screws M4
Central fixing hole for screw M3
Weight: 12.4 g, unit: 500 pcs.
Type: 35006
Ref. No.: 101306

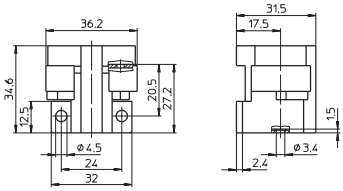

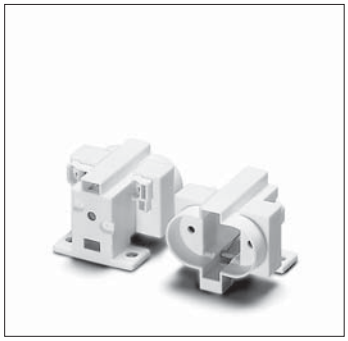

G23 lampholder
For push-fit on track
Casing: PBT GF, white, T140, nominal rating: 2/250
Push-in twin terminals: 0.5–1 mm²
Lateral fixing holes for self-tapping screws
acc. to ISO 1481/7049-ST2.9-C/F
Fixing holes for screws M4
Central fixing hole for screw M3
Weight: 14 g, unit: 500 pcs.
Type: 35007
Ref. No.: 101310

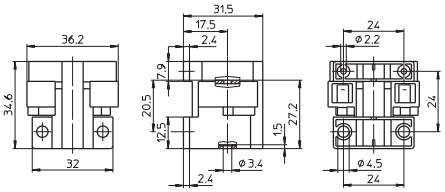



G23 surface-mounted lampholder
Casing: PBT GF, white, T140
Nominal rating: 2/250
Push-in twin terminals: 0.5–1 mm²
Fixing holes for screws M4
Central fixing hole for screw M3
Weight: 11.1 g, unit: 500 pcs.
Type: 35008
Ref. No.: 101314

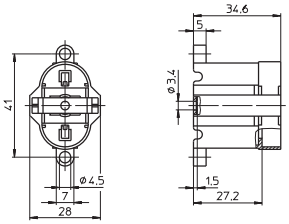

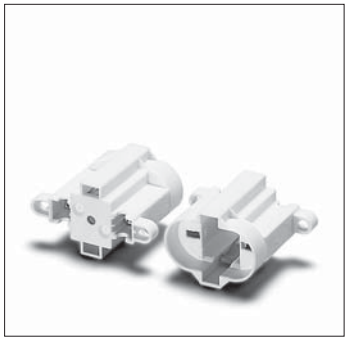

G23 lampholder, for cover caps (see p. 433–435)
External thread 40x2.5 IEC 60399
Casing: PBT GF, white, T140, nominal rating: 2/250
Push-in twin terminals: 0.5–1 mm²
Central fixing hole for screw M3
When using the central hole for mounting
additional depressions for anti-rotation pips
have to be provided.
For screw rings (see p. 451)
Weight: 16.3 g, unit: 500 pcs.
Type: 35010
Ref. No.: 101320

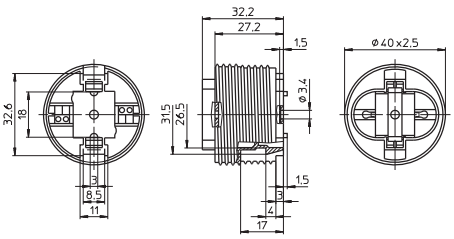



G23 lampholder
Casing: PBT GF, white, T140
Nominal rating: 2/250
Push-in twin terminals: 0.5–1 mm²
Lateral pivots for bracket 105820 (see p. 300)
Central fixing hole for screw M3
Weight: 11 g, unit: 500 pcs.
Type: 35011
Ref. No.: 101324

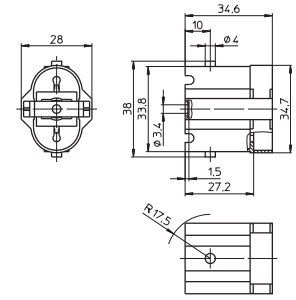



G23 surface-mounted lampholder
Casing: PBT GF, white, T140
Nominal rating: 2/250
Push-in twin terminals: 0.5–1 mm²
Front fixing holes for screws M3
Rear fixing holes for self-tapping screws
acc. to ISO 1481/7049-ST4.2-C/F
Weight: 11.9 g, unit: 500 pcs.
Type: 35012
Ref. No.: 108898

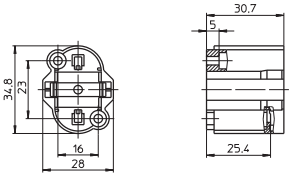

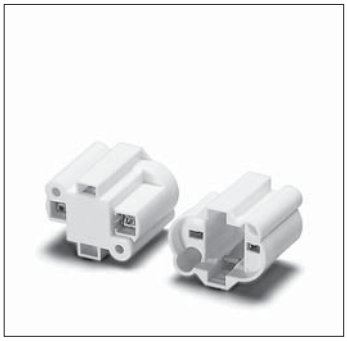

G23 push-fit lampholder
Casing: PBT GF, white, T140
Nominal rating: 2/250
Push-in twin terminals: 0.5–1 mm²
Push-fit foot for wall thickness 0.8–1.3 mm
Central fixing hole for screw M3
Weight: 11 g, unit: 500 pcs.
Type: 35051
Ref. No.: 101344

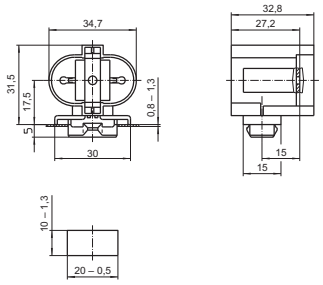

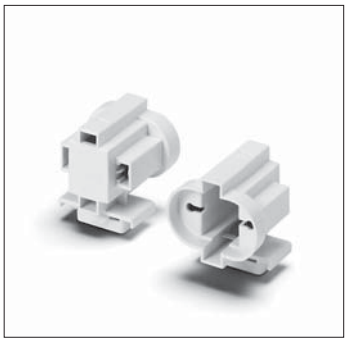

G23 push-fit lampholder
Casing: PBT GF, white, T140
Nominal rating: 2/250
Push-in twin terminals: 0.5–1 mm²
Front split pins for wall thickness 0.8–1.3 mm
Central fixing hole for screw M3
Weight: 12 g, unit: 500 pcs.
Type: 35052
Ref. No.: 101346

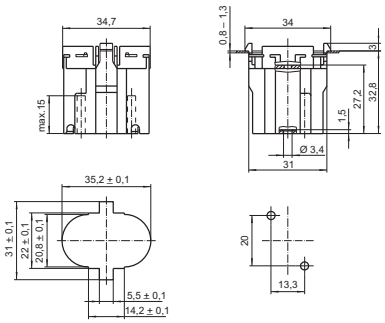

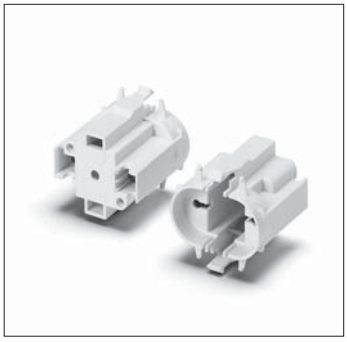

G23 lampholder
Casing: PBT GF, white, T140
Nominal rating: 2/250
Push-in terminals: 0.5–1 mm²
Central fixing hole for screw M3
Particularly suitable for narrow mounting
(e.g. for insertion into tube systems)
Weight: 8 g, unit: 500 pcs.
Type: 35201
Ref. No.: 101364

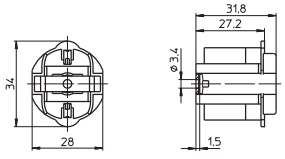

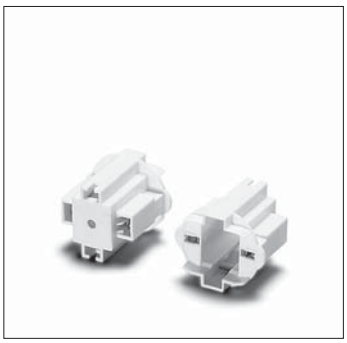

G23 lampholder
Casing: PBT GF, white, T140
Nominal rating: 2/250
Push-in terminals: 0.5–1 mm²
Central fixing hole for screw M3
Particularly suitable for narrow mounting
(e.g. for insertion into tube systems)
Weight: 8.2 g, unit: 500 pcs.
Type: 35202
Ref. No.: 101367

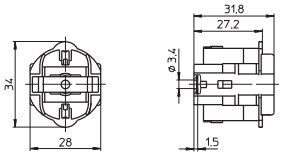



GR8, GR10q, GRY10q-3, GRZ10d, GRZ10t Lampholders

For single-ended compact fluorescent lamps TC-DD

GR8 push-fit lampholder
Casing: PC, white
Nominal rating: 2/250
Base and front push-in terminals: 0.5–1 mm²
Fixing clips for wall thickness up to 1 mm
Weight: 5.4 g, unit: 500 pcs.
Type: 35100
Ref. No.: 101358

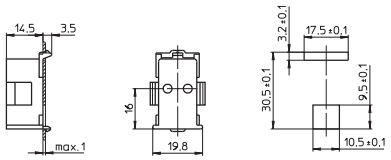



GR10q push-fit lampholder
Casing: PC, white, T110
Nominal rating: 2/250
Base push-in terminals: 0.5–1 mm²
Base fixing clip for wall thickness 0.6–1 mm
Weight: 6.2 g, unit: 1000 pcs.
Type: 35500
Ref. No.: 108927

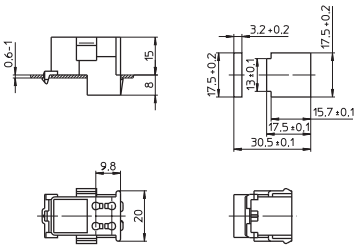



GR10q push-fit lampholder
Casing: PC, white, T110
Nominal rating: 2/250
Base push-in terminals: 0.5–1 mm²
Base split pins for wall thickness 0.6–1 mm
Weight: 6.2 g, unit: 1000 pcs.
Type: 35510
Ref. No.: 108928

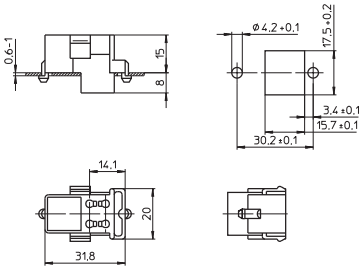

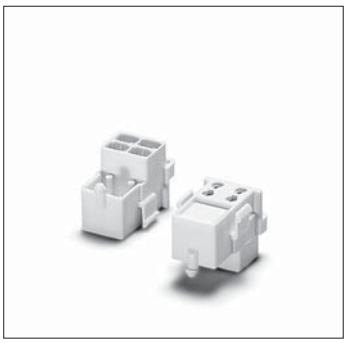

GR10q push-fit lampholder
Material: PBT, white, T110
Nominal rating: 2/250
Lateral push-in terminals: 0.5–1 mm²
Base fixing clip for wall thickness 0.6–1 mm
Weight: 7.2 g, unit: 1000 pcs.
Type: 35530
Ref. No.: 108932

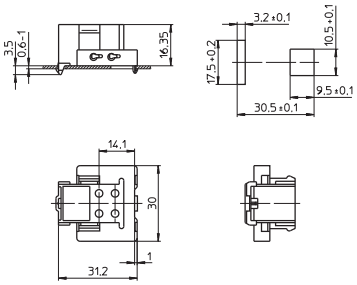



GR10q push-fit lampholder
Material: PBT, white, T110
Nominal rating: 2/250
Lateral push-in terminals: 0.5–1 mm²
Base split pins for wall thickness 0.6–1 mm
Weight: 7.2 g, unit: 1000 pcs.
Type: 35540
Ref. No.: 108933

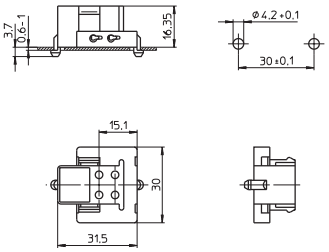



GR10q surface-mounted lampholder
Material: PBT, white, T110
Nominal rating: 2/250
Lateral push-in terminals: 0.5–1 mm²
Fastening slots for screws M3
Weight: 7.4 g, unit: 1000 pcs.
Type: 35550
Ref. No.: 108934

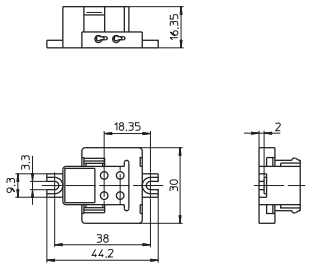



2G10 Lampholders

For single-ended compact fluorescent lamps TC-F

2G10 surface-mounted lampholder, with lamp lock
Casing: PBT GF, white, T140, nominal rating: 2/250
Push-in twin terminals: 0.5–1 mm²
Lateral lamp insertion
Front fixing holes for cheese-head screws M3
Rear fixing holes for self-tapping screws
acc. to ISO 1481/7049-ST4.2-C/F
Base fixing holes for screws M4
Weight: 25.5 g, unit: 250 pcs.
Type: 36300
Ref. No.: 101521

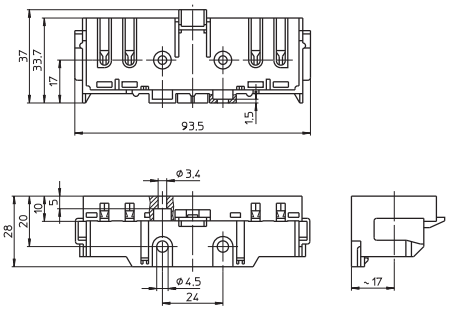

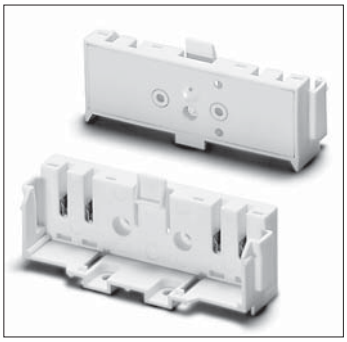

new

2G11/2GX11 Lampholders

For single-ended compact fluorescent lamps TC-L

2G11 surface-mounted lampholder
Casing: PBT GF, white, T140, nominal rating: 2/500
Push-in twin terminals: 0.5–1 mm² (lamp circuit)
Push-in terminals: 0.5–1 mm² (starter circuit)
Lateral pivots for bracket 105824 (see p. 300)
Base fixing holes for screws M4
Rear fixing holes for self-tapping screws
acc. to ISO 1481/7049-ST4.2-C/F
Front fixing holes for screws M3
Weight: 13.7 g, unit: 500 pcs.
Type: 36050
Ref. No.: 101485

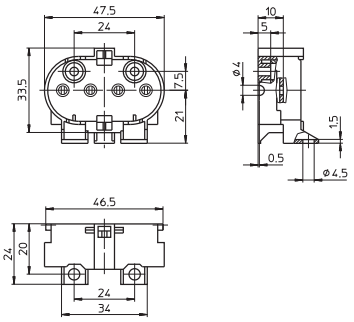



2G11 surface-mounted lampholder
Casing: PBT GF, white, T140, nominal rating: 2/500
Push-in twin terminals: 0.5–1 mm² (lamp circuit)
Push-in terminals: 0.5–1 mm² (starter circuit)
Lateral pivots for bracket 105824 (see p. 300)
Rear fixing holes for self-tapping screws
acc. to ISO 1481/7049-ST4.2-C/F
Front fixing holes for screws M3
Weight: 12.7 g, unit: 500 pcs.
Type: 36051
Ref. No.: 101489

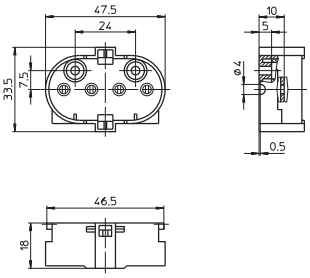



2GX11 surface-mounted lampholder
Casing: PBT GF, white, T140, nominal rating: 2/500
Push-in twin terminals: 0.5–1 mm² (lamp circuit)
Push-in terminals: 0.5–1 mm² (starter circuit)
Lateral pivots for bracket 105824 (see p. 300)
Base fixing holes for screws M4
Rear fixing holes for self-tapping screws
acc. to ISO 1481/7049-ST4.2-C/F
Front fixing holes for screws M3
Weight: 13.7 g, unit: 500 pcs.
Type: 36020
new **Ref. No.: 546609**

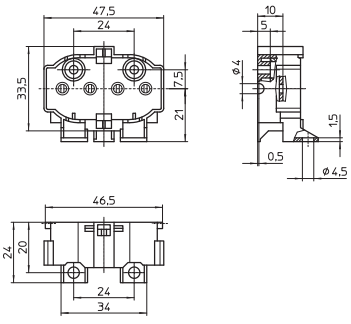

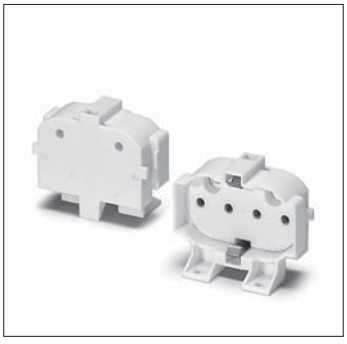

2GX11 surface-mounted lampholder
Casing: PBT GF, white, T140, nominal rating: 2/500
Push-in twin terminals: 0.5–1 mm² (lamp circuit)
Push-in terminals: 0.5–1 mm² (starter circuit)
Lateral pivots for bracket 105824 (see p. 300)
Rear fixing holes for self-tapping screws
acc. to ISO 1481/7049-ST4.2-C/F
Front fixing holes for screws M3
Weight: 12.7 g, unit: 500 pcs.
Type: 36021
new **Ref. No.: 546612**

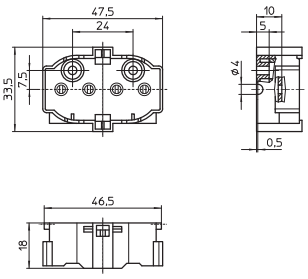



2G11 push-fit lampholder
Casing: PBT GF, white, T140, nominal rating: 2/500
Push-in twin terminals: 0.5–1 mm² (lamp circuit)
Push-in terminals: 0.5–1 mm² (starter circuit)
Lamp position: vertical
Rear fixing holes for self-tapping screws
acc. to ISO 1481/7049-ST4.2-C/F
Front fixing holes for screws M3
Weight: 14.3 g, unit: 500 pcs.
Type: 36052
Ref. No.: 101491

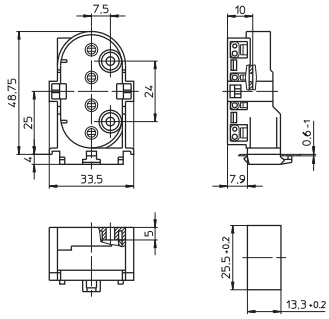



2G11 push-fit lampholder
Casing: PBT GF, white, T140, nominal rating: 2/500
Push-in twin terminals: 0.5–1 mm² (lamp circuit)
Push-in terminals: 0.5–1 mm² (starter circuit)
Rear fixing holes for self-tapping screws
acc. to ISO 1481/7049-ST4.2-C/F
Front fixing holes for screws M3
Option for base wiring
Weight: 14.1 g, unit: 500 pcs.
Type: 36053
Ref. No.: 101493

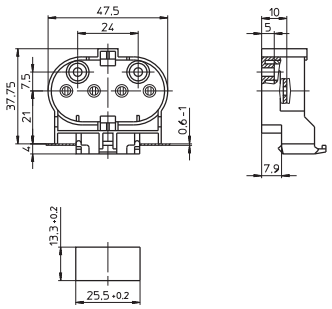



2G11 push-fit lampholder
For the automatic luminaire wiring
Casing: PBT GF, white, T140
Nominal rating: 2/250
IDC terminals for leads H05V-U 0.5
The lampholder is wired in its horizontal position
before being brought into its vertical service position,
to assist lamp changes, it can be swiveled by 25°
Weight: 12 g, unit: 500 pcs.
Type: 36010
Ref. No.: 500105

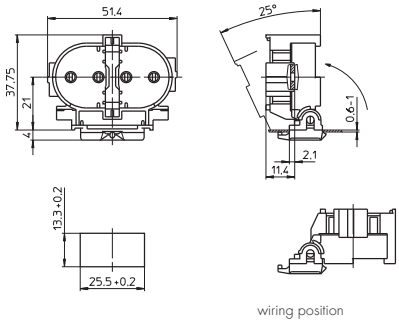



2G11 built-in lampholder
For the automatic luminaire wiring
Casing: PBT GF, white, T140
Nominal rating: 2/250
IDC terminals for leads H05V-U 0.5
Front and rear split pins
for wall thickness up to 1.2 mm
Weight: 10.5 g, unit: 500 pcs.
Type: 36011
Ref. No.: 500106

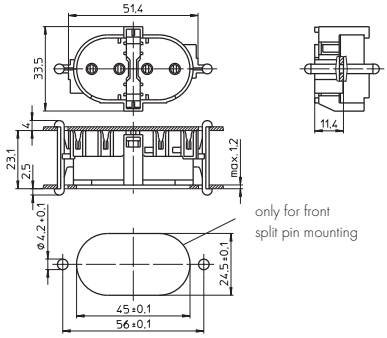

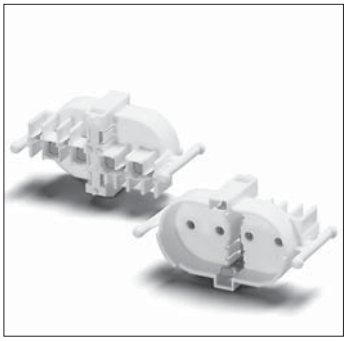

Accessories

For single-ended compact fluorescent lamps

The luminaire manufacturer is responsible
for the right choice of accessories.
Cover caps for G24/GX24 lampholders
(see p. 433–435)

Bracket
For G23 lampholder 101324 (see p. 295)
To swivel the lampholder when changing the lamp
Material: PC, white
Oblong holes for screws M4
Weight: 3.1 g, unit: 500 pcs.
Type: 97515
Ref. No.: 105820

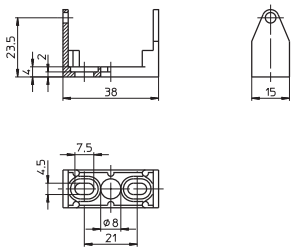



Bracket
For 2G11 lampholders 101485 and 101489
(see p. 298)
To swivel the lampholder when changing the lamp
Material: PC, white
Oblong holes for screws M4
Base fixing holes for self-tapping screws
acc. to ISO 1481/7049-ST2.9-C/F
Weight: 3.7 g, unit: 500 pcs.
Type: 97516
Ref. No.: 105824

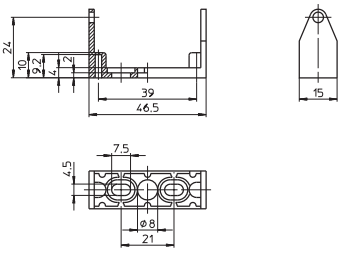



Lamp support for TC-D, TC-DEL lamps
Material: PC, white, UV-stabilised
Lamp position: 45°
Fixing foot with slot for screw M3.5
Weight: 1.5 g, unit: 500 pcs.
Type: 97031
Ref. No.: 105448

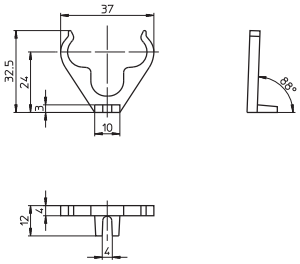

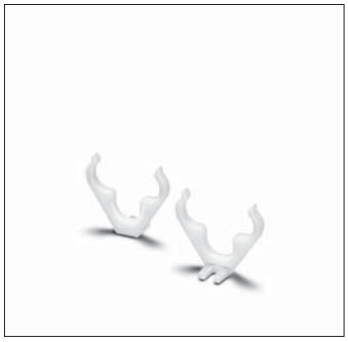

Lamp supports for TC-S, TC-SEL lamps
Height adjustable H: 17.5/20.5/23.5 mm
Push-fit foot for cut-out Ø 5.5 mm
for wall thickness up to 1 mm
Weight: 0.4/0.8/0.8 g, unit: 500 pcs.
Type: 35060

Ref. No.: 105775	foot, PC, white
Ref. No.: 105776	bracket, PC, crystal-clear, UV-stabilised
Ref. No.: 106416	bracket, PC, white, UV-stabilised

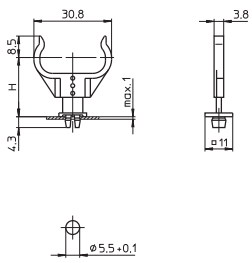



Lamp supports for TC-S, TC-SEL lamps
Height adjustable H: 27.5/30.5/33.5 mm
Push-fit foot for cut-out Ø 5.5 mm
for wall thickness up to 1 mm
Weight: 0.7/0.8/0.8 g, unit: 500 pcs.
Type: 35061

Ref. No.: 105931 foot, PC, white
Ref. No.: 105776 bracket, PC, crystal-clear, UV-stabilised
Ref. No.: 106416 bracket, PC, white, UV-stabilised

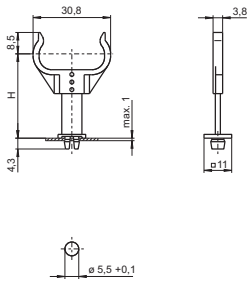



Lamp supports for TC-L lamps
Height adjustable H: 21/24/27 mm
Push-fit foot for cut-out Ø 5.5 mm
for wall thickness up to 1 mm
Weight: 0.4/1.3/1.1 g, unit: 500 pcs.
Type: 35760

Ref. No.: 105775 foot, PC, white
Ref. No.: 105777 bracket, PC, crystal-clear, UV-stabilised
Ref. No.: 106417 bracket, PC, white, UV-stabilised

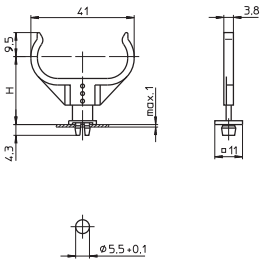



Lamp supports for TC-L lamps
Height adjustable H: 31/34/37 mm
Push-fit foot for cut-out Ø 5.5 mm
for wall thickness up to 1 mm
Weight: 0.7/1.3/1.1 g, unit: 500 pcs.
Type: 35761

Ref. No.: 105931 foot, PC, white
Ref. No.: 105777 bracket, PC, crystal-clear, UV-stabilised
Ref. No.: 106417 bracket, PC, white, UV-stabilised

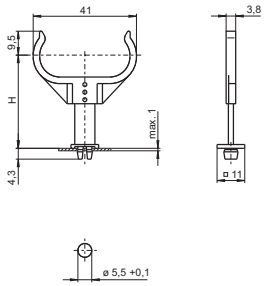



Lamp supports for TC-S, TC-SEL lamps
Material: stainless steel
Weight: 1.3 g, unit: 500 pcs.
Type: 93056 push-fit foot for Ø 5.5 mm
Ref. No.: 509522
Type: 93057 push-fit foot for 8.5x10.5 mm
Ref. No.: 509521

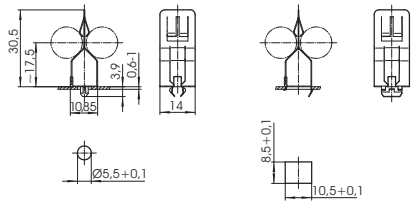



Lamp supports for TC-F, TC-L lamps
Material: stainless steel
Weight: 1.5 g, unit: 500 pcs.
Type: 93058 push-fit foot for Ø 5.5 mm
Ref. No.: 509520
Type: 93059 push-fit foot for 8.5x10.5 mm
Ref. No.: 509519

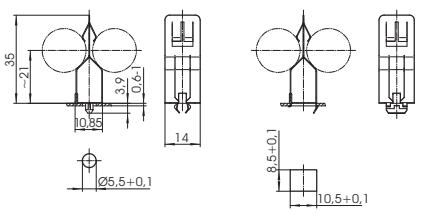



Lamp supports for TC-F, TC-L lamps
For wall thickness 0.6–1 mm
Material: PC, white, UV-stabilised
Weight: 1.3 g, unit: 500 pcs.
Type: 97638 push-fit foot for Ø 5.5 mm
Ref. No.: 105981

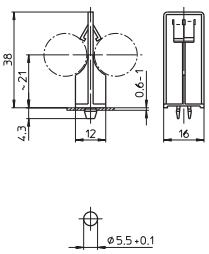



Lamp support for TC-L lamps
Material: PC, white, UV-stabilised
Push-fit foot for cut-out Ø 5.5 mm
for wall thickness up to 1 mm
Weight: 0.7 g, unit: 500 pcs.
Type: 36060
Ref. No.: 108878

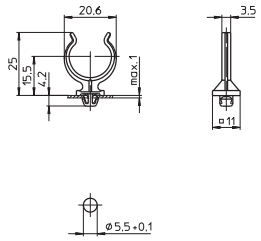



Lamp support for TC-L lamps
Material: PC, crystal-clear, UV-stabilised
Lockable
Base split pins for wall thickness 0.6–1 mm
Weight: 4 g, unit: 500 pcs.
Type: 36061
Ref. No.: 101497

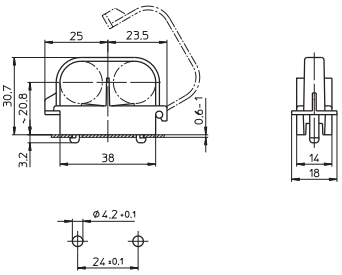

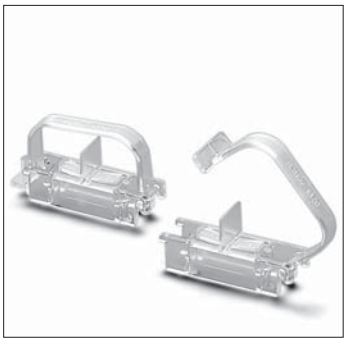

GX53-1 Lampholders, Accessories

For single-ended compact fluorescent lamps with integrated ballasts

GX53-1 lampholder
Casing: PC, white, T100, nominal rating: 2/250
Push-in terminals for through-wiring
for single-core leads: 0.5–1 mm²
for stranded leads:
0.75 mm², tinned lead ends
Fixing holes for screws M3
Weight: 12.8 g, unit: 200 pcs.
Type: 11000
Ref. No.: 530878

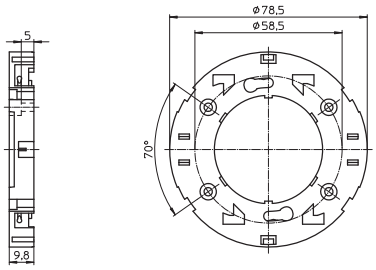

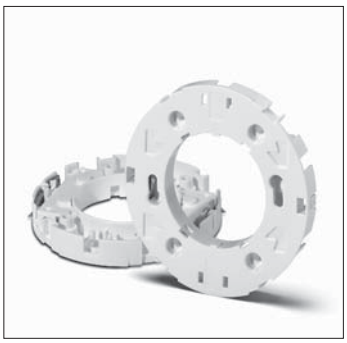

GX53-1 lampholder
Fixing springs for installation into furniture panels
Casing: PC, white, T100, nominal rating: 2/250
Push-in terminals for through-wiring
for single-core leads: 0.5–1 mm²
for stranded leads:
0.75 mm², tinned lead ends
Cut-out: Ø 78$^{+0.2}$ mm
Weight: 13.2 g, unit: 200 pcs.
Type: 11010
Ref. No.: 530879

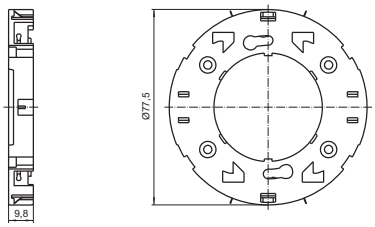

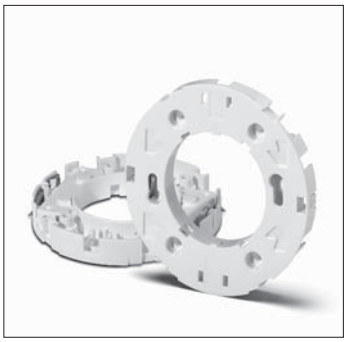

Cord grip/cover plate for GX53-1 lampholders
For leads H03VVH2-F 2X0.75, tinned lead ends
For luminaires of protection class II
Material: PC, white
Weight: 1.6 g, unit: 200 pcs.
Type: 97278
Ref. No.: 504939

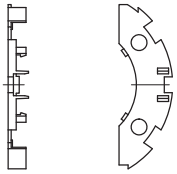



Surface-mounted installation ring
For wood or furniture panels
Material: PC, white
Weight: 10.4 g, unit: 100 pcs.
Type: 97277
Ref. No.: 504938

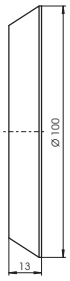



Surface-mounted installation ring, flat
For built-in into furniture panels
Material: PC, white
Weight: 2.1 g, unit: 200 pcs.
Type: 97272
Ref. No.: 504933

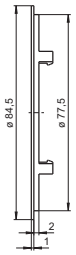



Surface-mounted installation ring, high
For built-in into furniture panels
Material: PC, white
Weight: 5.7 g, unit: 100 pcs.
Type: 97281
Ref. No.: 505118

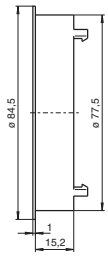



Surface-mounted installation ring
For built-in into furniture panels
Material: PC, transparent
Weight: 12.5 g, unit: 100 pcs.
Type: 97280
Ref. No.: 505003

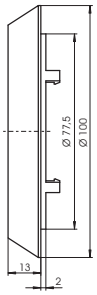



LAMPHOLDERS FOR T5, T8, T12 AND T2 LAMPS





VS LAMPHOLDERS FOR DOUBLE-ENDED FLUORESCENT LAMPS

Vossloh-Schwabe's comprehensive range of lampholders for double-ended fluorescent lamps covers all major fixing methods. Push-through, push-fit and built-in lampholders with split pins or catches are available just as models with screw and push fittings.

High-grade materials for the contacts and thermoplastics for the casings guarantee reliable contacts and a long service life of the components.

Special G13 lampholders for the USA and Canada can be found under **www.unvlt.com**.

4 Lampholders and Accessories for T Lamps

G5 lampholders **308–315**
G5 lampholders, accessories 308–312
G5 twin lampholder 313
G5 lampholders, degree of protection IP54/IP65/IP67 313–314
2GX13 lampholders, accessories 315

G13 lampholders **316–336**
G13 push-through lampholders 316–318
G13 push-fit lampholders 319–321
G13 push-fit twin lampholders, accessories 322–323
G13 built-in lampholders 323–327
G13 surface-mounted lampholders 327–328
Accessories for T8 and T12 lamps 328–330
G13 lampholders, degree of protection IP54/IP65/IP67, accessories 331–335
G10q lampholders, accessories 336

W4.3 x 8.5d lampholders **337**

Technical details for fluorescent lamps **350–379**
General technical details 533–540
Glossary 541–543

G5 Lampholders, Accessories

For fluorescent lamps T5 (T16)

Max. permitted temperature T_m
on the rear side of the lampholder: 110 °C

G5 push-through/surface-mounted lampholder
Lamp axis push-through lampholder: 13.2 mm
Lamp axis surface-mounted lampholder: 15.2 mm
Casing: PC, white, T110
Nominal rating: 2/500
Push-in terminals: 0.5–1 mm²
Lateral fixing clips for wall thickness 0.5–1.5 mm
Fixing slot for screw M3
Weight: 3.2 g, unit: 1000 pcs.
Type: 09105
Ref. No.: 100305

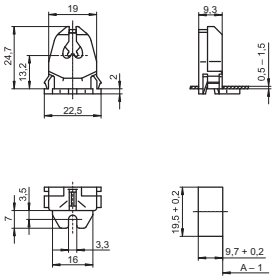



G5 built-in lampholder
Casing: PC, white, T110
Nominal rating: 2/500
Push-in terminals: 0.5–1 mm²
Rear split pins for wall thickness up to 1.2 mm
Weight: 2.6 g, unit: 1000 pcs.
Type: 09205
Ref. No.: 100310

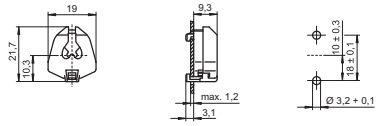



G5 built-in/push-fit lampholder
Lamp axis: 12 mm
Casing: PC, white, T110
Nominal rating: 2/500
Push-in terminals: 0.5–1 mm²
Rear split pins for wall thickness up to 1.2 mm
Base split pins for wall thickness up to 1 mm
Weight: 2.9 g, unit: 1000 pcs.
Type: 09210
Ref. No.: 106455

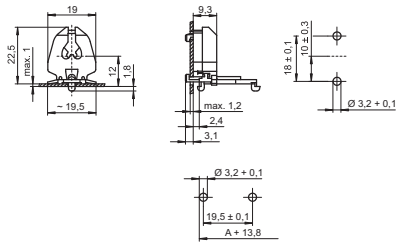



G5 push-through lampholders
For the automatic luminaire wiring
Casing: PBT GF, white, frontplate: PC, white
Rotor: PBT GF, white, T140, lamp axis: 15 mm
Nominal rating: 2/500
IDC terminals for leads H05V-U 0.5
Lateral fixing clips for wall thickness 0.5–1.5 mm
Weight: 5 g, unit: 1000 pcs.
Type: 09420/ 09421
Ref. No.: 532377 with stop
Ref. No.: 532378 without stop

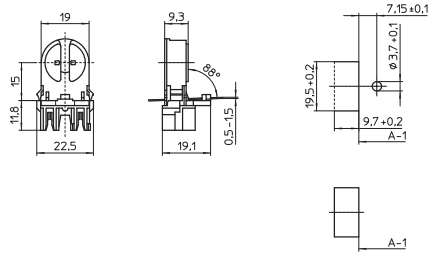



G5 push-through lampholders
For the automatic luminaire wiring
Casing: PBT GF, white, frontplate: PC, white
Rotor: PBT GF, white, T140, lamp axis: 20 mm
Nominal rating: 2/500
IDC terminals for leads H05V-U 0.5
Lateral fixing clips for wall thickness 0.5–1.5 mm
Weight: 5.6 g, unit: 1000 pcs.
Type: 09422/09423
Ref. No.: 532379 with stop
Ref. No.: 532380 without stop

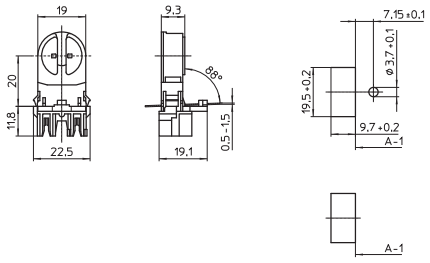



G5 push-fit lampholder
For the automatic luminaire wiring
Lamp axis: 18 mm
Casing: PC, white, rotor: PBT GF, white, T130
Nominal rating: 2/500
IDC terminals for leads H05V-U 0.5
Lateral push-in twin terminals: 0.5–1 mm²
Weight: 5.5 g, unit: 1000 pcs.
Type: 09900
Ref. No.: 534644

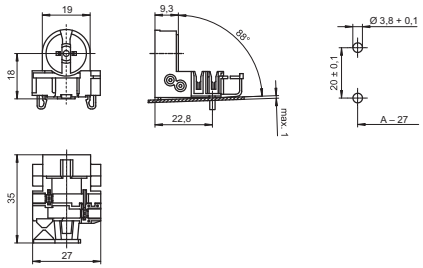



G5 built-in lampholders
For the automatic luminaire wiring
Casing: PC, white, rotor: PBT GF, white, T130
Nominal rating: 2/500
IDC terminals for leads H05V-U 0.5
Rear split pins for wall thickness up to 1.2 mm
Weight: 3.7/4.1 g, unit: 1000 pcs.
Type: 09145
Ref. No.: 501533
Type: 09146 with spring adjustment
Ref. No.: 501534

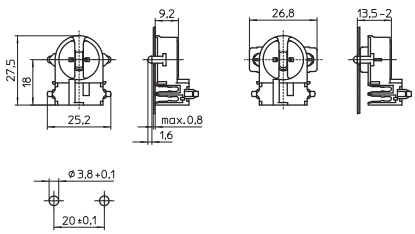

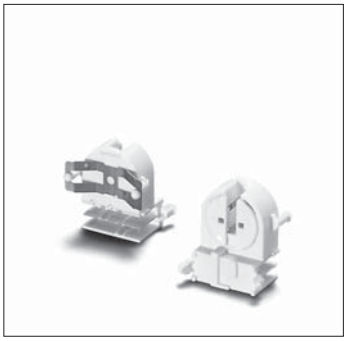

G5 built-in lampholder
Casing: PBT GF, white, rotor: PBT GF, white
T140, nominal rating: 2/500
Push-in twin terminals: 0.5–1 mm²
Lateral fixing clips
Weight: 2.8 g, unit: 1000 pcs.
Type: 09404
Ref. No.: 505732

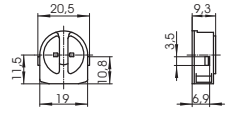



G5 built-in lampholders
Casing: PBT GF, white, rotor: PBT GF, white
T140, nominal rating: 2/500
Push-in twin terminals: 0.5–1 mm²
Rear split pins for wall thickness up to 1.2 mm
Weight: 2.9/3.3 g, unit: 1000 pcs.
Type: 09405
Ref. No.: 505733
Type: 09406 with spring adjustment
Ref. No.: 505734

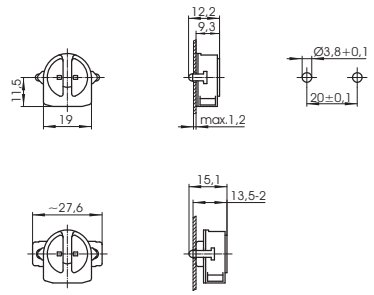



new

G5 built-in lampholder
Lampholder thickness: 12.5 mm
Casing: PBT GF, white, rotor: PBT GF, white
T140, nominal rating: 2/500
Push-in twin terminals: 0.5–1 mm²
Rear split pins for wall thickness up to 1 mm
Weight: 3 g, unit: 1000 pcs.
Type: 09407
Ref. No.: 508590

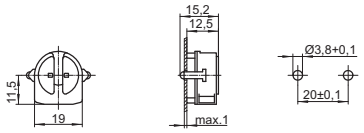



G5 built-in lampholders
Casing: PBT GF, white, rotor: PBT GF, white
T140, nominal rating: 2/500
Push-in twin terminals: 0.5–1 mm²
Rear split pins for wall thickness up to 1.2 mm
Weight: 2.9/3.2 g, unit: 1000 pcs.
Type: 09415
Ref. No.: 505735
Type: 09416 with spring adjustment
Ref. No.: 505736

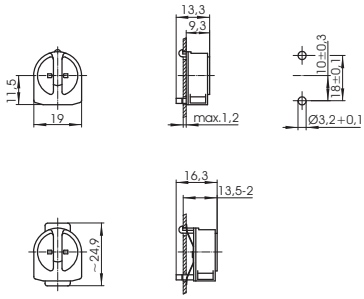



G5 push-through lampholders
Lamp axis: 15 mm
Casing: PBT GF, white, rotor: PBT GF, white
T140, nominal rating: 2/500
Push-in twin terminals: 0.5–1 mm²
Lateral fixing clips for wall thickness 0.5–1.5 mm
Weight: 3.5/3.4 g, unit: 1000 pcs.
Type: 09420/09421
Ref. No.: 505737 with stop
Ref. No.: 505739 without stop

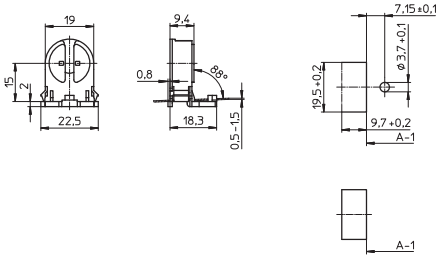



G5 push-through lampholders
Lamp axis: 20 mm
Casing: PBT GF, white, rotor: PBT GF, white
T140, nominal rating: 2/500
Push-in twin terminals: 0.5–1 mm²
Lateral fixing clips for wall thickness 0.5–1.5 mm
Weight: 4.1 g, unit: 1000 pcs.
Type: 09432/09433
new **Ref. No.: 545933** with stop
new **Ref. No.: 545935** without stop

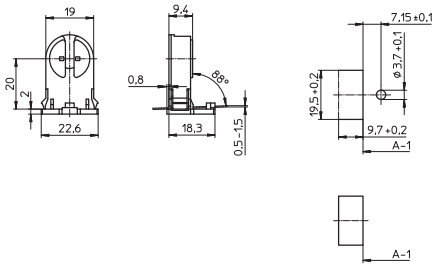



G5 push-through lampholders
Lamp axis: 25 mm
Casing: PBT GF, white, rotor: PBT GF, white
T140, nominal rating: 2/500
Push-in twin terminals: 0.5–1 mm²
Lateral fixing clips for wall thickness 0.5–1.5 mm
Weight: 4.5 g, unit: 1000 pcs.
Type: 09434/09435
new **Ref. No.: 545937** with stop
new **Ref. No.: 545939** without stop

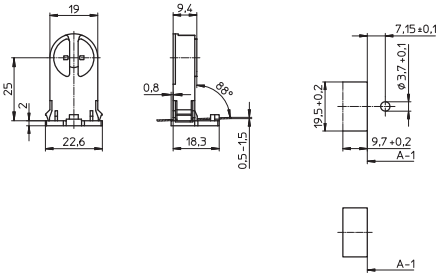



G5 push-through lampholders
Lamp axis: 35 mm
Casing: PBT GF, white, rotor: PBT GF, white
T140, nominal rating: 2/500
Push-in twin terminals: 0.5–1 mm²
Lateral fixing clips for wall thickness 0.5–1.5 mm
Weight: 4.6 g, unit: 1000 pcs.
Type: 09426/09427
Ref. No.: 505745 with stop
Ref. No.: 505746 without stop

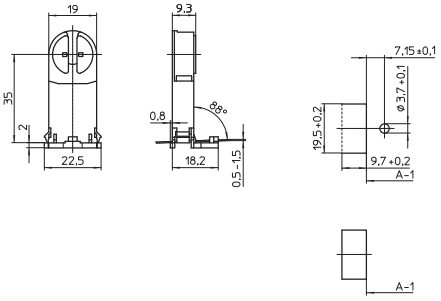



G5 push-fit lampholder
Lamp axis: 14 mm
Casing: PBT GF, white, rotor: PBT GF, white
T140, nominal rating: 2/500
Push-in twin terminals: 0.5–1 mm²
Rear fixing clips for wall thickness 0.6–1 mm
Base or lateral wiring
Weight: 3.3 g, unit: 1000 pcs.
Type: 09440
Ref. No.: 505747

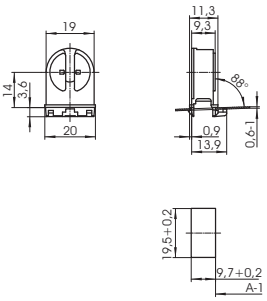



G5 push-fit lampholder
Lamp axis: 18 mm
Casing: PBT GF, white, rotor: PBT GF, white
T140, nominal rating: 2/500
Push-in twin terminals: 0.5–1 mm²
Rear fixing clips for wall thickness 0.6–1 mm
Base or lateral wiring
Weight: 3.9 g, unit: 1000 pcs.
Type: 09446
new **Ref. No.: 545894**

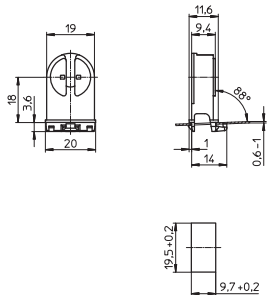



G5 push-fit lampholder
Lamp axis: 23 mm
Casing: PBT GF, white, rotor: PBT GF, white
T140, nominal rating: 2/500
Push-in twin terminals: 0.5–1 mm²
Rear fixing clips for wall thickness 0.6–1 mm
Base or lateral wiring
Weight: 4.2 g, unit: 1000 pcs.
Type: 09447
new **Ref. No.: 545896**

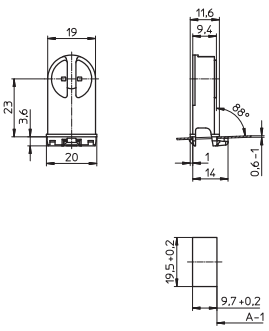



G5 push-fit lampholder
Lamp axis: 15 mm
Casing: PBT GF, white, rotor: PBT GF, white
T140, nominal rating: 2/500
Push-in twin terminals: 0.5–1 mm²
Base split pins for wall thickness 0.6–1 mm
Weight: 3.4 g, unit: 1000 pcs.
Type: 09450
Ref. No.: 505750

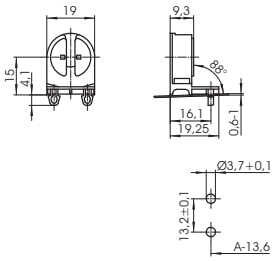



G5 push-fit lampholder
Lamp axis: 11.8 mm
Casing: PBT GF, white, rotor: PBT GF, white
T140, nominal rating: 2/500
Push-in twin terminals: 0.5–1 mm²
Base split pins for wall thickness up to 1 mm
Lateral wiring
Weight: 3.1 g, unit: 1000 pcs.
Type: 09460
Ref. No.: 505751

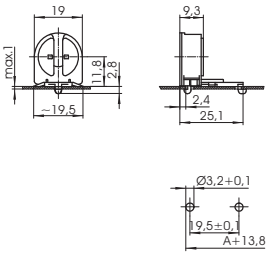



G5 built-in/push-fit lampholder
Lamp axis: 11.8 mm
Casing: PBT GF, white, rotor: PBT GF, white
T140, nominal rating: 2/500
Push-in twin terminals: 0.5–1 mm²
Rear split pins for wall thickness up to 1.2 mm
Base split pins for wall thickness up to 1 mm
Lateral wiring
Weight: 3.2 g, unit: 1000 pcs.
Type: 09465
Ref. No.: 508314

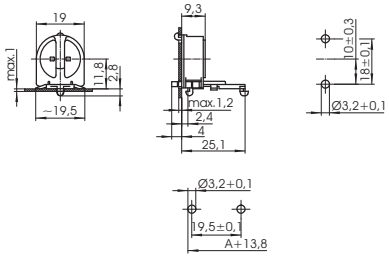



G5 lampholder
For push-fit onto the lamp
Casing: PBT GF, white, T130
Nominal rating: 2/500
Push-in twin terminals: 0.5–1 mm²
Pin support for reliable contact
Lamp support 109685 (see below)
Weight: 3.7 g, unit: 1000 pcs.
Type: 09170
Ref. No.: 109686

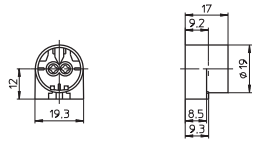



Lamp support for lamps Ø 16 mm
Material: zinc-coated polished steel
Fixing hole for screw M3.5
Weight: 1.3 g, unit: 1000 pcs.
Type: 94088
Ref. No.: 109685

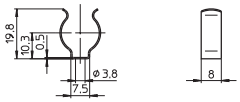



Lamp support for lamps Ø 16 mm
Material: PC, white, UV-stabilised
Push-fit foot for cut-out Ø 5.5 mm
Weight: 1 g, unit: 500 pcs.
Type: 84001
Ref. No.: 500757

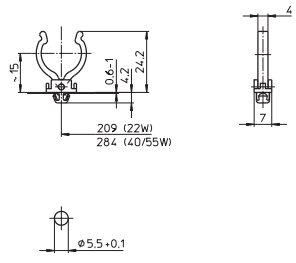



G5 Twin Lampholder

For fluorescent lamps T5 (T16)

Max. permitted temperature T_m
on the rear side of the lampholder: 110 °C

G5 built-in lampholder
Casing: PBT GF, white, rotor: PBT GF, white
T140, nominal rating: 2/500
Push-in twin terminals: 0.5–1 mm²
Lateral fixing clips
Weight: 2.8 g, unit: 1000 pcs.
Type: 09404
Ref. No.: 505732

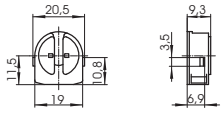



Push-fit bracket
For two G5 built-in lampholders 505732
Material: PC, white
Lamp axis: 20 mm
Distance between two lamp axes: 24 mm
Push-fit foot for wall thickness 0.5–1 mm
Weight: 3.5 g, unit: 1000 pcs.
Type: 97677
Ref. No.: 507562

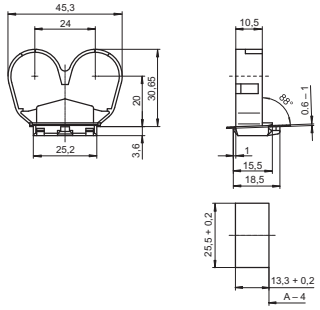



G5 Lampholders, Degree of Protection IP54/IP65/IP67

For fluorescent lamps T5 (T16)
For luminaires of protection class I and II

Lampholders protected against dust and splashing water (IP54)
Lampholders protected against dust and jet of water (IP65)
Dust and watertight lampholders (IP67)

Pin support for reliable contact
With spring adjustment
Max. permitted temperature T_m
on the rear side of the lampholder: 110 °C

G5 push-fit lampholder for metal casing
Casing: PC, white, interior part: PBT GF
T140, nominal rating: 2/500
Push-in twin terminals: 0.5–1 mm²
Push-fit foot for wall thickness: 1.4–2 mm
Weight: 11.3 g, unit: 250 pcs.
Type: 84101 system 153
Ref. No.: 529832

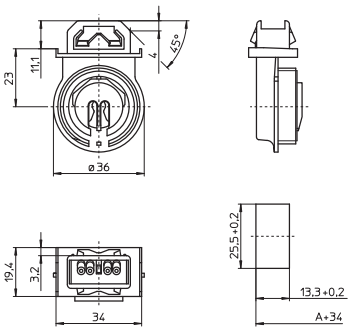



new

G5 push-fit lampholder for plastic casing
Casing: PC, white, interior part: PBT GF
T140, nominal rating: 2/500
Push-in twin terminals: 0.5–1 mm²
Push-fit foot for wall thickness: 0.4–1 mm
Weight: 11.6 g, unit: 250 pcs.
Type: 84104 system 154
Ref. No.: 530535

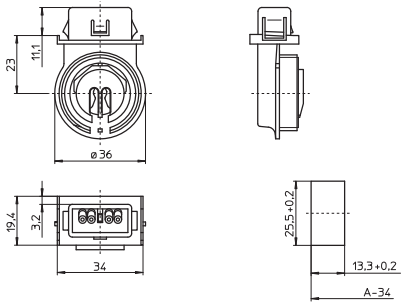



Foot gaskets for systems 153 and 154
Weight: 0.5/0.7/0.7 g
Unit: 1000 pcs.
Type: 98002 degree of protection IP67
Ref. No.: 108947 material: PE foam
Type: 98087 degree of protection IP67
Ref. No.: 503773 material: EPDM, black
Type: 98003 degree of protection IP54
Ref. No.: 108266 material: EPDM, black

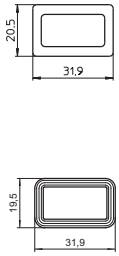

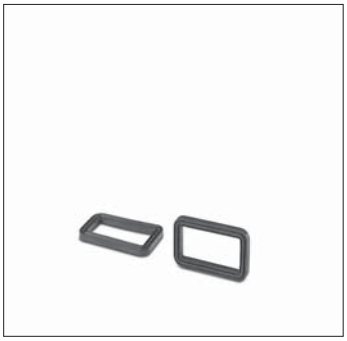

G5 push-fit lampholder
Casing: PC, white, interior part: PBT GF
T140, nominal rating: 2/500
Push-in twin terminals: 0.5–1 mm²
Push-fit foot for wall thickness: 1.4–2 mm
Weight: 12.7 g, unit: 250 pcs.
Type: 84108 system 151
Ref. No.: 534073

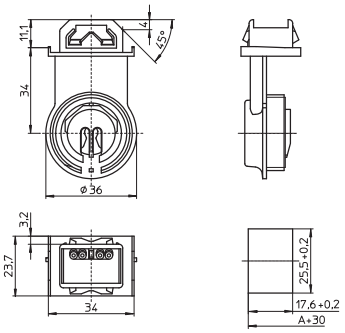



Foot gaskets for system 151
Weight: 1/1.1/1.1 g
Unit: 1000 pcs.
Type: 98004 degree of protection IP65
Ref. No.: 108267 material: cellular rubber, black
Type: 98011 degree of protection IP67
Ref. No.: 504078 material: silicone, transparent
Type: 98008 degree of protection IP67
new **Ref. No.: 546254** profiled foot gasket, material: EPDM, black

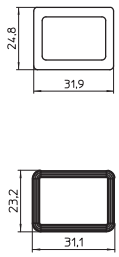

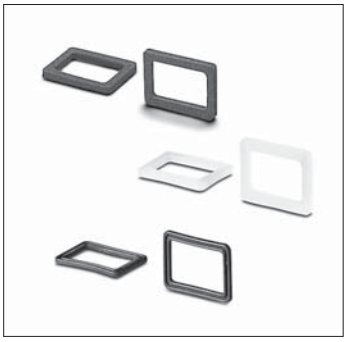

Screw ring for systems 151, 153 and 154
Ring: PBT GF, white, gasket: silicone
Weight: 11.8 g, unit: 250 pcs.
Type: 84103
Ref. No.: 529836

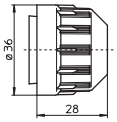



2GX13 Lampholders, Accessories

For fluorescent lamps T-R5 (T-R16)

2GX13 push-fit lampholder
Lamp axis: 15 mm
Casing: PC, white, T110
Nominal rating: 2/500
Push-in terminals: 0.5–1 mm²
Base push-fit studs for
wall thickness up to 1.2 mm
Weight: 10 g, unit: 500 pcs.
Type: 58110
new **Ref. No.: 546656**

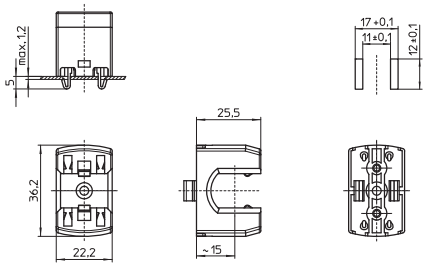



2GX13 surface-mounted lampholder
Lamp axis: 15 mm
Casing: PC, white, T110
Nominal rating: 2/500
Push-in terminals: 0.5–1 mm²
Rear fixing holes for self-tapping screws
acc. to ISO 1481/7049-ST2.9-C/F
Lateral fixing holes for screws M3
Weight: 10.6 g, unit: 500 pcs.
Type: 58100
new **Ref. No.: 546655**

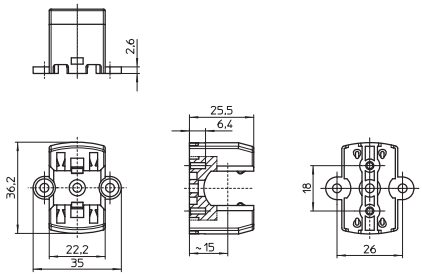



Lamp support for lamps Ø 16 mm
Material: PC, white, UV-stabilised
Fixing hole for screw M3
Fixing hole for self-tapping screw
acc. to ISO 1481/7049-ST4.2-C/F
Weight: 1 g, unit: 500 pcs.
Type: 84000
Ref. No.: 109532

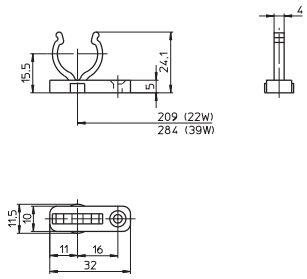



Lamp support for lamps Ø 16 mm
Material: PC, white, UV-stabilised
Push-fit foot for cut-out Ø 5.5 mm
Weight: 1 g, unit: 500 pcs.
Type: 84001
Ref. No.: 500757

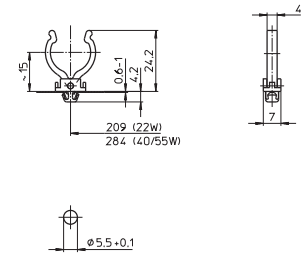



new

G13 Push-through Lampholders

For fluorescent lamps T8 (T26), T12 (T38)

Lampholders with integrated starter holder have
push-in twin terminals for the lamp circuit and
push-in terminals for the the starter circuit.
Pin support for reliable contact
Max. permitted temperature T_m
on the rear side of the lampholder: 110 °C

G13 push-through lampholders for lamps T8 and T12
Lamp axis: 23 mm
Casing: PC, white, frontplate: PBT GF, white
T140, nominal rating: 2/500
Push-in terminals: 0.5 - 1 mm²
Lateral fixing clips for wall thickness 0.4 - 2 mm
Weight: 6 g, unit: 1000 pcs.
Type: 27700/27701
Ref. No.: 109330 with stop
Ref. No.: 109331 without stop

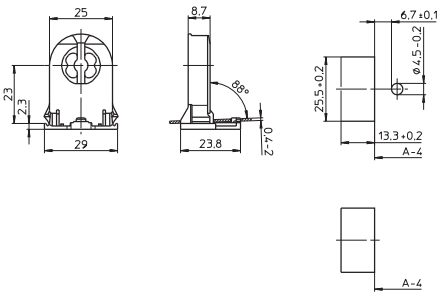



G13 Rotoclic push-through lampholders
for lamps T8 and T12
Lamp axis: 23 mm
Casing: PC, white, frontplate: PBT GF, white
T140, nominal rating: 2/500
Push-in terminals: 0.5 - 1 mm²
Lateral fixing clips for wall thickness 0.4 - 2 mm
Weight: 6.8 g, unit: 1000 pcs.
Type: 27700/27701
new **Ref. No.: 546641** with stop
new **Ref. No.: 546642** without stop

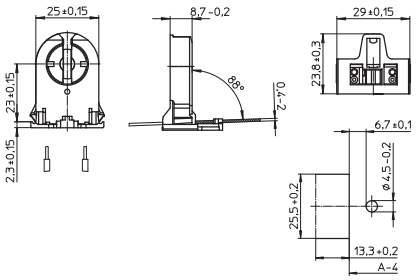



G13 push-through lampholders for lamps T8
With starter attachment
Lamp axis: 23 mm
Casing: PC, white, frontplate: PBT GF, white
T140, nominal rating: 2/500
Push-in terminals: 0.5 - 1 mm²
Lateral fixing clips for wall thickness 0.4 - 2 mm
Weight: 10.4 g, unit: 500 pcs.
Type: 27800/27801
Ref. No.: 109332 with stop
Ref. No.: 109335 without stop

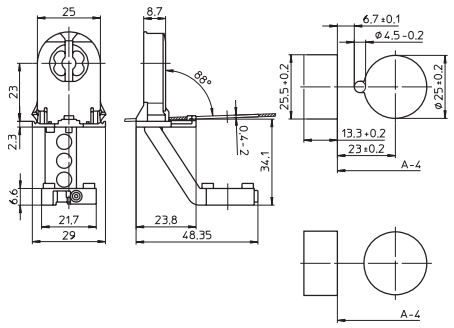



G13 Rotoclic push-through lampholders
for lamps T8, with starter attachment
Lamp axis: 23 mm
Casing: PC, white, frontplate: PBT GF, white
T140, nominal rating: 2/500
Push-in terminals: 0.5 - 1 mm²
Lateral fixing clips for wall thickness 0.4 - 2 mm
Weight: 10.4 g, unit: 500 pcs.
Type: 27800/27801
new **Ref. No.: 546647** with stop
new **Ref. No.: 546648** without stop

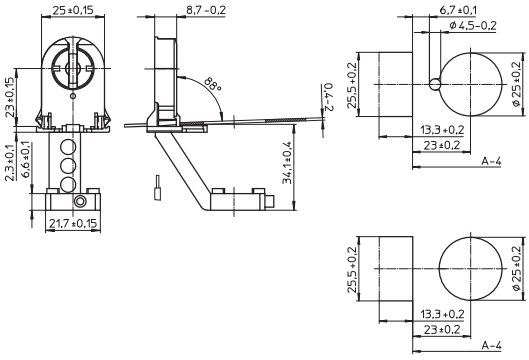



G13 push-through lampholders for lamps T8
Lamp axis: 16 mm
Casing: PC, white, frontplate: PBT GF, white
T140, nominal rating: 2/500
Push-in terminals: 0.5–1 mm²
Lateral fixing clips for wall thickness 0.4–2 mm
Weight: 4.6/4.4 g, unit: 1000 pcs.
Type: 29300/29301
Ref. No.: 509134 with stop
Ref. No.: 509135 without stop

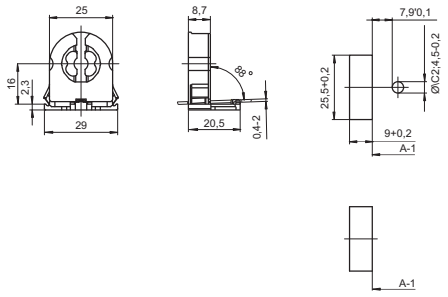



G13 push-through lampholders for lamps T8 and T12
With starter attachment
Lamp axis: 22.5 mm
Casing: PC, white, rotor: PBT, white
T130, nominal rating: 2/500
Push-in terminals: 0.5–1 mm²
Lateral fixing clips for wall thickness 0.6–2 mm
Weight: 9.5 g, unit: 500 pcs.
Type: 27820/27821
Ref. No.: 100579 with stop
Ref. No.: 100581 without stop

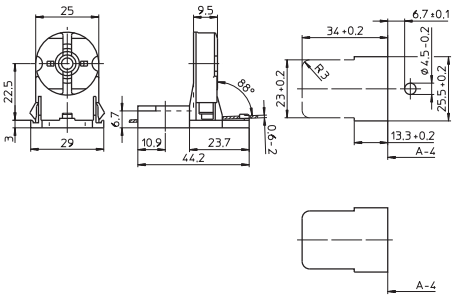



G13 push-through lampholders for lamps T8 and T12
Lamp axis: 31 mm
Casing: PC, white, frontplate: PBT GF, white
T140, nominal rating: 2/500
Push-in terminals: 0.5–1 mm²
Lateral fixing clips for wall thickness 0.4–2 mm
Weight: 7.8 g, unit: 1000 pcs.
Type: 28500/28501
Ref. No.: 109338 with stop
Ref. No.: 109339 without stop

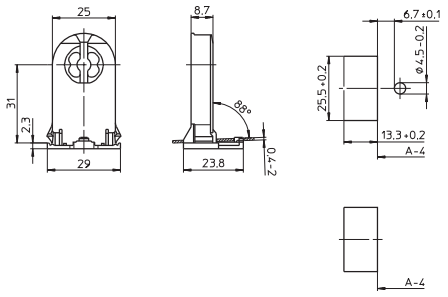



G13 push-through lampholders for lamps T8 and T12
With starter attachment
Lamp axis: 31 mm
Casing: PC, white, frontplate: PBT GF, white
T140, nominal rating: 2/500
Push-in terminals: 0.5–1 mm²
Lateral fixing clips for wall thickness 0.4–2 mm
Weight: 10.3/10.1 g, unit: 500 pcs.
Type: 28600/28601
Ref. No.: 109340 with stop
Ref. No.: 109341 without stop

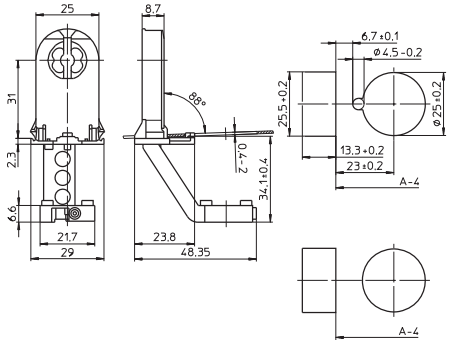



G13 push-through lampholders for lamps T8 and T12
Lamp axis: 31 mm
Casing: PC, white, rotor: PBT GF, white
T130, nominal rating: 2/500
Push-in terminals: 0.5–1 mm²
Lateral fixing clips for wall thickness 0.6–2 mm
Weight: 9.6 g, unit: 500 pcs.
Type: 28740/28741
Ref. No.: 542983 with stop
Ref. No.: 542984 without stop

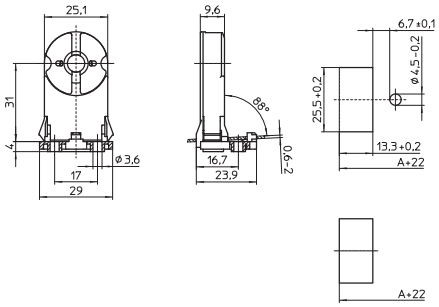



G13 push-through lampholders for lamps T8 and T12
Lamp axis: 31 mm
Casing: PC, white, rotor: PBT, white
T130, nominal rating: 2/500
Push-in terminals: 0.5–1 mm²
Lateral fixing clips for wall thickness 0.6–2 mm
Weight: 9.9 g, unit: 1000 pcs.
Type: 28500/28501
Ref. No.: 100591 with stop
Ref. No.: 100593 without stop

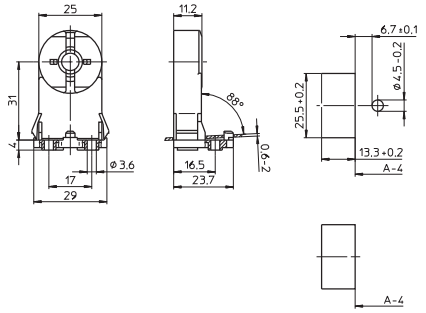



G13 push-through lampholders for lamps T8 and T12
For the automatic luminaire wiring
Lamp axis: 23 mm
Casing: PC, white, frontplate: PBT GF, white
T140, nominal rating: 2/500
IDC terminals for leads H05V-U 0.5
Lateral fixing clips for wall thickness 0.4–2 mm
Weight: 7.7/7.5 g, unit: 1000 pcs.
Type: 27780/27781
Ref. No.: 526019 with stop
Ref. No.: 526020 without stop

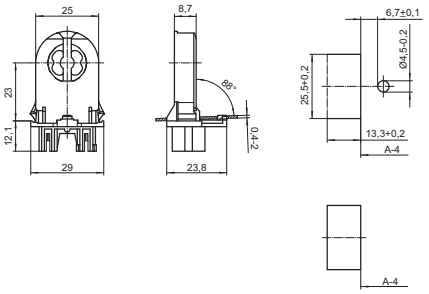



G13 push-through lampholders for lamps T8 and T12
For the automatic luminaire wiring
Lamp axis: 31 mm
Casing: PC, white, frontplate: PBT GF, white
T140, nominal rating: 2/500
IDC terminals for leads H05V-U 0.5
Lateral fixing clips for wall thickness 0.4–2 mm
Weight: 8.8/8.6 g, unit: 1000 pcs.
Type: 28580/28581
Ref. No.: 526021 with stop
Ref. No.: 526022 without stop

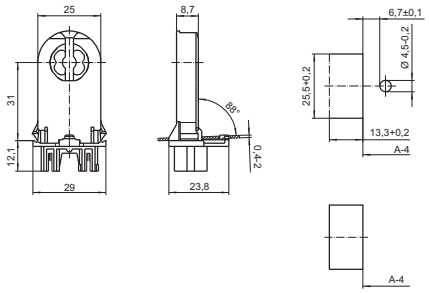



G13 Push-fit Lampholders

For fluorescent lamps T8 (T26), T12 (T38)

Lampholders with integrated starter holder
are equipped with big rotor and have
push-in twin terminals for the lamp circuit and
push-in terminals for the the starter circuit.
Pin support for reliable contact

Casing: PC, white, frontplate/rotor: PBT GF, white
Max. permitted temperature T_m
on the rear side of the lampholder: 110 °C
T-Marking acc. to IEC
IP50 version: push-fit foot with gasket

G13 Rotoclic push-fit lampholders for lamps T8 and T12
T140, nominal rating: 2/500, suitable for Top Test
Lateral push-in terminals: 0.5–1 mm²
Push-fit foot for luminaire cut-out 13.3×25.5 mm
with wall thickness 0.6–1 mm
Lampholder foot/luminaire: IP40 (537135: IP50)
Weight: 5.9/5.9/6/6 g, unit: 1000 pcs.
Type: 24100/24110/24170/24150

Ref. No.: 537132 lamp axis H: 25 mm
Ref. No.: 537135 lamp axis H: 25 mm, IP50
Ref. No.: 537150 lamp axis H: 21 mm
Ref. No.: 537144 lamp axis H: 18 mm



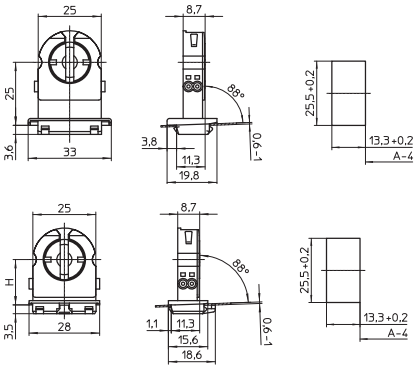

G13 push-fit lampholders with starter attachment
for lamps T8 and T12, lamp axis H: 25 mm
T130, nominal rating: 2/500
Lateral push-in terminals: 0.5–1 mm²
Push-fit foot for luminaire cut-out 13.3×25.5 mm
with wall thickness 0.6–1 mm
Lampholder foot/luminaire: IP40 (100540: IP50)
Weight: 10.4/12 g, unit: 1000/500 pcs.
Type: 27200/27201

Ref. No.: 100536 IP40
Ref. No.: 100540 IP50



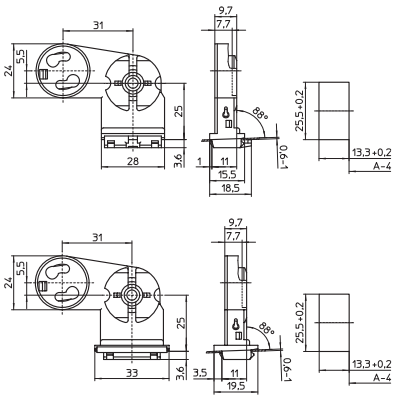

G13 Rotoclic push-fit lampholders for lamps T8 and T12
T140, nominal rating: 2/500, suitable for Top Test
Lateral push-in terminals: 0.5–1 mm²
Push-fit foot for luminaire cut-out 10×20 mm
with wall thickness 0.6–1 mm
Lampholder foot/luminaire: IP40
Weight: 5.7/6 g, unit: 1000 pcs.
Type: 24120/24160

Ref. No.: 537138 lamp axis H: 25 mm
Ref. No.: 537147 lamp axis H: 21 mm



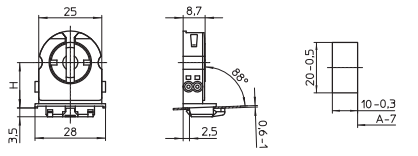

G13 push-fit lampholders for lamps T8
Lamp axis: 18 mm
T130, nominal rating: 2/500
Push-in terminals: 0.5–1 mm²
Push-fit feet for luminaire cut-out 13.3×25.5 mm
with wall thickness 0.7 mm
Weight: 6 g, unit: 1000 pcs.
Type: 27151

Ref. No.: 100532



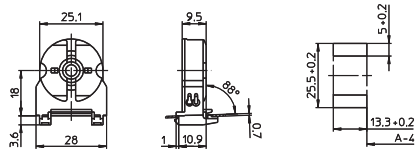

G13 Rotoclic push-fit lampholders for lamps T8
T140, nominal rating: 2/500
Base push-in terminals: 0.5–1 mm²
Base split pins for wall thickness up to 1.2 mm
Lampholder foot/luminaire: IP40
Weight: 5.9/5.7 g, unit: 1000 pcs.
Type: 24360/24350
Ref. No.: 537155 lamp axis H: 30 mm
Ref. No.: 537153 lamp axis H: 23.5 mm

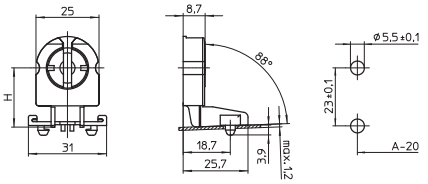



G13 Rotoclic push-fit lampholders for lamps T8
T140, nominal rating: 2/500
Suitable for Top Test
Lateral push-in terminals: 0.5–1 mm²
Base split pins for wall thickness up to 1.2 mm
Lampholder foot/luminaire: IP40
Weight: 6/5.8/5.3 g, unit: 1000 pcs.
Type: 23360/23350/23370
Ref. No.: 537160 lamp axis H: 30 mm
Ref. No.: 537157 lamp axis H: 23.5 mm
Ref. No.: 539128 lamp axis H: 18 mm

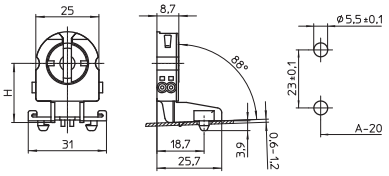



G13 push-fit lampholders with starter attachment for lamps T8
T130, nominal rating: 2/250
Base push-in terminals: 0.5–1 mm²
Base split pins for wall thickness up to 1.2 mm
Lampholder foot/luminaire: IP40
Weight: 9.7/9.5 g, unit: 1000 pcs.
Type: 27460/27450
Ref. No.: 100559 lamp axis H: 30 mm
Ref. No.: 100557 lamp axis H: 23.5 mm

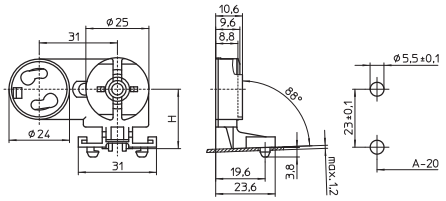

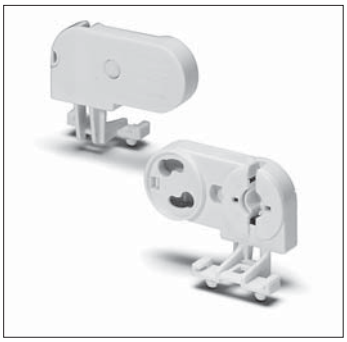

G13 push-fit lampholders for lamps T8 and T12
Lamp axis H: 25 mm
T130, nominal rating: 2/500
Base push-in terminals: 0.5–1 mm²
Push-fit foot for luminaire cut-out 13.3 x 25.5 mm with wall thickness 0.5–1 mm
Lampholder foot/luminaire: IP40
Weight: 5/11 g, unit: 500 pcs.
Type: 28100/28200
Ref. No.: 100585
Ref. No.: 100588 with starter attachment

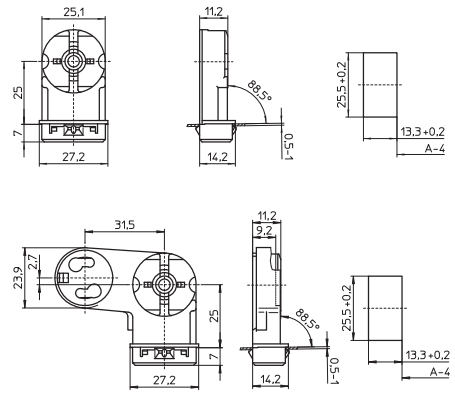



G13 push-fit lampholder for lamps T8
For the automatic luminaire wiring
Lamp axis: 21 mm
T130, nominal rating: 2/250
IDC terminals for leads H05V-U 0.5
Base split pins for wall thickness up to 1 mm
The lampholder is wired in its horizontal position
before being brought into its vertical service position
Weight: 6.7 g, unit: 1000 pcs.
Type: 48230
Ref. No.: 108730

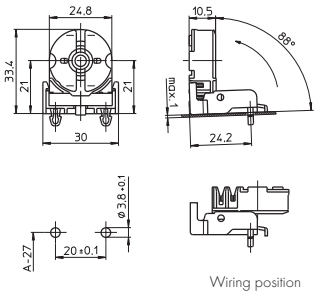



G13 push-fit lampholder for lamps T8
For the automatic luminaire wiring
Lamp axis: 31 mm
T130, nominal rating: 2/500
IDC terminals for leads H05V-U 0.5
Base split pins for wall thickness up to 1 mm
Weight: 7.2 g, unit: 1000 pcs.
Type: 28310
Ref. No.: 506007

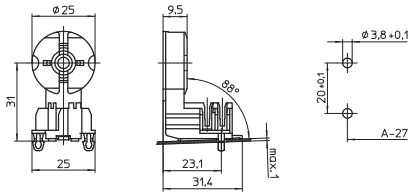

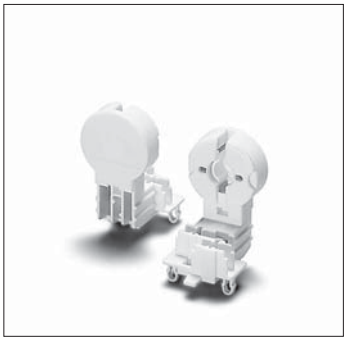

G13 push-fit lampholder for lamps T8
For the automatic luminaire wiring
Lamp axis: 26.5 mm
T130, nominal rating: 2/500
IDC terminals for leads H05V-U 0.5
Base split pins for wall thickness up to 1 mm
Weight: 7.1 g, unit: 1000 pcs.
Type: 28315
Ref. No.: 504202

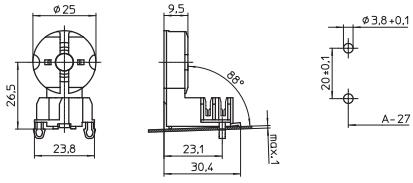



G13 push-fit lampholder for lamps T8
For the automatic luminaire wiring
Lamp axis: 31 mm
T130, nominal rating: 2/500
IDC terminals for leads H05V-U 0.5
Lateral push-in twin terminals: 0.5–1 mm²
Base split pins for wall thickness up to 1 mm
Front cable holder for up to 3 individual conductors
Weight: 8 g, unit: 1000 pcs.
Type: 28330
Ref. No.: 508423

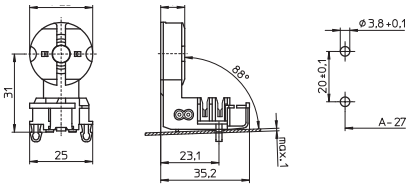



G13 push-fit lampholders
Lamp axis: 25 mm
T130, nominal rating: 5/500
Lateral and base push-in terminals: 0.5–1 mm²
Push-fit foot for luminaire cut-out 10x20 mm
for wall thickness 0.4–1 mm
Weight: 6/8.5 g, unit: 500 pcs.
Type: 28921/28920
Ref. No.: 108438 for lamps T8 and T12
Ref. No.: 108437 for lamps T8
with starter attachment

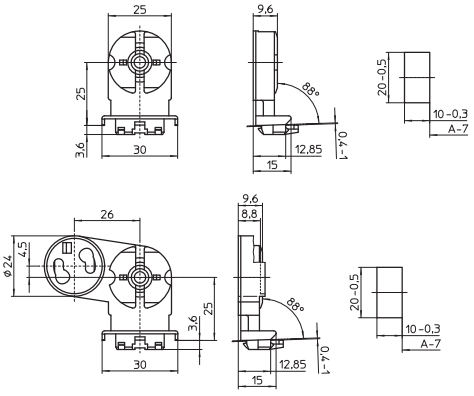



G13 Push-fit Twin Lampholders, Accessories

For fluorescent lamps T8 (T26), T12 (T38)

Casing: PC, white, rotor: PBT GF, white
Pin support for reliable contact
Max. permitted temperature T_m
on the rear side of the lampholder: 110 °C

G13 twin lampholder for lamps T8
Lamp axis: 22 mm
Distance between two lamp axes: 50 mm
T130, nominal rating: 2/500
Base wiring
Push-in terminals: 0.5–1 mm²
Push-fit foot for wall thickness 1 mm
Weight: 14 g, unit: 400 pcs.
Type: 22900
Ref. No.: 108984

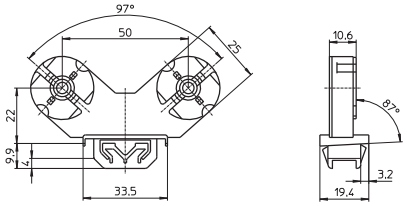



G13 twin lampholders for lamps T8 and T12
Lamp axis: 25 mm
Distance between two lamp axes: 76 mm
T130, nominal rating: 2/500
Base push-in twin terminals: 0.5–1 mm² (lamp circuit)
Base push-in terminals: 0.5–1 mm² (starter circuit)
Push-fit foot for wall thickness 0.6–1 mm
Weight: 21 g, unit: 200/500 pcs.
Type: 22604/22602 without starter attachment
Ref. No.: 108816 with stop
Ref. No.: 100487 without stop
Type: 22600/22601 with starter attachment
Ref. No.: 100484 with stop
Ref. No.: 100486 without stop

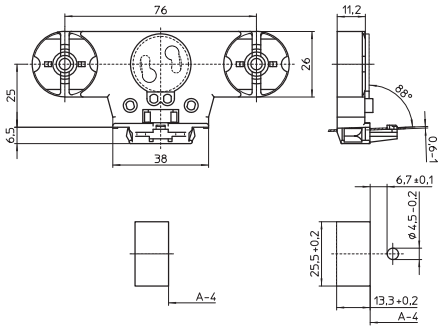



G13 twin lampholders for lamps T8 and T12
Lamp axis: 31.5 mm
Distance between two lamp axes: 76 mm
T130, nominal rating: 2/500
For wiring inserts 108777/108778
and 545261/545262
Weight: 17 g, unit: 250 pcs.
Type: 22800/22801
Ref. No.: 108773 with starter attachment
Ref. No.: 108775 without starter attachment

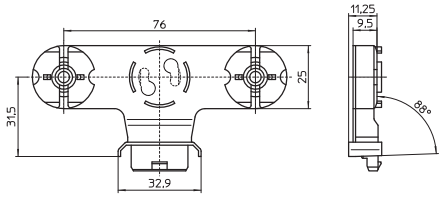



Wiring inserts with push-fit foot
For G13 twin lampholders 108773/108775
Material: PC, white
Push-in terminals: 0.5 mm²
For the automatic luminaire wiring:
IDC terminals for leads H05V-U 0.5
Weight: 5.3 g, unit: 500 pcs.
Type: 22850/22851
Ref. No.: 108777 with stop
Ref. No.: 108778 without stop

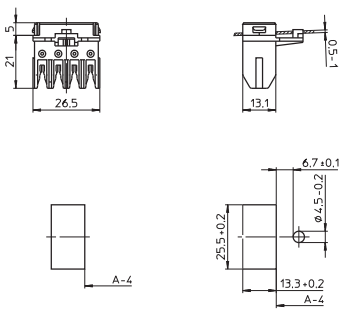



Wiring inserts with push-fit foot
For G13 twin lampholders 108773/108775
Material: PC, white
Push-in terminals: 0.5–1 mm²
Weight: 4.4 g, unit: 500 pcs.
Type: 22860/22861

new **Ref. No.: 545261** with stop
new **Ref. No.: 545262** without stop

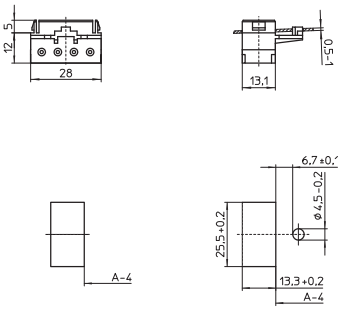



G13 Built-in Lampholders

For fluorescent lamps T8 (T26), T12 (T38)

Lampholders with integrated starter holder
are equipped with big rotor and have
push-in twin terminals for the lamp circuit and
push-in terminals for the the starter circuit.
Pin support for reliable contact
(except for type 485)

Casing: PC, white, frontplate/rotor: PBT GF, white
Max. permitted temperature T_m
on the rear side of the lampholder: 110 °C
T-Marking acc. to IEC

G13 built-in lampholders for lamps T8 and T12
Lampholder thickness: 13 mm
T140, nominal rating: 2/500
Push-in terminals: 0.5–1 mm²
Rear split pins for wall thickness up to 1.2 mm
Weight: 4.6/5.4 g, unit: 1000 pcs.
Type: 47105/47106
Ref. No.: 509152
Ref. No.: 509154 with spring adjustment

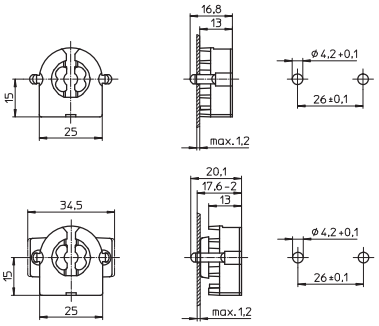



G13 built-in lampholders for lamps T8 and T12
Lampholder thickness: 9.5 mm
T140, nominal rating: 2/500
Push-in terminals: 0.5–1 mm²
Rear split pins for wall thickness up to 1.2 mm
Weight: 4.4/5.1 g, unit: 1000 pcs.
Type: 47505/47506
Ref. No.: 509162
Ref. No.: 509164 with spring adjustment

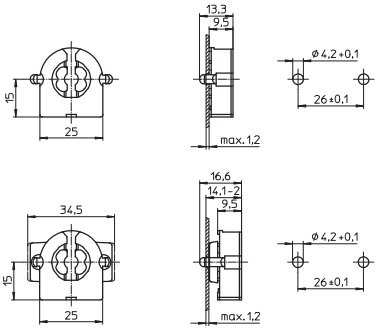



G13 built-in lampholder for lamps T8 and T12
Lampholder thickness: 10.5 mm
T140, nominal rating: 2/500
Push-in terminals: 0.5–1 mm²
Weight: 4.6 g, unit: 1000 pcs.
Type: 47304
Ref. No.: 509156

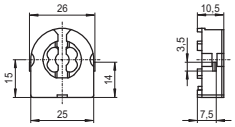



G13 Rotoclic built-in lampholders for lamps T8 and T12
T140, nominal rating: 2/500
Base push-in terminals: 0.5–1 mm²
Fixing holes Ø 3.2 mm
Weight: 5 g, unit: 1000 pcs.
Type: 49100/49500
Ref. No.: 537165 lampholder thickness: 13 mm
Ref. No.: 537173 lampholder thickness: 9.5 mm

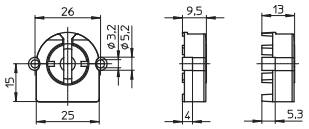



G13 built-in lampholders with spring adjustment
for lamps T8 and T12
T130, nominal rating: 2/500
Base push-in terminals: 0.5–1 mm²
Fixing holes for screws M3
Weight: 6/5.5 g, unit: 1000 pcs.
Type: 47102/47502
Ref. No.: 101681 lampholder thickness: 13 mm
Ref. No.: 101740 lampholder thickness: 9.5 mm

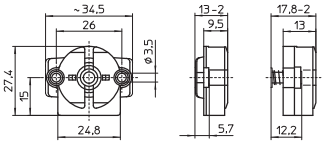



G13 Rotoclic built-in lampholders for lamps T8 and T12
T140, nominal rating: 2/500
Lateral push-in terminals: 0.5–1 mm²
Suitable for Top Test
Fixing holes Ø 3.2 mm
Weight: 5/4.7 g, unit: 1000 pcs.
Type: 59100/59500
Ref. No.: 537181 lampholder thickness: 13 mm
Ref. No.: 537205 lampholder thickness: 9.5 mm

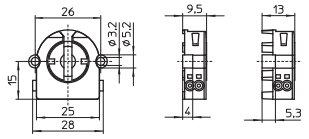



G13 built-in lampholders with starter attachment
for lamps T8 and T12
T130, nominal rating: 2/500
Base push-in terminals: 0.5–1 mm²
Fixing holes for screws M3
Weight: 8.7/10.3/8 g, unit: 1000 pcs.
Type: 47200/47402 lampholder thickness: 13 mm
Ref. No.: 101706
Ref. No.: 101708 with spring adjustment
Type: 47600 lampholder thickness: 9,5 mm
Ref. No.: 101765

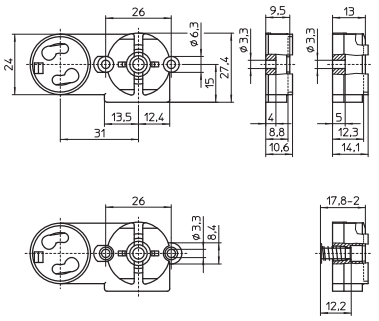



G13 Rotoclic built-in lampholders for lamps T8 and T12
T140, nominal rating: 2/500
Base push-in terminals: 0.5–1 mm²
Rear split pins for wall thickness up to 1.2 mm
Weight: 5.1/5.9/5/5.5 g, unit: 1000 pcs.
Type: 49105/49106 lampholder thickness: 13 mm
Best.-Nr.: 537166
Best.-Nr.: 537167 with spring adjustment
Type: 49505/49506 lampholder thickness: 9.5 mm
Best.-Nr.: 537174
Best.-Nr.: 537175 with spring adjustment

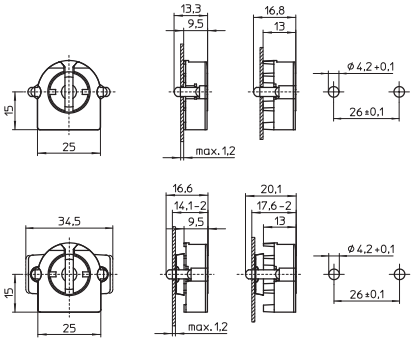



G13 Rotoclic built-in lampholders for lamps T8 and T12
T140, nominal rating: 2/500
Lateral push-in terminals: 0.5–1 mm², suitable for Top Test
Rear split pins for wall thickness up to 1.2 mm
Weight: 5.1/5.9/5/5.5 g, unit: 1000 pcs.
Type: 59105/59106 lampholder thickness: 13 mm
Ref. No.: 537182
Ref. No.: 537183 with spring adjustment
Type: 59505/59506 lampholder thickness: 9.5 mm
Ref. No.: 537206
Ref. No.: 537207 with spring adjustment

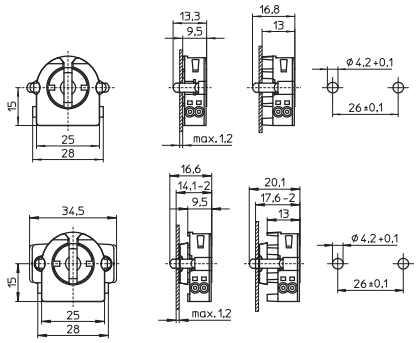



G13 built-in lampholders with starter attachment
for lamps T8 and T12, T130, nominal rating: 2/500
Base push-in terminals: 0.5–1 mm²
Rear split pins for wall thickness up to 1.2 mm
Weight: 9/9.5/8/8.5 g, unit: 1000 pcs.
Type: 47205/47206 lampholder thickness: 13 mm
Ref. No.: 101712
Ref. No.: 101716 with spring adjustment
Type: 47605/47606 lampholder thickness: 9.5 mm
Ref. No.: 101769
Ref. No.: 101773 with spring adjustment

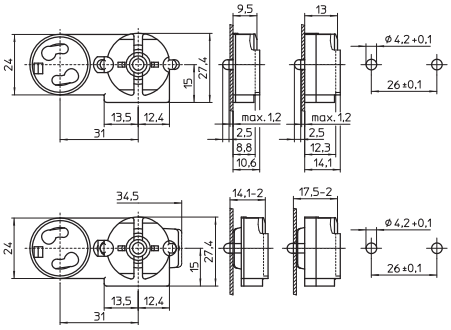

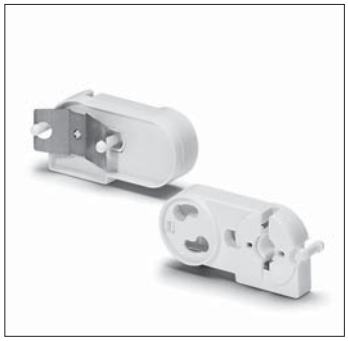

G13 built-in lampholders for lamps T8
For the automatic luminaire wiring
T130
Nominal rating: 2/500, lampholder thickness:
10.5 mm, IDC terminals for leads H05V-U 0.5
Rear split pins for wall thickness up to 1.2 mm
Weight: 5/5.5 g, unit: 1000 pcs.
Type: 48205/48206
Ref. No.: 507133
Ref. No.: 507134 with spring adjustment

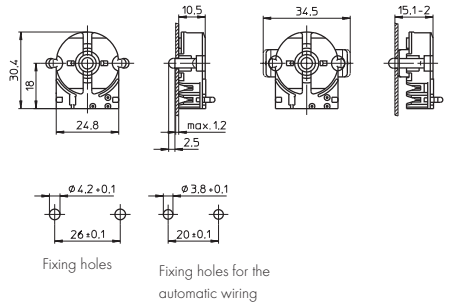



G13 built-in lampholder for lamps T8 and T12
Lampholder thickness: 10.7 mm
T130
Nominal rating: 2/500
Push-in terminals: 0.5–1 mm²
Lateral fixing clips
Weight: 4.7 g, unit: 1000 pcs.
Type: 47504
Ref. No.: 101745

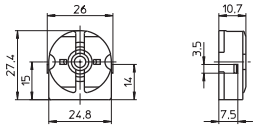



G13 lampholder
For push-fitting onto lamps T12
Lampholder thickness: 9.5 mm
Casing: PC, white, T110
Front cover plate: PBT GF, white
Nominal rating: 2/250
Push-in terminals: 0.5–1 mm²
Fixing holes for screws M3
Weight: 10.5 g, unit: 1000 pcs.
Type: 47700
Ref. No.: 101781

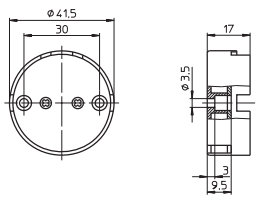



G13 lampholder
For push-fitting onto lamps T8
Lampholder thickness: 9.5 mm
Casing: PC, white, T110
Front cover plate: PBT GF, white
Nominal rating: 2/500
Push-in terminals: 0.5–1 mm²
Fixing hole for screw M3
Weight: 5.3 g, unit: 1000 pcs.
Type: 47900
Ref. No.: 101784

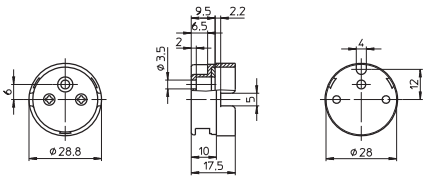



G13 lampholder with starter attachment
For push-fitting onto lamps T8
Lampholder thickness: 9.5 mm
Casing: PC, white, T110
Front cover plate: PBT GF, white
Nominal rating: 2/250
Push-in terminals: 0.5–1 mm²
Fixing hole for screw M3
Weight: 8.1 g, unit: 1000 pcs.
Type: 47920
Ref. No.: 101785

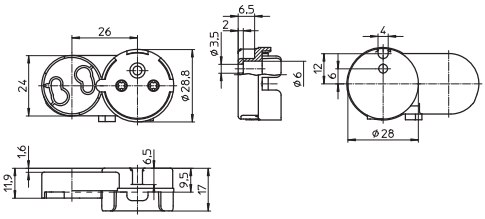



Endbox with integrated G13 lampholder
for lamps T8 and T12
For recessed luminaires in modular ceilings
T130, nominal rating: 2/500
Push-in terminals: 0.5–0.75 mm², single-core
For the automatic luminaire wiring:
IDC terminals for leads H05V-U 0.5
Clip fixing for wall thickness up to 1 mm
Weight: 20.8 g, unit: 200 pcs.
Type: 48300
Ref. No.: 109487

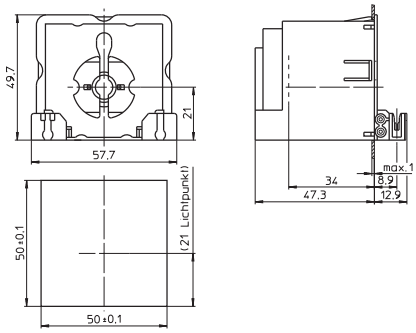

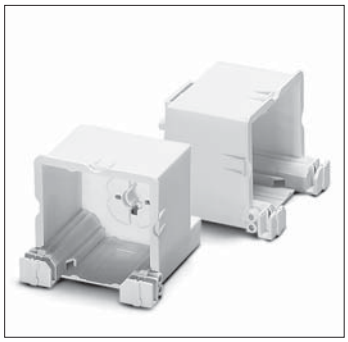

G13 built-in lampholder with lamp lock
for lamps T8 and T12
Contacts on both sides
Casing: PBT GF, white, T130, nominal rating: 2/500
Screw terminals: 0.5–2.5 mm²
Fixing holes for screws M3
Weight: 12.9/18 g, unit: 500 pcs.
Type: 46100/46101
Ref. No.: 101643
Ref. No.: 101647 with spring adjustment

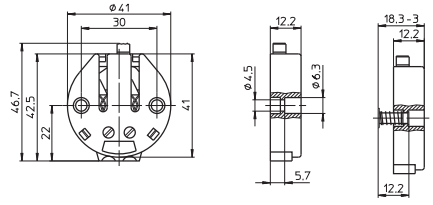



G13 built-in lampholders for lamps T8 and T12
Casing: PC, white, T110
Nominal rating: 2/500
Screw terminals: 0.5–2.5 mm²
Fixing holes for screws M3
5 rotation stops
Weight: 9/10.6 g, unit: 1000 pcs.
Type: 48500/48501
Ref. No.: 101787
Ref. No.: 101789 with spring adjustment

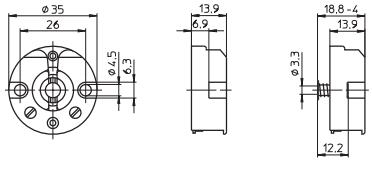



G13 built-in lampholder with spring adjustment
for lamps T8 and T12
Contacts on both sides
Casing: PBT GF, white, T130
Nominal rating: 2/500
Screw terminals: 0.5–2.5 mm²
Fixing holes for screws M3
Front lamp insertion
Weight: 14 g, unit: 500 pcs.
Type: 49401
Ref. No.: 101812

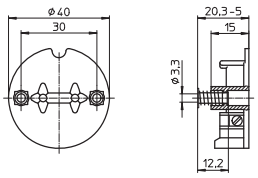



G13 Surface-mounted Lampholders

For fluorescent lamps T8 (T26), T12 (T38)

Pin support for reliable contact
(except for type 485)
Max. permitted temperature T_m
on the rear side of the lampholder: 110 °C

G13 surface-mounted lampholder for lamps T8 and T12
Lamp axis: 25.5 mm
Casing: PC, white, rotor: PBT GF, white, T130
Nominal rating: 2/500
Push-in twin terminals: 0.5–1 mm²
Fixing hole: Ø 3.8 mm
Weight: 7.2 g, unit: 500 pcs.
Type: 27722
Ref. No.: 100572

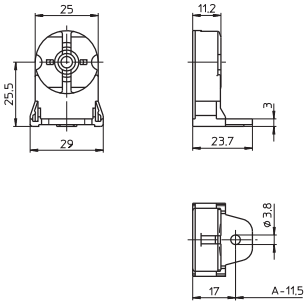



G13 surface-mounted lampholder with starter attachment
for lamps T8 and T12
Lamp axis: 25.5 mm
Casing: PC, white, rotor: PBT GF, white, T130
Nominal rating: 2/500
Push-in twin terminals: 0.5–1 mm²
Fixing hole: Ø 3.8 mm
Weight: 9.5 g, unit: 500 pcs.
Type: 27822
Ref. No.: 100583

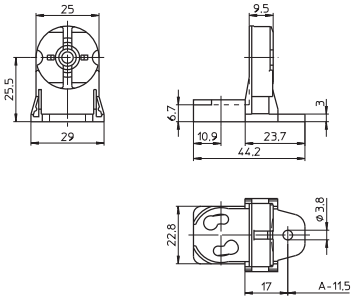



G13 surface-mounted lampholder for lamps T8
Lamp axis: 17 mm
Casing: PC, white, rotor: PBT GF, white, T130
Nominal rating: 2/250
Push-in twin terminals: 0.5–1 mm²
Fixing hole for self-tapping screw
acc. to ISO 1481/7049-ST3.5-C/F
Weight: 5.4 g, unit: 1000 pcs.
Type: 27356
Ref. No.: 100551

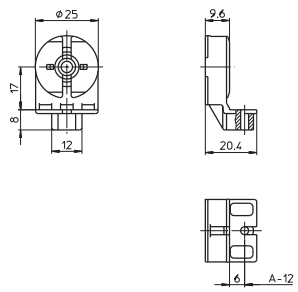

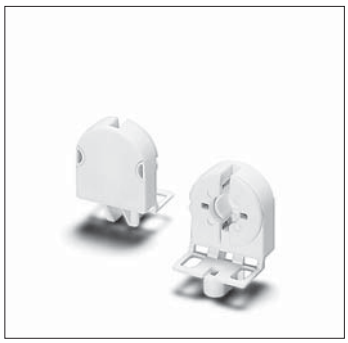

G13 surface-mounted lampholders with lamp lock
for lamps T8 and T12, lamp axis: 25 mm
Contacts on both sides
Casing: PBT GF, white, T130
Screw terminals: 0.5–2.5 mm², nominal rating: 2/500
Bracket: zinc-coated polished steel
Fixing slots for screws M4
Weight: 35/36 g, unit: 500 pcs.
Type: 46102/46103
Ref. No.: 101651
Ref. No.: 101655 with spring adjustment

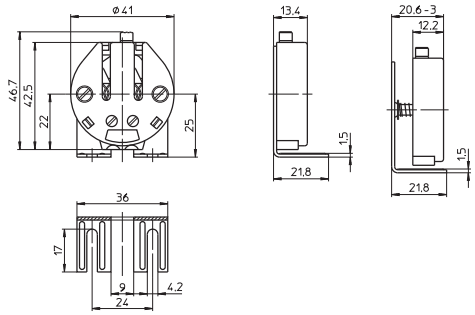



G13 surface-mounted lampholders
for lamps T8 and T12
Lamp axis: 25 mm, casing: PC, white, T110
Screw terminals: 0.5–2.5 mm², nominal rating: 2/500
Bracket: zinc-coated polished steel
Fixing slots for screws M4
5 rotation stops
Weight: 26/28.1 g, unit: 500 pcs.
Type: 48502/48503
Ref. No.: 101791
Ref. No.: 101793 with spring adjustment

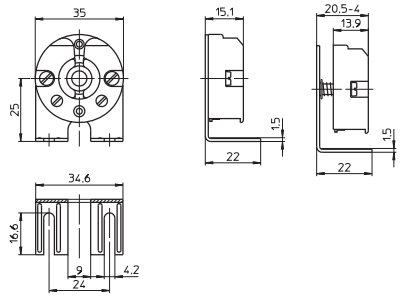

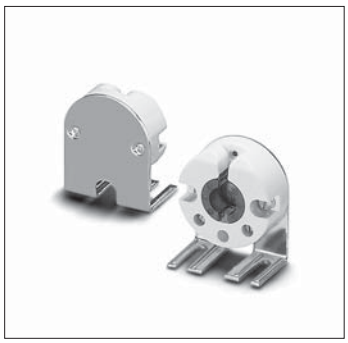

Accessories

For lampholders for fluorescent lamps T8 (T26), T12 (T38)

The luminaire manufacturer is responsible for
the right choice of accessories.

Lamp supports
Fixing hole for screw M4
Weight: 4.3/6.8 g, unit: 500 pcs.
Type: 20400 for lamps T8
Ref. No.: 100442 material: zinc-coated
polished steel
Type: 20401 for lamps T12
Ref. No.: 100444 material: CrNi-steel

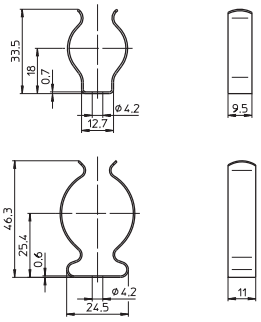



Lamp supports for lamps T8
Material: PC, crystal-clear
Fixing hole for screw M4
Weight: 2 g, unit: 1000 pcs.
Type: 20501
Ref. No.: 100448

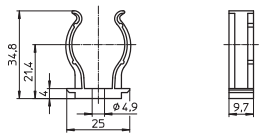



Push-fit bracket
For G13 built-in lampholder 537174, 537206
(see p. 324–325) and starter holder 101627
and 109792 (see p. 341–342), material: PC, white
Lamp axis optional: 46/51/56 mm
or 43 mm (lateral lamp insertion)
Push-fit foot for wall thickness 0.5–1 mm
Option for lateral or base wiring
Weight: 5.3 g, unit: 1000 pcs.
Type: 97532
Ref. No.: 105843

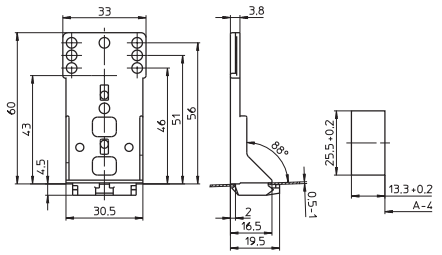



Push-fit bracket
For G13 built-in lampholder 537181, 537166, 537174
(see p. 324), 537206 and 507133 (see p. 325)
Material: PC, grey
Lamp axis optional: 33/40/46/51/56
or 43 mm (lateral lamp insertion)
Push-fit foot for wall thickness 0.5–1 mm
Weight: 6 g, unit: 1000 pcs.
Type: 97044
Ref. No.: 108780

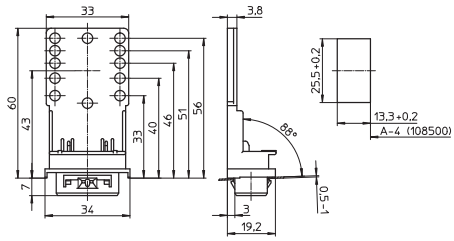

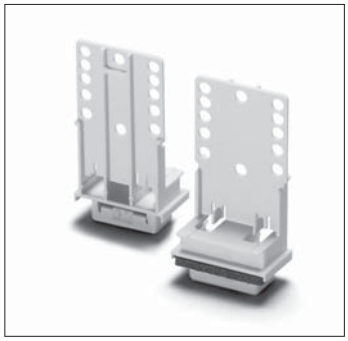

Foot gasket for degree of protection IP50
For push-fit bracket 108780
Material: EPDM, black
Weight: 0.7 g
Type: 98003
Ref. No.: 108266

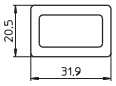

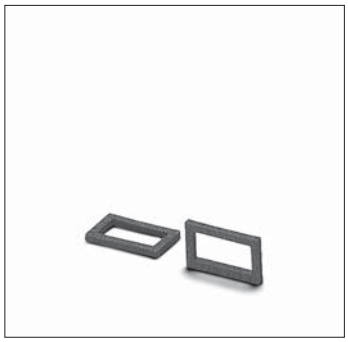

Push-fit bracket, right
For G13 built-in lampholders 101769, 537174
and 537206 (see p. 324–325)
Material: PC, white
Lamp axis optional: 25/45 mm, distance
between two lamp axes optional: 30/35 mm
Push-fit foot for wall thickness 0.5–1 mm
Option for lateral or base wiring
Weight: 6.6 g, unit: 1000 pcs.
Type: 97533
Ref. No.: 105845

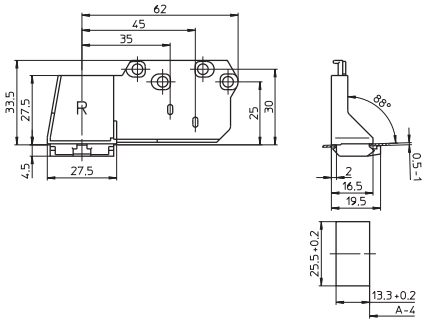

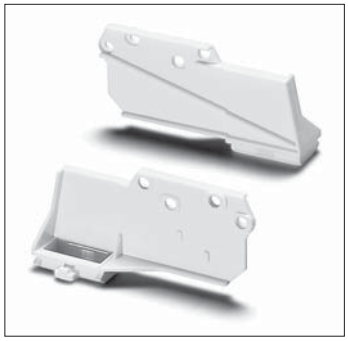

Push-fit bracket, left
For G13 built-in lampholders 537174, 537206
(see p. 324–325)
Material: PC, white
Lamp axis optional: 25/45 mm, distance
between two lamp axes optional: 30/35 mm
Push-fit foot for wall thickness 0.5–1 mm
Option for lateral or base wiring
Weight: 6.7 g, unit: 1000 pcs.
Type: 97534
Ref. No.: 105847

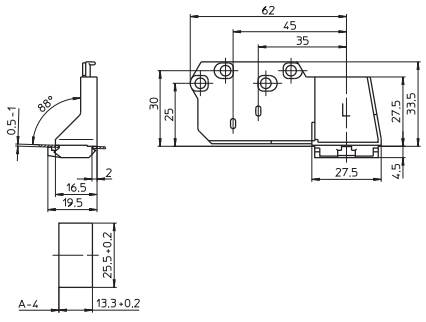

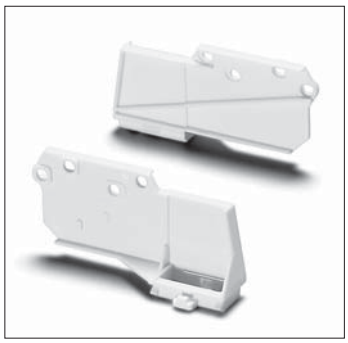

Cable holder
Material: PA, white
Push-fit foot for cut-out Ø 4 mm
for wall thickness 0.6–1.2 mm
Weight: 0.2 g, unit: 5000 pcs.
Type: 97147
Ref. No.: 109086

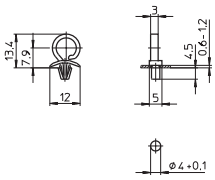



Cable holder
For the automatic luminaire wiring
and manual wiring
Material: PC, white
Degree of protection IP50
Weight: 0.5 g, unit: 5000 pcs.
Type: 97117
Ref. No.: 108845

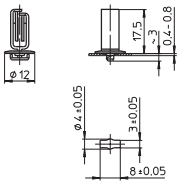



Cable holder
For the automatic luminaire wiring
and manual wiring
Material: PA, white
Weight: 2.1 g, unit: 7500 pcs.
Type: 0607
Ref. No.: 159968

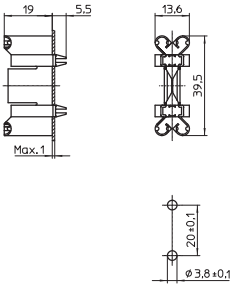



G13 Lampholders, Degree of Protection IP54

For fluorescent lamps T8 (T26), T12 (T38)
For luminaires of protection class I and II

Lampholders protected against dust and splashing water (IP54)
To convert luminaires from IP20 to IP54
Pin support for reliable contact
With spring adjustment

Max. permitted temperature T_m on the rear side of the lampholder: 110 °C

G13 push-fit lampholder for lamps T8/T12
Casing: PC, white, interior part: PBT GF, white
Rotor: PBT GF, white, T140
Nominal rating: 2/500
Push-in terminals: 0.5–1 mm²
Fixing clips for wall thickness 0.7 mm
Screw rings see page 335
Weight: 17.1 g, unit: 500 pcs.
Type: 84171 system 161
Ref. No.: 107957

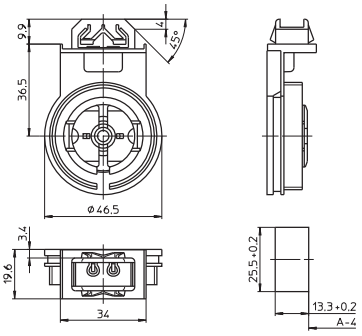



G13 push-fit twin lampholder for lamps T8/T12
Casing: PC, white, interior part: PBT GF, white
Rotor: PBT GF, white, T140
Nominal rating: 2/500
Push-in terminals: 0.5–1 mm²
Fixing clips for wall thickness 0.7 mm
Screw rings see page 335
Weight: 33.6 g, unit: 250 pcs.
Type: 84173 system 162
Ref. No.: 107959

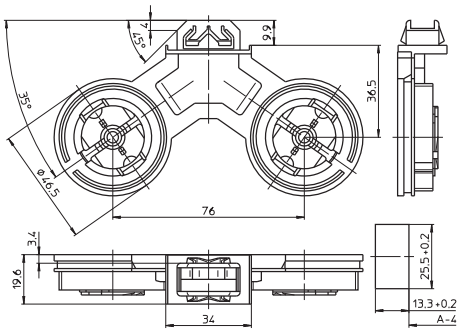



Food gasket for degree of protection IP54
For lampholder systems 161, 162
Material: EPDM, black
Weight: 0.7 g
Type: 98003
Ref. No.: 108266

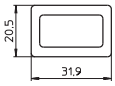

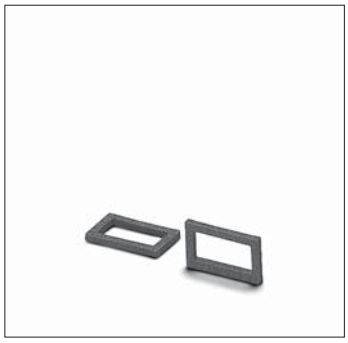

G13 Lampholders, Degree of Protection IP65/IP67

For fluorescent lamps T8 (T26), T12 (T38)
For luminaires of protection class I and II

Lampholders protected against dust and jet of water (IP65)
Dust and watertight lampholders (IP67)
Pin support for reliable contact with spring adjustment

Max. permitted temperature T_m on the rear side of the lampholder: 110 °C

G13 push-fit lampholders for lamps T8/T12
Casing: PC, interior part: PBT GF
Rotor: PBT GF, white, T140
Nominal rating: 2/500
Push-in terminals: 0.5–1 mm²
Fixing clips for wall thickness 1.4–2 mm
Screw rings see page 335
Weight: 17.3 g, unit: 500 pcs.
Type: 84172 system 163
Ref. No.: 107958 casing white
Ref. No.: 108666 casing grey

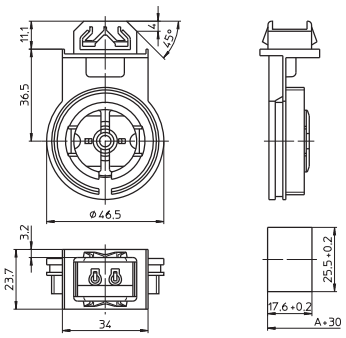



G13 push-fit twin lampholders for lamps T8/T12
Casing: PC, interior part: PBT GF
Rotor: PBT GF, white, T140
Nominal rating: 2/500
Push-in terminals: 0.5–1 mm²
Fixing clips for wall thickness 1.4–2 mm
Screw rings see page 335
Weight: 34.2 g, unit: 250 pcs.
Type: 84174 system 164
Ref. No.: 107960 casing white
Ref. No.: 108669 casing grey

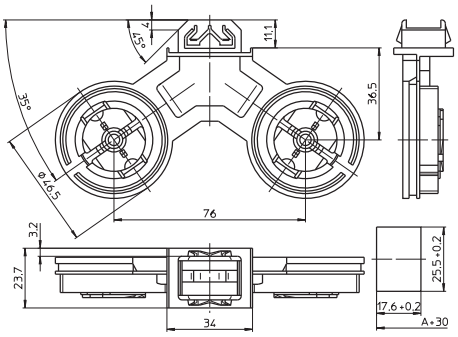



G13 push-fit lampholders for lamps T8/T12
Casing: PC, interior part: PBT GF, T140
Nominal rating: 2/500
Push-in terminals: 0.5–1 mm²
Fixing clips for wall thickness 1.4–2 mm
With slot insertion
Screw rings see page 335
Weight: 14.5 g, unit: 250 pcs.
Type: 84175 system 165
Ref. No.: 108608 casing white
Ref. No.: 108614 casing grey

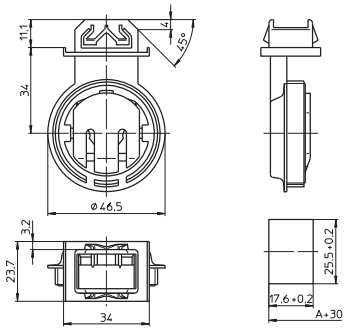



Foot gaskets
For lampholder systems 163, 164, 165
Weight: 1/1.1 g
For degree of protection IP65
Material: cellular rubber
Type: 98004
Ref. No.: 108267
For degree of protection IP67
Material: silicone, transparent
Type: 98011
Ref. No.: 504078

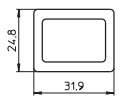

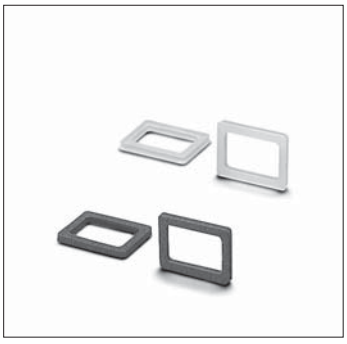

Profiled foot gasket
For degree of protection IP67
For lampholder systems 163, 164, 165
Material: EPDM, black
Weight: 1.1 g, unit: 1000 pcs.
Type: 98008
new **Ref. No.: 546254**

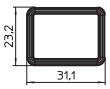



G13 lampholder for lamps T8/T12
Casing: PC, interior part: PBT GF, T140
Nominal rating: 2/500
With slot insertion
For wiring insert 108819
Screw rings see page 335
Weight: 15.1 g, unit: 500 pcs.
Type: 84180 system 167
Ref. No.: 108948 casing white

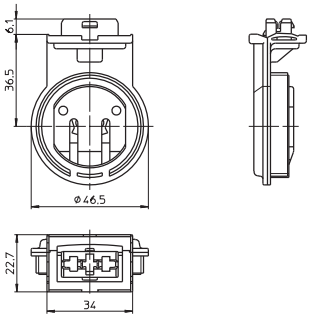



G13 twin lampholder for lamps T8/T12
Casing: PC, interior part: PBT GF, T140
Nominal rating: 2/500
With slot insertion
For wiring insert 108819
Screw rings see page 335
Weight: 30.6 g, unit: 250 pcs.
Type: 84181 system 168
Ref. No.: 108994 casing white

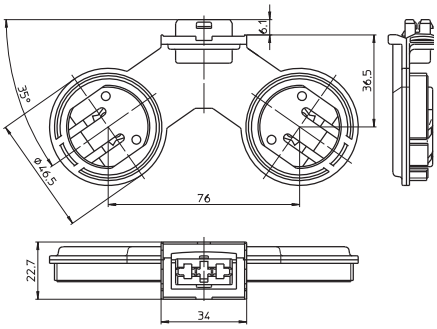



Wiring insert with push-fit foot
For lampholder systems 167, 168
Material: PC, grey
Push-in terminals: 0.5 mm²
For the automatic luminaire wiring:
IDC terminals for leads H05V-U 0.5
Push-fit foot for wall thickness 1.4–2 mm
Weight: 5.1 g, unit: 500 pcs.
Type: 22852
Ref. No.: 108819

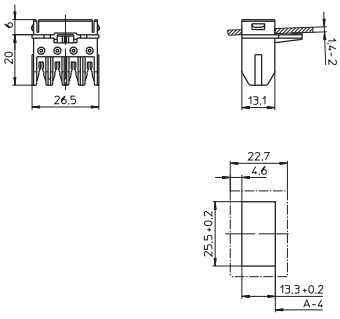



Foot gasket for degree of protection IP67
For lampholder systems 167, 168
Material: PE foam
Weight: 0.5 g
Type: 98002
Ref. No.: 108947

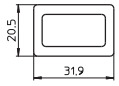

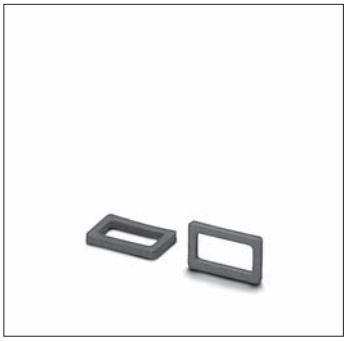

Foot gasket, profiled shape
For degree of protection IP67
For lampholder systems 167, 168
Material: EPDM, black
Weight: 0.7 g, unit: 1000 pcs.
Type: 98087
Ref. No.: 503773

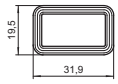

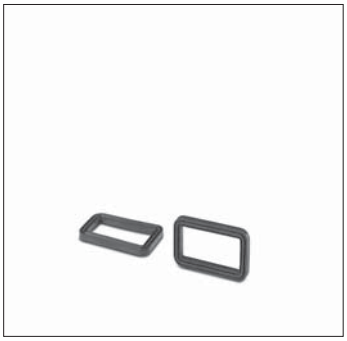

G13 lampholder for lamps T8/T12
Casing: PC, white, interior part: PBT GF, T140
Nominal rating: 2/500
Screw fixing foot with tapped holes M4
Screw rings see page 335
With slot insertion
Weight: 14 g, unit: 250 pcs.
Type: 84105 system 152
Ref. No.: 521123

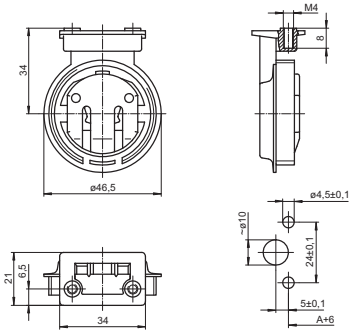



Foot gasket for degree of protection IP65/IP67
For lampholder system 152
Material: EPDM, black
Weight: 1.4 g, unit: 1000 pcs.
Type: 98085
Ref. No.: 106094

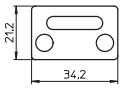

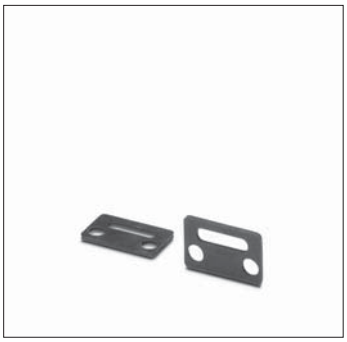

Screw Rings for G13 Lampholders, Degree of Protection IP54, IP65, IP67

For lampholder systems 152, 161, 162, 163, 164, 165, 167, 168

Screw rings
Ring: PBT GF, gasket: silicone
Weight: 17/20 g, unit: 500/250 pcs.
Type: 84122 for lamps T8
Ref. No.: 103710 white
Ref. No.: 103709 grey
Type: 84123 for lamps T12 or
for lamps T8 with protection tube Ø 38 mm
Ref. No.: 103712 white
Ref. No.: 103711 grey

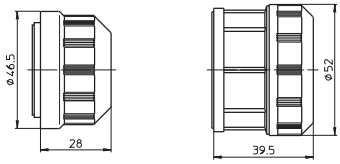



Screw rings with heat dissipator
For lamps T8 with
plastic protection tube Ø 38 mm
Ring: PBT GF
Gasket: silicone, shell: aluminium
Weight: 40 g, unit: 250 pcs.
Type: 84154
Ref. No.: 103744 white
Ref. No.: 103743 grey

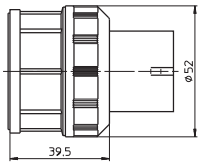



Screw rings
For protection tube Ø 50 mm
Ring: PBT GF
Gasket: EPDM
Weight: 43.8 g, unit: 125 pcs.
Type: 84159 not suitable for system 152
Ref. No.: 103750 white
Ref. No.: 103749 grey

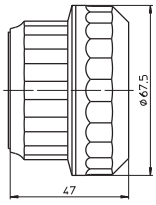

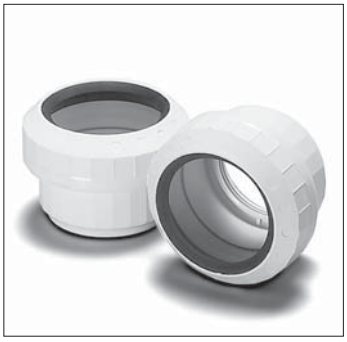

G10q Lampholders, Accessories

For fluorescent lamps T-R

G10q push-fit lampholder
Casing: PC, white, T110
Spring bracket Ø 32 mm: CrNi-steel
Nominal rating: 2/500
Push-in terminals: 0.5–1 mm²
Lamp axis: 23 mm
Push-fit foot for wall thickness up to 1.2 mm
Weight: 8.4 g, unit: 500 pcs.
Type: 40100
Ref. No.: 101528

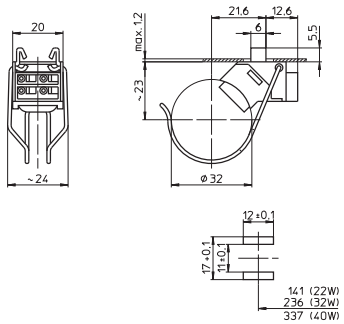



Lamp support for T-R lamps
For lampholder 101528
Material: PC, white
Spring bracket Ø 32 mm: CrNi-steel
Lamp axis: 23 mm
Push-fit foot for wall thickness up to 1.2 mm
Weight: 4.4 g, unit: 500 pcs.
Type: 40150
Ref. No.: 101532

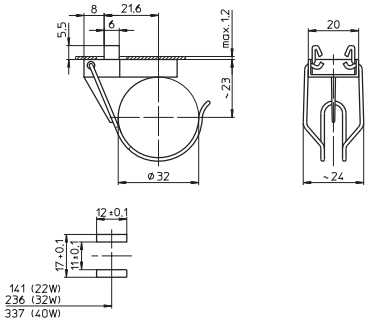



G10q surface-mounted lampholder
Casing: PC, white, T110
Spring bracket Ø 32 mm: CrNi-steel
Nominal rating: 2/250
Connection leads: H05V2-U 1X0.75,
max. 105 °C, length: 270 mm
Lamp axis: 35 mm
Fixing plates with tapped holes M4
Weight: 25 g, unit: 250 pcs.
Type: 58016
Ref. No.: 102409

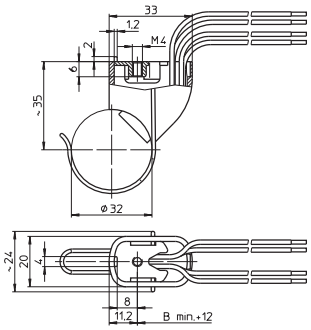



Lamp support for T-R lamps
For lampholder 102409
Material: PC, white
Spring bracket Ø 32 mm: CrNi-steel
Lamp axis: 35 mm
Fixing plates with tapped holes M4
Weight: 8 g, unit: 500 pcs.
Type: 58001
Ref. No.: 102407

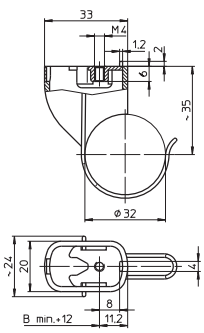



W4.3 x 8.5d Surface-mounted Lampholder

For fluorescent lamps T2 (T7)

W4.3 x 8.5d surface-mounted lampholder
Casing: PC, white, T110
Nominal rating: 2/250
Leads: H05V-K 1X0.5 max. 90 °C,
length: 450 mm, ferrules on bare end of core
Fixing hole: Ø 2.6 mm
Spring-mounted insert for reliable contact
Weight: 10.3 g, unit: 500 pcs.
Type: 09000
Ref. No.: 107536

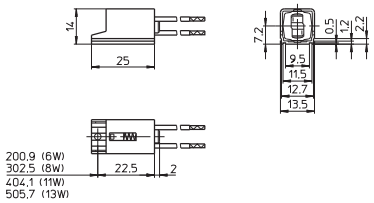



OPTIMUM START WITH COMPONENTS MADE BY VS





STARTER HOLDERS AND TERMINAL BLOCKS, ACCESSORIES

Vossloh-Schwabe provides a comprehensive range of miscellaneous accessories for operating fluorescent lamps.

Starter holders
Starters are needed for lamp circuits operated with electromagnetic ballasts. VS provides a number of starter holders with various designs for this purpose. Almost all starter holders are made of polycarbonate and qualify for a T110 temperature rating.

Terminal blocks
Furthermore, Vossloh-Schwabe's product range also includes connection terminals, some of which feature the VDE-approved IDC method in addition to the well-known and installation-friendly push-in connectors. The connection terminals therefore make it possible to automate luminaire wiring and thus wire up several terminals using a single cable.

The range is rounded off by built-in rocker switches.

4 Starter Holders and Terminal Blocks, Accessories

Starter holders, accessories **340–343**

Terminal blocks, accessories **344–348**

Built-in rocker switches **349**

Technical details for fluorescent lamps **350–379**
General technical details 533-540
Glossary 541-543

Starter Holders, Accessories

For starters acc. to DIN VDE 0712 part 101, IEC 60155

Starter holders with central studs, suitable for luminaires of protection class II, are available on request.

Starter holder
Material: PC, white
T110, nominal rating: 2/250
Push-in terminals: 0.5–1 mm²
Rear split pins for wall thickness up to 1.2 mm
Weight: 2.1 g, unit: 1000 pcs.
Type: 02113
Ref. No.: 535131

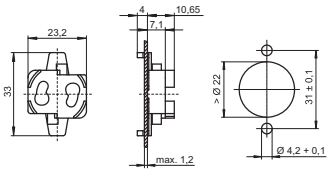



Starter holder
Material: PC, white
T110, nominal rating: 2/250
Push-in terminals: 0.5–1 mm², single-core
Front and rear split pins for wall thickness up to 1.2 mm
Rear of starter holder/luminaire: IP40
Weight: 2.8 g, unit: 1000 pcs.
Type: 02110
Ref. No.: 109784

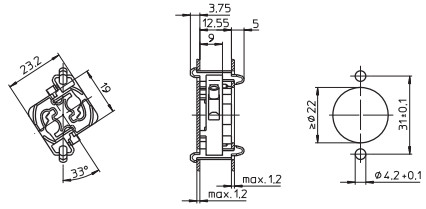



Starter holder
Material: PC, white
T110, nominal rating: 2/250
Push-in terminals: 0.5–1 mm²
Rear split pins for wall thickness up to 1.2 mm
Lateral split pins for wall thickness up to 1.25 mm
Rear of starter holder/luminaire: IP40
Weight: 3.7 g, unit: 1000 pcs.
Type: 02120
Ref. No.: 100064

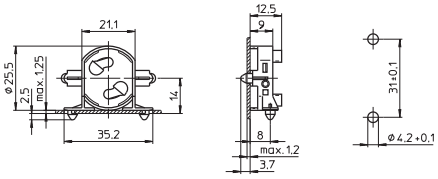



Starter holder
Material: PC, white
T110, nominal rating: 2/250
Push-in terminals: 0.5–1 mm²
Fixing holes for screws M3
Weight: 3.8 g, unit: 1000 pcs.
Type: 02150
Ref. No.: 100069

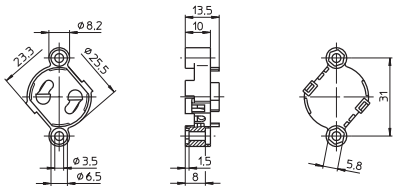



Starter holder
Material: PC, white
T110, nominal rating: 2/250
Push-in terminals: 0.5–1 mm²
Front split pins, flat
for wall thickness 0.6–1 mm
Weight: 3.1 g, unit: 1000 pcs.
Type: 02170
Ref. No.: 106818

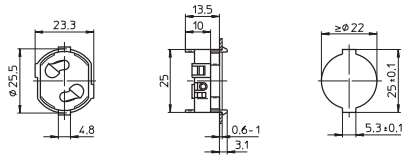



Starter holder
Material: PC, white
T110, nominal rating: 2/250
Push-in terminals: 0.5–1 mm²
Rear split pins for wall thickness up to 1.2 mm
Rear of starter holder/luminaire: IP40
Weight: 3.3 g, unit: 1000 pcs.
Type: 43000
Ref. No.: 101627

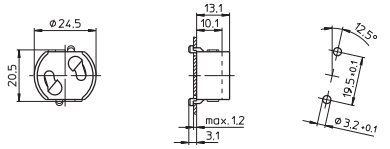



Starter holder
Material: PC, white
T110, nominal rating: 2/250
Push-in terminals: 0.5–1 mm²
Lateral split pins for wall thickness up to 1 mm
Rear of starter holder/luminaire: IP40
Weight: 3.4 g, unit: 1000 pcs.
Type: 43010
Ref. No.: 101629

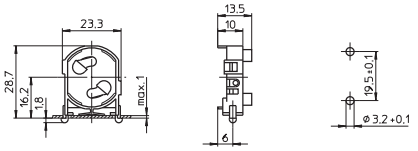



Starter holder
Material: PC, white
T110, nominal rating: 2/250
Push-in terminals: 0.5–1 mm²
Rear and lateral split pins
for wall thickness up to 1 mm
Rear of starter holder/luminaire: IP40
Weight: 3.5 g, unit: 1000 pcs.
Type: 43020
Ref. No.: 108671

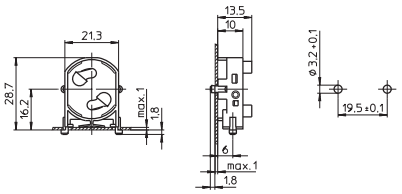



Starter holder
Material: PC, white
T110, nominal rating: 2/250
Push-in terminals: 0.5–1 mm²
Fixing holes for screws M3
Weight: 3.7 g, unit: 1000 pcs.
Type: 43100
Ref. No.: 101631

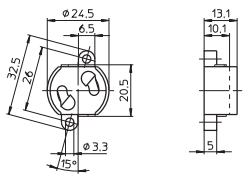



Starter holder
Material: PC, white
T110, nominal rating: 2/250
Push-in terminals: 0.5–1 mm², single-core
Lateral split pins for wall thickness up to 1 mm
Rear of starter holder/luminaire: IP40
Weight: 3.7 g, unit: 1000 pcs.
Type: 43200
Ref. No.: 109790

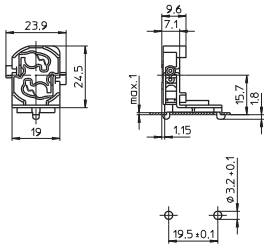



Starter holder
Material: PC, white
T110, nominal rating: 2/250
Push-in terminals: 0.5–1 mm², single-core
Rear split pins for wall thickness up to 1.2 mm
Lateral split pins for wall thickness up to 1 mm
Rear of starter holder/luminaire: IP40
Weight: 3.7 g, unit: 1000 pcs.
Type: 43210
Ref. No.: 109792

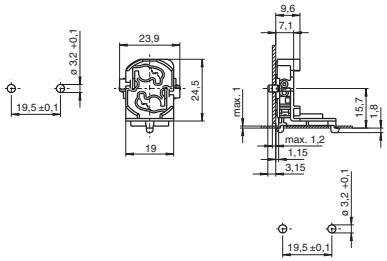



Starter holder with integrated extension piece
Material: PC, white
T110, nominal rating: 2/250
Push-in terminals: 0.5–1 mm²
Front split pins for wall thickness up to 0.8 mm
Weight: 5.4 g, unit: 1000 pcs.
Type: 43300
Ref. No.: 101636

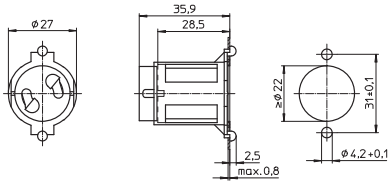



Starter holder with integrated extension piece
Material: PC, white
For the automatic luminaire wiring
T110, nominal rating: 2/250
IDC terminals for leads H05V-U 0.5
Front split pins for wall thickness up to 1 mm
Weight: 5.4 g, unit: 1000 pcs.
Type: 43500
Ref. No.: 108454

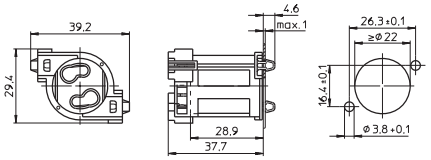

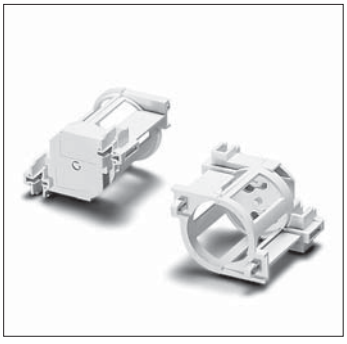

Starter holder
Material: PC, white
For the automatic luminaire wiring
T110, nominal rating: 2/250
IDC terminals for leads H05V-U 0.5
Rear split pins for wall thickness up to 1 mm
Weight: 3.2 g, unit: 1000 pcs.
Type: 43510
Ref. No.: 107723

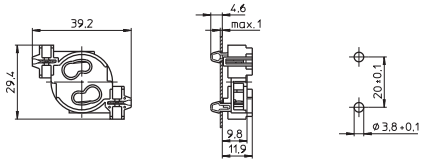



Starter holder
Material: PC, white
T110, nominal rating: 2/250
Push-in terminals: 0.5–1 mm²
For the automatic luminaire wiring:
IDC terminals for leads H05V-U 0.5
Rear split pins for wall thickness up to 1 mm
Weight: 3 g, unit: 1000 pcs.
Type: 43520
Ref. No.: 530079

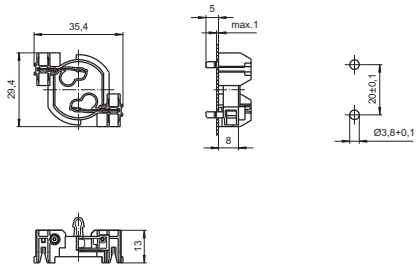



Starter holder
Material: PA, white
T110, nominal rating: 2/250
For the automatic luminaire wiring:
IDC terminals for leads H05V-U 0.5
Lateral split pins for wall thickness up to 1 mm
Weight: 3 g, unit: 1000 pcs.
Type: 43410
Ref. No.: 107445

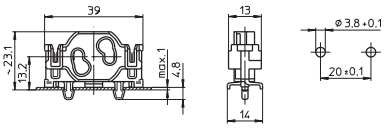



Extension piece
For front clip-in fixing into luminaire metal sheets
For use with starter holder 109784 (see p. 340)
For screw caps type 97065
Material: PC, white
Weight: 3.5 g, unit: 500 pcs.
Type: 97064
Ref. No.: 105482

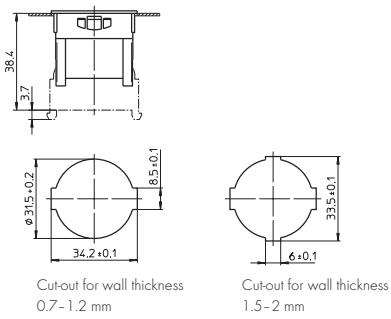

Cut-out for wall thickness
0.7–1.2 mm

Cut-out for wall thickness
1.5–2 mm



Screw caps for degree of protection IP54/IP65/IP67
For extension piece 105482
Material: PP
Gasket: EPDM cellular rubber
Weight: 3.2/4/3.2/0.3 g, unit: 500 pcs.
Type: 97065 screw cap
Ref. No.: 105483 white
Ref. No.: 109575 grey
Ref. No.: 105484 black
Type: 98086 gasket
Ref. No.: 106095

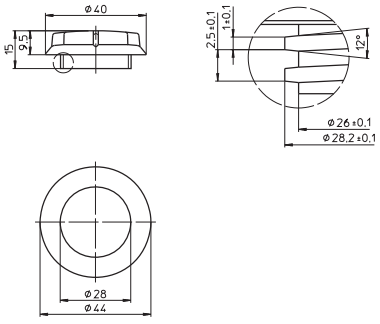



Terminal Blocks, Accessories

Suitable only for solid conductors on the secondary connection

Terminal blocks
Casing: PC, white, T85
Nominal rating: 450 V
Primary connection with release button:
push-in twin terminals 0.5–2.5 mm²/16 A
Secondary connection:
push-in twin terminals 0.5–1.5 mm²/16 A
and 0.5–2.5 mm²/16 A
Connection for X2 RFI-suppression capacitor:
0.5–0.75 mm², capacitor's pins must be
insulated (stripped lead ends: 8^{+1} mm)
For the automatic luminaire wiring:
IDC terminals for leads H05V-U 0.5/6 A
Base split pins for wall thickness 0.6–1 mm

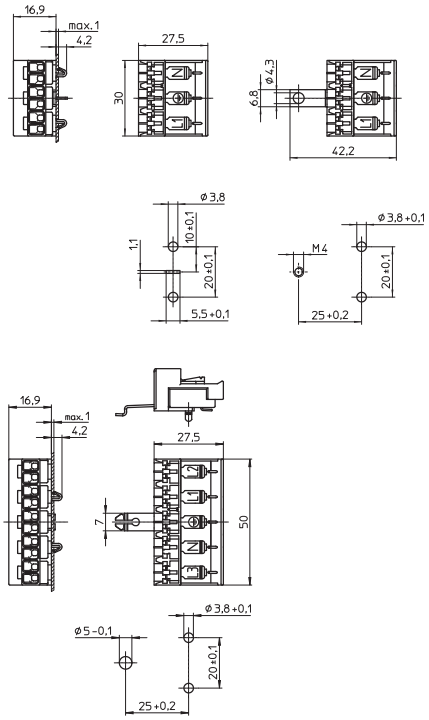

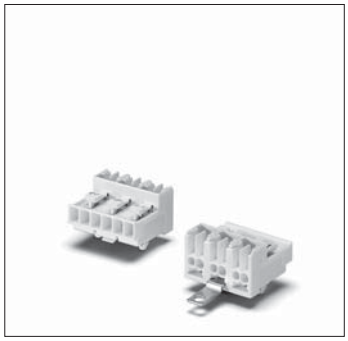

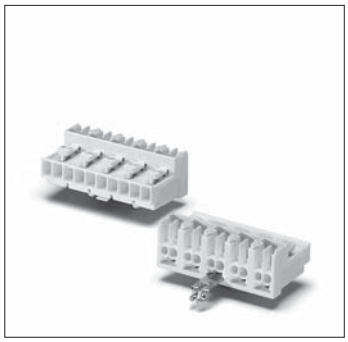

Type	**Ref. No.**	Number of poles	Earth-contact connection	Mark	Weight (g)	Unit (pcs.)
41500	**533312**	3-poles	not earthed	N, L2, L1	9.2	500
41510	**533313**	3-poles	earth spike	N, PE, L1	9.4	500
41520	**533314**	3-poles	earth strap M4	N, PE, L1	10	500
41530	**534948**	3-poles	earth finger	N, PE, L1	10	500
41540	**533315**	5-poles	not earthed	L3, L2, L4, N, L1	15.1	500
41550	**533316**	5-poles	earth spike	L3, L2, PE, N, L1	15.3	500
41560	**533317**	5-poles	earth strap M4	L3, L2, PE, N, L1	16	500
41570	**534954**	5-poles	earth finger	L3, L2, PE, N, L1	16	500

Push-in cord grip
For terminal blocks type 415
For leads with insulation max. Ø 10.5 mm
Conductor fixed with self-tapping screws
acc. to ISO 1481/7049-ST2.9-C/F
Material: PA, white
Weight: 2.2 g, unit: 500 pcs.
Type: 97734
Ref. No.: 535474

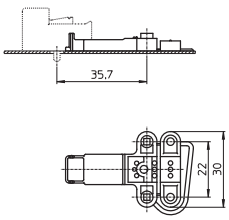



Terminal blocks
Casing: PC, white, T85
Nominal rating: 450 V
Primary connection:
screw terminals 2.5 mm²
Secondary connection:
push-in twin terminals 1.5 mm²
(with IDC contacts: 1 mm²)
push-in terminal 0.5 mm²
For the automatic luminaire wiring:
IDC terminals for leads H05V-U 0.5
Base split pins for wall thickness 0.6–1.2 mm

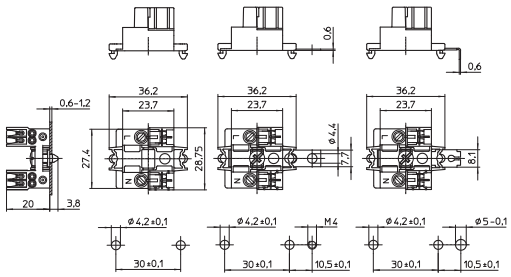

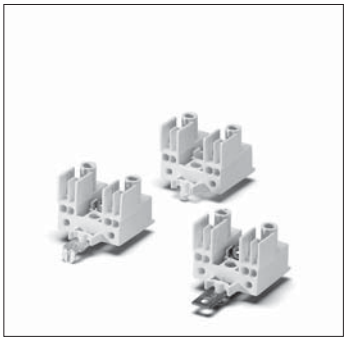

Type	Ref. No.	IDC	Number of poles	Earth-contact connection	Weight (g)	Unit (pcs.)
40660	**543793**	no	3-poles	not earthed	5.7	1000
40662	**543795**	no	3-poles	earth strap M4	8.4	1000
40666	**543800**	no	3-poles	earth finger	8.3	1000
40661	**543794**	yes	3-poles	not earthed	6	1000
40663	**543796**	yes	3-poles	earth strap M4	8.7	1000
40667	**547801**	yes	3-poles	earth finger	8.6	1000

Terminal blocks with fuse holder
Material: PC, white, T70
nominal rating: 250 V
Primary connection: screw terminals 2.5 mm²
Secondary connection:
push-in twin terminals 1.5 mm²
(with IDC contacts: 1 mm²)
push-in terminal 0.5 mm²
For the automatic luminaire wiring:
IDC terminals for leads H05V-U 0.5
With retaining clip for fuses 5×20 mm
With integrated fuse on request
Base split pins for wall thickness 0.6–1.2 mm

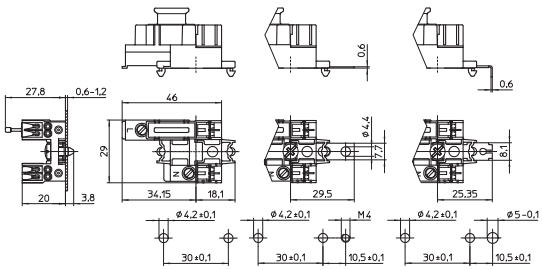

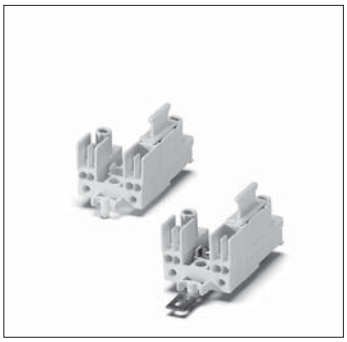

Type	Ref. No.	IDC	Number of poles	Earth-contact connection	Weight (g)	Unit (pcs.)
40670	**543802**	no	3-poles	not earthed	8.7	1000
40672	**543805**	no	3-poles	earth strap M4	11.5	1000
40676	**543809**	no	3-poles	earth finger	14.1	1000
40671	**543803**	yes	3-poles	not earthed	9.0	1000
40673	**543806**	yes	3-poles	earth strap M4	11.8	1000
40677	**543810**	yes	3-poles	earth finger	14.4	1000

Terminal blocks
Material: PC, white, T85, nominal rating: 400 V
Primary connection: screw terminals 2.5 mm²
Secondary connection:
push-in twin terminals 1.5 mm²
push-in terminal 0.5 mm²
Fixing holes for screws M3
Weight: 7.7/10.6 g, unit: 1000 pcs.
Type: 40650/40651
Ref. No.: 533860
Ref. No.: 533861 with earth strap for screw M4

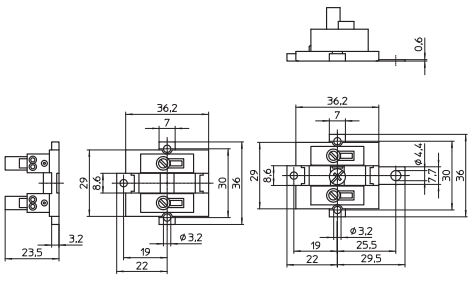

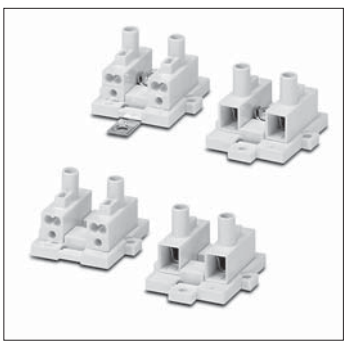

Terminal blocks with fuse holder
Material: PC, white, T70, nominal rating: 250 V
Primary connection: screw terminals 2.5 mm²
Secondary connection:
push-in twin terminals 1.5 mm²
push-in terminal 0.5 mm²
Fixing holes for screws M3
Weight: 11.2/14.1 g, unit: 1000 pcs.
Type: 40655/40656
Ref. No.: 533865
Ref. No.: 533866 with earth strap for screw M4

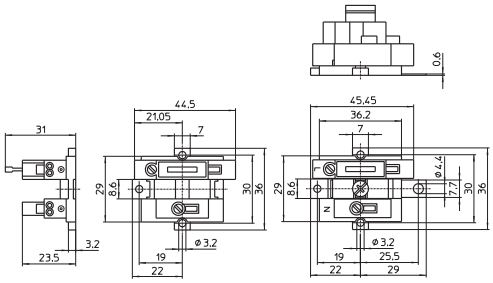

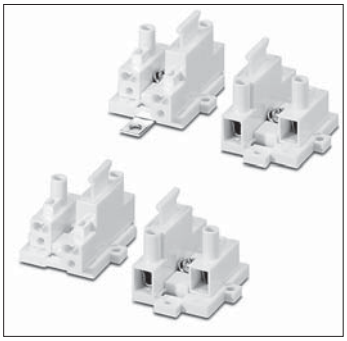

Terminal blocks
Casing: PC, grey, T85
Nominal rating: 450 V
Primary connection:
screw terminals 2.5 mm²
Secondary connection:
push-in twin terminal 1.5 mm²
(with IDC contacts: 1 mm²)
push-in terminal 0.5 mm²
For the automatic luminaire wiring:
IDC terminals for leads H05V-U 0.5
Base split pins for wall thickness 0.6–1.2 mm

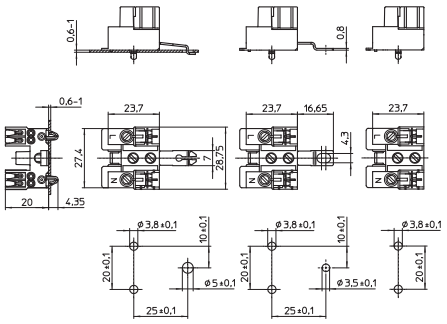



Type	Ref. No.	IDC	Number of poles	Earth-contact connection	Weight (g)	Unit (pcs.)
40560	**543770**	no	3-poles	not earthed	8	1000
40562	**543772**	no	3-poles	earth strap M4	8.7	1000
40566	**543777**	no	3-poles	earth finger	8.8	1000
40561	**543771**	yes	3-poles	not earthed	8.3	1000
40563	**543773**	yes	3-poles	earth strap M4	9	1000
40567	**543778**	yes	3-poles	earth finger	9.1	1000

Terminal blocks with fuse holder
Material: PBT, grey, T70
Nominal rating: 250 V
Primary connection: screw terminals 2.5 mm²
Secondary connection:
push-in twin terminals 1.5 mm²
(with IDC contacts: 1 mm²)
push-in terminal 0.5 mm²
For the automatic luminaire wiring:
IDC terminals for leads H05V-U 0.5
With retaining clip for fuses 6×25 mm
With integrated fuse on request
Base split pins for wall thickness 0.6–1.2 mm

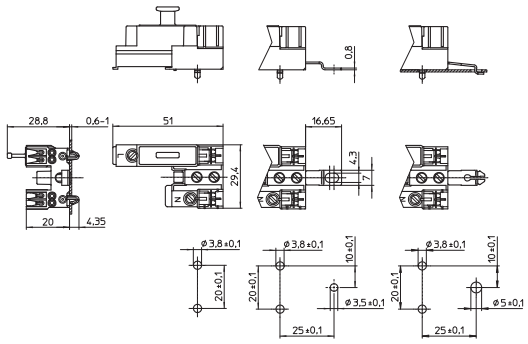

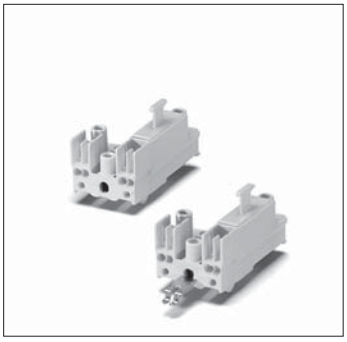

Type	Ref. No.	IDC	Number of poles	Earth-contact connection	Weight (g)	Unit (pcs.)
40570	**543781**	no	3-poles	not earthed	11	500
40572	**543783**	no	3-poles	earth strap M4	11.7	500
40576	**543787**	no	3-poles	earth finger	11.8	500
40571	**543782**	yes	3-poles	not earthed	11.3	500
40573	**543784**	yes	3-poles	earth strap M4	12	500
40577	**543788**	yes	3-poles	earth finger	12.1	500

Terminal blocks (modular system)
Casing: PC, white, T85
Nominal rating: 450 V
Primary connection:
screw terminals 2.5 mm²
Secondary connection:
push-in twin terminals 1 mm²
For the automatic luminaire wiring:
IDC terminals for leads H05V-U 0.5

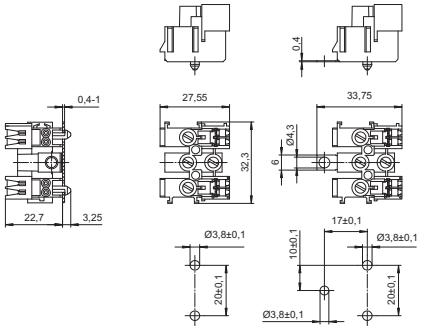



Type	Ref. No.	Number of poles	With earth strap	Weight (g)	Unit (pcs.)
40505	**526709**	1-pole	no	3.4	2000
40520	**526711**	4-poles	no	14.6	500
40521	**526712**	4-poles	yes	14.9	500

If required, the number of available lines (i.e. poles) can be extended by simply linking up the requisite number of luminaire terminal blocks.

Terminal blocks (modular system)
Casing: PBT, white, T70
Nominal rating: 250 V
Primary connection:
screw terminals 2.5 mm²
Secondary connection:
push-in twin terminals 1 mm²
For the automatic luminaire wiring:
IDC terminals for leads H05V-U 0.5
With retaining clip for fuses 6x25 mm
With integrated fuse on request

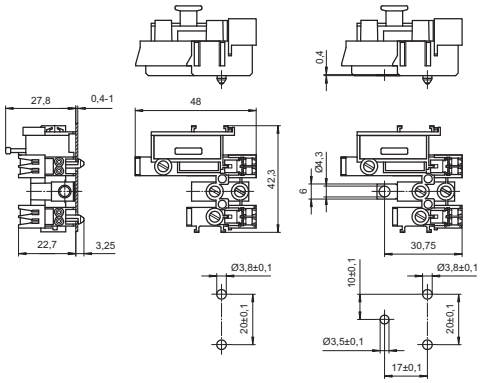

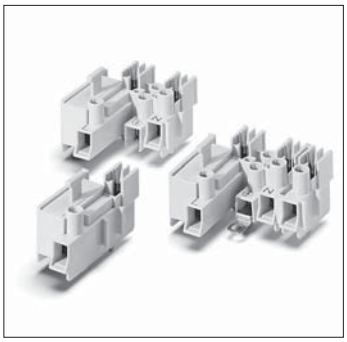

Type	Ref. No.	Number of poles	With earth strap	Weight (g)	Unit (pcs.)
40506	**526710**	1-pole	no	9	1000
40530	**526713**	4-poles	no	22.3	500
40531	**526714**	4-poles	yes	22.6	500

If required, the number of available lines (i.e. poles) can be extended by simply linking up the requisite number of luminaire terminal blocks.

Terminal blocks
Casing: PC, white, T95
Nominal rating: 16/250
Primary and secondary connection
with release button:
push-in twin terminals 0.5–2.5 mm²
push-in terminals 0.5–0.75 mm²
Fixing holes for screws M3
Base split pins

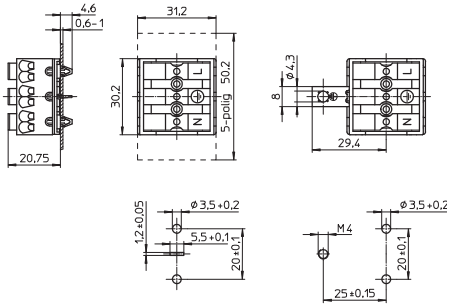

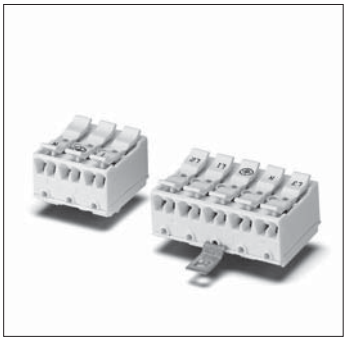

Type	Ref. No.	Number of poles	Earth-contact connection	Mark	Weight (g)	Unit (pcs.)
40710	**509534**	3-poles	earth spike	N PE L	13.2	500
40711	**530829**	3-poles	with earth strap M4	N PE L	14.8	500
40712	**529596**	3-poles	not earthed	N PE L	13	500
40730	**509535**	5-poles	earth spike	L3 N PE L1 L2	17.4	500
40731	**530831**	5-poles	with earth strap M4	L3 N PE L1 L2	19	500

Push-in cord grip
For terminal blocks type 407
For leads with insulation Ø 9.5–12.5 mm
Conductor fixed with screws
Material: PC, white
Weight: 6.2 g, unit: 500 pcs.
Type: 80016
Ref. No.: 525893

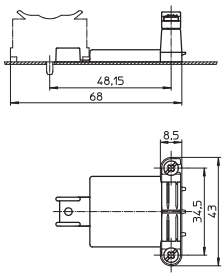



Terminal blocks
Casing: PA, white
Primary and secondary connection:
screw terminals

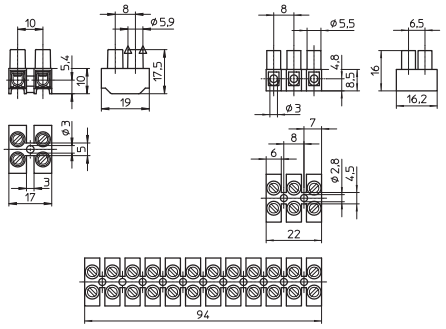



Type	Ref. No.	Number of poles	Nominal rating	Cconnection primary/secondary	T-Marking	Weight g	Unit pcs.
41600	**537484**	2-poles	24 A / 450 V	0.5–2.5 mm²	T85	5.2	2000
41600	**544000**	2-poles	24 A / 450 V	0.5–2.5 mm²	T180	5.6	2000
41663	**542503**	3-poles	24 A / 450 V	0.5–2.5 mm²	T110	5.3	2000
41672	**544011**	12-poles	24 A / 450 V	0.5–2.5 mm²	T110	21.3	2000

Built-in Rocker Switches

Built-in rocker switch 1-pole
For cut-out 16x26 mm
Casing: PC, white, T100
Contact pillar and rocker: PBT, white
Terminal: nichrome steel
Nominal rating: 6(2)/250~
Push-in terminals: 0.5–1 mm²
Lateral fixing clips for wall thickness 0.6–1 mm
Weight: 7.2 g, unit: 500 pcs.
Type: 20200
Ref. No.: 100437

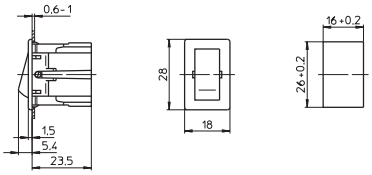



4 Components for Fluorescent Lamps

Electronic ballasts **351–352**
Assembly instructions for mounting and installing – Electronic ballasts 352–359
DALI system information 359–361
Circuit diagrams – Electronic ballasts 362–365

Electromagnetic ballasts **366**
Assembly instructions for mounting and installing – Electromagnetic ballasts 367–370
Circuit diagrams – Electromagnetic ballasts 370

Connection terminals **371**

Lampholders for fluorescent lamps **372**

Lamp table **373–375**

Energy efficiency classification **376–378**

Key to lamp designations **379**

General technical details **533–540**
Glossary 541–543

Ballasts for fluorescent lamps

The operation of a fluorescent lamp depends on a ballast that stabilises the lamp's preheat current after connection to the mains and, in conjunction with the starter, also supplies the required lamp ignition voltage after preheating. After ignition, the ballast then serves to limit the lamp current. As fluorescent lamps are characterised by a negative characteristic current-voltage curve, lamp current stabilisation is essential with regard to both the lamp's stable operation and a long service life, which is also dependent on compliance with the starting conditions (preheat current and ignition voltage). Unfavourable starting conditions cause damage to the electrodes every time the lamp is started and thus reduce the lamp's service life. Furthermore, care should be taken to prevent crossdischarge in the electrode area during preheating, which also shortens lamp service life.

Electromagnetic (inductive) ballasts have to be operated in conjunction with starters for lamp ignition and capacitors for blind current compensation. In addition, capacitors for RFI suppression will also be required for certain circuits. Electronic ballasts do not require any additional components.

Electronic ballasts (EB)

VS electronic ballasts are designed for mains voltages of 220 V to 240 V (exceptions are devices for the North American market where the nominal mains voltage is 127 V or 277 V) and are used to operate fluorescent lamps at high frequencies. The lamps are ignited with an internally generated ignition voltage, thereby removing the need for an external starter. The power factor (λ) > 0.95 also removes the need for compensation, unlike with electromagnetic ballasts. The only exceptions are low-output ELXs models, which attain a power factor of 0.6. Luminaires fitted with electronic ballasts are characterised by low energy consumption as they draw substantially less system power than conventional, inductive applications. This is firstly because the lamp consumes less power to achieve the same luminous flux and secondly because the internal loss of an electronic ballast only amounts to approx. 8% to 10% of the lamp's output. Furthermore, thanks to their modern circuitry, the power input of VS electronic ballasts remains constant even in the event of mains voltage fluctuations, thus ensuring permanently low energy consumption.

VS electronic ballasts permit a broad range of applications. For instance, the VS product range includes many ballast types for multiple lamp operation. These ballasts reduce installation and component costs and thus enable particularly efficient luminaires. Twin-lamp electronic ballasts permit so-called master-slave operation. The lamps of two single-lamp luminaires are operated by a twin-lamp electronic ballast that is built into the so-called master luminaire. The lamp of the slave luminaire is electrically connected to the electronic ballast.

Multi-lamp electronic ballasts also provide an interesting advantage in that several lamps of different ratings can be connected. Electronic ballasts of this kind simplify storage and logistics.

The use of electronic ballasts makes a lighting system both more convenient and efficient to operate:

- reduced power consumption (up to 30%) at undiminished light output
- 50% longer service life
- stabilised lamp output
- overvoltage protection
- no stroboscopic effect
- flicker-free lamp start
- no need for a starter or capacitor
- low wiring effort
- no radiated electromagnetic interference
- low self-heating due to minimal power loss
- automatic shutdown of defective lamps
- automatic restart once the lamp has been changed (except ELXe series)

Vossloh-Schwabe electronic ballasts are developed on the basis of the latest technological and component standards and are produced using state-of-the-art technology, whereby consideration is taken of our customers' quality standards in our quality assurance system.

Assembly Instructions for Electronic Ballasts

For mounting and installing of electronic ballasts for fluorescent lamps

Mandatory regulations

EN 61347-1	Lamp controlgear – part 1: general and safety requirements
EN 61347-2-3	Lamp controlgear – part 2-3: particular requirements for a.c. supplied electronic ballasts for fluorescent lamps
EN 60929	AC-supplied electronic ballasts for tubular fluorescent lamps
DIN VDE 0100	Erection of low voltage installations
EN 60598-1	Luminaires – part 1: general requirements and tests
EN 61000-3-2	Electromagnetic compatibility (EMC) – part 3: maximum values – main section part 2: maximum values for mains harmonics (device input current up to and including 16 A per conductor)
EN 55015	Maximum values and methods of measurement for RFI suppression in electrical lighting installations and similar electrical appliances
EN 61547	Installations for general lighting purposes – EMC immunity requirements

Descriptions of VS electronic ballasts (EBs)

ELXs ballasts
The family of ELXs ballasts forms a perfect alternative to magnetic ballasts. ELXs ballasts have the same fixing hole centres as standard electromagnetic ballasts. The lamp is ignited after a preheating time (warm start) of 1.5 seconds. These ballasts are dimensioned to take system outputs (lamp output plus power loss of the electronic ballast) of up to 25 W. The power factor of these ballasts amounts to approx. 0.6. The average service life of these ballasts totals 30,000 hours with a failure rate of ≤ 0.2% per 1,000 operating hours.

ELXe ballasts (instant start)
With this ballast family, the lamps ignite immediately after connection to the mains by applying an ignition voltage of max. 1,500 V to the gas discharge path of the lamp. The ignition time totals approx. 0.5 seconds. As this puts a severe strain on the electrodes, the realistic number of lamp starts is limited to max. 10,000 ignitions up to the end of the lamp's service life. For that reason, ELXe ballasts should only be used for applications demanding fewer than five lamp ignitions per day (e.g. in production sites, warehouses or department stores). The power factor of this device is approx. 0.98. As there is no need for preheating, ELXe ballasts usually require one connection per electrode for lamp operation. This makes them suitable for use in explosion protected luminaires. In addition, they are very energy-efficient as there are no lamp electrode losses. The average service life of these ballasts totals 50,000 hours with a failure rate of ≤ 0.2% per 1,000 operating hours.

ELXc ballasts (warm start)
In contrast to the ELXs series, ELXc ballasts have a power factor of better than 0.95 and cover the complete capacity range.
ELXc ballasts ensure the lamp is started following a defined lamp electrode preheating period of approx. 1–2.5 seconds using a fixed ignition voltage. This particularly gentle lamp start makes over 20,000 lamp starts possible. ELXc ballasts should be used for applications with high switching frequencies (e.g. hotels or offices) where energy savings as well as low maintenance costs are desired. The average service life of these ballasts totals 50,000 hours (for EffectLine ballasts of first generation: 40,000 hrs.) with a failure rate of ≤ 0.2% per 1,000 operating hours.

ELXd ballasts (dimmable)
These are warm start ballasts with an additional dimming function that is controlled via an interface fitted to the ballast. The interface of these ballasts can be either analogue (1–10 Volt) or digital (DALI; PUSH); the interface enables lighting to be ideally adjusted to suit the given need. Control components can also be used as long as they comply with the respective standard (Annex to IEC/EN 60929). The power factor for these ballasts is > 0.95 at 100% lamp operation. When using ELXd ballasts in a lighting system, an energy saving of 75% can be achieved if, for instance, the control inputs of the ballasts are coupled with movement detectors and light sensors. The average service life of these ballasts totals 50,000 hours with a failure rate of ≤ 0.2% per 1,000 operating hours.

To guarantee trouble-free operation and a long service life of the various types of electronic ballast, attention should be paid to the regulations and mounting instructions (page 354–359). In addition, the installation instructions for lighting systems must be observed when installing luminaires with electronic ballasts.

Mounting and installation instructions can be obtained from Vossloh-Schwabe on request or can be found online at **www.vossloh-schwabe.com**.

Mechanical mounting

Surface	Solid, flat surface for good heat dissipation required. Avoid mounting on protruding surfaces.
Mounting location	Electronic ballasts must be protected against moisture and heat. Installation in external luminaires: water protection rate of ≥ 4 (e.g. IP54 required)
Fastening	With M4 screws in the designated holes
Heat transfer	If the ballast is destined for installation in a luminaire, sufficient heat transfer must be ensured between the ballast and the luminaire casing. Electronic ballasts should be mounted with the greatest possible clearance to heat sources or lamps. During operation, the temperature measured at the t_c point of the ballast must not exceed the specified maximum value.

Supplement for independent electronic ballasts

Mounting position	Any
Clearance	Min. of 0.10 m from walls, ceilings, insulation Min. of 0.10 m from other electronic ballasts Min. of 0.25 m from sources of heat (lamp)
Surface	Solid; device must not be allowed to sink into insulation materials

Technical specifications

Operating voltage range	AC: 220 to 240 V (±10%) DC: please observe the specifications on the individual product pages
Ignition time	ELXe ballasts t < 0.5 seconds (instant start)
Preheat time	ELXc, ELXs and ELXd ballasts t = 0.5 or 1.5 to 2.5 seconds (warm start)
Leak current	≤ 0.5 mA per electronic ballast

Product features

Overheating	VS EBs for fluorescent lamps are not protected against overheating
Overvoltage protection	**AC**: up to 48 hours at U_{NAC} = 320 V and up to 2 hours at U_{NAC} = 350 V **DC**: no disorders occur with input voltages of up to U_{NDC} 285 V. U_{NDC} voltages in excess of 288 V destroy the ballast.
Shutdown of defective lamps	During starting operation, the electronic ballast will detect whether a lamp is connected. If no lamp is present, the ballast will cancel the starting operation. Deactivated lamps or interrupted electrodes are detected and lead to the high-frequency supply being switched off after an unsuccessful ignition attempt. Changing a lamp during operation will lead to the high-frequency supply being switched off.

EOL effect

Up to now, it has not been possible to conclusively reproduce the end-of-life effect under laboratory conditions. However, it can be qualitatively described for fluorescent lamps as follows: when the emitter material of the cathode (i.e. the filament in conventional bi-pin lamps) has been fully consumed or has otherwise lost its emitting power, the emission of electrons is hampered, which leads to a voltage drop at the cathode. Frequent cold starts accelerate active emitter loss.

Operating a lamp with a constant current (an electronic ballasts (EB) provides a near-constant current) results in high dissipation losses that also cause the lamp base and lampholder to heat up and can even cause damage to both. This is often referred to as the EOL effect; from an electrical point of view, this is manifested in the so-called "partial rectifier effect".

The EOL cut-out ensures that a ballast is safely switched off and the lamp base does not overheat at the end of a lamp's service life.

EN 61347-2-3 (A1:2004) describes three possible tests.
The first are now in widespread use and are described in more detail here.
The third test is not conducted at VS.

1. EOL Test 1 (61347-2-3:2000 + A1:2004 + A2:2006 17.2)
   Asymmetric pulse test
2. EOL Test 2 (61347-2-3:2000 + A1:2004 + A2:2006 17.3)
   Asymmetric power test
3. EOL Test 3 (61347-2-3:2000 + A1:2004 + A2:2006 17.4)
   Exposed filament test

The first two tests attempt to simulate the rectifier effect:

- Test 1 pulse switching of rectifing effect
- Test 2 by applying a DC voltage that is constantly higher than required by the lamp.

VS EBs are capable of suitably assessing the altered voltage signal in comparison to normal operation so as to meet EOL requirements.

Protection against transient mains peaks

Values are in compliance with EN 61547 (interference immunity)
(1 kV for AC and 0.5 kV for DC and control conductors).

Electrical installation

Wiring

The wiring between the mains, electronic ballast and lamp must comply with the respective circuit diagram. Note: with ELXe models, one side of the lamp electrode is never connected to the electronic ballast.
The electronic ballast must be earthed using a toothed washer or similar (protection class I, ignition help, compliance with RFI/BCI standards).
To ensure compliance with RFI-suppression limits, mains conductors should not be wired in parallel to high-frequency carrying lamp conductors; maximum clearance should be ensured and all conductors marked with an * must be kept short. As a general rule, a maximum conductor length should not be exceeded when using conventional conductors (see table on page 363–365 for precise details). Luminaire must be tested for compliance with the RFI suppression limits stipulated by EN 55015.

Conductors must not exceed 3 m in length in the event of master-slave operation.

Dimmable electronic ballasts are unsuitable for master/slave operation.

Through-wiring of mains voltage

ELXc 257.836 (188400) devices permit through-wiring of mains voltage
The following list specifies the maximum No. of devices that may be connected to the first device:

- 2 x 57 W = max. 3 devices
- 2 x 42 W = max. 4 devices
- 2 x 32 W = max. 5 devices
- 2 x 26 W = max. 7 devices

Mains power can be through-wired with the following devices:

- ELXc 213.874: max. 39 devices
- ELXc 218.875: max. 31 devices
- ELXc 142.876: max. 23 devices
- ELXc 242.877: max. 11 devices

The number of devices always refers to maximum-load operation. In addition, the maximum number of devices per installed automatic fuse must be strictly observed.

It is permissible to connect the protective conductor of the ballast by attaching the ballast to metal conductors that are connected to the protective conductor. In doing so, care must be taken to ensure the protective conductor is contacted in accordance with EN 60598. If, however, a ballast is fitted with a connection terminal for a protective conductor without through-wiring and if this is to be used to connect the protective conductor, this connection terminal may only be used for the ballast itself.

Cord grip

EBs with cord grip can be used with the following conductors, for instance:

Designation	**Lead type**
Mains lead	H03VV-F 3X0.75 mm² or NYM 3X1.5 mm²
Control lead	H03VV-F 2X0.5 mm²
Mains and control lead in one lead	H03VV-F 5X0.75 mm²
Lamp lead	H05VV-F 4X1 mm² or 5X1 mm²

Connection terminals for automatic luminaire wiring (ALF connections)

- Use copper (not stranded) wire
- Rquired diameter for push-in connection 0.5–1 mm²
- Stripped lead length 8–9 mm
- Required diameter for IDC 0.5 mm², max. Ø 2 mm including insulation, no wire stripping required; mounting requires a special tool

Push-in terminals

The integrated terminals can be used with flexible or rigid leads with a crosssection of 0.5–1.5 mm². The stripped lead length ranges between 8.5–9.5 mm for a 3.5 mm terminal grid.

Error current

Impulse-resistant leak-current protection must be installed. Distribute the luminaires to phases L1, L2 and L3; install tri-phase FI switches. If permissible, install FI switches with 30 mA leak current; connect no more than 15 luminaires as FI switches can be triggered at half the leak current value.

Tri-phase connection of luminaires with EB

- Prior to operating newly installed lighting systems: check the mains voltage is appropriate to the electronic ballast's mains voltage range (AC, DC).
- The N-type conductor must be properly connected to all luminaires or ballasts.
- Conductors can only be connected or disconnected if the ballast is disconnected from the mains. Attention: N-type conductors must never be disconnected individually or as the first element.
- Insulation resistance test: from L to PE (L and N must not be connected)
- The neutral conductor must be reconnected after completion of the test.

Power factor/compensation

Luminaires with electronic ballasts do not require compensation:
power factor ≥ 0.95 (ELXc 113.392: power factor ≥ 0.9).
For ELXc ballast models 116.900, 116.903, 117.908, 121.901, 121.904, 124.902, 124.905, 126.906 and 126.907: power factor ≥ 0.6.

Selection of automatic cut-outs

Dimensioning automatic cut-outs

High transient currents occur when an EB is switched on because the capacitors have to load. Lamp ignition occurs almost simultaneously. This also causes a simultaneous high demand for power. These high currents when the system is switched on put a strain on the automatic conductor cut-outs, which must be selected and dimensioned to suit.

Release reaction The release reaction of the automatic conductor cut-outs comply with VDE 0641, part 11, for B and C characteristics.

No. of electronic ballasts (see the table on pages 363–365)

The maximum number of VS ballasts applies to cases where the devices are switched on simultaneously. Specifications apply to single-pole fuses. The number of permissible ballasts must be reduced by 20% for multi-pole fuses. The considered circuit impedance equals 400 mΩ (approx. 20 m of conductor [2.5 m²] from the power supply to the distributor and a further 15 m to the luminaire). Doubling circuit impedance to 800 mΩ increases the possible number of ballasts by 10%.

EB output voltage Electronic ballasts bear the information "U_{OUT}" on their type plates. All subsequently connected components must be designed for this EB output voltage. When using T5 lamps, any components connected to the output side of the EB must be approved for a voltage of ≥ 430 V (especially lampholders). This also applies to dimmable T5 EBs.

Lamps and dimmed operation

For lighting systems with dimmable electronic ballasts, Vossloh-Schwabe recommends that fluorescent lamps always be replaced as a full complement to maintain uniform lighting levels and colour impressions. New lamps must be burnt in at maximum brightness for approx. 100 hours.
Without restrictions, VS electronic ballasts can be used to operate ECO T5 fluorsecent lamps (except for with types ELXc 135.856 and ELXc 235.857) and T8 fluorescent lamps. A two-lamp dimmable electronic ballast can only be used with lamps of a single lamp manufacturer. The following EBs are restricted in their suitability for dimmer operation of amalgam lamps: ELXd 118.802, 218.803, 142.806, 242.807.

Dimming interface

DC 1–10 V according to EN 60929 with power source 0.5 mA (protected in the event of mains voltage connection); designed to enable connection of control and regulation units.
Dimming range: 3–100% of lamp power

DALI (Digital Addressable Lighting Interface) dimming interface

Polarity reversible dimmer interface – protected in accordance with EN 60929 given mains voltage supply – for connecting control devices that work according to the standard digital protocol. Dimming range: 1–100% of the lamp's rating

Potential interference with IR systems

Operating lamps at frequencies of 20 to 50 kHz can cause interference with infrare systems (remote controls, sound transmission, personal pager systems). Countermeasures: optical filters, switching to infrared systems with higher carrier frequencies (over 400 kHz).

Electromagnetic Compatibility (EMC)

Vossloh-Schwabe's electronic ballast range was developed in accordance with valid EMC standards (interference, interference immunity and mains harmonics) and specially designed to ensure safe compliance with the limiting values.
It is assumed that that any remarks regarding conductor wiring and conductor length in the instructions for installing electronic ballasts in luminaires or for independent ballasts will be observed.

Vossloh-Schwabe electronic ballasts are also tested in commercially available luminaires in addition to the CISPR 30 sample luminaires.

- ELXs devices: The ELXs device family was developed for system ratings of ≤ 25 W on the basis of the limiting values prescribed for this in EN 61000-3-2. Vossloh-Schwabe's ELXs devices all bear the VDE EMC mark and comply with the limiting values laid down by EN 61000-3-2.
  It is possible to use several ELXs ballasts in a luminaire if a separate connection terminal is available for each lamp circuit.

Mains harmonics: the maximum values laid down in EN 61547 (Interference Immunity) are satisfied.

Additional information

Information on the installation of electronic ballasts for optimising EMC

To ensure good radio interference suppression and the greatest possible operating safety, the following points should be observed when installing electronic ballasts:

- Conductors between the EB and the lamp (HF conductors) must be kept short (reduction of electromagnetic interference). High-potential lamp conductors must be kept as short as possible, in particular with tubular lamps. Lamp conductors of this kind are labelled with an * in the wiring diagram on the type plate (see page 363–365).
- Mains and lamp conductors must be kept separate and if possible should not be laid in parallel to one another. The distance between HF and mains conductors should be as large as possible, ideally > 5 cm. (This prevents the induction of interference between the mains and lamp conductors.)
- The mains conductor within the luminaire must be kept short (to reduce the induction of interference).
- Devices must be properly earthed. EBs require secure contacts to the luminaire casing or must be earthed using a PE connection. This PE connection should be effected using an independent conductor to achieve better dissipation of the leak current. EMC improves at frequencies greater than 30 MHz.
- The mains conductor must not be laid too close to the EB or the lamp (this is especially important in the event of through-wiring).
- Mains and lamp conductors must not be crossed. Should this be impossible to avoid, conductors should be crossed at right angles to one another to avoid inducing interference between mains and HF conductors.
- Should conductors be wired through metal parts, such conductors must always be additionally shielded (e.g. with an insulating sleeve or grommet).

Temperature

Reference point temperature t_c

The safe operation of electronic ballasts is dependent on the maximum permissible temperature not being exceeded at the measuring point. Vossloh-Schwabe has determined a casing temperature measuring point – $t_{c\ max.}$ – on all EB casings. To avoid shortening the service life or diminishing operating safety, the stipulated maximum temperature must not be exceeded at this t_c point. This point is determined by testing the convertor during normal, IEC-standardised operation at the specified ambient temperature (t_a), which is also indicated on the type plate. As both the design-related ambient temperature and the ballast's inherent heat, as determined by the installed load, are subject to great variation, the casing temperature should be tested at the t_c point under real installation conditions.

Ambient temperature t_a

The ambient temperature – as specified on every EB – denotes the permissible temperature range within the luminaire.

Reliability and service life

If the max. temperature at the t_c reference point (as specified on the type plate and the technical documentation of the ballast) is not exceeded, the defined service life can be expected to be achieved, assuming a switching cycle of 165 minutes on and 15 minutes off.
See page 353 for service life details regarding the various electronic ballast families.

Emergency lighting

All Vossloh-Schwabe EBs that are suitable for DC voltage operation can be used in emergency lighting systems. Consideration must, however, be taken of system requirements.

VS Dimmable Electronic Ballasts

Vossloh-Schwabe's range of electronic ballasts is rounded off by dimmable ballasts for fluorescent lamps The standardised interfaces "1–10 V" and "DALI" are used for this purpose. Coupled with sensors, electronic ballasts fitted with a "1–10 V" interface make it easy to create intelligent luminaires and room lighting systems, whereby the luminaires are "programmed" via the wiring to the control units, i.e. via the hardware.

The digital interface "DALI" (Digital Addressable Lighting Interface) constitutes a further development of the "1–10 V" analogue interface. This digital interface was jointly developed by leading manufacturers of electronic ballasts in order to create a uniform standard for the lighting industry. The uniform interface and telegram definition dictates the function of a DALI operating device or DALI consumer and ensures exchangeability of operating devices made by various manufacturers.

Each VS DALI ballast is additionally fitted with the so-called PUSH function. The data input DA (DALI & PUSH) is used as a control input for both signal structures, with the exception of devices featuring separate inputs. When used as a DALI ballast, control is effected via the DALI protocol; when used as a PUSH ballast, control is effected via a push key and is achieved via current flow times of differing duration.

Due to the working principle involved, dimming compact fluorescent lamps causes a negligible drop in colour temperature. However, sudden larger changes in the dimmer setting can temporarily cause greater variation in colour temperature. The dimmer function is optimised to minimise this subjective visual change in colour temperature when the dimmer setting is suddenly subjected to larger change.

VS DALI electronic ballasts are characterised by the following performance feature

- Two-strand, potential-free, polarity-independent control input
- Dimmer curve analogue to the light sensitivity of the human eye
- Addressing options: total system, group-wise or individually
- Scene memory
- Feedback in the event of defective lamps

These features ensure a number of advantages for lighting systems

- No group wiring needed
- Each DALI ballast can be individually addressed
- No need for scene memory modules
- Synchronised scene transitions
- Operating devices provide reports on lamp status
- Simple integration into facility management systems

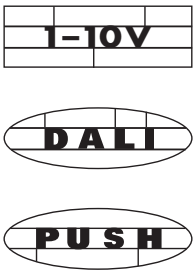

VS DALI electronic ballasts provide the convenience of a bus system that is both easy to install and operate.

DALI and PUSH must not be used at the same time!

Switching mains voltage to the DALI conductors within a DALI system will lead to the destruction of both the DALI power supply and the DALI master!

PUSH function characteristic

- Just one key for dimming and ON/OFF
- Polarity- and phase-independent control
- Control input with large working voltage range
- Suitable for multi-layer control
- Fully DC-compatible – no functional restrictions during DC operation
- After disconnection from the primary voltage the ballast will reproduce the last stored lighting level
- Soft start
- Automatic recognition of DALI and PUSH signals

PUSH operating voltage ranges during control signal input

EB type	ELXd 117.715, ELXd 217.717, ELXd 118.705, ELXd 218.707, ELXd 142.709, ELXd 242.711	All other DALI/PUSH ballasts
AC	220–240 V ±10%	10–230 V
DC	198–264 V	–
	Failing to observe these working voltage ranges can lead to non-recognition of the signals; exceeding the maximum voltages can lead to the destruction of the data inputs.	

PUSH control signals (key activation)

Short push	(80 ms < t < 460 ms)	(0 ms < t < 500 ms)
	Is used to switch between ON/OFF lighting states. After the device is switched on, the last selected lighting level is restored and the next dimming direction will be upwards.	
Long push	(460 ms < t < 10 s)	(500 ms < t < ∞)
	Is used to dim upwards or downwards; a long push will change the dimming direction. Thus, a long push will reverse the dimming direction until the upper or lower limit is reached. If the light was off, a long push will switch iit on and the dimmer will start at the lowest light intensity.	
Push to synchronise	(t > 10 s)	long – short – long
	Light is dimmed to the preset factory level and the next dimming direction will be upwards.	Starting situation: luminaires are switched off. The "long – short – long" combination first switches the lamp on, then off and finally on again, after which it gets gradually brighter. The EBs will be synchronised again after this procedure.
Synchronisation	Any 1-key dimmer that does not feature a central control module (as each ballast will have its own controls) can develop asynchronous behaviour (e.g. children might play with the key). The system will then be out of sync, i.e. some lamps will be on, others off or the dimming direction will differ from lamp to lamp.	
	Two methods of synchronisation can be used: • Push the key for more than 10 seconds, after which the light will be dimmed to a preset level and the next dimming direction will be upwards. • Start with a long push of the key so that all lamps are switched on. Follow with a short push to turn the system off. The system will now be resynchronised.	

Wiring examples for PUSH function

Note **Not permissible**: N-type conductors must not be used as PUSH potentials for multi-phase systems. Example: if the PUSH key is not activated, the series connection of the internal resistors of the DA inputs will approach the delta voltage of 400 V (voltage between L2 and L3) (Fig. 1).

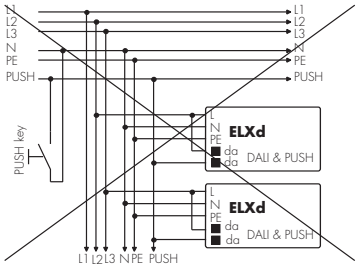

Fig. 1
N conductor must not be used as a PUSH potential

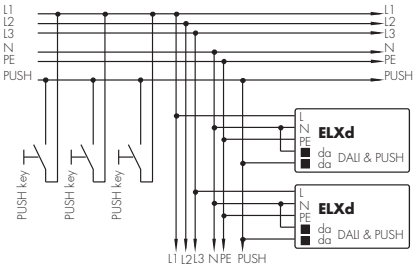

Fig. 2
Standard application for T5 and T8 lamps

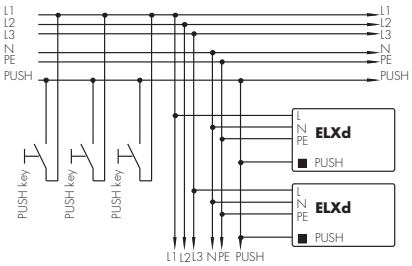

Fig. 3
Standard application for TC lamps

General information on PUSH and DALI

Mains voltage and interface conductors must not be wired in parallel to the lamp conductors so as to avoid capacitive bridging of the mains filter.

If more than one device is operated with a single key during PUSH operation, asynchronous behaviour can occur, which will require manual resynchronisation using the method described. Should this be unacceptable, a DALI control module will have to be used instead. It is recommended not to control more than four devices using a single key.

When using dimmable devices, new lamps should generally be burnt in for at least 100 hours at full brightness before they are dimmed. This process can become necessary again should the lamps be physically relocated 0(e.g. transport).

After initial operation of a DALI system (address assignment, luminaire allocation, group formation, scene settings) it is recommended to disconnect the primary voltage of the DALI control units at the circuit breaker for at least 3 seconds and then to reconnect it. The devices will detect this disconnection from the mains and store the settings.

DALI devices with a PUSH function must be operated with a control module (DALI control module or key pad with PUSH function). DALI devices with a PUSH function must not be operated with an open or bridged DALI/PUSH input.

To ensure the ballast does not distort and misinterpret signals when operated in PUSH mode, connected PUSH buttons must not feature a control lamp.

Circuit diagrams for Vossloh-Schwabe electronic ballasts

The circuit diagrams shown here are wiring examples for Vossloh-Schwabe electronic ballasts, whereby the number and configuration of the contacts differ. See the table on page 363–365 for details.

EB	1 lamp	2 lamps	3 lamps	4 lamps
ELXd	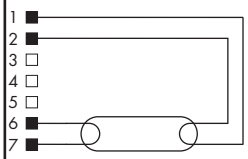	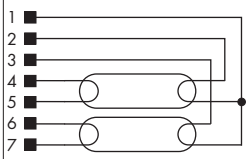 Linear ballast shape*	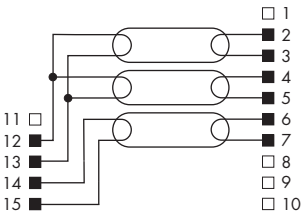	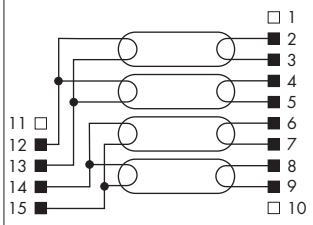
	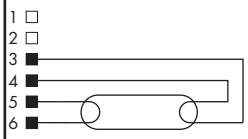	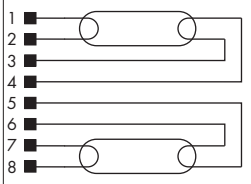		
	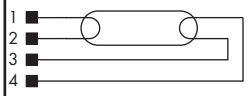	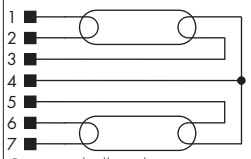 Compact ballast shape		
ELXc	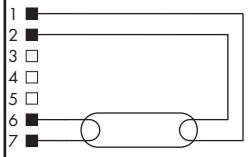	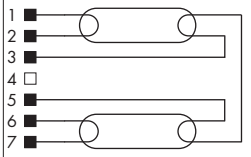	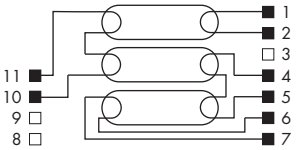	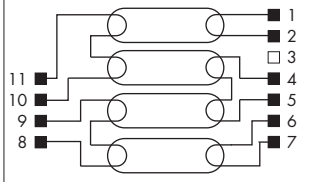
	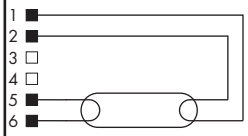	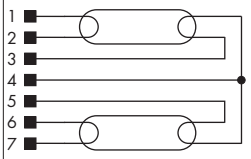	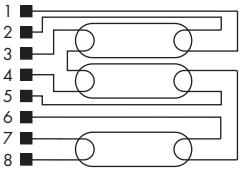	
	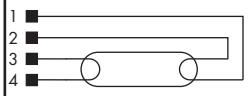	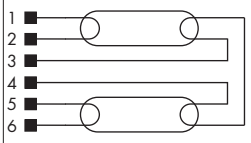		
ELXe	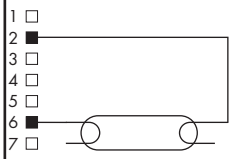	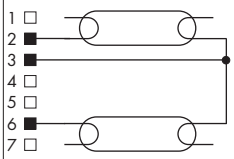		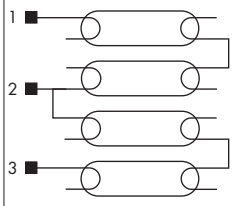
ELXs	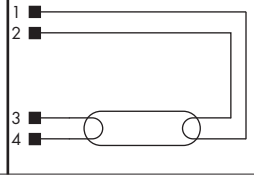			

* ELXc devices can also be wired under observation of the circuit diagram on the ballast.

Explanation of circuit diagrams for Vossloh-Schwabe electronic ballasts (see page 362)

Electronic ballasts		Lamp	Electronic ballasts															Max. lead length		Operation	Output	THD	Possible quantity of EB/automatic cut-outs			
Ref. No.	Type	Quantity	Terminals															hot*	cold	frequency	voltage		B	B	C	C
			1	2	3	4	5	6	7	8	9	10	11	12	13	14	15				U_{OUT}					
																		(m/pf)	(m/pf)	kHz	V	%	(10A)	(16A)	(10A)	(16A)
ELXc																										
183039	ELXc 424.223	3	x*	x*	–	x	x	x	x	–	–	x	x	–	–	–	–	1/100	2/200	46	360	< 10	7	12	12	20
		4	x*	x*	–	x	x	x	x	x	x	x	x	–	–	–	–	1/100	2/200	46	360	< 10	7	12	12	20
183040	ELXc 226.878	1	x	x	–	–	x*	x*	–	–	–	–	–	–	–	–	–	1/100	1.5/150	45	300	< 10	11	18	18	30
		2	x	x	x	x	x*	x*	–	–	–	–	–	–	–	–	–	1/100	1.5/150	45	300	< 10	11	18	18	30
188093	ELXc 135.856	1	x*	x*	x	x	–	–	–	–	–	–	–	–	–	–	–	1/100	2/200	44	330	< 10	11	18	18	30
188094	ELXc 235.857	2	x*	x*	x	x	x	x*	x*	–	–	–	–	–	–	–	–	1/100	2/200	45	330	< 10	9	15	15	25
183039	ELXc 424.223	1	x*	x*	x	x	–	–	–	–	–	–	–	–	–	–	–	1/100	2/200	28	330	< 10	11	18	18	30
188132	ELXc 257.836	2	x*	x*	x	x	x	x*	x*	–	–	–	–	–	–	–	–	1/100	1.5/150	47	350	< 10	7	12	12	20
188140	ELXc 140.862	1	x*	x*	x	x	–	–	–	–	–	–	–	–	–	–	–	1/100	2/200	45	250	< 10	11	18	18	30
188142	ELXc 154.864	1	x*	x*	x	x	–	–	–	–	–	–	–	–	–	–	–	1/100	2/200	34	300	< 10	9	15	15	25
188144	ELXc 180.866	1	x*	x*	x	x	–	–	–	–	–	–	–	–	–	–	–	1/100	2/200	45	300	< 10	9	15	15	25
188238	ELXc 120.838	1	x	x	–	–	–	x*	x*	–	–	–	–	–	–	–	–	1/100	1.5/150	53	420	< 10	7	12	12	20
		2	x	x	x	–	x	x*	x*	–	–	–	–	–	–	–	–	1/100	1.5/150	53	420	< 10	7	12	12	20
188273	ELXc 120.838	1	x	x	–	–	–	x*	x*	–	–	–	–	–	–	–	–	1/100	1.5/150	53	420	< 10	7	12	12	20
		2	x	x	x	–	x	x*	x*	–	–	–	–	–	–	–	–	1/100	1.5/150	53	420	< 10	7	12	12	20
188314	ELXc 136.200	1	x	x	–	–	–	x*	x*	–	–	–	–	–	–	–	–	1/100	2/200	48	330	< 10	11	18	18	30
188315	ELXc 158.201	1	x	x	–	–	–	x*	x*	–	–	–	–	–	–	–	–	1/100	2/200	36	300	< 10	9	15	15	25
188316	ELXc 236.202	2	x	x	x	–	x	x*	x*	–	–	–	–	–	–	–	–	1/100	2/200	48	430	< 10	11	18	18	30
188317	ELXc 258.203	2	x	x	x	–	x	x*	x*	–	–	–	–	–	–	–	–	1/100	2/200	36	300	< 10	7	12	12	20
188319	ELXc 170.205	1	x	x	–	–	–	x*	x*	–	–	–	–	–	–	–	–	1/100	2/200	37	380	< 10	11	18	18	30
188320	ELXc 270.206	2	x	x	x	–	x	x*	x*	–	–	–	–	–	–	–	–	1/100	2/200	51	380	< 10	6	11	11	18
188400	ELXc 257.836	2	x*	x*	x	x	x	x*	x*	–	–	–	–	–	–	–	–	1/100	1.5/150	47	350	< 10	7	12	12	20
188438	ELXc 414.868	3	x*	x*	–	x	x	x	x	–	–	x	x	–	–	–	–	1/100	2/200	45	400	< 10	7	12	12	20
		4	x*	x*	–	x	x	x	x	x	x	x	x	–	–	–	–	1/100	2/200	45	400	< 10	7	12	12	20
188454	ELXc 113.392	1	x	x	x*	x*	–	–	–	–	–	–	–	–	–	–	–	1/100	1.5/150	44	350	16	50	80	50	80
188589	ELXc 128.869	1	x*	x*	x	x	–	–	–	–	–	–	–	–	–	–	–	1/100	1.5/150	54	450	< 10	11	18	18	30
188590	ELXc 128.869	1	x*	x*	x	x	–	–	–	–	–	–	–	–	–	–	–	1/100	1.5/150	54	450	< 10	11	18	18	30
188595	ELXc 336.214	3	x	x	x	x	x	x	x*	x*	–	–	–	–	–	–	–	1/100	2/200	70	370	< 10	6	11	11	18
188616	ELXc 240.863	2	x*	x*	x	–	x	x	x	–	–	–	–	–	–	–	–	1/100	2/200	46	360	< 15	7	12	12	20
188617	ELXc 249.859	2	x*	x*	x	x	x	x*	x*	–	–	–	–	–	–	–	–	1/100	2/200	43	480	< 10	7	12	12	20
188618	ELXc 254.865	2	x*	x*	x	–	x	x	x	–	–	–	–	–	–	–	–	1/100	2/200	43	390	< 10	7	12	12	20
188619	ELXc 280.538	2	x*	x*	x	x	x	x*	x*	–	–	–	–	–	–	–	–	1/100	2/200	50	420	< 10	–	10	–	10
188643	ELXc 242.837	2	x	x	x	x	x*	x*	–	–	–	–	–	–	–	–	–	1/100	1.5/150	43	440	< 15	7	12	12	20
188680	ELXc 155.378	1	x	x	x*	x*	–	–	–	–	–	–	–	–	–	–	–	1/100	1.5/150	47	250	< 15	7	12	12	20
188681	ELXc 155.378	1	x	x	x*	x*	–	–	–	–	–	–	–	–	–	–	–	1/100	1.5/150	47	250	< 15	7	12	12	20
188682	ELXc 170.833	1	x*	x*	–	–	–	x	x	–	–	–	–	–	–	–	–	1/100	1.5/150	44	350	< 10	7	12	12	20
188683	ELXc 170.833	1	x*	x*	–	–	–	x	x	–	–	–	–	–	–	–	–	1/100	1.5/150	44	350	< 10	7	12	12	20
188687	ELXc 242.837	2	x	x	x	x	x*	x*	–	–	–	–	–	–	–	–	–	1/100	1.5/150	43	440	< 15	7	12	12	20
188698	ELXc 213.870	1	x	x	–	–	x*	x*	–	–	–	–	–	–	–	–	–	1/100	1.5/150	42	250	< 20	11	18	18	30
		2	x	x	x	x	x*	x*	–	–	–	–	–	–	–	–	–	1/100	1.5/150	42	250	< 20	11	18	18	30
188699	ELXc 218.871	1	x	x	–	–	x*	x*	–	–	–	–	–	–	–	–	–	1/100	1.5/150	35	350	< 12	11	18	18	30
		2	x	x	x	x	x*	x*	–	–	–	–	–	–	–	–	–	1/100	1.5/150	35	350	< 12	11	18	18	30
188700	ELXc 142.872	1	x	x	–	–	x*	x*	–	–	–	–	–	–	–	–	–	1/100	1.5/150	44	480	< 15	11	18	18	30
		2	x	x	x	x	x*	x*	–	–	–	–	–	–	–	–	–	1/100	1.5/150	44	480	< 15	11	18	18	30
188704	ELXc 136.207	1	x	x	–	–	x*	x*	–	–	–	–	–	–	–	–	–	–	–	48	350	< 20	11	18	18	30
188705	ELXc 236.208	2	x	x	x	x	x*	x*	–	–	–	–	–	–	–	–	–	–	–	45	250	< 20	11	18	18	30
188706	ELXc 158.209	1	x	x	–	–	x*	x*	–	–	–	–	–	–	–	–	–	–	–	33	250	< 20	9	15	15	25
188707	ELXc 258.210	2	x	x	x	x	x*	x*	–	–	–	–	–	–	–	–	–	–	–	48	350	< 20	7	12	12	19
188708	ELXc 136.207	1	x	x	–	–	x*	x*	–	–	–	–	–	–	–	–	–	–	–	48	350	< 20	11	18	18	30
188709	ELXc 236.208	2	x	x	x	x	x*	x*	–	–	–	–	–	–	–	–	–	–	–	45	250	< 20	11	18	18	30
188710	ELXc 158.209	1	x	x	–	–	x*	x*	–	–	–	–	–	–	–	–	–	–	–	33	250	< 20	9	15	15	25
188711	ELXc 258.210	2	x	x	x	x	x*	x*	–	–	–	–	–	–	–	–	–	–	–	48	350	< 20	7	12	12	19
188712	ELXc 213.870	1	x	x	–	–	x*	x*	–	–	–	–	–	–	–	–	–	1/100	1.5/150	42	250	< 20	11	18	18	30
		2	x	x	x	x	x*	x*	–	–	–	–	–	–	–	–	–	1/100	1.5/150	42	250	< 20	11	18	18	30
188713	ELXc 218.871	1	x	x	–	–	x*	x*	–	–	–	–	–	–	–	–	–	1/100	1.5/150	35	350	< 12	11	18	18	30
		2	x	x	x	x	x*	x*	–	–	–	–	–	–	–	–	–	1/100	1.5/150	35	350	< 12	11	18	18	30
188714	ELXc 142.872	1	x	x	–	–	x*	x*	–	–	–	–	–	–	–	–	–	1/100	1.5/150	44	480	< 15	11	18	18	30
		2	x	x	x	x	x*	x*	–	–	–	–	–	–	–	–	–	1/100	1.5/150	44	480	< 15	11	18	18	30
188744	ELXc 418.204	3	x*	x*	–	x	x	x	x	–	–	x	x	–	–	–	–	1/100	2/200	44	480	< 10	7	12	12	20
		4	x*	x*	–	x	x	x	x	x	x	x	x	–	–	–	–	1/100	2/200	44	480	< 10	7	12	12	20

Electronic ballasts		Lamp	Electronic ballasts															Max. lead length		Operation	Output	THD	Possible quantity of			
Ref. No.	Type	Quantity	Terminals															hot*	cold	frequency	voltage		EB/automatic cut-outs			
			1	2	3	4	5	6	7	8	9	10	11	12	13	14	15				U_{OUT}		B	B	C	C
																		(m/pf)	(m/pf)	kHz	V	%	(10A)	(16A)	(10A)	(16A)
ELXc																										
188760	ELXc 217.873	1	x	x	–	–	x*	x*	–	–	–	–	–	–	–	–	–	1/75	1.5/100	48	470	< 10	7	12	12	20
		2	x	x	x	x	x*	x*	–	–	–	–	–	–	–	–	–	1/75	1.5/100	48	430	< 10	17	28	28	46
188761	ELXc 217.873	1	x	x	–	–	x*	x*	–	–	–	–	–	–	–	–	–	1/75	1.5/100	48	430	< 20	17	28	28	46
		2	x	x	x	x	x*	x*	–	–	–	–	–	–	–	–	–	1/75	1.5/100	48	430	< 10	17	28	28	46
188868	ELXc 136.216	1	x	x	–	–	x*	x*	–	–	–	–	–	–	–	–	–	1/75	1.5/100	47.5	430	< 20	17	28	28	46
188869	ELXc 236.217	2	x*	x*	x	x	x*	x*	–	–	–	–	–	–	–	–	–	1/75	1.5/100	45	430	< 10	8	13	13	21
188870	ELXc 158.218	1	x	x	–	–	x*	x*	–	–	–	–	–	–	–	–	–	1/75	1.5/100	34	430	< 10	12	19	19	31
188871	ELXc 258.219	2	x*	x*	x	x	x*	x*	–	–	–	–	–	–	–	–	–	1/75	1.5/100	52	430	< 10	8	13	13	21
188886	ELXc 213.874	1	x	x	–	–	x*	x*	–	–	–	–	–	–	–	–	–	1/75	1.5/100	44	250	< 10	11	18	18	30
		2	x	x	x	x	x*	x*	–	–	–	–	–	–	–	–	–	1/75	1.5/100	44	250	< 10	11	18	18	30
188887	ELXc 218.875	1	x	x	–	–	x*	x*	–	–	–	–	–	–	–	–	–	1/75	1.5/100	37	350	< 10	11	18	18	30
		2	x	x	x	x	x*	x*	–	–	–	–	–	–	–	–	–	1/75	1.5/100	37	350	< 10	11	18	18	30
188888	ELXc 142.876	1	x	x	–	–	x*	x*	–	–	–	–	–	–	–	–	–	1/75	1.5/100	44	480	< 10	11	18	18	30
		2	x	x	x	x	x*	x*	–	–	–	–	–	–	–	–	–	1/75	1.5/100	44	480	< 10	11	18	18	30
188889	ELXc 242.877	1	x	x	–	–	x*	x*	–	–	–	–	–	–	–	–	–	1/75	1.5/100	45	480	< 10	7	12	12	20
		2	x	x	x	x	x*	x*	–	–	–	–	–	–	–	–	–	1/75	1.5/100	45	480	< 10	7	12	12	20
188912	ELXc 136.216	1	x	x	–	–	x*	x*	–	–	–	–	–	–	–	–	–	1/75	1.5/100	47.5	430	< 20	17	28	28	46
188913	ELXc 236.217	2	x*	x*	x	x	x*	x*	–	–	–	–	–	–	–	–	–	1/75	1.5/100	45	430	< 10	17	28	28	46
188914	ELXc 158.218	1	x	x	–	–	x*	x*	–	–	–	–	–	–	–	–	–	1/75	1.5/100	34	430	< 10	17	28	28	46
188915	ELXc 258.219	2	x*	x*	x	x	x*	x*	–	–	–	–	–	–	–	–	–	1/75	1.5/100	52	430	< 10	17	28	28	46
188921	ELXc 135.220	1	x*	x*	x	x	–	–	–	–	–	–	–	–	–	–	–	1/100	2/150	41	300	< 10	11	18	18	30
188922	ELXc 235.221	2	x	x	x	x	x	x*	x*	–	–	–	–	–	–	–	–	1/100	2/150	41	300	<10	11	18	18	30
188945	ELXc 139.632	1	x	x	x*	x*	–	–	–	–	–	–	–	–	–	–	–	1/75	2/150	42-85	330	< 15	17	28	29	47
188946	ELXc 149.633	1	x	x	x*	x*	–	–	–	–	–	–	–	–	–	–	–	1/75	2/150	42-85	330	< 10	17	28	29	47
188947	ELXc 180.634	1	x	x	x*	x*	–	–	–	–	–	–	–	–	–	–	–	1/75	2/150	42-85	330	< 10	8	13	13	22
188948	ELXc 239.635	2	x	x	x	x*	x*	x*	x*	–	–	–	–	–	–	–	–	1/75	2/150	42-85	330	< 10	8	13	13	22
188949	ELXc 249.636	2	x	x	x	x*	x*	x*	x*	–	–	–	–	–	–	–	–	1/75	2/150	42-85	330	< 7	8	13	13	22
188950	ELXc 280.637	2	x	x	x	x*	x*	x*	x*	–	–	–	–	–	–	–	–	1/75	2/150	45-70	330	< 10	5	9	9	15
ELXd																										
188276	ELXd 170.808	1	x*	x*	x	x	–	–	–	–	–	–	–	–	–	–	–	0.5/50	0.75/75	50-90	470	< 10	7	12	12	20
188329	ELXd 124.600	1	x	x	–	–	–	x*	x*	–	–	–	–	–	–	–	–	1/100	1.5/150	76-120	430	< 10	17	28	28	46
188330	ELXd 224.601	2	x	x	x	x*	x*	x*	x*	–	–	–	–	–	–	–	–	1/100	1.5/150	53-120	430	< 10	17	28	28	46
188331	ELXd 139.602	1	x	x	–	–	–	x*	x*	–	–	–	–	–	–	–	–	1/100	1.5/150	85-120	430	< 10	17	28	28	46
188332	ELXd 154.603	1	x	x	–	–	–	x*	x*	–	–	–	–	–	–	–	–	1/100	1.5/150	83-120	430	< 10	17	28	28	46
188333	ELXd 254.604	2	x	x	x	x*	x*	x*	x*	–	–	–	–	–	–	–	–	1/100	1.5/150	44-120	430	< 10	8	13	13	21
188334	ELXd 180.605	1	x	x	–	–	–	x*	x*	–	–	–	–	–	–	–	–	1/100	1.5/150	91-120	430	< 10	12	19	19	31
188335	ELXd 249.606	2	x	x	x	x*	x*	x*	x*	–	–	–	–	–	–	–	–	1/100	1.5/150	44-120	430	< 10	8	13	13	21
188336	ELXd 124.607	1	x	x	–	–	–	x*	x*	–	–	–	–	–	–	–	–	1/100	1.5/150	76-120	430	< 10	17	28	28	46
188337	ELXd 224.608	2	x	x	x	x*	x*	x*	x*	–	–	–	–	–	–	–	–	1/100	1.5/150	53-120	430	< 10	17	28	28	46
188338	ELXd 139.609	1	x	x	–	–	–	x*	x*	–	–	–	–	–	–	–	–	1/100	1.5/150	85-120	430	< 10	17	28	28	46
188339	ELXd 239.610	2	x	x	x	x*	x*	x*	x*	–	–	–	–	–	–	–	–	1/100	1.5/150	53-120	430	< 10	17	28	28	46
188340	ELXd 154.611	1	x	x	–	–	–	x*	x*	–	–	–	–	–	–	–	–	1/100	1.5/150	83-120	430	< 10	17	28	28	46
188341	ELXd 254.612	2	x	x	x	x*	x*	x*	x*	–	–	–	–	–	–	–	–	1/100	1.5/150	44-120	430	< 10	8	13	13	21
188342	ELXd 180.613	1	x	x	–	–	–	x*	x*	–	–	–	–	–	–	–	–	1/100	1.5/150	91-120	430	< 10	12	19	19	31
188343	ELXd 249.614	2	x	x	x	x*	x*	x*	x*	–	–	–	–	–	–	–	–	1/100	1.5/150	44-120	430	< 10	8	13	13	21
188344	ELXd 118.615	1	x	x	–	–	–	x*	x*	–	–	–	–	–	–	–	–	1/100	1.5/150	51-120	300	< 10	17	28	28	46
188345	ELXd 218.616	2	x	x	x	x*	x*	x*	x*	–	–	–	–	–	–	–	–	1/100	1.5/150	51-120	300	< 10	12	19	19	31
188346	ELXd 136.617	1	x	x	–	–	–	x*	x*	–	–	–	–	–	–	–	–	1/100	1.5/150	48-120	430	< 10	17	28	28	46
188347	ELXd 236.618	2	x	x	x	x*	x*	x*	x*	–	–	–	–	–	–	–	–	1/100	1.5/150	48-120	430	< 10	17	28	28	46
188348	ELXd 158.619	1	x	x	–	–	–	x*	x*	–	–	–	–	–	–	–	–	1/100	1.5/150	46-120	430	< 10	17	28	28	46
188349	ELXd 258.620	2	x	x	x	x*	x*	x*	x*	–	–	–	–	–	–	–	–	1/100	1.5/150	46-120	430	< 10	8	13	13	21
188350	ELXd 239.621	2	x	x	x	x*	x*	x*	x*	–	–	–	–	–	–	–	–	1/100	1.5/150	53-120	430	< 10	17	28	28	46
188431	ELXd 226.801	2	x	x	x	x	x*	x*	–	–	–	–	–	–	–	–	–	0.5/50	0.75/75	50-90	470	< 10	7	12	12	20
188490	ELXd 226.801	2	x	x	x	x	x*	x*	–	–	–	–	–	–	–	–	–	0.5/50	0.75/75	50-90	470	< 10	7	12	12	20
188495	ELXd 170.808	1	x*	x*	x	x	–	–	–	–	–	–	–	–	–	–	–	0.5/50	0.75/75	50-90	470	< 10	7	12	12	20
188549	ELXd 218.803	2	x*	x*	x	x	x	x*	x*	–	–	–	–	–	–	–	–	0.5/50	0.75/75	60-99	300	< 10	11	18	18	30
188550	ELXd 242.807	2	x*	x*	x	x	x	x*	x*	–	–	–	–	–	–	–	–	0.5/50	0.75/75	45-95	400	< 10	7	12	12	20
188564	ELXd 118.802	1	x	x	–	–	x*	x*	–	–	–	–	–	–	–	–	–	0.5/50	0.75/75	60-105	400	< 10	11	18	18	30
188565	ELXd 142.806	1	x	x	–	–	x*	x*	–	–	–	–	–	–	–	–	–	0.5/50	0.75/75	40-95	400	< 10	11	18	18	30
188596	ELXd 318.622	3	–	x*	x*	x*	x*	x*	x*	–	–	–	–	x*	x*	x*	x*	0.5/50	–	45-120	430	< 10	17	28	28	46
188597	ELXd 324.623	3	–	x*	x*	x*	x*	x*	x*	–	–	–	–	x*	x*	x*	x*	0.5/50	–	67-120	430	< 10	8	13	13	21
188598	ELXd 424.624	4	–	x*	x*	x*	x*	x*	x*	x*	x*	–	–	x*	x*	x*	x*	0.5/50	–	45-120	430	< 10	8	13	13	21
188599	ELXd 418.625	4	–	x*	x*	x*	x*	x*	x*	x*	x*	–	–	x*	x*	x*	x*	0.5/50	–	45-120	430	< 10	12	19	19	31
188600	ELXd 324.626	3	–	x*	x*	x*	x*	x*	x*	–	–	–	–	x*	x*	x*	x*	0.5/50	–	67-120	430	< 10	8	13	13	21

Electronic ballasts		Lamp	Electronic ballasts															Max. lead length		Operation	Output	THD	Possible quantity of			
Ref. No.	Type	Quantity	Terminals															hot*	cold	frequency	voltage		EB/automatic cut-outs			
			1	2	3	4	5	6	7	8	9	10	11	12	13	14	15				U_{OUT}		B	B	C	C
																		(m/pf)	(m/pf)	kHz	V	%	(10A)	(16A)	(10A)	(16A)
ELXd																										
188601	ELXd 318.627	3	–	x*	x*	x*	x*	x*	x*	–	–	–	–	x*	x*	x*	x*	0.5/50	–	45-120	430	< 10	17	28	28	46
188602	ELXd 424.628	4	–	x*	x*	x*	x*	x*	x*	x*	x*	–	–	x*	x*	x*	x*	0.5/50	–	45-120	430	< 10	8	13	13	21
188603	ELXd 418.629	4	–	x*	x*	x*	x*	x*	x*	x*	x*	–	–	x*	x*	x*	x*	0.5/50	–	45-120	430	< 10	12	19	19	31
188604	ELXd 280.630	2	x	x	x	x*	x*	x*	x*	–	–	–	–	–	–	–	–	1/100	1.5/150	44-120	430	< 10	5	9	9	15
188605	ELXd 280.631	2	x	x	x	x*	x*	x*	x*	–	–	–	–	–	–	–	–	1/100	1.5/150	44-120	430	< 10	5	9	9	15
188694	ELXd 118.802	1	x	x	–	–	x*	x*	–	–	–	–	–	–	–	–	–	0.5/50	0.75/75	60-105	400	< 10	11	18	18	30
188695	ELXd 142.806	1	x	x	–	–	x*	x*	–	–	–	–	–	–	–	–	–	0.5/50	0.75/75	40-95	400	< 10	11	18	18	30
188696	ELXd 218.803	2	x*	x*	x	x	x	x*	x*	–	–	–	–	–	–	–	–	0.5/50	0.75/75	60-99	300	< 10	11	18	18	30
188697	ELXd 242.807	2	x*	x*	x	x	x	x*	x*	–	–	–	–	–	–	–	–	0.5/50	0.75/75	45-95	400	< 10	7	12	12	20
188717	ELXd 135.823	1	x*	x*	x	x	–	–	–	–	–	–	–	–	–	–	–	1.0/75	1.5/100	45	420	< 10	30	50	30	50
188864	ELXd 117.715	1	–	–	x*	x*	x*	x*	–	–	–	–	–	–	–	–	–	0.5/50	1.5/150	47-80	400	< 10	10	15	15	25
188865	ELXd 117.715	1	–	–	x*	x*	x*	x*	–	–	–	–	–	–	–	–	–	0.5/50	1.5/150	47-80	400	< 10	10	15	15	25
188866	ELXd 217.717	2	x*	x*	x*	x*	x*	x*	x*	–	–	–	–	–	–	–	–	0.5/50	1.5/150	34-94	250	< 10	11	18	18	30
188867	ELXd 217.717	2	x*	x*	x*	x*	x*	x*	x*	–	–	–	–	–	–	–	–	0.5/50	0.5/50	34-94	250	< 10	11	18	18	30
188873	ELXd 118.718	1	x*	x*	x	x	–	–	–	–	–	–	–	–	–	–	–	1.5/150	2.0/200	55-113	300	< 5	15	24	25	40
188874	ELXd 218.719	2	x*	x*	x	x	x	x*	x*	–	–	–	–	–	–	–	–	1.5/150	2.0/200	42-114	400	< 5	17	27	28	46
188875	ELXd 136.720	1	x*	x*	x	x	–	–	–	–	–	–	–	–	–	–	–	1.5/100	2.0/200	47-105	300	< 5	15	24	25	40
188876	ELXd 236.721	2	x*	x*	x	x	x	x*	x*	–	–	–	–	–	–	–	–	1.5/100	2.0/200	42-107	400	< 5	17	27	27	44
188877	ELXd 158.722	1	x*	x*	x	x	–	–	–	–	–	–	–	–	–	–	–	1.5/100	2.0/200	47-105	300	< 8	15	24	25	40
188878	ELXd 258.723	2	x*	x*	x	x	x	x*	x*	–	–	–	–	–	–	–	–	1.5/150	2.0/200	45-110	400	< 10	11	18	19	31
188923	ELXd 142.709	1	–	–	x*	x*	x*	x*	–	–	–	–	–	–	–	–	–	0.5/50	0.5/50	41-104	400	< 10	8	12	12	20
188924	ELXd 142.709	1	–	–	x*	x*	x*	x*	–	–	–	–	–	–	–	–	–	0.5/50	0.5/50	41-104	400	< 10	8	12	12	20
188952	ELXd 118.705	1	–	–	x*	x*	x*	x*	–	–	–	–	–	–	–	–	–	0.5/50	0.5/50	47	250	< 10	13	20	21	34
188953	ELXd 118.705	1	–	–	x*	x*	x*	x*	–	–	–	–	–	–	–	–	–	0.5/50	0.5/50	47	250	< 10	13	20	21	34
188954	ELXd 218.707	2	x*	x*	x*	x*	x*	x*	x*	–	–	–	–	–	–	–	–	0.5/50	0.5/50	41	250	< 10	12	20	21	33
188955	ELXd 218.707	2	x*	x*	x*	x*	x*	x*	x*	–	–	–	–	–	–	–	–	0.5/50	0.5/50	41	250	< 10	12	20	21	33
188974	ELXd 242.711	2	x*	x*	x*	x*	x*	x*	x*	–	–	–	–	–	–	–	–	0.5/50	0.5/50	40	250	< 10	12	20	21	33
188975	ELXd 242.711	2	x*	x*	x	x*	x*	x*	–	–	–	–	–	–	–	–	–	0.5/50	0.5/50	40	250	< 10	12	20	21	33
ELXe																										
188130	ELXe 258.222	1	–	x	–	–	–	x*		–	–	–	–	–	–	–	–	1/100	2/200	35	330	< 10	7	12	12	20
		2	–	x	x	–	–	x*	–	–	–	–	–	–	–	–	–	1/100	2/200	35	330	< 10	7	12	12	20
188136	ELXe 218.526	1	–	x	–	–	–	x*	–	–	–	–	–	–	–	–	–	1/100	2/200	29	250	< 10	11	18	18	30
		2	–	x	x	–	–	x*	–	–	–	–	–	–	–	–	–	1/100	2/200	29	250	< 10	11	18	18	30
188137	ELXe 238.527	1	–	x	–	–	–	x*	–	–	–	–	–	–	–	–	–	1/100	2/200	26	350	< 10	7	12	12	20
		2	–	x	x	–	–	x*	–	–	–	–	–	–	–	–	–	1/100	2/200	26	350	< 10	7	12	12	20
188660	ELXe 418.215	4	x*	x*	x	–	–	–	–	–	–	–	–	–	–	–	–	1/100	1.5/150	26.5	480	< 20	7	12	12	19
ELXs																										
188661	ELXs 116.900	1	x*	x*	x	x	–	–	–	–	–	–	–	–	–	–	–	1/100	2/150	43	250	–	27	43	44	72
188662	ELXs 116.903	1	x	x	x*	x*	–	–	–	–	–	–	–	–	–	–	–	1/100	2/150	43	250	–	27	43	44	72
188663	ELXs 121.901	1	x*	x*	x	x	–	–	–	–	–	–	–	–	–	–	–	1/100	2/150	40	250	–	54	86	88	148
188664	ELXs 121.904	1	x	x	x*	x*	–	–	–	–	–	–	–	–	–	–	–	1/100	2/150	40	250	–	54	86	88	148
188665	ELXs 124.902	1	x*	x*	x	x	–	–	–	–	–	–	–	–	–	–	–	1/100	2/150	47	250	–	54	86	88	148
188666	ELXs 124.905	1	x	x	x*	x*	–	–	–	–	–	–	–	–	–	–	–	1/100	2/150	47	250	–	54	86	88	148
188667	ELXs 126.906	1	x*	x*	x	x	–	–	–	–	–	–	–	–	–	–	–	1/100	2/150	42	250	–	27	43	44	72
188668	ELXs 126.907	1	x	x	x*	x*	–	–	–	–	–	–	–	–	–	–	–	1/100	2/150	42	250	–	27	43	44	72
188934	ELXs 117.908	1	x*	x*	x	x	–	–	–	–	–	–	–	–	–	–	–	1/100	2/200	45	250	–	60	95	97	163

Electromagnetic ballasts

Electromagnetic (inductive) ballasts are active components that in conjunction with starters preheat the lamp electrodes, supply the ignition voltage and stabilise lamp currents during operation. Series or parallel capacitors are required to compensate blind current.

For installation in luminaires, consideration must be taken of the mains voltage and mains frequency, the dimensions and maximum thermal values as well as any potential noise generation. To fulfil these special requirements, Vossloh-Schwabe provides a large variety of different ballasts.

VS magnetic ballasts have been optimised with regard to their magnetic fields and loads so that usually so that noise cannot usually be perceived. However, the luminaire design can cause magnetic vibrations to affect large areas. When designing luminaires, it might therefore be necessary to fit a concertina section or grooves to prevent vibrations from spreading and thus from noise being generated.

The service life of an inductive ballast is mainly determined by the material chosen for the winding insulation. The maximum winding temperature denotes the temperature (tw) that the insulation will withstand for a period of 10 years given continuous operation under rated conditions. This maximum winding temperature must not be exceeded in real conditions to ensure the ballast can achieve its full service life. The winding temperature of the ballast that is measured in the luminaire is made up of the ambient temperature of the luminaire, the thermal conditions within the luminaire and the power loss of the ballast. The Δt marking on the ballast type plate provides a measure of the power loss of the ballast. In addition to this, the power loss of ballast-lamp circuits is measured in accordance with EN 50294. This test method forms the basis for the CELMA energy classification of ballasts and is also applied in European Regulation 245/2009/EG "Definition of eco-design requirements regarding fluorescent lamps without an integrated ballast, high-pressure discharge lamps as well as ballasts and luminaires in their operation and the invalidation of Directive 2000/55/EC" (see pages 376–378 for further details).

As a result of their design features, inductive ballasts cause leak current that is discharged via the earth conductor of the luminaire. The maximum permissible leak current for protection class I luminaires is 1 mA, a value of which all Vossloh-Schwabe electronic ballasts fall clearly short. Values of max. 0.1 mA are measured per electromagnetic ballast. However, as these values accumulate with the number of installed ballasts, this should be taken into account when dimensioning the F1 protective switch.

Starters for fluorescent lamps

As mentioned above, the operation of fluorescent lamps also requires starters in addition to ballasts. A distinction is made between glow starters, which are also available with automatic cut-outs, and electronic starters. The correct choice of voltage and power range is crucial. Starters are available for 220–240 V and for 110–127 V mains voltage. The latter are also required for twin-lamp operation (e.g. 2x18 W at 230 V).

Operating SL-series VS ballasts (100–127 V) depends on the use of a 220–240 V starter as these operating devices are high-reactance transformers that supply higher voltages to the lamp. Starters should only be used with starter contacts with a hardness value of at least HB 100.

Assembly Instructions for Electromagnetic Ballasts

For mounting and installing of electromagnetic ballasts for fluorescent lamps

Mandatory regulations

DIN VDE 0100	Erection of low voltage installations
EN 60598-1	Luminaires – part 1: general requirements and tests
EN 61347-1	Operating devices for lamps – part 1: general and safety requirements
EN 61347-2-8	Operating devices for lamps – part 2-8: special requirements for ballasts for fluorescent lamps
EN 60921	Ballasts for fluorescent tube lamps – performance requirements
EN 50294	Methods for measuring the total input power of ballast-lamp circuits
EN 55015	Maximum values and methods of measurement for RFI suppression in electrical lighting installations and similar electrical appliances
EN 61000-3-2	Electromagnetic Compatibility (EMC) – part 3: maximum values – main section part 2: maximum values for mains harmonics (device input current up to and including 16 A per conductor)
EN 61547	Installations for general lighting purposes – EMC immunity requirements

Technical specifications

Operating voltage range
VS ballasts can be operated at the specified mains voltage within a tolerance range of ±10%

Leak current ≤ 0.1 mA per ballast

Error current Impulse-resistant leak-current protection must be installed. Distribute the luminaires to phases L1, L2 and L3; install tri-phase FI switches. If permissible, install FI switches with 30 mA leak current; connect no more than 15 luminaires as FI switches can be triggered at half the leak current value.

Power factor Inductive ballasts: $\lambda \leq 0.5$
Parallel-compensated ballasts: $\lambda \geq 0.85$

Compensation VS recommends the use of parallel capacitors owing to their technical advantages and power balance.

Possible interference with IR systems
Are not known to occur

Mechanical mounting

Mounting position
Any

Mounting location
Ballasts are designed for installation in luminaires or comparable devices. Independent ballasts do not need to be installed in a casing.

Fastening
Preferably using screws Ø 4 mm

Maximum temperatures
The stipulated winding temperature (tw 130, tw 140 and tw 150, respectively) must not be exceeded during normal operation. The corresponding maximum values (232°C, 248°C and 264°C, respectively) must be observed during anomalous operation. These values must be checked by measuring resistance during operation.

Temperature increase
The lamp current flowing through the ballast generates a power loss that leads to an increase in winding temperature. The Δt values for normal and abnormal operation provide a measure of this temperature increase. The Δt values are ascertained using standardised connections for measurement and are provided on the ballast type plate in Kelvin.

Example: Δt = 55 K/140 K:
The first Δt value indicates the temperature increase for normal operation at the lamp's operating current. The second value, 140 K in this case, denotes the temperature increase of the winding that results from the current that flows when the lamp's discharge path is short-circuited. The current that flows in this state is the preheat current through the lamp's electrodes.

Electromagnetic compatibility (EMC)

Interference
Interference voltage measurements have to be taken at the connection terminals for luminaires with magnetic ballasts as these are systems that operate with lamp voltages of under 100 Hz. These low-frequency interference voltages are generally not critical with magnetic ballasts.

Interference immunity
Thanks to the robust design and choice of materials, magnetic ballasts provide a high degree of interference immunity and are not impaired by admissible mains power interference.

Mains Harmonics
After every zero crossing of the lamp current, fluorescent lamps experience a re-ignition peak as the lamps go out for a brief (imperceptible) moment. These re-ignition peaks generate mains harmonics that are smoothed by the ballast's impedance. The right design, i.e. determining the operating point of the magnetic ballast, ensures mains harmonics are limited to the maximum values permitted by EN 61000-3-2. VS electromagnetic ballasts all comply with the stipulated maximum values.

Selection of automatic cut-outs for VS electromagnetic ballasts

Dimensioning automatic cut-outs

When a ballast is switched on, high transient current peaks occur due to parasite capacitances that can accumulate with the number of luminaires. These high system switch-on currents put a strain on the automatic conductor cut-outs. For this reason, only surge-current-proof automatic cut-outs should be used for lighting systems.

Release reaction

The release reaction of the automatic conductor cut-outs comply with VDE 0641, part 11, for B and C characteristics.

No. of ballasts

The following values are meant as guidelines only and may vary depending on the respective lighting system. The maximum number of VS ballasts applies to cases where the devices are switched on simultaneously. Specifications apply to single-pole fuses. The number of permissible ballasts must be reduced by 20% for multi-pole fuses. The considered circuit impedance equals 400 mΩ (approx. 20 m of [2.5 m²] conductor from the power supply to the distributor and a further 15 m to the luminaire). Doubling circuit impedance to 800 mΩ increases the possible number of ballasts by 10%. The values quoted in the following tables are guidelines and can be affected by system-specific factors.

Possible number of ballasts connected to automatic cut-outs for compact fluorescent lamps (single lamp operation)

Lamp output	10 A (B)		16 A (B)	
W	Inductive	Parallel compensation	Inductive	Parallel compensation
5/7/8/9/10/11/13	50	90	80	130
18 (TC-L)	27	32	43	51
18 (TC-D)	40	65	65	110
24	25	32	40	51
26	27	32	43	51
36	23	32	37	51

Possible number of ballasts connected to automatic cut-outs for tubular and U-shaped fluorescent lamps (single lamp operation)

Lamp output	10 A (B)		16 A (B)	
W	Inductive	Parallel compensation	Inductive	Parallel compensation
4/6/8/10	50	90	80	130
13	45	80	70	115
15/18/20	27	32	43	51
30/36/38/40	23	32	37	51
58/65	15	20	22	32
70	13	18	20	30

Reliability and service life

Provided the specified maximum values for the winding temperature are complied with, a service life of 10 years can be expected. Failure rate: ≤ 0.025%/1,000 hours.

Electrical installation

Connection terminals (combination terminals)

- Use copper (not stranded) wire
- Required diameter for push-in connection 0.5–1 mm²
- Stripped lead length 8 mm
- Required cross-section for IDC zone 0.5 mm²; max. Ø 2 mm including Insulation, no wire stripping required; mounting requires a special tool

Push-in terminals The integrated terminals can only be used with rigid leads. Rigid leads: 0.5–1.5 mm². The stripped lead length totals 8 mm.

Wiring The wiring between the mains, ballasts and lamps must comply with the respective circuit diagram.

Circuit diagrams for the operation of fluorescent lamps with Vossloh-Schwabe electromagnetic ballasts

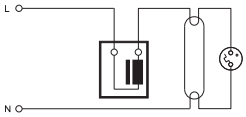

Inductive single circuit

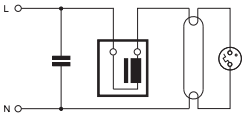

Parallel-compensated single circuit

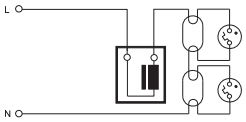

Inductive tandem circuit

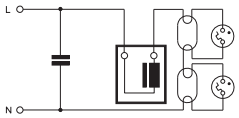

Parallel-compensated tandem circuit

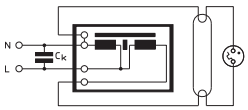

Parallel-compensated single circuit with high-reactance transformer

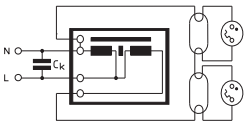

Parallel-compensated tandem circuit with high-reactance transformer

Connection terminals
In the interest of ensuring firm contacts and long component service life, Vossloh-Schwabe uses only top-quality materials for plastic or metal parts during the production of connection terminals. These quality features apply to both Vossloh-Schwabe's luminaire connection terminals as well as to the terminals fitted to ballasts and lampholders.

Notes on connection terminals on electronic ballasts
Vossloh-Schwabe electronic ballasts are fitted with installation-friendly push-in connectors. In addition, many models for linear fluorescent lamps are also available with IDC terminals (for solid conductors 0.5 mm²) and supplementary push-in terminals (for solid conductors 0.5–1 mm²), stripped length 8–9 mm. IDC terminals permit automated luminaire wiring and testing using the ALF system and are thus particularly efficient.

Notes on connection terminals on electromagnetic ballasts
Standard issue Vossloh-Schwabe electromagnetic ballasts are fitted with installation-friendly IDC/push-in terminals (combination terminals) or push-in terminals. The terminals are designed for use with solid conductors with cross-sections of 0.5 –1 mm² (combination terminals) or up to 1.5 mm² (push-in terminals) and are approved for current loads of up to 6 A (combination terminal) and 16 A (push-in terminal). The lead stripping length totals 7 – 9 mm for push-in terminals; leads do not need to be stripped for IDC terminals.
On request, many ballasts can also be provided with screw terminals (current load up to 16 A) for conductor cross-sections of 0.5 to 2.5 mm².

Notes on connection terminals on lampholders
Vossloh-Schwabe usually equips lampholders for T and TC lamps as well as starter lampholders with installation-friendly push-in terminals for solid conductors of 0.5 –1 mm². Most lampholders are fitted with twin push-in terminals and thus permit through-wiring. The required lead stripping length amounts to 8 – 9 mm for all types.

IDC terminals
In order to fully exploit the vast potential for rationalisation offered by automated wiring and testing with the ALF system, a totally new component family was developed that is equipped with the VDE-tested IDC terminal technology. This technology has already been used very successfully on a large scale in other branches of industry. This connection technology dispenses with the stripping of conductors that is required for the push-in, screw or crimping methods. The tried-and-tested IDC terminal technology has created the foundation for efficient automation as it ensures both high connection quality and rapid contacting. Components equipped in this fashion make it possible to through-wire several terminals with a single conductor. This constitutes a further economic advantage as it significantly reduces the required conductor lengths. Furthermore, this design principle makes it possible to use adapters to simply and reliably make electrical contact from above for a VDE-compatible final luminaire inspection.

ALF connection
Height: 12 mm

Release by twisitng and pulling the conductor at the same time

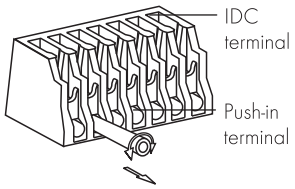

1. Insert release tool above the conductor
2. Pull out the conductor

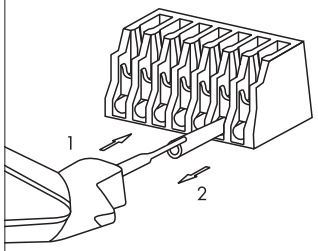

Stripping the conductor fpr push-in terminal 0.5 – 1 mm²: 8 – 9 mm

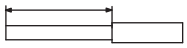

IDC/Push-in terminal for electromagnetic ballasts

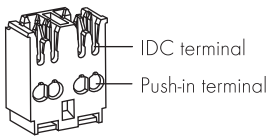

Stripping the conductor for push-in terminal 0.5 – 1 mm²: 7 – 9 mm

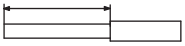

Lampholders for Fluorescent Lamps

Lampholders for compact fluorescent lamps
Vossloh-Schwabe produces the majority of lampholders for TC lamps using PBT, a thermoplastic material. This highly heat-resistant material is responsible for the T140 temperature rating. Leading lamp manufacturers also use PBT for the lamp bases they produce. This material harmonisation in conjunction with fatigue-free, stainless steel lamp mounting springs ensures a permanently secure lamp fit.

Lampholders for double-ended fluorescent lamps
VS lampholders for T lamps are characterised by a number of technical features that guarantee a high degree of reliability and safety. The heat-resistant PBT rotor with which most VS lampholders are fitted is a recognised trademark. In addition to the lampholders with the field-tested large rotor, VS also provides a new generation of lampholders featuring innovative "Rotoclic" rotor technology. This new VS technology constitutes a further milestone in the development of highly heat-resistant rotor systems.

Among the special features of this new technology is a T140 temperature rating thanks to a front plate made entirely of PBT as well as a clearly audible click when the lamp is inserted or replaced. As a result, the motion of turning the lamp from "replacement" to "operating" position is aided acoustically.

In addition to this, VS produces a further series of lampholders with a rotor-like function, whose front plates are also made of highly heat-resistant PBT and have similarly been given a T140 temperature rating.

The maximum permissible temperature at the back of all lampholders is T_m 110 °C. Another key feature common to all VS lampholders is a highly effective support for the lamp pin that reliably prevents any base pin deflection, even with older lamps, and guarantees a durable and firm contact.

Push-through lampholders
Push-through lampholders are inserted from below through a cut-out in the luminaire casing and are secured by lateral catches. This type of lampholder is frequently used in luminaires on which the lampholder remains visible from the outside, e.g. in so-called strip lighting. The electrical leads are laid beneath the sheet metal level. Luminaire directive EN 60598-1 Para. 8.2 must be observed with regard to the luminaire.

Push-fit lampholders
This lampholder type, which is frequently found in surface-mounted ceiling and built-in luminaires, is pushed into the luminaire casing from above. The lampholder foot should protrude by no more than 4 mm to match the usual height of the spacing cams in the luminaire casing. These lampholders are mostly wired above the luminaire casing to the side of the lampholder. However, there are also lampholders on which the wiring runs through the lampholder foot, with the leads laid beneath the luminaire casing.

Built-in lampholders
This design is also predominantly used for recessed ceiling and surface-mounted luminaires. However, unlike push-fit lampholders, built-in lampholders are usually fitted at the ends of the luminaire boxes. In addition to the usual fixing with split pins attached to the rear, there are also countless versions with fixing clips, push-fit studs or screw-in holes, which are also available with spring-loaded length compensation. Built-in lampholders offer luminaire designers a wealth of scope regarding the choice of lamp position in relation to the reflector. This enables great variation in light distribution as the lampholder does not dictate the distance of the centre of the lamp from the metal casing.

Surface-mounted lampholders
The fastening system of surface-mounted lampholders usually consists of screws or rivets above a fixing level, along which the wiring is also laid. As this type of installation is usually too costly nowadays for large unit numbers, these lampholders are used almost exclusively for special applications, e.g. displays or illuminated advertisements.

VS lampholders for the UL market and UL approved leads are available for all common lamp types. Further information can be found at www.unvlt.com.

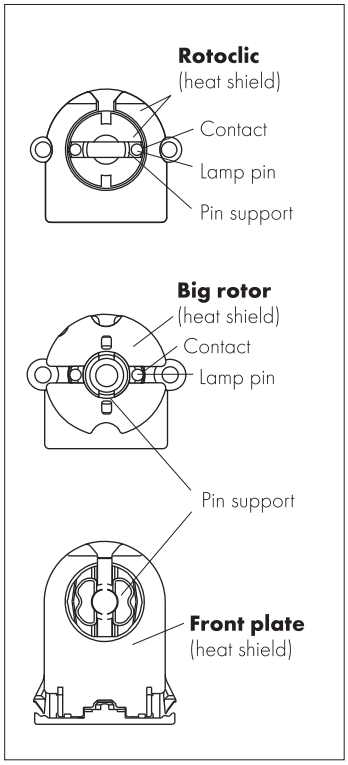

Push-through lampholder

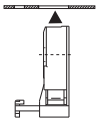

Push-fit lampholder

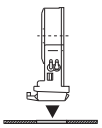

Built-in lampholder



Surface-mounted lampholder

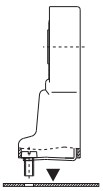

Lamp Table – Fluorescent Lamps

Lamp type/lamp base	Base	Output (W)	Max. length (C) acc. to IEC			
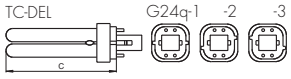	G24q-1	10 13	95 130			
	G24q-2	18	140			
	G24q-3	26	160			
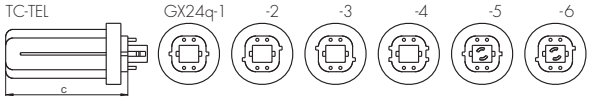	GX24q-1	13	90			
	GX24q-2	18	110			
	GX24q-3	26 32	130 145			
	GX24q-4	42	155			
	GX24q-5	57	191			
	GX24q-6	70	219			
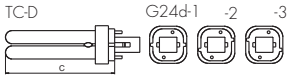	G24d-1	8 10 13	73* 95 130			
	G24d-2	18	140			
	G24d-3	26	160			
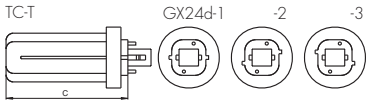	GX24d-1	13	90			
	GX24d-2	18	110			
	GX24d-3	26	130			
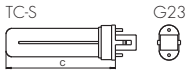	G23	5 7 9 11	85 115 145 215			
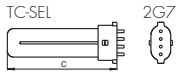	2G7	5 7 9 11	85 115 145 215			
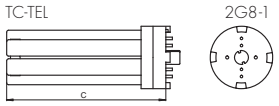	2G8-1	60 85 120	167 208 285			
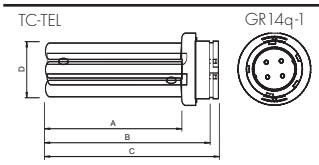			A	B	C	D
	GR14q-1	14 17	99.7 121.7	120 142	126.6 148.6	41* 41*
			A	B		
	GR8	16 28	138 205	141 207		
	GR10q	10 16 21 28 38	92 138 138 205 205	95 141 141 207 207		
	GRY10q-3	55	205	205*		
	GRZ10d	18	137	141*		
	GRZ10t	30	202	206*		
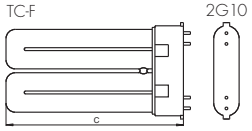	2G10	18 24 36	122 165 217			
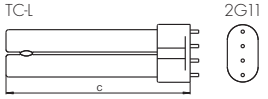	2G11	18 24 34 36 40 55 80	225 320 533* 415 535 535 565			

*not included in IEC standard (non-committal specifications)

Lamp Table – Fluorescent Lamps

Lamp type/lamp base	Base	Output (W)	Ø D (mm)	Length A/C (mm) acc. to IEC 60081/ 60901 (for circular lamps B)
GX53-1 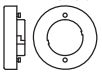	GX53-1	7 9		
T2 (T7) W4.3 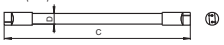	W4.3x8.5d	6 8 11 13	7 7 7 7	219.3 320.9 422.5 524.1
T5 (T16) G5 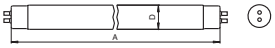	G5	4 6 8 13 14 20 21 24 25 28 32 34 35 39 45 49 50 54 73 80	16 16 16 16 16 16 16 16 16 16 16 16 16 16 16 16 16 16 16 16	135.9 212.1 288.3 516.9 549.0 549.0 849.0 549.0 1149.0 1149.0 1449.0 849.0 1449.0 849.0 1449.0 1449.0 1449.0 1149.0 1449.0 1449.0
T8 (T26) G13 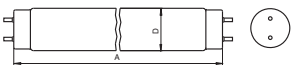	G13	10 14 15 16 16 18 20*1 23 30 32 33 34 36 36 38 50 51 58 70	26 26 26 26 26 26 26 26 26 26 26 26 26 26 26 26 26 26 26	470.0*2 360.0*2 437.4 589.8 720.0*2 589.8 438.0*2 970.0*2 894.6 1199.4 1149.0 1047.0*2 1199.4 970.0*2 1047.0 1500.0 1500.0 1500.0 1763.8
T12 (T38) G13 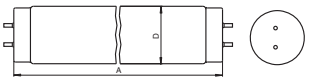	G13	20 25 30 40 65 75 80*1 85 85*1 100 100*1 115 125 140 140*1 160*1	38 38 38 38 38 38 38 38 38 38 38 38 38 38 38 38	589.8 970.0 894.6 1199.4 1500.0 1763.8 1500.0 2374.3 1763.8 2374.3 1800.0*2 1200.0*2 2374.3 1500.0*2 1800.0*2 1800.0*2

*1 UV solarium lamps
*2 Not included in IEC standard (non-committal specifications)

Lamp Table – Fluorescent Lamps

Lamp type/lamp base	Base	Output (W)	Ø D (mm)	A (mm)
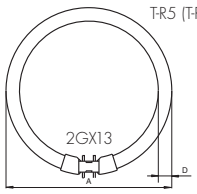	2GX13	22 40 55 60	16 16 16 16	230.0 305.0 305.0 379.0
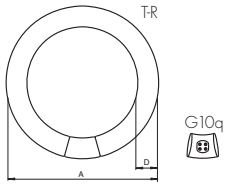	G10q	22 32 40 60	29 29 29 30	215.9 304.8 406.4 408.8*
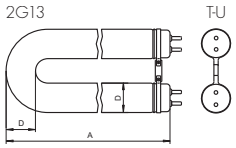	2G13-92	18 36 58	26 26 26	304* 566, 601* 566, 759*

* Not yet included in IEC standard (non-committal specifications)

Tube lengths of plastic and glass protective tube

Ø D (mm)	Length L (mm)
$38^{\pm 0.5}$	L = A – $20^{\pm 1}$
$50^{\pm 0.8}$	L = A – $30^{\pm 1}$

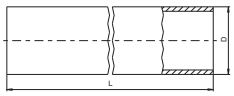

Energy efficiency classification

The commission's regulation (EC) No. 245/2009 dated 18 March 2009 implementing Directive 2005/32/EC of the European Parliament and of the Council with regard to defining ecodesign requirements for fluorescent lamps without integrated ballast, high-pressure discharge lamps and for ballasts and luminaires needed for their operation, and repealing Directive 2000/55/EC of the European Parliament and of the Council (official title), has created a legal framework in the EU that defines fundamental requirements for operating efficient lighting technology products.

Although the Regulation predominantly applies to general lighting, it is also product-orientated and thus independent of any specific application. The efficiency and performance requirements (specifications governing performance features) apply to fluorescent lamps without integrated ballast, high-pressure discharge lamps as well as ballasts and luminaires needed to operate these lamps. A brief overview of the requirements governing fluorescent lamps is provided in the following table (excerpt from the CELMA guide).

Stage	**Requirements governing**	
1 13.04.2010	**Ballasts**	• Non-dimmable ballasts: minimum EEI = B2 • Dimmable ballasts: minimum EEI = A1 • Standby losses ≤ 1 W • Non-dimmable ballasts for new lamps not designed for use with existing ballasts: minimum EEI = A3 • Ballasts must be labelled (for instance: EEI = A2)
Interim stage 13.09.2010	**Luminaires**	• Luminaire standby losses = sum of ballast limiting values (No. of installed ballasts) • After 18 months: technical information must be made available, both online and in luminaire documentation (for luminaires > 2,000 Lumens).
2 13.04.2012	**Ballasts**	• Standby losses ≤ 0.5 W
	Luminaires	• Luminaire standby losses = sum of ballast limiting values (No. of installed ballasts) • Luminaire designs must permit integration of 3rd-stage ballasts. Exceptions: luminaires > IP4X
at the latest by **13.04.2014**	**Revision of the regulation** Technological progress as well as the sum of the experience gained during the implementation of the Regulation will be taken into consideration during the revision process.	
3 13.04.2017	**Ballasts**	• New ballast limiting values calculated using specified formula (see page 378) • That constitutes a ban on EEI = A3, B1 and B2 ballasts (magnetic ballasts can only be produced for higher lamp ratings – permitted classes are A2, A2 BAT and only A1 BAT for dimmable ballasts) • Ballasts labels shortened to A2, A2 BAT or A1 BAT ("EEI =" will be dropped; this means labelled ballasts can be clearly dated.
	Luminaires	• All luminaire designs must permit the integration of 3rd-stage ballasts.

Energy efficiency classification

The following table taken from Regulation 245/2009/EC provides an overview of (1st- and 2nd-stage) ballast requirements, ordered according to efficiency values:

Lamp data					Ballast efficiency (P_{Lamp}/P_{Input}) (non-dimmable ballasts)				
Type	Nominal output W	ILCOS-Code	Typical rating 50 Hz W	HF W	A2 BAT %	A2 %	A3 %	B1 %	B2 %
T8	15	FD-15-E-G13-26/450	15	13.5	87.8	84.4	75.0	67.9	62.0
	18	FD-18-E-G13-26/600	18	16	87.7	84.2	76.2	71.3	65.8
	30	FD-30-E-G13-26/900	30	24	82.1	77.4	72.7	79.2	75.0
	36	FD-36-E-G13-26/1200	36	32	91.4	88.9	84.2	83.4	79.5
	38	FD-38-E-G13-26/1050	38.5	32	87.7	84.2	80.0	84.1	80.4
	58	FD-58-E-G13-26/1500	58	50	93.0	90.9	84.7	86.1	82.2
	70	FD-70-E-G13-26/1800	69.5	60	90.9	88.2	83.3	86.3	83.1
TC-L	18	FSD-18-E-2G11	18	16	87.7	84.2	76.2	71.3	65.8
	24	FSD-24-E-2G11	24	22	90.7	88.0	81.5	76.0	71.3
	36	FSD-36-E-2G11	36	32	91.4	88.9	84.2	83.4	79.5
TC-F	18	FSS-18-E-2G10	18	16	87.7	84.2	76.2	71.3	65.8
	24	FSS-24-E-2G10	24	22	90.7	88.0	81.5	76.0	71.3
	36	FSS-36-E-2G10	36	32	91.4	88.9	84.2	83.4	79.5
TC-D/ TC-DE	10	FSQ-10-E-G24q=1 FSQ-10-I-G24d=1	10	9.5	89.4	86.4	73.1	67.9	59.4
	13	FSQ-13-E-G24q=1 FSQ-13-I-G24d=1	13	12.5	91.7	89.3	78.1	72.6	65.0
	18	FSQ-18-E-G24q=2 FSQ-18-I-G24d=2	18	16.5	89.8	86.8	78.6	71.3	65.8
	26	FSQ-26-E-G24q=3 FSQ-26-I-G24d=3	26	24	91.4	88.9	82.8	77.2	72.6
TC-T/ TC-TE	13	FSM-13-E-GX24q=1 FSM-13-I-GX24d=1	13	12.5	91.7	89.3	78.1	72.6	65.0
	18	FSM-18-E-GX24q=2 FSM-18-I-GX24d=2	18	16.5	89.8	86.8	78.6	71.3	65.8
	26	FSM-26-E-GX24q=3 FSM-26-I-GX24d=3	26.5	24	91.4	88.9	82.8	77.5	73.0
TC-DD/ TC-DDE	10	FSS-10-E-GR10q FSS-10-L/P/H-GR10q	10.5	9.5	86.4	82.6	70.4	68.8	60.5
	16	FSS-16-E-GR10q FSS-16-I-GR10q FSS-10-L/P/H-GR10q	16	15	87.0	83.3	75.0	72.4	66.1
	21	FSS-21-E-GR10q FSS-21-I-GR10q FSS-21-L/P/H-GR10q	21	19	89.4	86.4	79.2	73.9	68.8
	28	FSS-28-E-GR10q FSS-28-I-GR10q FSS-28-L/P/L-GR10q	28	26	89.7	86.7	81.3	78.2	73.9
	38	FSS-38-E-GR10q FSS-38-L/P/L-GR10q	38.5	36	92.3	90.0	85.7	84.1	80.4
TC	5	FSD-5-I-G23 FSD-5-E-2G7	5.4	5	72.7	66.7	58.8	49.3	41.4
	7	FSD-7-I-G23 FSD-7-E-2G7	7.1	6.5	77.6	72.2	65.0	55.7	47.8
	9	FSD-9-I-G23 FSD-9-E-2G7	8.7	8	78.0	72.7	66.7	60.3	52.6
	11	FSD-11-I-G23 FSD-11-E-2G7	11.8	11	83.0	78.6	73.3	66.7	59.6
T5	4	FD-4-E-G5-16/150	4.5	3.6	64.9	58.1	50.0	45.0	37.2
	6	FD-6-E-G5-16/225	6	5.4	71.3	65.1	58.1	51.8	43.8
	8	FD-8-E-G5-16/300	7.1	7.5	69.9	63.6	58.6	48.9	42.7
	13	FD-13-E-G5-16/525	13	12.8	84.2	80.0	75.3	72.6	65.0
T9-C	22	FSC-22-E-G10q-29/200	22	19	89.4	86.4	79.2	74.6	69.7
	32	FSC-32-E-G10q-29/300	32	30	88.9	85.7	81.1	80.0	76.0
	40	FSC-40-E-G10q-29/400	40	32	89.5	86.5	82.1	82.6	79.2

Lamp types



T8

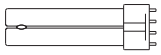

TC-L

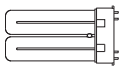

TC-F

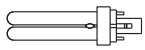

TC-D/TC-DE

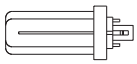

TC-T/TC-TE

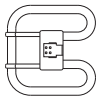

TC-DD/TC-DDE

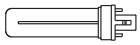

TC



T5

Lamp data					Ballast efficiency (P_{Lamp}/P_{Input}) (non-dimmable ballasts)				
Type	Nominal output W	ILCOS-Code	Typical rating 50 Hz W	HF W	A2 BAT %	A2 %	A3 %	B1 %	B2 %
T2	6	FDH-6-L/P-W4.3x8.5d-7/220		5	72.7	66.7	58.8	–	–
	8	FDH-8-L/P-W4.3x8.5d-7/320		7.8	76.5	70.9	65.0	–	–
	11	FDH-11-L/P-W4.3x8.5d-7/420		10.8	81.8	77.1	72.0	–	–
	13	FDH-13-L/P-W4.3x8.5d-7/520		13.3	84.7	80.6	76.0	–	–
	21	FDH-21-L/P-W4.3x8.5d-7		21	88.9	85.7	79.2	–	–
	23	FDH-23-L/P-W4.3x8.5d-7		23	89.8	86.8	80.7	–	–
T5-E	14	FDH-14-L/P-G5-16/550		13.7	84.7	80.6	72.1	–	–
	21	FDH-21-L/P-G5-16/850		20.7	89.3	86.3	79.6	–	–
	24	FDH-24-L/P-G5-16/550		22.5	89.6	86.5	80.4	–	–
	28	FDH-28-L/P-G5-16/1150		27.8	89.8	86.9	81.8	–	–
	35	FDH-35-L/P-G5-16/1450		34.7	91.5	89.0	82.6	–	–
	39	FDH-39-L/P-G5-16/850		38	91.0	88.4	82.6	–	–
	49	FDH-49-L/P-G5-16/1450		49.3	91.6	89.2	84.6	–	–
	54	FDH-54-L/P-G5-16/1150		53.8	92.0	89.7	85.4	–	–
	80	FDH-80-L/P-G5-16/1150		80	93.0	90.9	87.0	–	–
	95	FDH-95-L/P-G5-16/1150		95	92.7	90.5	84.1	–	–
	120	FDH-120-L/P-G5-16/1450		120	92.5	90.2	84.5	–	–
T5-C	22	FSCH-22-L/P-2GX13-16/225		22.3	88.1	84.8	78.8	–	–
	40	FSCH-40-L/P-2GX13-16/300		39.9	91.4	88.9	83.3	–	–
	55	FSCH-55-L/P-2GX13-16/300		55	92.4	90.2	84.6	–	–
	60	FSCH-60-L/P-2GX13-16/375		60	93.0	90.9	85.7	–	–
TC-LE	40	FSDH-40-L/P-2G11		40	91.4	88.9	83.3	–	–
	55	FSDH-55-L/P-2G11		55	92.4	90.2	84.6	–	–
	80	FSDH-80-L/P-2G11		80	93.0	90.9	87.0	–	–
TC-TE	32	FSMH-32-L/P-GX24q=3		32	91.4	88.9	82.1	–	–
	42	FSMH-42-L/P-GX24q=4		43	93.5	91.5	86.0	–	–
	57	FSM6H-57-L/P-GX24q=5 FSM8H-57-L/P-GX24q=5		56	91.4	88.9	83.6	–	–
	70	FSM6H-70-L/P-GX24q=6 FSM8H-70-L/P-GX24q=6		70	93.0	90.9	85.4	–	–
	60	FSM6H-60-L/P-2G8=1		63	92.3	90.0	84.0	–	–
	62	FSM8H-62-L/P-2G8=2		62	92.2	89.9	83.8	–	–
	82	FSM8H-82-L/P-2G8=2		82	92.4	90.1	83.7	–	–
	85	FSM6H-85-L/P-2G8=1		87	92.8	90.6	84.5	–	–
	120	FSM6H-120-L/P-2G8=1 FSM8H-120-L/P-2G8=1		122	92.6	90.4	84.7	–	–
TC-DD	55	FSSH-55-L/P-GR10q		55	92.4	90.2	84.6	–	–

Lamp types

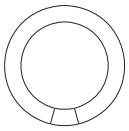

T9-C



T2



T5-E

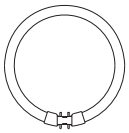

T5-C



TC-LE

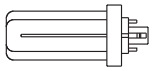

TC-TE

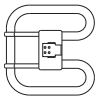

TC-DD

At the very latest, the following energy efficiency formula for ballasts will be introduced to coincide with the 3rd stage:

If $P_{Lamp} \leq 5$ W $\quad EBb_{FL} = 0.71$

If $5\ W < P_{Lamp} < 100$ W $\quad EBb_{FL} = P_{Lamp}/(2*sqrt(P_{Lamp}/36)+38/36*P_{Lamp}+1)$

If $P_{Lamp} \geq 100$ W $\quad EBb_{FL} = 0.91$

The following limiting values must be observed:

η Ballast	Energy efficiency classes
$\geq EBb_{FL}$	A2 and A1BAT
$\geq 1-0.75*(1-EBb_{FL})$	A2 BAT

The graph illustrates the difference between Classes A2, A1 BAT and A2 BAT (BAT = best available technology).

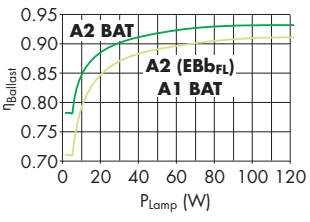

Key to lamp designations

TC-S	Tube Compact-Single
TC-SEL	Tube Compact-Single Electronic
TC-D	Tube Compact-Double
TC-DEL	Tube Compact-Double Electronic
TC-T	Tube Compact-Triple
TC-TEL	Tube Compact-Triple Electronic
TC-Q	Tube Compact-Quad
TC-QEL	Tube Compact-Quad Electronic
TC-DD	Tube Compact-Double D-Shape
TC-L	Tube Compact-Long
TC-F	Tube Compact-Flat
T2 (T7)	Tube Ø 2/8" (7 mm)
T5 (T16)	Tube Ø 5/8" (16 mm)
T8 (T26)	Tube Ø 8/8" (26 mm)
T12 (T38)	Tube Ø 12/8" (38 mm)
T-U	Tube, U-Shape
T-R	Tube, Ring-Shape
T-R5 (T-R16)	Tube, Ring-Shape Ø 5/8" (16 mm)

ELECTRONIC AND ELECTRO-MAGNETIC TRANSFORMERS





FOR LOW-VOLTAGE HALOGEN INCANDESCENT LAMPS

The operating voltage of low-voltage halogen lamps is normally 12 V (6 and 24 V are also used for special applications). As a result, transformers are required in order to connect such lamps to the normal mains supply within buildings, whereby international requirements governing building installations specify that safety transformers or converters (electronic transformers) be exclusively used for such purposes nowadays. These devices are designed in such a way as to prevent both personal injury and the outbreak of fire should the lighting system malfunction.

Electronic converters
The following chapter provides an overview of the VS range of electronic converters that feature a whole range of advantages: light and compact, superior efficiency (approx. 95%), short-circuit protection, integrated overheating and overload protection, soft start for longer lamp life, broad part-load range and dimmability.

Electromagnetic safety transformers
The following chapter also provides an overview of Vossloh- Schwabe's range of electromagnetic transformers. The range is split into protection class II transformers and protection class I built-in transformers whose ultra-flat design make them particularly user-friendly. Lamp brightness can be regulated using conventional phase dimmers for low-voltage halogen lamps.

5 Transformers for Low-voltage Halogen Incandescent Lamps

Independent electronic converters	**382–386**
With DALI interface	386
Electronic built-in converters	**387–389**
Potentiometer and dimmers	**390**
Electromagnetic safety transformers	**391–395**
Technical details for incandescent lamps	**457–471**
General technical details	533 - 540
Glossary	541 - 543

Independent Electronic Converters – LiteLine

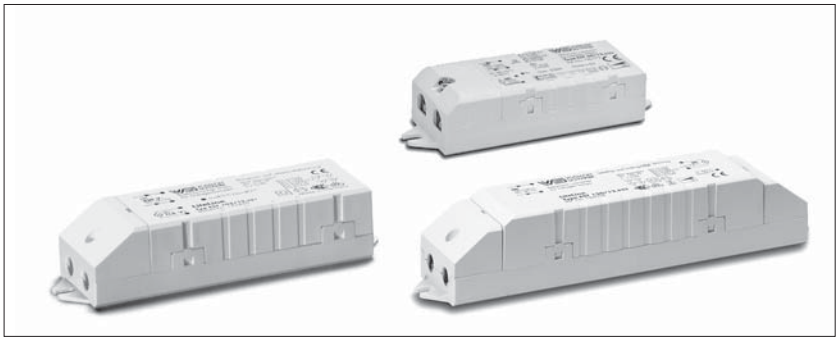

Electronic safety converters
for low-voltage halogen incandescent lamps 12 V
Casing: heat-resistant polyamide
Mains frequency: 50–60 Hz
Protection against "no load" operation
Protection against short-circuit:
electronic switch-off with automatic restart
Electronically controlled overload
and temperature protection
Suitable for installation in furniture
and on combustible surfaces
Power factor: > 0.95
Efficiency: ≥ 94%
Dimming: optional with phase-cutting leading-edge or phase-cutting trailing-edge dimmer (EST 35/12.650: only phase-cutting trailing-edge dimmer)
Screw terminals: 2.5 mm²
(EST 60/12.635 primary: 4 mm²)
Quantity of screw terminals:
1x2-poles primary
1x2-poles secondary
With integrated cord grip
Protection class II
SELV-equivalent
Degree of protection: IP20
RFI-suppressed

A

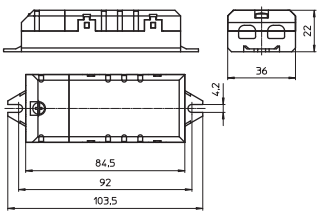

B

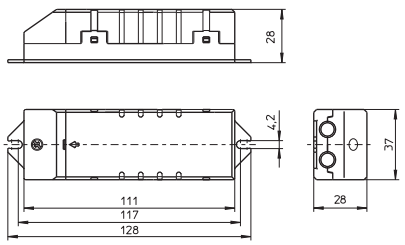

C

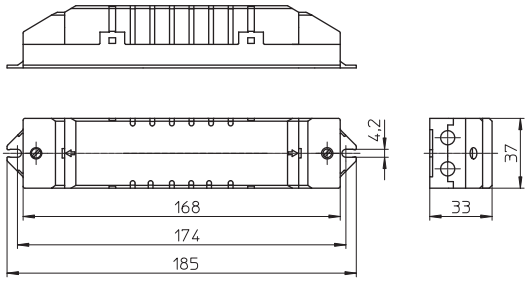

Type	Ref. No.	Capacity range (W)	Voltage (V) prim. (±10%)	sec.	Nominal current A	Ambient temperature t_a (°C)	Casing temperature t_c (°C)	Drawing	Weight g
Dimensions: 22x36x103.5 mm									
EST 60/12.635	**186173**	10–60	220–240	10.2–12	0.258–0.260	-20 to 45	max. 85	A	70
Dimensions: 28x37x128 mm									
EST 35/12.650	**186081**	5–35	230–240	11.4–11.8	0.152–0.158	-20 to 60	max. 70	B	80
EST 70/12.380	**186072**	20–70	230–240	11.3–11.7	0.30–0.31	-20 to 45	max. 70	B	85
EST 105/12.381	**186077**	20–105	230–240	11.2–11.7	0.435–0.445	-20 to 40	max. 85	B	95
Dimensions: 33x37x185 mm									
EST 150/12.622	**186098**	50–150	230–240	11.2–11.6	0.595–0.605	-20 to 45	max. 85	C	175

Independent, Super-thin Electronic Converters – FlatLine

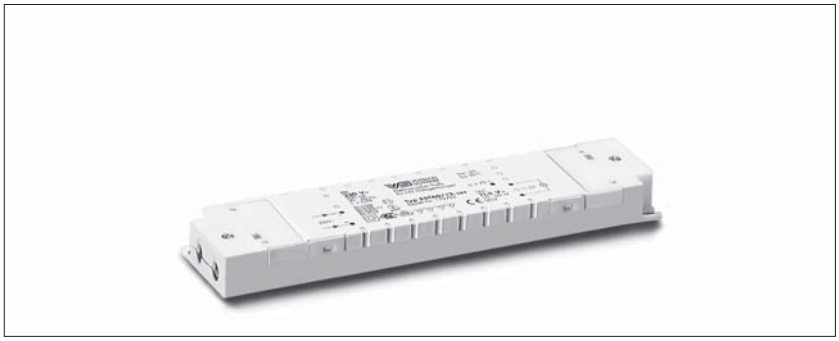

Electronic safety converters
for low-voltage halogen incandescent lamps 12 V
Casing: heat-resistant polyamide
Mains frequency: 50–60 Hz
Protection against "no load" operation
Protection against short-circuit:
electronic switch-off with automatic restart
Electronically controlled overload
and temperature protection
Suitable for installation in furniture
and on combustible surfaces
Power factor: 0.98
Efficiency: 95%
Dimming: with phase-cutting trailing-edge dimmer
Screw terminals: 2.5 mm²
Quantity of screw terminals:
- 1x2-poles primary
- 1x2-poles secondary

With integrated cord grip
Protection class II
SELV
Degree of protection: IP20
RFI-suppressed

A

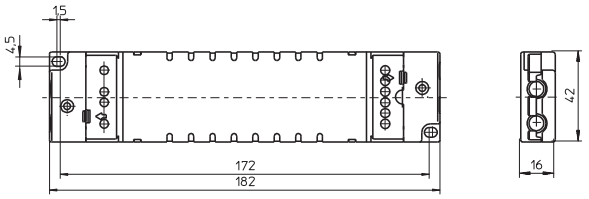

B

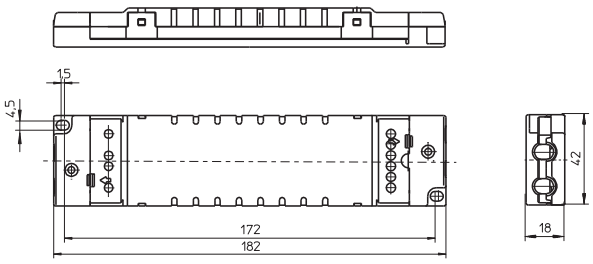

Type	Ref. No.	Capacity range W	Voltage (V) prim. (±10%)	sec.	Nominal current (A)	Ambient temperature t_a (°C)	Casing temperature t_c (°C)	Drawing	Weight g
Dimensions: 16x42x182 mm									
EST 60/12.388	**179792**	10–60	230	11.5	0.25	–20 to 50	max. 70	A	100
Dimensions: 18x42x182 mm									
EST 120/12.389	**179793**	20–120	230	11.5	0.50	–20 to 40	max. 70	B	125

Independent Electronic Converters – TopLine

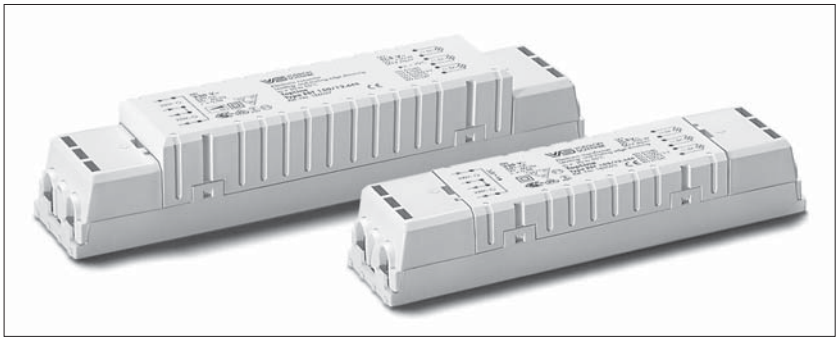

Electronic safety converters for
low-voltage halogen incandescent lamps 12 V
Casing: heat-resistant polyamide
Mains frequency: 50–60 Hz
Protection against "no load" operation
Protection against short-circuit:
electronic switch-off with automatic restart
Electronically controlled overload
and temperature protection
Suitable for installation in furniture
and on combustible surfaces
Power factor: ≥ 0.98
Efficiency: ≥ 94%
Dimming: optional with phase-cutting leading-edge or phase-cutting trailing-edge dimmer
Screw terminals: 2.5 mm²
(EST 200/12.649: 4 mm²)
Quantity of screw terminals:
2 x 2-poles primary
3 x 2-poles secondary
With integrated cord grip
Protection class II
SELV-equivalent
Degree of protection: IP20
RFI-suppressed
Time saving mounting due to click-in endcaps

A

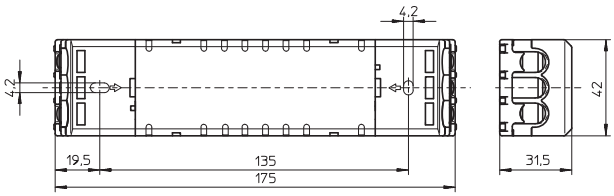

B

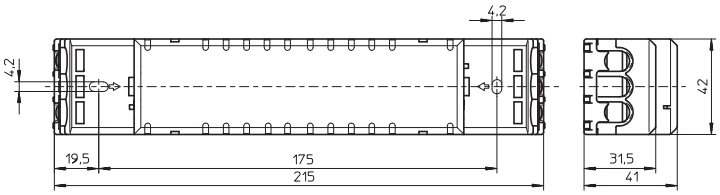

Type	Ref. No.	Capacity range (W)	Voltage (V) prim. (±10%)	sec.	Nominal current A	Ambient temperature t_a (°C)	Casing temperature t_c (°C)	Drawing	Weight g
Dimensions: 31.5x42x175 mm									
EST 70/12.643	**186117**	20–70	230–240	11.3–11.8	0.305–0.310	–20 to 55	max. 75	A	145
EST 105/12.644	**186118**	20–105	230–240	11.3–11.8	0.430–0.440	–20 to 55	max. 75	A	165
Dimensions: 41x42x215 mm									
EST 150/12.645	**186119**	50–150	230–240	11.3–11.9	0.615–0.630	–20 to 55	max. 75	B	230
EST 200/12.649	**186068**	35–200	230/240	11.3/11.7	0.81/0.86	–20 to 45	max. 70	B	280

Independent Electronic Converters – DiscLine

Electronic safety converters
for low-voltage halogen incandescent lamps 12 V
Casing: heat-resistant polycarbonate
Mains frequency: 50–60 Hz
Protection against "no load" operation
Protection against short-circuit:
electronic switch-off with automatic restart
Thermal cut-out with automatic reset
Suitable for installation in furniture
and on combustible surfaces
Power factor: 0.98
Efficiency: 95%
Dimming: with phase-cutting trailing-edge dimmer
Primary lead: 2x0.75 mm²,
PVC-insulation, length: 100^{+30} mm
Secondary lead: 0.75 mm²,
PVC-insulation, length: 150 mm
Secondary lead length: max. 2 m
Protection class II
SELV
Degree of protection: IP20
RFI-suppressed

A

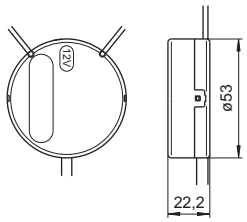

B

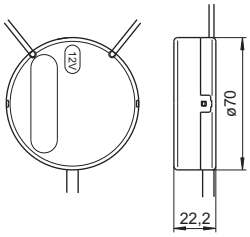





Type	Ref. No.	Capacity range W	Voltage (V) prim. (±10%)	sec.	Nominal current A	Ambient temperature t_a (°C)	Casing temperature t_c (°C)	Drawing	Weight g
Dimensions: Ø 53x22.2 mm									
EST 70/12.601	**186005**	20–70	230	11.5	0.30	-20 to 35	max. 75	A	70
Dimensions: Ø 70x22.2 mm									
EST 105/12.602	**186007**	35–105	230	11.5	0.43	-20 to 35	max. 70	B	100

Dimmable Independent Electronic Converters



Electronic safety converters
for low-voltage halogen incandescent lamps 12 V
Casing: heat-resistant polyamide
Dimming range:
approx. 1–100% of lamp power
DALI: poles are not polarity sensitive (protected if connected to mains voltage), for use with DALI compatible control units
Low standby power consumption (< 1 W)
Mains frequency: 50–60 Hz
Protection against "no load" operation
Protection against short-circuit:
electronic switch-off with automatic restart
Electronically controlled overload
and temperature protection
Suitable for installation in furniture
and on combustible surfaces
Power factor: 0.98 at 100% operation
Efficiency: 94%
Screw terminals: 2.5 mm²
Quantity of screw terminals:
1x2-poles primary
1x2-poles DALI
2x2-poles secondary
(ESTd 150/12.661: 3x2-poles secondary)
With integrated cord grip
Protection class II
SELV-equivalent
Degree of protection: IP20
RFI-suppressed

A

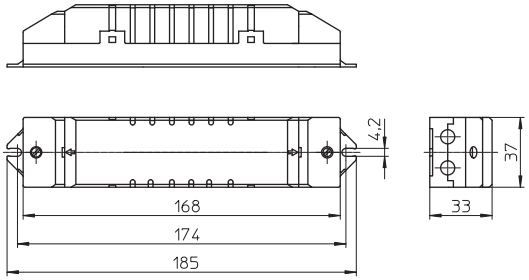

B

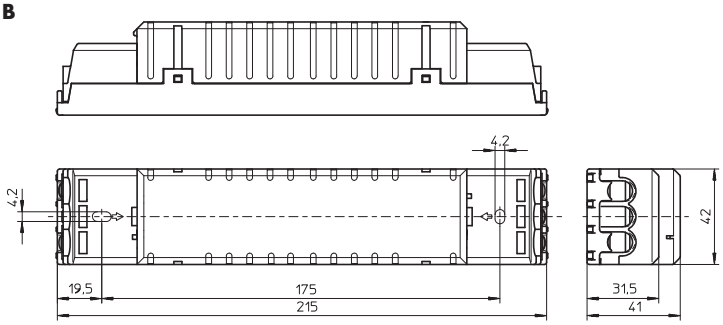

Type	Ref. No.	Capacity range (W)	Voltage (V) prim. (±10%)	sec.	Nominal current A	Ambient temperature t_a (°C)	Casing temperature t_c (°C)	Drawing	Weight g
Dimensions: 33x37x185 mm									
ESTd 70/12.660	**186115**	20–70	230–240	11.3–11.8	0.299–0.306	–20 to 50	70	A	110
ESTd 105/12.662	**186121**	20–105	230–240	11.2–11.7	0.440–0.455	–20 to 45	75	A	130
Dimensions: 41x42x215 mm									
ESTd 150/12.661	**186116**	50–150	230–240	11.2–11.6	0.595–0.605	–20 to 45	70	B	230

Electronic Built-in Converters – CapLine

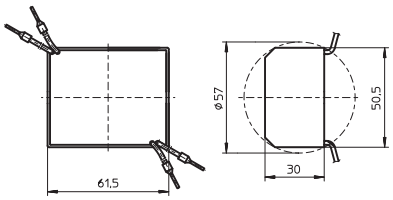



Electronic built-in safety converters
for low-voltage halogen incandescent lamps 12 V
Casing: heat-resistant polyamide,
encapsulated with polyester resin
For installation in plaster depth boxes:
Ø 60 mm, height 65 mm
Dimensions: 30x50.5x61.5 mm
Mains frequency: 50–60 Hz
Protection against "no load" operation
Primary and secondary leads:
stranded conductors 1 mm², Si-insulation,
Ø external: 2 mm, length: 170 mm
Protection against short-circuit:
electronic switch-off with automatic restart
Thermal cut-out with automatic reset
Suitable for installation in furniture
and on combustible surfaces
Power factor: 0.98
Efficiency: 94%
Dimming: with phase-cutting trailing-edge dimmer
SELV
Degree of protection: IP54
RFI-suppressed

Type	**Ref. No.**	Capacity range (W)	Voltage (V) prim. (±10%)	sec.	Nominal current (A)	Ambient temperature t_a °C	Casing temperature t_c °C	Weight g
EST 75/12G.302	**162400**	20-75	230	11.5	0.32	-20 to 60	max. 85	200

Electronic Built-in Converters – BoardLine

Electronic built-in safety converters
for low-voltage halogen incandescent lamps 12 V
Mains frequency: 50–60 Hz
Protection against "no load" operation
Protection against short-circuit:
electronic switch-off with automatic restart
Thermal cut-out with automatic reset
(EST 70/12.380 and EST 105/12.381:
electronically controlled overload
and temperature protection)
Power factor: 0.98
Dimming: optional with phase-cutting leading-edge or phase-cutting trailing-edge dimmer
(EST 60/12.304: only phase-cutting trailing-edge dimmer)
Screw terminals: 2.5 mm²
(EST 60/12.304 screw terminals: 4 mm²)
Fixing hole: Ø 4 mm (EST 60/12.304)
SELV-equivalent
RFI-suppressed

A

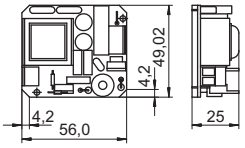

B

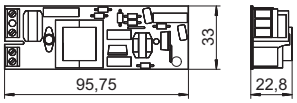



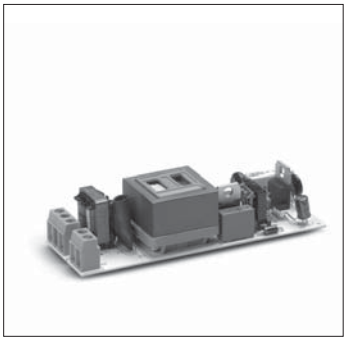

Electronic converter									Maximum temperature		
Type	**Ref. No.**	Capacity range W	Voltage (V) prim. (±10%)	sec.	Nominal current A	Efficiency %	Drawing	Weight g	Power transistor t/t_{an} (°C)	Transformer t/t_{an} (°C)	Y-Capacitor t/t_{an} (°C)
Dimensions: 25x49x56 mm											
EST 60/12.304	**162396**	20–60	230	11.5	0.26	94	A	70	90/110	110/120	< 110/110
Dimensions: 23x33x96 mm											
EST 70/12.380	**186074**	20–70	230–240	11.3–11.7	0.30–0.31	95	B	65	95/105	95/115	< 100/110
EST 105/12.381	**186079**	20–105	230–240	11.3–11.7	0.43–0.44	95	B	75	115/125	130/150	< 105/115

Electronic Built-in Converters – TwinLine

With potentiometer connection (3.3 MΩ ±10%)

Electronic safety built-in converters
for low-voltage halogen incandescent lamps 12 V
Casing: heat-resistant polyamide
Mains frequency: 50–60 Hz
Protection against "no load" operation
Protection against short-circuit:
electronic switch-off with automatic restart
Thermal cut-out with automatic reset
Suitable for installation in furniture
and on combustible surfaces
Power factor: 0.98
Efficiency: ≥ 94%
Dimming: potentiometer (3.3 MΩ ±10%)
or phase-cutting trailing-edge dimmer
Screw terminals: 4 mm²
Quantity of screw terminals:
1x2-poles primary
1x2-poles secondary
1x2-poles potentiometer connection
Fastening: male nipple M8
SELV (70 W)
SELV-equivalent (105 W)
Degree of protection: IP20
RFI-suppressed

A

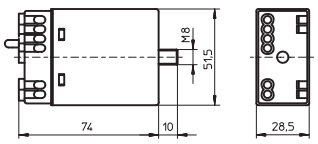

B

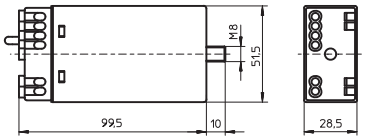





Type	Ref. No.	Capacity range W	Voltage (V) prim. (±10%)	Voltage (V) sec.	Nominal current A	Ambient temperature t_a °C	Casing temperature t_c °C	Drawing	Weight g
Dimensions: 28.5x51.5x74 mm									
EST 70/12.618	**186032**	20–70	230–240	11.3–11.8	0.30–0.31	–20 to 45	max. 70/70 W max. 75/60 W max. 80/20–50 W	A	105
Dimensions: 28.5x51.5x99.5 mm									
EST 105/12.619	**186033**	20–105	230–240	11.3–11.7	0.43–0.44	–20 to 45	max. 75	B	140

Potentiometer

For brightness control of low-voltage
halogen incandescent lamps with electronic
built-in safety transformers with potentiometer
connection (3.3 MΩ ±10%)
Pressure or rotary switch
for switching on/off and brightness regulation
Soldered leads: stranded conductors 0.75 mm², Si-insulation, Ø external: 2 mm, length: 150 mm
Weight: 15 g
Unit: 14 pcs.
Ref. No.: 186050

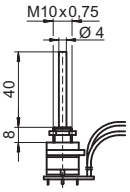



Dimmers for Electronic Converters

Phase-cutting trailing-edge dimmer
Dimmer without cover plate
Dimensions: 67x67x51 mm
Push-button change-over switch with stud 4 mm,
for installation in flushtype boxes with Ø 55 mm
Output: 10–350 W
Weight: 60 g
Unit: 25 pcs.
Ref. No.: 172773

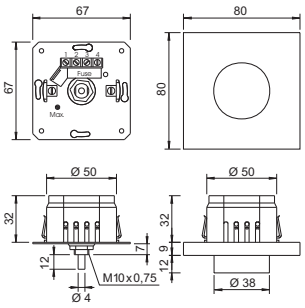

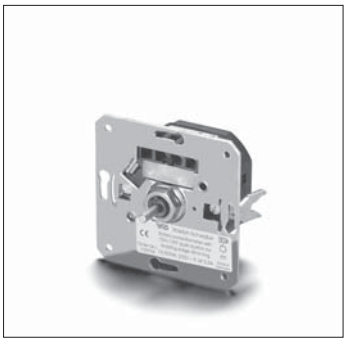

Phase-cutting leading-edge dimmer
Dimmer without cover plate
Dimensions: 67x67x51 mm
Push-button change-over switch with stud 4 mm,
for installation in flushtype boxes with Ø 55 mm
Output: 15–500 W
Weight: 60 g
Unit: 25 pcs.
Ref. No.: 172774

Cover plate with rotary knob
Dimensions: 80x80x9 mm
Colour: white
Weight: 30 g
Unit: 10 pcs.
Ref. No.: 172775

Super-thin Electromagnetic Built-in Transformers

Shape: 28 x 41 mm

Electromagnetic safety transformers
for low-voltage halogen incandescent lamps 12 V
Vacuum-impregnated with polyester resin
Screw terminals: 0.5–2.5 mm²
Protection class I
For these transformers without thermal cut-out, a slow-acting fuse should be installed in the wiring on site

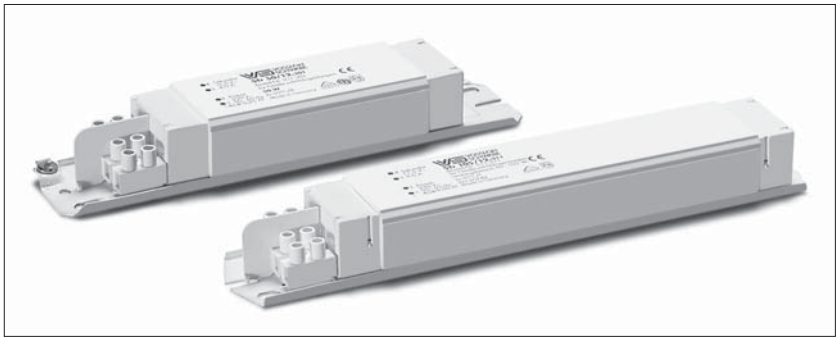

A

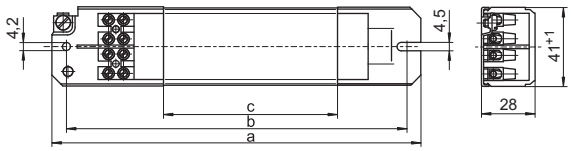

B

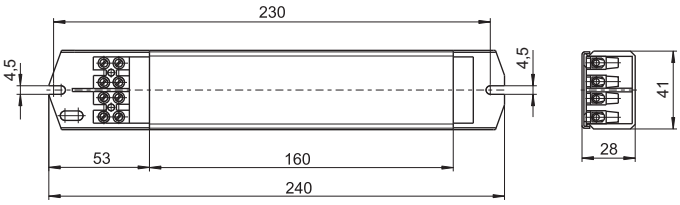

Safety transformers											Primary fuse
Type	**Ref. No.**	Capacity range W	50, 60 Hz V prim.	V sec.	Ambient temperature t_a (°C)	Drawing	a mm	b mm	c mm	Weight kg	AT
220 V/50, 60 Hz											
new STr 50/12.207	**500843**	35–50	220	11.5	40/B	A	175	165	83	0.73	0.250
230 V/50, 60 Hz											
STr 20/12.306	**161781**	15–20	230	11.5	60/B	A	155	140	63	0.55	0.125
STr 50/12.301	**161757**	35–50	230	11.5	50/B	A	195	180	92	0.80	0.250
STr 50/12.342	**507181**	35–50	230	11.5	40/B	A	175	165	83	0.73	0.250
STr 60/12.338	**179604**	40–60	230	11.5	50/F	A	195	180	92	0.80	0.315
STr 105/12.311	**170002**	60–105	230	11.5	30/F	B	240	230	160	1.33	0.500
240 V/50, 60 Hz											
STr 50/12.401	**169830**	35–50	240	11.5	45/B	A	195	180	92	0.80	0.250
STr 50/12.422	**502592**	35–50	240	11.5	40/B	A	175	165	83	0.73	0.250
STr 105/12.406	**169125**	60–105	240	11.5	50/H	B	240	230	160	1.33	0.500
127 V/60 Hz											
STr 50/12.109	**525791**	35–50	127	11.5	40/F	A	155	140	63	0.55	0.500

Super-thin Electromagnetic Built-in Transformers with Thermal Cut-out

Shape: 28 x 41 mm

Electromagnetic safety transformers
for low-voltage halogen incandescent lamps 12 V
Vacuum-impregnated with polyester resin
Screw terminals: 0.5–2.5 mm²
Protection class I
Temperature switch with self-holding protection against overheating,
no primary fuse necessary

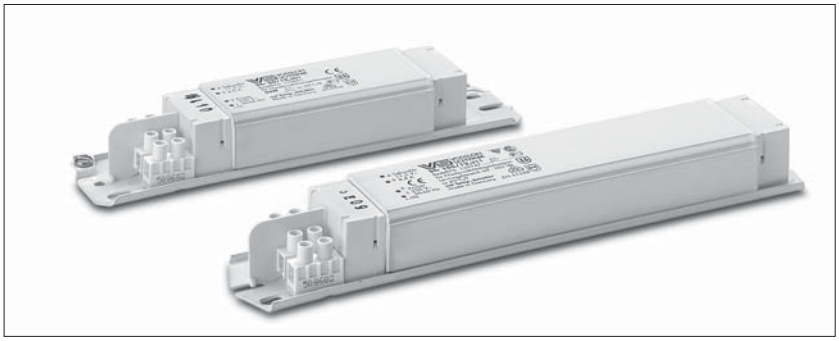

A

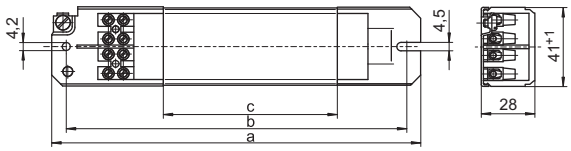

B

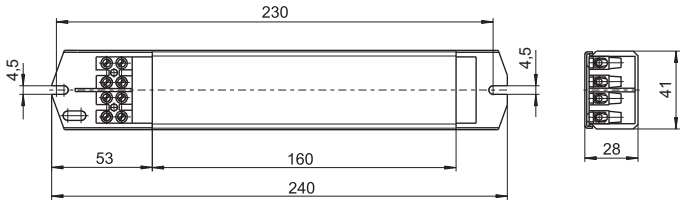

Type	Ref. No.	Capacity range W	50, 60 Hz V prim.	V sec.	Ambient temperature t_a (°C)	Drawing	a mm	b mm	c mm	Weight kg
230 V/50, 60 Hz										
STr 20/12.306	**161860**	15–20	230	11.5	60/B	A	155	140	63	0.55
STr 50/12.337	**179444**	35–50	230	11.5	50/F	A	175	165	83	0.73
STr 50/12.301	**170091**	35–50	230	11.5	50/B	A	195	180	92	0.80
STr 60/12.338	**179608**	40–60	230	11.5	50/F	A	195	180	92	0.80
STr 105/12.311	**169747**	60–105	230	11.5	45/F	B	240	230	160	1.33
240 V/50, 60 Hz										
STr 50/12.401	**169748**	35–50	240	11.5	45/B	A	195	180	92	0.80
STr 105/12.406	**161935**	60–105	240	11.5	50/H	B	240	230	160	1.33
127 V/60 Hz										
STr 50/12.109	**537403**	35–50	127	11.5	40/F	A	155	140	63	0.55

Electromagnetic Built-in Transformers, Protection Class II

Shape: 38 x 49.6 mm

Electromagnetic safety transformers
for low-voltage halogen incandescent lamps 12 V
Casing: polycarbonate
encapsulated with PUR electrical resin
With self-holding thermal cut-out
Screw terminals: 2.5 mm²
With integrated cord grip
Suitable for installation in furniture
and on combustible surfaces
Degree of protection: IP20

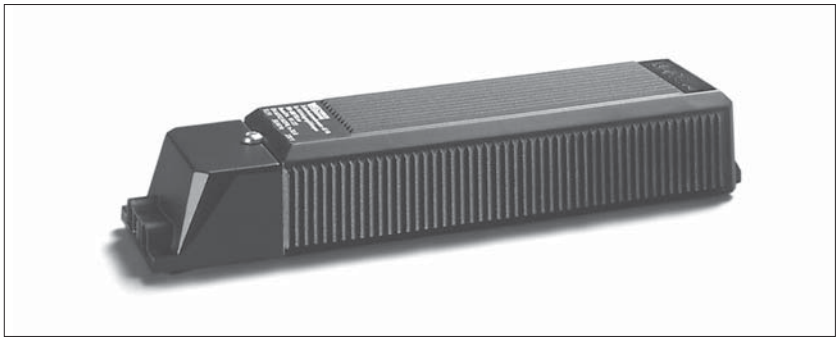

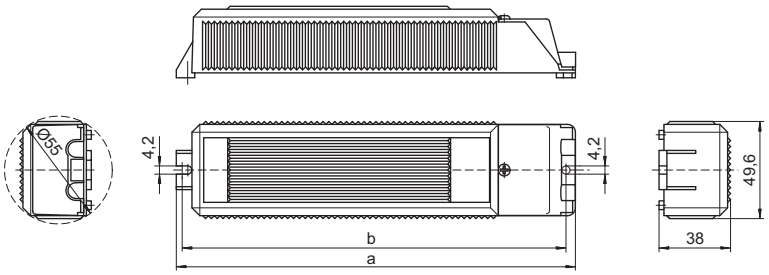

Type	Ref. No.	Capacity range W	50, 60 Hz V prim.	V sec.	Ambient temperature t_a (°C)	a mm	b mm	Weight kg
STr 50/12G.301	**161827**	35–50	230	11.5	30/B	204	196	0.90
STr 60/12G.303	**161830**	40–60	230	11.5	30/B	204	196	1.10
STr 100/12G.311	**161816**	60–105	230	11.5	25/B	255	245	1.50

Compact Electromagnetic Transformers 70–300 W

Shape: 96 x 70 mm



Built-in electromagnetic safety transformers
for low-voltage halogen incandescent lamps 12 V
Fully encapsulated transformer in a plastic casing
Mains frequency: 50–60 Hz
Built-in primary fuse and temperature switch
Screw terminals:
primary 0.75–2.5 mm²
secondary up to 10 mm²
Degree of protection: IP20
Protection class II
Suitable for installation in furniture
and on combustible surfaces

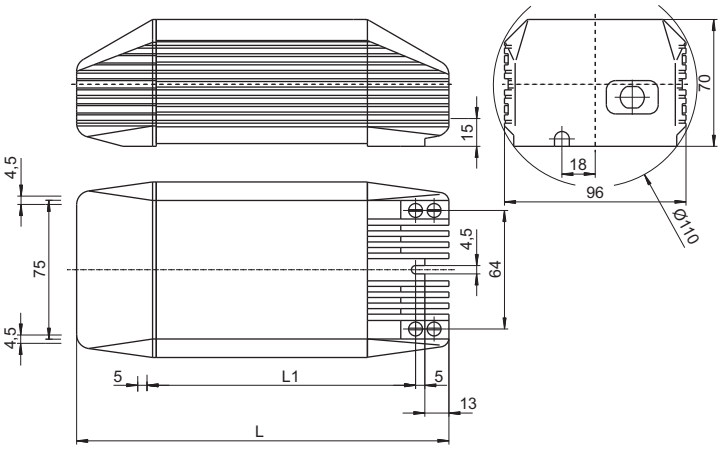

Circuit diagram

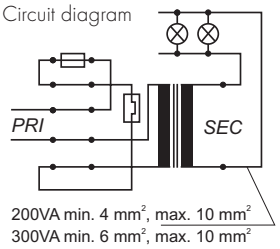

Type	Ref. No.	Capacity range	Voltage AC V -10%+6%		Ambient temperature t_a	L	L1	Weight
		W	prim.	sec.	°C	mm	mm	kg
230 V/50, 60 Hz								
STr 200/12.02	**531101**	70–200	230	12	40	200	145	3.3
STr 300/12.13	**531102**	150–300	230	12	40	230	175	4.6
240 V/50, 60 Hz								
STr 300/12.50	**531109**	150–300	240	12	40	230	175	4.6

Compact Electromagnetic Transformers 70–400 W

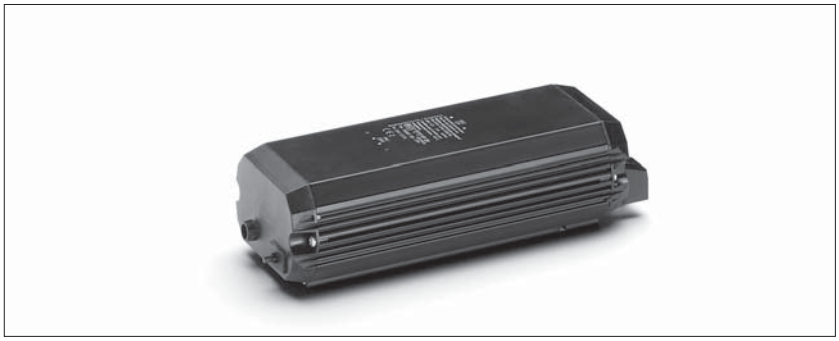

Dimensions: 110 x 77 mm

Built-in electromagnetic safety transformers for low-voltage halogen incandescent lamps 12 V and 24 V
Fully encapsulated transformer in an aluminium casing
Mains frequency: 50–60 Hz
Built-in reversible device protection and temperature switch
Screw terminals:
primary 0.75–2.5 mm²
secondary up to 10 mm²
Degree of protection: IP20
Protection class II
Suitable for installation in furniture and on combustible surfaces
Simple installation thanks to mounting aid

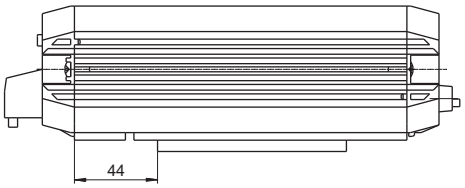

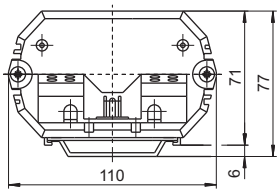

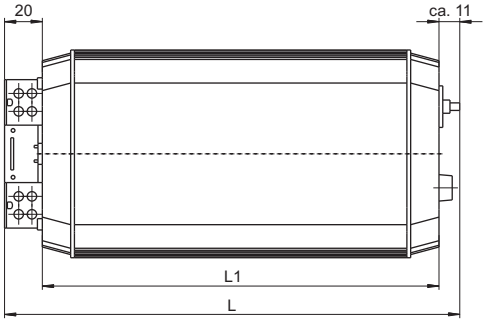

Circuit diagram

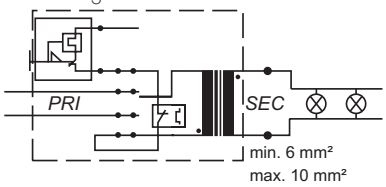

Type	Ref. No.	Capacity range W	Voltage AC V -10%+6% prim.	sec.	Ambient temperature t_a °C	L mm	L1 mm	Casing colour	Weight kg
STr 200/12.05	**531091**	70–200	230	12	45	195	165	black	3.6
STr 200/12.01	**531098**	70–200	230	12	45	195	165	white	3.6
STr 200/24.20	**531093**	70–200	230	24	45	195	165	black	3.6
STr 300/12.11	**531092**	150–300	230	12	35	240	210	black	5.4
STr 300/12.12	**531099**	150–300	230	12	35	240	210	white	5.4
STr 300/24.01	**531094**	150–300	230	24	35	240	210	black	5.4
STr 400/12.01	**531090**	250–400	230	12	25	290	260	black	5.7
STr 400/12.02	**531097**	250–400	230	12	25	290	260	white	5.7

LOW- AND MAINS VOLTAGE LAMPHOLDERS





LAMPHOLDERS FOR HALOGEN INCANDESCENT LAMPS

As the tungsten-halogen cycle and the high lamp current can cause very high temperatures when operating low-voltage halogen lamps, close attention must be paid to the luminaire's thermal conditions and components must be made of high-grade materials.

VS lampholders for low-voltage halogen lamps
The following chapter contains Vossloh-Schwabe's comprehensive range of connection elements, lampholders and accessories for safe and reliable installation in accordance with the latest regulations and developments.

VS lampholders for mains voltage halogen lamps
The following chapter contains Vossloh-Schwabe's comprehensive range of lampholders for single-ended halogen lamps (GU/GZ10 and G9 bases), lampholders for bayonet lamps (B15d and B22d bases) as well as lampholders for double-ended tubular lamps (R7s base).

5 Lampholders for Halogen Incandescent Lamps

Lampholders for low-voltage halogen incandescent lamps **398–407**
G4, GZ4, G5.3, GX5.3, G6.35, GY6.35 lampholders, accessories 398–399
G4 lampholders, GZ4 lamp connectors 400–402
Lampholders with separate mounting spring for GU4 lamps 402–403
GX5.3 lamp connectors 403–404
GU5.3 lampholders 404
Lampholders with separate mounting spring for GU5.3 lamps 405–406
G6.35, GY6.35 lampholders, GZ6.35 lamp connectors 406
G53 lamp connectors 407
B15d, BA15d lampholders 407

Lampholders for mains voltage halogen incandescent lamps **407–417**
B15d, BA15d lampholders 407
G9 lampholders, accessories 408–410
GU10, GZ10 lampholders, accessories 410–412
R7s thermoplastic lampholders 412
R7s ceramic lampholders 412–414
R7s metal lampholders 415
Connection boxes 416
Connectors 417

Technical details for incandescent lamps **457–471**
General technical details 533–540
Glossary 541–543

G4, GZ4, G5.3, GX5.3, G6.35, GY6.35 Lampholders, Accessories

For low-voltage halogen incandescent lamps

The lampholders listed in this chapter permit the use of lamps with different bases. It is important to ensure that under no circumstances a lamp with a smaller pin diameter is used if a lamp with a larger pin diameter has already been used.

G/GZ4, G/GX5.3, G/GY6.35 lampholder
Casing: LCP, natural, T270
Nominal rating: 8/24 (for G4/GZ4 lamps: 4/24)
Multipoint contacts: CuNiZn
Push-in terminals for stranded conductors with ferrule on bare end of core Ø 1.4–1.8 mm
Fixing holes for screws M3
Weight: 2.4 g, unit: 1000 pcs.
Type: 33300
Ref. No.: 109547

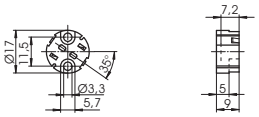



Cover caps
For push-fit onto lampholders type 333
External thread 20.8x2
Material: LCP, natural
Moulded thread: M10x1
Weight: 3.8 g, unit: 1000 pcs.
Type: 97255
Ref. No.: 109548

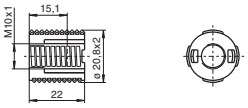



Screw rings
For components with external thread 20.8x2
Weight: 1.7/1.4 g, unit: 1000 pcs.
Type: 97257
Ref. No.: 109550 PPS, black
Ref. No.: 507490 LCP, natural

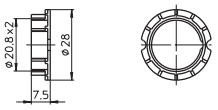



G/GZ4, G/GX5.3, G/GY6.35 lampholder
Casing: LCP, natural, T270
Nominal rating: 8/24 (for G4/GZ4 lamps: 4/24)
Multipoint contacts: CuNiZn
Push-in terminals for stranded conductors with ferrule on bare end of core Ø 1.4–1.8 mm
Fixing holes for screws M3
Weight: 2.6 g, unit: 1000 pcs.
Type: 33400
Ref. No.: 109674

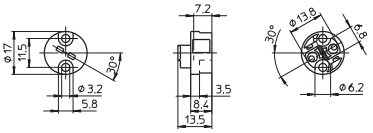



G/GZ4, G/GX5.3, G/GY6.35 lampholder
Casing: steatite, T270
Nominal rating: 8/24 (for G4/GZ4 lamps: 4/24)
Multipoint contacts: CuNiZn
Push-in terminals for stranded conductors
with ferrule on bare end of core Ø 1.4–1.8 mm
Fixing holes for screws M4
Weight: 3.4 g, unit: 1000 pcs.
Type: 32210
Ref. No.: 543530

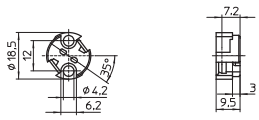



G/GZ4, G/GX5.3, G/GY6.35 lampholder
Casing: ceramic, cover plate: mica
T350
Nominal rating: 10/24
Contacts: Ni
Leads: Cu nickel-plated, stranded conductors
0.75 mm², PTFE-insulation, length: 140 mm
Fixing holes for screws M3
Weight: 6.8 g, unit: 500 pcs.
Type: 32400
Ref. No.: 100939

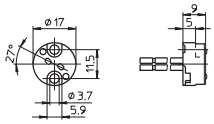



G/GZ4, G/GX5.3, G/GY6.35 lampholder
Casing: ceramic, cover plate: mica
T300
Nominal rating: 10/24
Multipoint contacts: CuNiZn
Leads: Cu nickel-plated, stranded conductors
0.75 mm², PTFE-insulation, length: 140 mm
Fixing holes for screws M3
Weight: 7.1 g, unit: 1000 pcs.
Type: 32700
Ref. No.: 101258

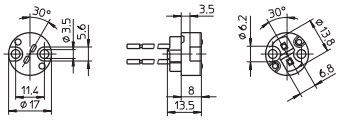



G/GZ4, G/GX5.3, G/GY6.35 lampholder
Casing: ceramic, cover plate: mica
T300, nominal rating: 10/24
Multipoint contacts: CuNiZn
Leads: Cu nickel-plated, stranded conductors
0.75 mm², PTFE-insulation, length: 140 mm
Fixing plate: zinc-coated polished steel
Fixing holes for screws M3
Weight: 8.8 g, unit: 1000 pcs.
Type: 32720
Ref. No.: 101274

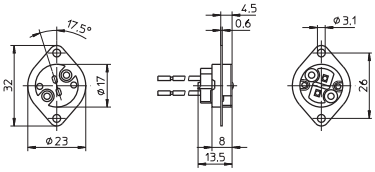



G/GZ4, G/GX5.3, G/GY6.35 lampholder
Casing: ceramic, cover plate: mica
T300, nominal rating: 10/24
Multipoint contacts: CuNiZn
Leads: Cu nickel-plated, stranded conductors
0.75 mm², PTFE-insulation, length: 140 mm
Fixing bracket: zinc-coated polished steel
Fixing holes for screws M3
Weight: 9.3 g, unit: 1000 pcs.
Type: 32730
Ref. No.: 101275

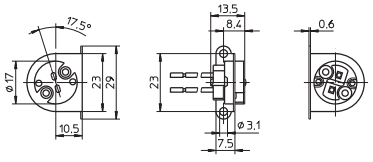



G4 Lampholders, GZ4 Lamp Connectors

For low-voltage halogen incandescent lamps

G4 lampholder, GZ4 lamp connector
Casing: PPS, black, T240
Nominal rating: 4/24, multipoint contacts: steel
Leads: Cu tinned, stranded conductors 0.75 mm², Si-insulation, length: 140 mm
Option for lateral wiring
Lampholder height: 16 mm
Fixing holes for screws M3
Weight: 5.7 g, unit: 1000 pcs.
Type: 30400
Ref. No.: 530024

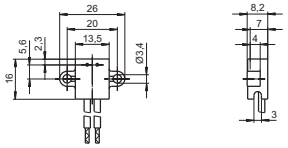

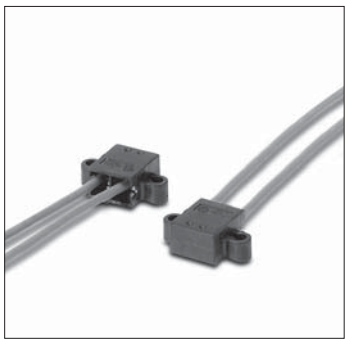

G4 lampholder, GZ4 lamp connector
Casing: PPS, black, T240
Nominal rating: 4/24, multipoint contacts: steel
Leads: Cu tinned, stranded conductors 0.75 mm², Si-insulation, length: 140 mm
Lampholder height: 12.8 mm
Fixing holes for screws M3
Weight: 5.5 g, unit: 1000 pcs.
Type: 30450
Ref. No.: 530025

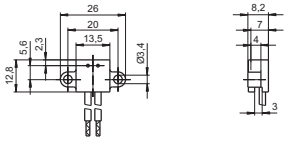



G4 lampholder, GZ4 lamp connector
Casing: PPS, black, T240
Nominal rating: 4/24, multipoint contacts: steel
Leads: Cu tinned, stranded conductors 0.75 mm², Si-insulation, length: 140 mm
Option for lateral wiring
Lampholder height: 16 mm
For push-fit onto the lamp
Weight: 5.3 g, unit: 1000 pcs.
Type: 30460
Ref. No.: 530026

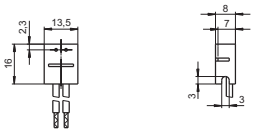

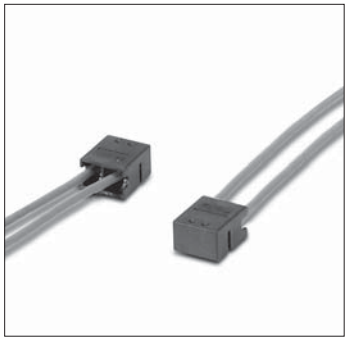

G4 lampholder, GZ4 lamp connector
Casing: PPS, black, T240
Nominal rating: 4/24, multipoint contacts: steel
Leads: Cu tinned, stranded conductors 0.75 mm², Si-insulation, length: 140 mm
Option for lateral and base wiring
Lampholder height: 12.8 mm
For push-fit onto the lamp
Weight: 5.1 g, unit: 1000 pcs.
Type: 30465
Ref. No.: 530027

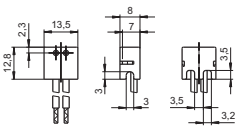



G4 lampholders
For push-fit into lampholder support 535267
T240
Nominal rating: 2/50
Multipoint contacts: CuNiZn
Push-in terminals for stranded conductors
with ferrule on bare end of core Ø 1.4–1.8 mm
Weight: 1.5/1.6 g, unit: 1000 pcs.
Type: 30800
Ref. No.: 535146 material: LCP
Ref. No.: 535263 material: PPS

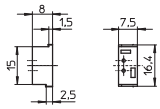



Lampholder support for G4 lampholders type 30800
Material: polyamide
Base split pins for wall thickness 0.6 mm
Weight: 0.8 g, unit: 500 pcs.
Type: 95300
Ref. No.: 535267

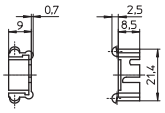



G4 lampholders
Casing: PPS, black, T200
Nominal rating: 2/24
Contacts: Ni
Push-in terminals for stranded conductors
with ferrule on bare end of core max. Ø 1.8 mm
Weight: 4.4/5 g, unit: 1000 pcs.
Type: 32800 holes for screws M3
Ref. No.: 106248
Type: 32820 threaded bushes M3
Ref. No.: 106249

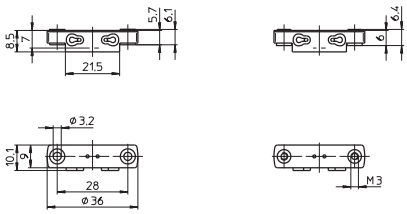



G4 lampholder
Casing: PPS, black, T200
Nominal rating: 2/24
Multipoint contacts: CuNiZn
Leads: Cu tinned, stranded conductors 0.75 mm²,
Si-insulation brown/blue, length: 140 mm
Push-in fixing
Weight: 4.4 g, unit: 1000 pcs.
Type: 30485
Ref. No.: 535988





G4 clip-in tube lampholder
With earth contact
Casing: PPS, black, T200
Nominal rating: 2/24
Multipoint contacts: CuNiZn
Lead: Cu tinned, stranded conductors 0.75 mm²,
Si-insulation blue, length: 140 mm
Push-in fixing
Weight: 2.7 g, unit: 1000 pcs.
Type: 30471
Ref. No.: 108449





G4 clip-in tube lampholder
With integrated cable holder for Teflon conductor
Casing: PPS, black, T200
Nominal rating: 2/24
Multipoint contacts: CuNiZn
Leads: Cu tinned, stranded conductors 0.61 mm², FEP-insulation brown/blue, length: 140 mm
Push-in fixing
Weight: 8.1 g, unit: 1000 pcs.
Type: 30470
Ref. No.: 520865

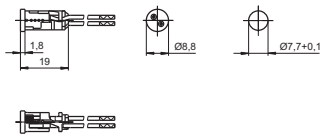



G4 lampholder
Casing: PPS, black, T240
Nominal rating: 4/24
Multipoint contacts: steel
Leads: Cu tinned, stranded conductors 0.75 mm², Si-insulation, length: 140 mm
For push-fit onto the lamp
Weight: 4.7 g, unit: 1000 pcs.
Type: 34000
Ref. No.: 507105

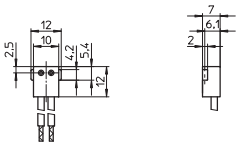

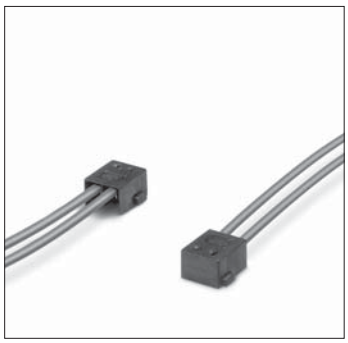

Lampholders with Separate Mounting Spring for GU4 Lamps

For low-voltage halogen incandescent lamps

G/GZ4, G/GX5.3, G/GY6.35 lampholder
Casing: LCP, natural, T270
Nominal rating: 8/24 (for G4/GZ4 lamps: 4/24)
Multipoint contacts: CuNiZn
Push-in terminals for stranded conductors with ferrule on bare end of core Ø 1.4–1.8 mm
Fixing holes for screws M3
For cover cap (see p. 398)
Weight: 2.4 g, unit: 1000 pcs.
Type: 33300
Ref. No.: 109547

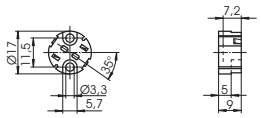



G/GZ4, G/GX5.3, G/GY6.35 lampholder
Casing: steatite, T270
Nominal rating: 8/24 (for G4/GZ4 lamps: 4/24)
Multipoint contacts: CuNiZn
Push-in terminals for stranded conductors with ferrule on bare end of core Ø 1.4–1.8 mm
Fixing holes for screws M4
Weight: 3.4 g, unit: 1000 pcs.
Type: 32210
Ref. No.: 543530

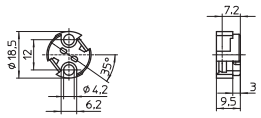



GU4 mounting spring for lamp
Material: stainless steel
For push-fit onto lampholders type 333 and 32210
Weight: 0.8 g, unit: 1000 pcs.
Type: 94095
Ref. No.: 109553

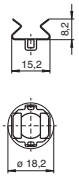



G/GZ4-, G/GX5.3, G/GY6.35 lampholder
Casing: ceramic, cover plate: mica
T350
Nominal rating: 10/24
Contacts: Ni
Leads: Cu nickel-plated, stranded conductors
0.75 mm², PTFE-insulation, length: 140 mm
Fixing holes for screws M3
Weight: 6.8 g, unit: 500 pcs.
Type: 32400
Ref. No.: 100939

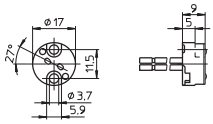



GU4 mounting spring for lamp
Material: stainless steel
The mounting spring has to be fastened
to the lampholder 100939.
The luminaire manufacturer is responsible
for the attachment.
Weight: 1.6 g, unit: 1000 pcs.
Type: 94071
Ref. No.: 108678

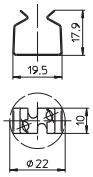



GX5.3 Lamp Connectors

For low-voltage halogen incandescent lamps

GX5.3 lamp connector
Casing: ceramic, cover plate: mica
T300, nominal rating: 10/24
Multipoint contacts: Ni
Leads: Cu nickel-plated, stranded conductors
1 mm², PTFE-insulation, length: 145 mm
Fixing holes for screws M3
Weight: 13.3 g, unit: 1000 pcs.
Type: 32020
Ref. No.: 400548

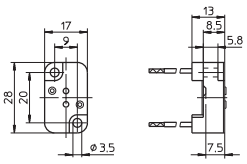

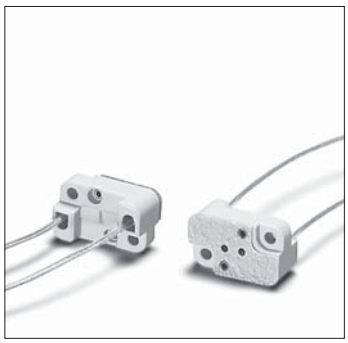

GX5.3 lamp connector
Casing: ceramic, cover plate: mica
T300, nominal rating: 10/24
Multipoint contacts: Ni
Leads: Cu nickel-plated, stranded conductors
0.75 mm², PTFE-insulation, length: 135 mm
Weight: 12 g, unit: 500 pcs.
Type: 32100
Ref. No.: 100877

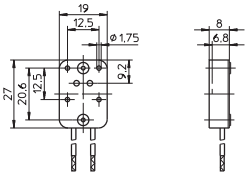

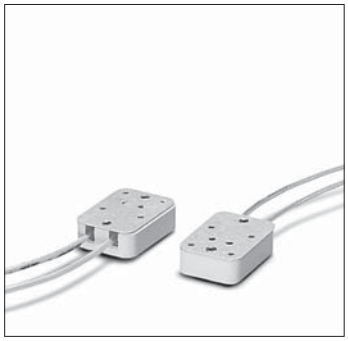

GX5.3 lamp connectors
Casing: ceramic, cover plate: mica
T300, nominal rating: 10/24
Multipoint contacts: Ni
Leads: Cu nickel-plated, stranded conductors
0.75 mm², PTFE-insulation, length: 140 mm
Weight: 7.8/8.5 g, unit: 500 pcs.
Type: 32600 holes for screws M3
Ref. No.: 101162
Type: 32620 threaded bushes M3
Ref. No.: 101207

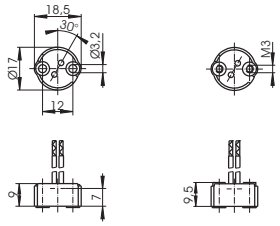



GU5.3 Lampholders

For low-voltage halogen incandescent lamps

GU5.3 lampholder
Casing: ceramic, cover plate: mica
T350, nominal rating: 10/24
Contacts: Ni
Leads: Cu nickel-plated, stranded conductors
0.75 mm², PTFE-insulation, length: 140 mm
Fixing holes for screws ST2.9
Mounting spring for lamp: stainless steel
Weight: 9.1 g, unit: 1000 pcs.
Type: 32480
Ref. No.: 106457

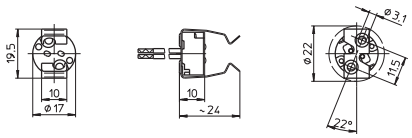

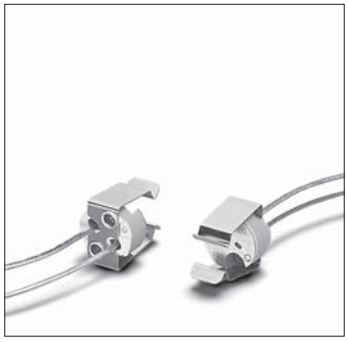

GU5.3 lampholders
Casing: ceramic, cover plate: mica
T300, nominal rating: 10/24, multipoint contacts: Ni
Leads: Cu nickel-plated, stranded conductors
0.75 mm², PTFE-insulation, length: 140 mm
Mounting spring for lamp: stainless steel
Weight: 11/12 g, unit: 500 pcs.
Type: 32680 holes for screws M3
Ref. No.: 101248
Type: 32690 threaded bushes M3
Ref. No.: 101253

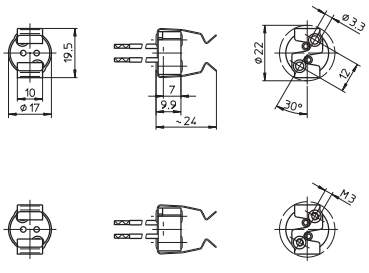



Lampholders with Separate Mounting Spring for GU5.3 Lamps

For low-voltage halogen incandescent lamps

G/GZ4, G/GX5.3, G/GY6.35 lampholder
Casing: LCP, natural, T270
Nominal rating: 8/24 (for G4/GZ4 lamps: 4/24)
Multipoint contacts: CuNiZn
Push-in terminals for stranded conductors
with ferrule on bare end of core Ø 1.4–1.8 mm
Fixing holes for screws M3
For cover cap (see p. 398)
Weight: 2.4 g, unit: 1000 pcs.
Type: 33300
Ref. No.: 109547

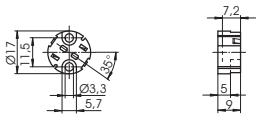



G/GZ4, G/GX5.3, G/GY6.35 lampholder
Casing: steatite, T270
Nominal rating: 8/24 (for G4/GZ4 lamps: 4/24)
Multipoint contacts: CuNiZn
Push-in terminals for stranded conductors
with ferrule on bare end of core Ø 1.4–1.8 mm
Fixing holes for screws M4
Weight: 3.4 g, unit: 1000 pcs.
Type: 32210
Ref. No. 543530

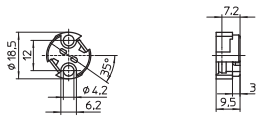



GU5.3 mounting spring for lamp
Material: stainless steel
For push-fit onto lampholders type 333 and 32210
Weight: 1.1 g, unit: 1000 pcs.
Type: 94096
Ref. No.: 109554

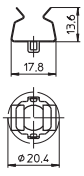



G/GZ4, G/GX5.3, G/GY6.35 lampholder
Casing: ceramic, cover plate: mica
T350
Nominal rating: 10/24
Contacts: Ni
Leads: Cu nickel-plated, stranded conductors
0.75 mm², PTFE-insulation, length: 140 mm
Fixing holes for screws M3
Weight: 6.8 g, unit: 500 pcs.
Type: 32400
Ref. No.: 100939

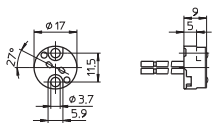



GU5.3 mounting spring for lamp
Material: stainless steel
The mounting spring has to be fastened to the lampholder 100939.
The luminaire manufacturer is responsible for the attachment.
Weight: 2 g, unit: 1000 pcs.
Type: 94060
Ref. No.: 106256

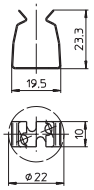



G6.35, GY6.35 Lampholders, GZ6.35 Lamp Connectors

For low-voltage halogen incandescent lamps

G/GY6.35 lampholder, GZ6.35 lamp connector
Casing: ceramic, cover plate: mica
T300, nominal rating: 10/24
Multipoint contacts: Ni
Leads: Cu nickel-plated, stranded conductors
0.75 mm², PTFE-insulation, length: 140 mm
Fixing holes for screws M3
Lamp fixing holes: diagonal
Weight: 11 g, unit: 500 pcs.
Type: 30300
Ref. No.: 100662

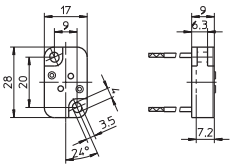



G/GY6.35 lampholder, GZ6.35 lamp connector
Casing: ceramic, cover plate: mica
T300, nominal rating: 10/24
Multipoint contacts: Ni
Leads: Cu nickel-plated, stranded conductors
0.75 mm², PTFE-insulation, length: 140 mm
Fixing holes for screws M3
Lamp fixing holes: axial
Weight: 12 g, unit: 500 pcs.
Type: 30350
Ref. No.: 108674

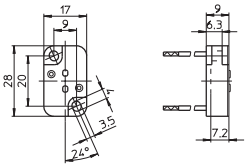



G53 Lamp Connectors

For low-voltage halogen incandescent lamps

G53 lamp connector
Casing: PPS, black
Nominal rating: 10/24
Contacts: CuNiZn
Lead: Cu tinned, stranded conductors 0.75 mm², Si-insulation, length: 140 mm

Fixing hole for screw M4
Lead exit: lateral
Weight: 4.4 g, unit: 1000 pcs.
Type: 33100
Ref. No.: 107694

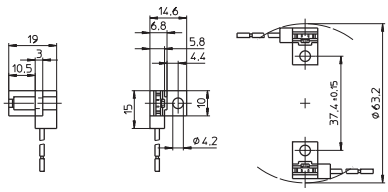

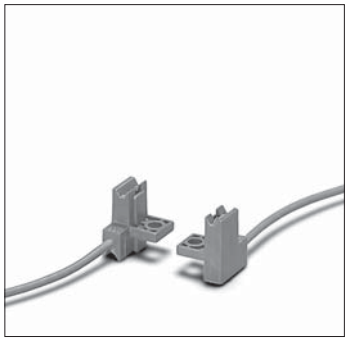

B15d, BA15d Lampholders

For low-voltage and mains voltage halogen incandescent lamps

One-piece contact pins with screw terminals to reduce voltage drop.
When using lampholders without cap it has to be ensured protection from electric shock as well as sufficient creepage distances and clearances from live parts on the back of lampholders.

B15d, BA15d lampholders
Casing with fixing flange: zinc-coated polished steel
Insert: ceramic, T230
Nominal rating: 8/250
Fixing holes for screws M3
Weight: 15/16 g, unit: 500 pcs.
Type: 78100
Ref. No.: 102923
Type: 78101 with earth terminal
Ref. No.: 102925

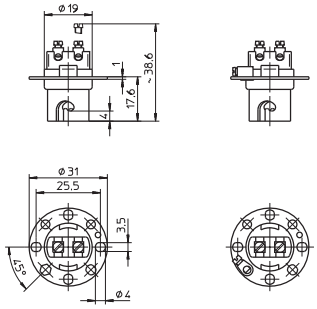



B15d, BA15d lampholder
Casing: zinc-coated polished steel
Insert: ceramic, T230, nominal rating: 8/250
With earth terminal
Cover cap: PBT GF, max. 180 °C
External thread 28x2 IEC 60399
For E14 metal screw rings
Weight: 17/11.5 g, unit: 500 pcs.
Type: 78201
Ref. No.: 106513 insert
Ref. No.: 106583 cap M10x1

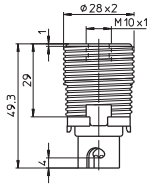



G9 Lampholders, Accessories

For mains voltage halogen incandescent lamps

For luminaires of protection class II

G9 lampholder
Casing: ceramic, cover plate: LCP, natural
T300, nominal rating: 2/250
Push-in twin terminals for stranded conductors
with ferrule on bare end of core Ø 1.4–1.8 mm
Weight: 7.5 g, unit: 1000 pcs.
Type: 33800
Ref. No.: 509357

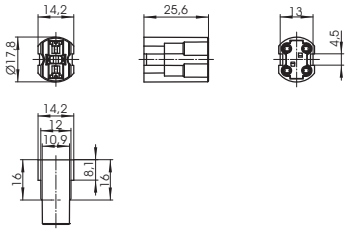



G9 lampholder
Casing: ceramic, T300, nominal rating: 2/250
Leads: Cu nickel-plated, stranded conductors
0.75 mm², double PTFE-insulation,
length: 180 mm
Weight: 12.8 g, unit: 1000 pcs.
Type: 33906
Ref. No.: 532610

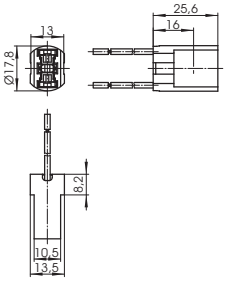



Metal bracket with nipple
For G9 lampholders type 338/339
Material: zinc-coated steel
Female nipple: M10x1
Weight: 7.8 g, unit: 1000 pcs.
Type: 94455
Ref. No.: 520880

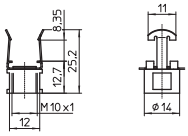



Metal brackets
For G9 lampholders type 338/339
Material: zinc-coated steel
Fixing holes for screws M3
Weight: 1.5/3.5 g, unit: 1000 pcs.
Type: 94457
Ref. No.: 520882
Type: 80280 with bracket 90°
Ref. No.: 521010

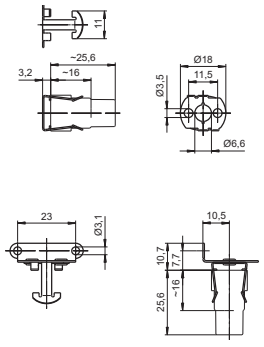



Cover cap for G9 lampholders type 338/339
Material: LCP
External thread 20.8 x 2
Moulded thread: M10 x 1
Weight: 3.2 g, unit: 1000 pcs.
Type: 97760
Ref. No.: 525583

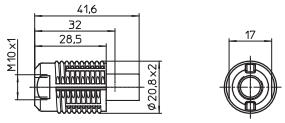



G9 lampholder with external thread 20.8 x 2
Casing: steatite, T300
Nominal rating: 2/250
For luminaires of protection class II
Push-in twin terminals for stranded conductors
with ferrule on bare end of core Ø 1.5–1.8 mm
Fixing holes for screws M3
Weight: 14.5 g, unit: 500 pcs.
Type: 33890
new **Ref. No.: 535610**

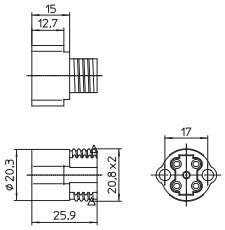



G9 lampholders with external thread 20.8 x 2
Casing: LCP, nominal rating: 2/250
Push-in terminals for stranded conductors
with ferrule on bare end of core Ø 1.4–1.8 mm
Fixing holes for screws M2.5
Bayonet fixing for cover caps
Weight: 8.6/8.2/6 g, unit: 1000 pcs.
Type: 33700/33710
Ref. No.: 506398 insert: ceramic, natural, T300
Ref. No.: 507470 insert: ceramic, natural, T270
Ref. No.: 508306 insert: LCP, natural, T270

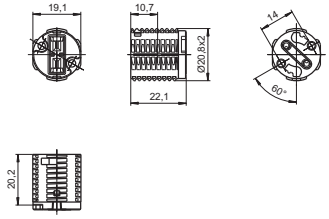



Screw rings
For components with external thread 20.8 x 2
Weight: 1.7/1.4 g, unit: 1000 pcs.
Type: 97257
Ref. No.: 109550 PPS, black
Ref. No.: 507490 LCP, natural

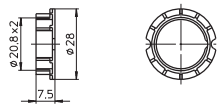



Metal screw rings
For components with external thread 20.8 x 2
Material: zinc-coated polished steel
Weight: 1.6/2 g, unit: 1000 pcs.
Type: 93034 Ø 27 mm, height: 7 mm
Ref. No.: 509110
Type: 93035 Ø 27 mm, height: 11 mm
Ref. No.: 509118

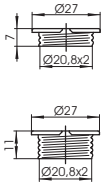



G9 lampholder
Casing: ceramic, cover plate: LCP, natural
T270, nominal rating: 2/250
Push-in twin terminals for stranded conductors
with ferrule on bare end of core Ø 1.4–1.8 mm
Fixing holes for screws M3
Weight: 14.4 g, unit: 1000 pcs.
Type: 33500
Ref. No.: 502004

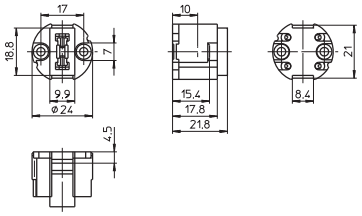



Cover caps for G9 lampholder 502004
Material: LCP, natural
External thread 28x2 IEC 60399
Fixing holes for screws M3
Weight: 8.7/4.6 g, unit: 1000 pcs.
Type: 83310 female nipple: M10x1
Ref. No.: 505951
Type: 97268 moulded thread: M10x1
Ref. No.: 501942

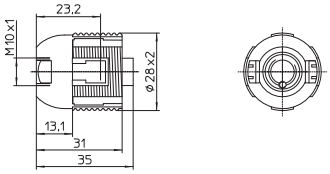



Screw ring
For components with external thread 28x2
Material: PPS, black
Ø 34 mm, height: 7.5 mm
Weight: 1.9 g, unit: 1000 pcs.
Type: 05202
Ref. No.: 502503

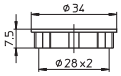



GU10, GZ10 Lampholders, Accessories

For mains voltage halogen incandescent lamps

GU10, GZ10 lampholders
Casing: LCP, natural, T270, nominal rating: 2/250
Push-in twin terminals for stranded conductors
with ferrule on bare end of core Ø 1.4–1.8 mm
Fixing holes for screws M3
Weight: 7 g, unit: 1000 pcs.
Type: 31000/31010
Ref. No.: 108979 GU10, GZ10 lampholder
Ref. No.: 109007 GU10 lampholder

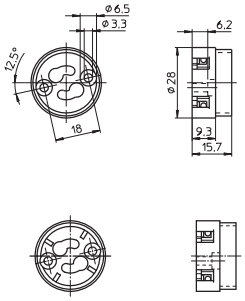



GU10, GZ10 lampholders
For luminaires of protection class II
Casing: LCP, natural, T270, nominal rating: 2/250
Push-in twin terminals for stranded conductors
with ferrule on bare end of core Ø 1.4–1.8 mm
Fixing holes for screws M3
Weight: 8 g, unit: 1000 pcs.
Type: 31020/31030
Ref. No.: 502111 GU10, GZ10 lampholder
Ref. No.: 502112 GU10 lampholder

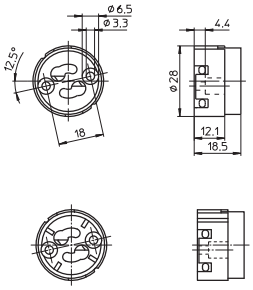



Cover cap for GU10, GZ10 lampholders type 310
Material: PA GF, black
Moulded thread: M10x1
Fixing holes for screws M3
Weight: 3.4 g, unit: 1000 pcs.
Type: 97244
Ref. No.: 109411

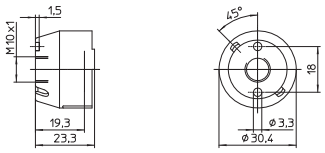



Cover cap for lampholders 502111/502112
External thread 32x2
Material: LCP, natural
Moulded thread: M10x1
Weight: 6 g, unit: 1000 pcs.
Type: 97320
Ref. No.: 502064

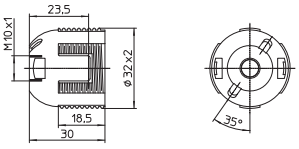



Screw ring
For components with external thread 32x2
Ø 38.9 mm, height: 7.5 mm
Material: PPS, black
Weight: 2.3 g, unit: 1000 pcs.
Type: 97282
Ref. No.: 502416

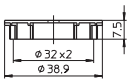



GU10, GZ10 lampholders
Casing: steatite, cover plate: PPS
T240, nominal rating: 2/250
Push-in terminals for stranded conductors
with ferrule on bare end of core Ø 1.5–1.8 mm
Fixing holes for screws M3
Weight: 13.6/14 g, unit: 500 pcs.
Type: 31755/31705
Ref. No.: 535034 GU10, GZ10 lampholder
Ref. No.: 535032 GU10 lampholder

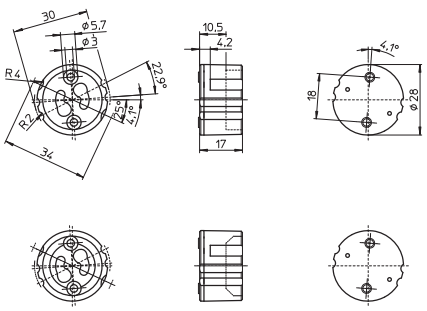



Cover caps for lampholders type 315/317
Material: PBT GF
Front fixing holes for self-tapping
screws acc. to ISO 1481/7049-ST2.9-C/F
Cord grip: twist and block (for single-core leads)
Rear lead exit: max. Ø 2.5 mm
Weight: 6.9 g, unit: 500 pcs.
Type: 97765
Ref. No.: 536164 black
Ref. No.: 543615 grey

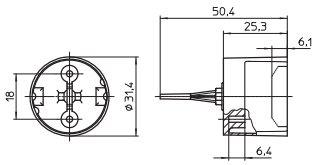



R7s Thermoplastic Lampholders

For mains voltage halogen incandescent lamps

R7s lampholders
Casing: LCP, black, T270
Contact pin: Ni, nominal rating: 2/250
Lead: Cu nickel-plated, stranded conductors
0.75 mm², PTFE-insulation, length: 300 mm
Fixing holes for screws M4
Weight: 15.5 g, unit: 25 pcs.
Type: 31690 lead exit right
Ref. No.: 504296
Type: 31691 lead exit left
Ref. No.: 504297

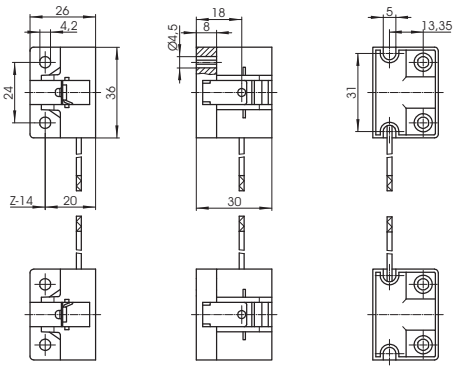

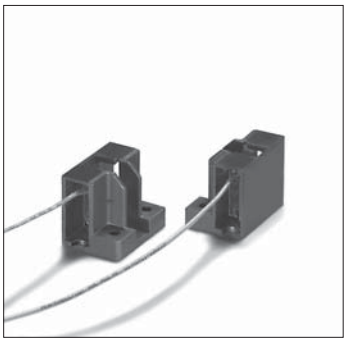

R7s Ceramic Lampholders

For mains voltage halogen incandescent lamps

The luminaire design must ensure protection from electric shock as well as sufficient creepage distances and clearances from live parts on the back of lampholder.

If the central hole on the bracket is used for fixing there must be a support within the luminaire to ensure that the bracket cannot be deformed.

Partly enclosed R7s lampholder
Casing: ceramic, T350
Contact pin: Cu, silver bulb
Nominal rating: 8/250
Leads: Cu nickel-plated, stranded conductors
0.75 mm², PTFE-insulation, length: 200 mm
With fixing screw M4
Weight: 25.4 g, unit: 400 pcs.
Type: 32300
Ref. No.: 100912

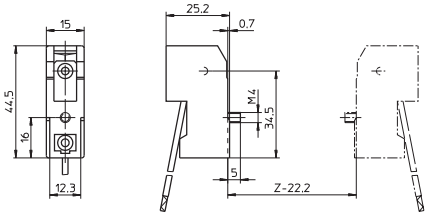

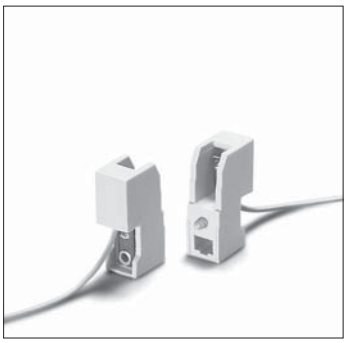

Partly enclosed R7s lampholder
Casing: ceramic, T350
Contact pin: Cu, silver bulb
Nominal rating: 8/250
Leads: Cu nickel-plated, stranded conductors
0.75 mm², PTFE-insulation, length: 200 mm
Oblong holes for screws M3/M4
Central hole for screw M4
Weight: 59.3 g, unit: 200 pcs.
Type: 32390 contact distance: 74.9 mm
Ref. No.: 107213

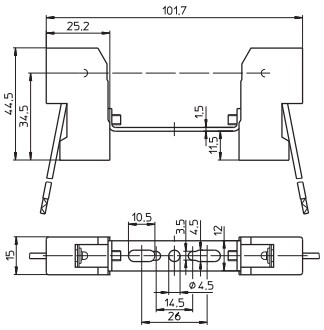

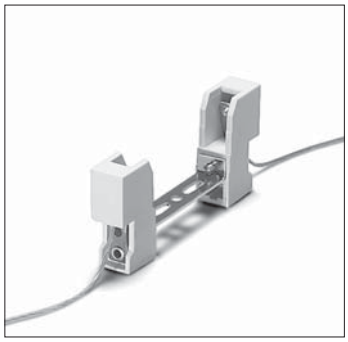

Partly enclosed R7s lampholder
Casing: ceramic, T350
Contact pin: Cu, silver bulb
Nominal rating: 8/250
Leads: Cu nickel-plated, stranded conductors
0.75 mm², PTFE-insulation, length: 200 mm
Oblong holes for screws M3/M4
Central hole for screw M4
Weight: 61 g, unit: 200 pcs.
Type: 32391 contact distance: 74.9 mm
Ref. No.: 107214

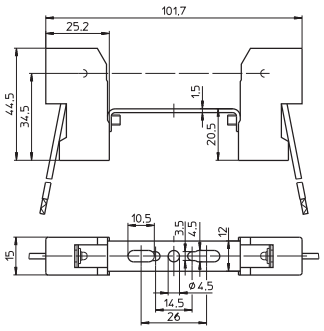

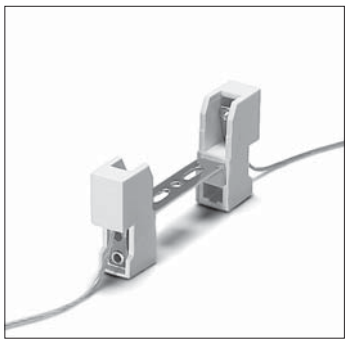

Partly enclosed R7s lampholder
Casing: ceramic, T350
Contact pin: Cu, silver bulb
Nominal rating: 8/250
Leads: Cu nickel-plated, stranded conductors
0.75 mm², PTFE-insulation, length: 200 mm
Oblong holes for screws M3/M4
Central hole for screw M4
Weight: 61.3 g, unit: 200 pcs.
Type: 32395 contact distance: 74.9 mm
Ref. No.: 107215

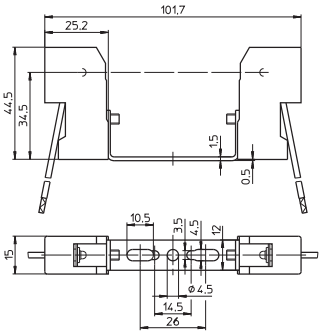

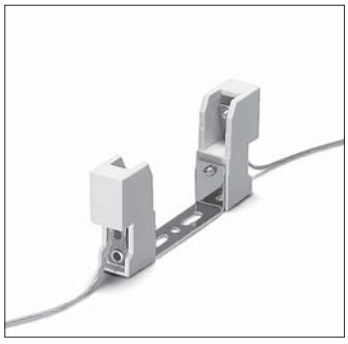

Partly enclosed R7s lampholder
Casing: ceramic, T350
Contact pin: Cu, silver bulb
Nominal rating: 8/250
Leads: Cu nickel-plated, stranded conductors
0.75 mm², PTFE-insulation, length: 200 mm
Oblong holes for screws M4
Central hole for screw M4
Weight: 64.9 g, unit: 200 pcs.
Type: 32310 contact distance: 114.2 mm
Ref. No.: 107195

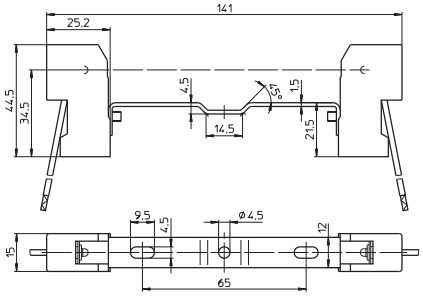

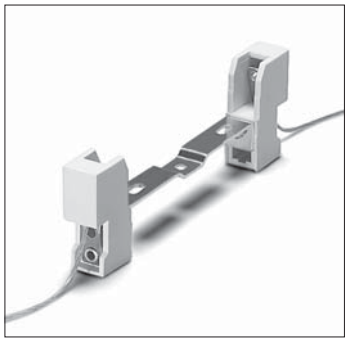

Partly enclosed R7s lampholder
Casing: ceramic, T350
Contact pin: Cu, silver bulb
Nominal rating: 8/250
Leads: Cu nickel-plated, stranded conductors
0.75 mm², PTFE-insulation, length: 200 mm
Oblong holes for screws M4
Central threaded bush M4
Weight: 66.5 g, unit: 200 pcs.
Type: 32320 contact distance: 114.2 mm
Ref. No.: 107194

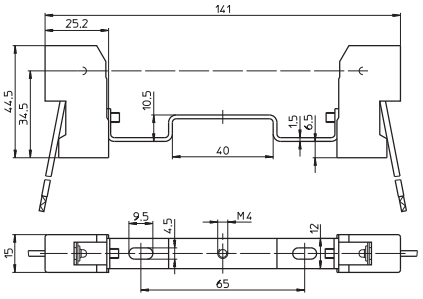



Partly enclosed R7s lampholder
Casing: ceramic, T350
Contact pin: Cu, silver bulb
Nominal rating: 8/250
Leads: Cu nickel-plated, stranded conductors
0.75 mm², PTFE-insulation, length: 200 mm
Oblong holes for screws M4
Central hole for screw M4
Weight: 65.4 g, unit: 200 pcs.
Type: 32340 contact distance: 114.2 mm
Ref. No.: 107193

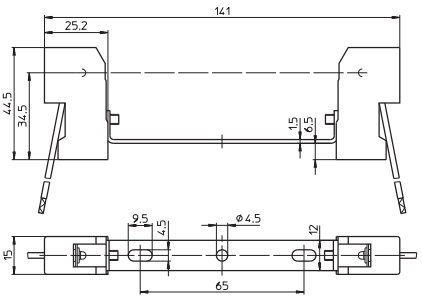

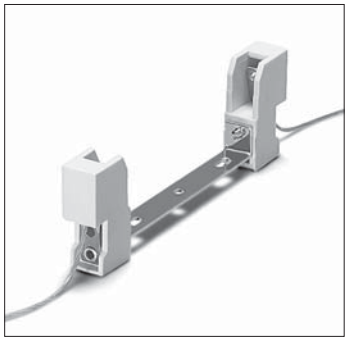

Partly enclosed R7s lampholder
Casing: ceramic, T350
Contact pin: Cu, silver bulb
Nominal rating: 8/250
Leads: Cu nickel-plated, stranded conductors
0.75 mm², PTFE-insulation, length: 200 mm
Oblong holes for screws M4
Central hole for screw M5
Weight: 66.7 g, unit: 200 pcs.
Type: 32360 contact distance: 114.2 mm
Ref. No.: 107192

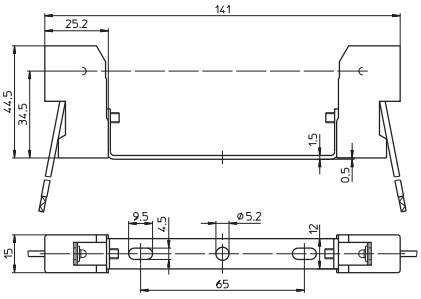

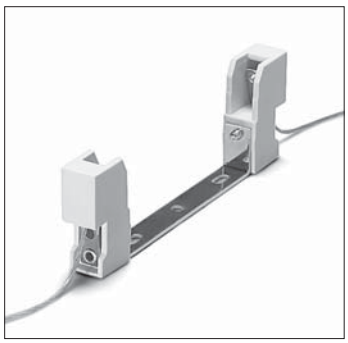

Partly enclosed R7s lampholder
Casing: ceramic, T350
Contact pin: Cu, silver bulb
Nominal rating: 8/250
Leads: Cu nickel-plated, stranded conductors
0.75 mm², PTFE-insulation, length: 200 mm
Oblong holes for screws M4
Central hole for screw M5
Weight: 71.3 g, unit: 200 pcs.
Type: 32380 contact distance: 114.2 mm
Ref. No.: 109497

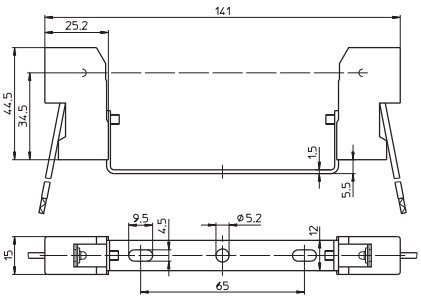

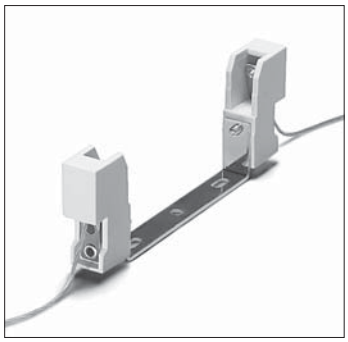

Protection cap for R7s lampholders
For push-fit onto lampholders type 323
Protection against electrical shock
on the rear side of the lampholder
Lampholder with assembled protection cap on request
Material: LCP, natural
Weight: 0.7 g, unit: 1000 pcs.
Type: 97528
Ref. No.: 507592

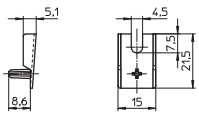

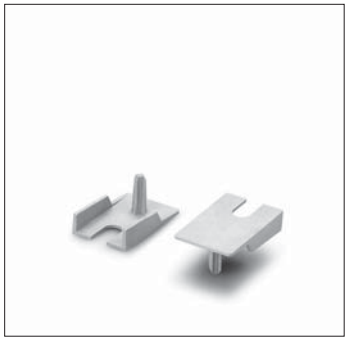

R7s Metal Lampholders

For mains voltage halogen incandescent lamps

R7s lampholder
Casing: Al, T300, contact pin: Ni
Nominal rating: 10/250
Lead: Cu nickel-plated, stranded conductors
0.75 mm², PTFE-insulation, length: 300 mm
Fixing flange
Fixing holes for screws M4
Weight: 21 g, unit: 50 pcs.
Type: 30023
Ref. No.: 100616

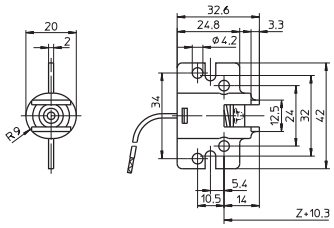

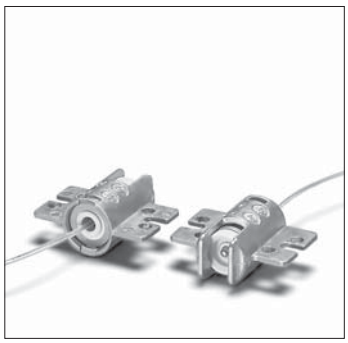

R7s lampholder
Casing: Al, T300, contact pin: Cu, silver bulb
Nominal rating: 10/250
Lead: Cu nickel-plated, stranded conductors
1 mm², PTFE-insulation, length: 300 mm
Fixing flange
Fixing holes for screws M3
Weight: 15.7 g, unit: 1000 pcs.
Type: 30523
Ref. No.: 100710

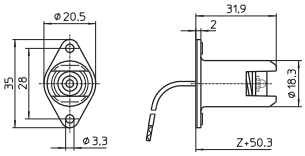



R7s lampholder
Casing: Al, T300, contact pin: Cu, silver bulb
Nominal rating: 10/250
Lead: Cu nickel-plated, stranded conductors
1 mm², PTFE-insulation, length: 350 mm
Fixing bracket
Fixing holes for screws M4
Weight: 24.8 g, unit: 500 pcs.
Type: 30550
Ref. No.: 100720

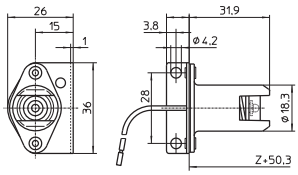



Connection Boxes

For connecting downlights in false ceilings according to standards
The luminaire manufacturer is responsible for the right choice of accessories.

Application examples for connection box

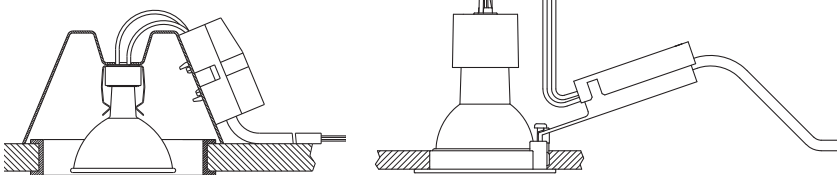

Connection box
Material: PC, black
Split pins for wall thickness 0.5–1.5 mm
With integrated 2-pole terminal block and contact bushings: 2.5 mm²
With cord grip
Weight: 18 g, unit: 500 pcs.
Type: 85007
Ref. No.: 108940

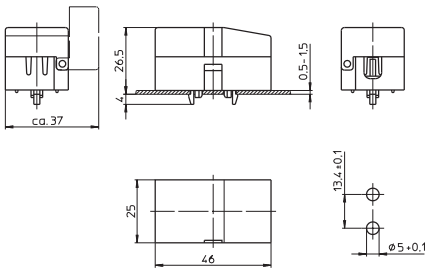

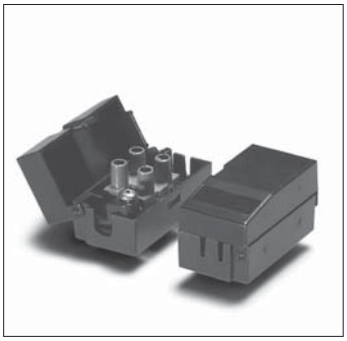

Connection boxes
Material: PA, black
With integrated 2-pole terminal block for leads with cross-section: 0.5–2.5 mm²
Cord grip on primary side for leads
H03VV-F/H05VV-F (Ø 5–7 mm) and single-core Ø 3–7 mm
Cord grip on secondary side for
single-core Teflon leads up to Ø 3 mm and single-core PVC leads up to Ø 2.2 mm
Weight: 21.8/20.1 g, unit: 500 pcs.
Type: 85011/85012 plastic bracket with locking screw
Ref. No.: 543048 12 V
Ref. No.: 543049 230 V
Type: 85013/85014 for fixing screw
Ref. No.: 543053 12 V
Ref. No.: 543054 230 V

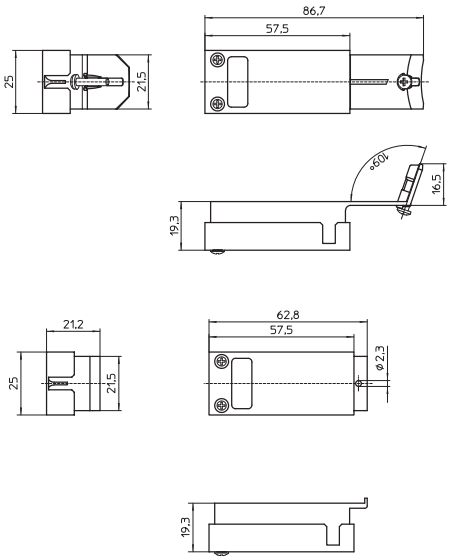

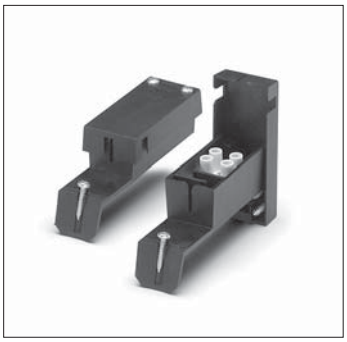

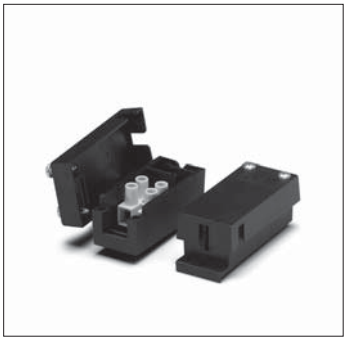

Connection boxes
With plastic bracket with locking screw
Material: PA, black
With integrated 3-pole terminal block for leads with cross-section: 0.75–4 mm²
Cord grip on primary side for leads Ø 2.5–11 mm
Cord grip on secondary side for
single-core Teflon leads up to Ø 1.8 mm and single-core PVC leads up to Ø 2.2 mm
Weight: 28.7 g, unit: 500 pcs.
Type: 85015/85016
Ref. No.: 543058 12 V
Ref. No.: 543059 230 V

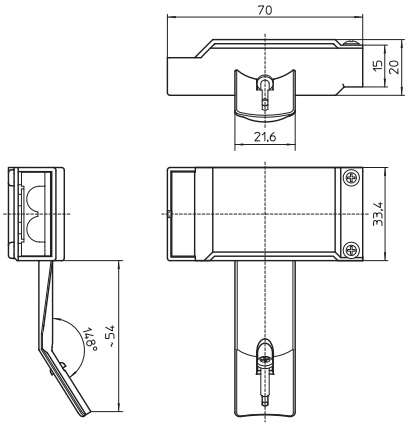

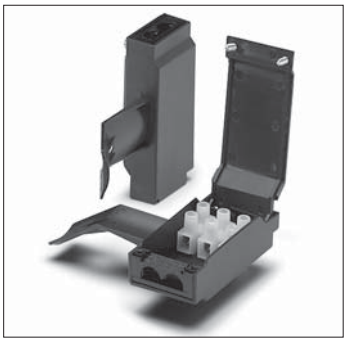

Connectors

Modular system for various assembly options
Connectors can be delivered pre-assembled
with lampholder and lead assemblies

Male and female plug
Nominal rating: 7/600
For cable: 0.3–0.9 mm²
For crimping on the end of lead
Material: brass, tinned
Weight: 0.1 g, unit: 5000 pcs.
Type: 93088 male plug
Ref. No.: 505251
Type: 93089 female plug
Ref. No.: 506807



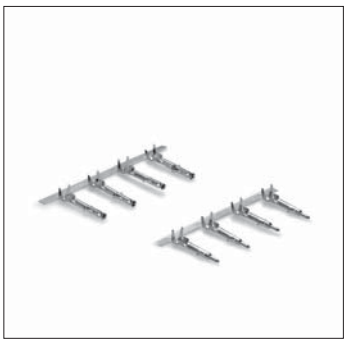

Male and female casing
For male and female plug
For push-fit assembly
Material: PA, natural
Weight: 0.8/1 g, unit: 2500 pcs.
Type: 97355 male casing
Ref. No.: 509295 UL94V-0
Ref. No.: 508562 UL94V-2
Type: 97356 female casing
Ref. No.: 509296 UL94V-0
Ref. No.: 508563 UL94V-2

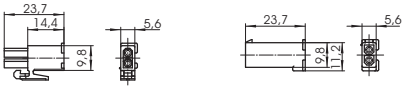



LAMPHOLDERS MADE OF THERMOPLASTICS, METAL AND PORCELAIN





LAMPHOLDERS FOR GENERAL-SERVICE INCANDESCENT AND RETROFIT LAMPS

The general-service light bulb owes its name to its bulbous shape, which has remained almost unchanged to this day. The tungsten filament contained within the bulb's glass shell, in which there used to be a vacuum but which is nowadays more usually filled with an inert gas, begins to glow as electricity is passed through it. Despite the considerable technical progress that has been made, the typical disadvantages associated with light bulbs still remain. For instance, incandescent lamps mainly radiate heat with no more than 5–10% light output and have a service life of approx. 1000 operating hours.

As a result of energy-efficiency regulations in the various regions of the world, the use of all-purpose incandescent lamps has been limited or even banned. Nonetheless, thanks to the many different shapes and surfaces of lamp bulbs, all-purpose incandescent lamps still have a firm place in decorative residential lighting applications and are often an important feature of luminaire designs. Retrofit lamps that comply with energy-efficiency regulations are increasingly being used as a replacement for all-purpose incandescent lamps and use the same lampholder systems found with E12/E14, E26/E27, E39/E40, B15d and B22d bases.

VS lampholders for general-service incandescent and retrofit lamps

Depending on the operating conditions, lampholders can be made of thermoplastics, metal or porcelain. Metal lampholders are most often used for high-grade decorative luminaires. In accordance with protection class I, metal lampholders must be included in the measures taken to earth the luminaire.

Due to their heat resistance, Edison lampholders made of porcelain are frequently used for higher-output lamps. Classic lampholder materials like metal and porcelain are increasingly being displaced by modern thermoplastics.

5 Lampholders for General-service Incandescent and Retrofit Lamps

E14 lampholders **420–430**
E14 thermoplastic lampholders, one-piece and cover caps 420-424
E14 table lamp set 425
E14 thermoplastic lampholders, three-piece 425-427
E14 porcelain lampholders, one-piece 428
E14 metal lampholders, three-piece 428-429
E14 thermoplastic rocker switch lampholders 429-430
E14 lampholder for emergency lighting 430

E27 lampholders **431–448**
E27 thermoplastic lampholders, one-piece and cover caps 431-435
E27 table lamp set 436
E27 renovation kit lampholders 436
E27 thermoplastic lampholders, three-piece 437-439
E27 porcelain lampholders 440-442
E27 metal lampholders, three-piece 442-443
E27 thermoplastic pull-switch lampholders 443-444
E27 metal pull-switch lampholders 445
E27 thermoplastic rocker switch lampholders 446
E27 thermoplastic rotary switch lampholders 447
E27 festoon lampholders 447-448

B22d lampholders, accessories **448–449**

Accessories for E14, E27 and B22d lampholders **450–455**

E40 porcelain lampholders **456**

Technical details for incandescent lamps **457–471**
General technical details 533-540
Glossary 541-543

E14 Thermoplastic Lampholders, One-piece

For incandescent lamps with base E14

E14 lampholders with temperature marking
T180 on request.
Brass-finished versions are available on request.

E14 lampholders, for cover caps
Plain casing
Casing: PET GF, T210, nominal rating: 2/250
Push-in twin terminals: 0.5–1.5 mm²
Rear fixing holes for self-tapping screws
acc. to ISO 1481/7049-ST2.9-C/F
Weight: 11.3/11.4 g, unit: 1000 pcs.
Type: 64001
Ref. No.: 109384 white
Ref. No.: 109383 black

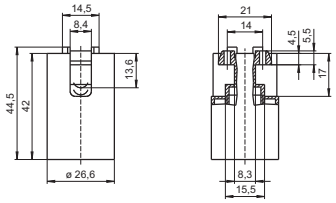



E14 lampholders, for cover caps
External thread 28x2 IEC 60399
Casing: PET GF, T210, nominal rating: 2/250
Push-in twin terminals: 0.5–1.5 mm²
Rear fixing holes for self-tapping screws
acc. to ISO 1481/7049-ST2.9-C/F
Weight: 12.5/12.2 g, unit: 1000 pcs.
Type: 64101
Ref. No.: 109387 white
Ref. No.: 109386 black

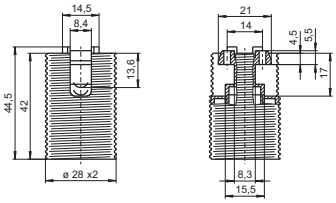



E14 lampholders, for cover caps
External thread 28x2 IEC 60399, with flange
Casing: PET GF, T210, nominal rating: 2/250
Push-in twin terminals: 0.5–1.5 mm²
Rear fixing holes for self-tapping screws
acc. to ISO 1481/7049-ST2.9-C/F
Weight: 12.7 g, unit: 1000 pcs.
Type: 64201
Ref. No.: 503924 white
Ref. No.: 503923 black

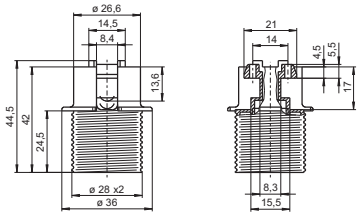



E14 lampholders, for cover caps
Profiled shape, short external thread 28x2 IEC 60399
Casing: PET GF, T210, Nominal rating: 2/250
Push-in twin terminals: 0.5–1.5 mm²
Rear fixing holes for self-tapping screws
acc. to ISO 1481/7049-ST2.9-C/F
Weight: 8.5/8.4 g, unit: 1000 pcs.
Type: 64370
Ref. No.: 546456 white
Ref. No.: 546454 black

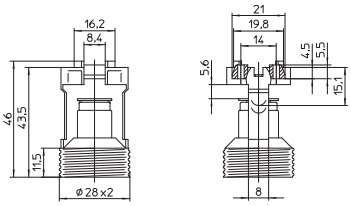



E14 lampholders
Profiled shape, short external thread 28x2 IEC 60399
Casing: PET GF, T210, nominal rating: 2/250
Push-in twin terminals: 0.5–1.5 mm²
For clipping-in
Weight: 6.6/6.8 g, unit: 1000 pcs.
Type: 64360
Ref. No.: 506247 white
Ref. No.: 506249 black

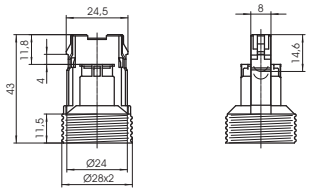



E14 lampholders
Profiled shape, nominal rating: 2/250
Push-in twin terminals: 0.5–1.5 mm²
Lateral push-fit foot for cut-out 10x20 mm
for wall thickness 0.6–1.3 mm
Tilt of lamp axis: 6°
For cover cap 503579 (see p. 421)
Weight: 9.1/9.2 g, unit: 1000 pcs.
Type: 64307
Ref. No.: 108983 PBT GF, white, T180
Ref. No.: 509263 PET GF, natural, T210

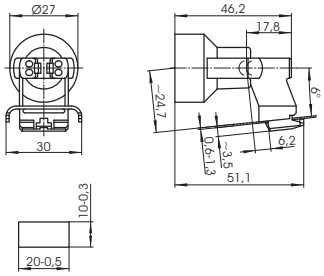



E14 lampholder
Profiled shape
Casing: PET GF, white, T210
Nominal rating: 2/250
Push-in twin terminals: 0.5–1.5 mm²
For insertion, clipping-in or bayonet fixing
for plastic cut-out: Ø 27.5 mm
with wall thickness: 2.5 mm
Weight: 7.1 g, unit: 1000 pcs.
Type: 64308
new **Ref. No.: 533820**

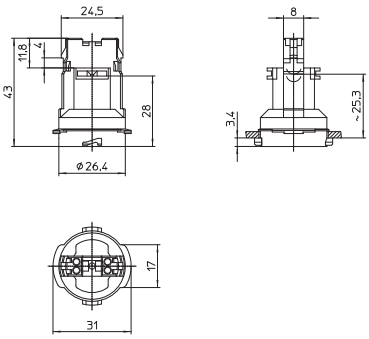



Cover Caps

For E14 thermoplastic lampholders, one-piece

Brass-finished versions are available on request.

Cover cap for lampholders type 64307
For luminaires of protection class II
Material: PP, white
Weight: 2.4 g, unit: 1000 pcs.
Type: 97322
Ref. No.: 503579

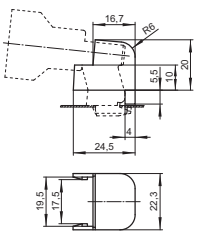



Cover caps
Material: PA GF
Female nipple: M10x1
Weight: 7.6/8.8 g, unit: 1000 pcs.
Type: 85075
Ref. No.: 109110 white
Ref. No.: 109112 black

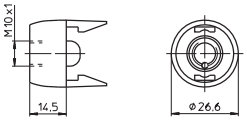



Cover caps
Material: PA GF
Moulded thread: M10x1
Rotation stop: external
Weight: 2.7 g, unit: 1000 pcs.
Type: 97636
Ref. No.: 109676 white
Ref. No.: 109677 black

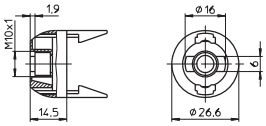



Cover caps
Material: PA GF
Moulded thread: M10x1
Rotation stop: external
With locking screw
Weight: 3 g, unit: 1000 pcs.
Type: 85076
Ref. No.: 400818 white
Ref. No.: 400817 black

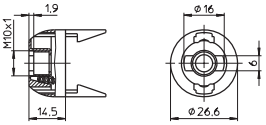



Cover caps
Height: 19 mm
Material: PA GF
Moulded thread: M10x1
Rotation stop: external
Weight: 3.2/3.1 g, unit: 1000 pcs.
Type: 97705
Ref. No.: 520733 white
Ref. No.: 520734 black

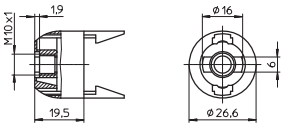



Cover caps
Height: 19 mm
Material: PA GF
Moulded thread: M10x1
Rotation stop: external
With locking screw
Weight: 3.6/3.5 g, unit: 1000 pcs.
Type: 85074
Ref. No.: 520735 white
Ref. No.: 520736 black

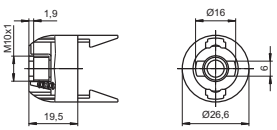



Cover caps
Material: PA GF
Round hole: Ø 10.5 mm
Rotation stop: internal and external
Weight: 4.3 g, unit: 1000 pcs.
Type: 97666
Ref. No.: 109119 white
Ref. No.: 109120 black

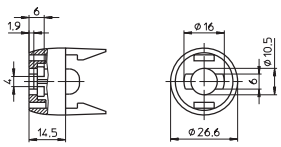



Cover caps
Material: PA GF
Profiled hole: Ø 10.5 x 8.6 mm
Fixing holes for screws M3
Weight: 4.4/4.3 g, unit: 1000 pcs.
Type: 97635
Ref. No.: 109122 white
Ref. No.: 109123 black

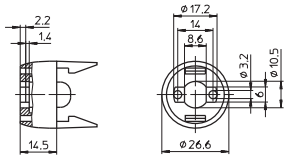



Cover cap
Material: PA GF
Profiled hole: Ø 10.4 mm
Rotation stop: internal and external
Weight: 4 g, unit: 1000 pcs.
Type: 97697
Ref. No.: 109126 black

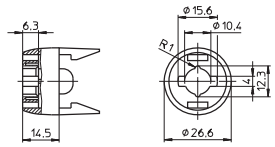



Cover caps
Height: 19 mm
Material: PA GF
Profiled hole: Ø 10.4 mm
Rotation stop: internal and external
Weight: 2.7 g, unit: 1000 pcs.
Type: 97708
Ref. No.: 520759 white
Ref. No.: 520760 black

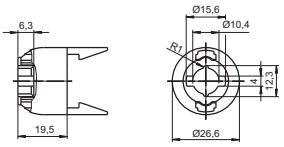



Cover caps
With peg
With integrated cord grip
For leads H03VVH2-F 2X0.75
Material: PA GF
Weight: 4.2/4.3 g, unit: 1000 pcs.
Type: 97000
Ref. No.: 503457 white
Ref. No.: 503458 black

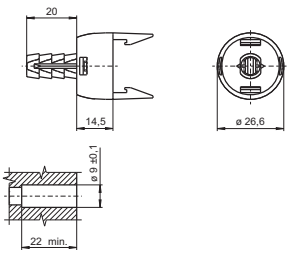



new

Cover cap
With male nipple: M10x1
With rotation stop
With integrated cord grip
For leads H03VVH2-F 2X0.75
Material: PA GF, white
Weight: 4.1 g, unit: 1000 pcs.
Type: 97037
Ref. No.: 508067

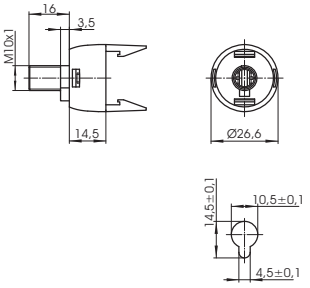



Cover cap
External thread 28x2 IEC 60399
With integrated cord grip
For leads H03VVH2-F 2X0.75
Material: PA GF, natural
Weight: 5.5 g, unit: 1000 pcs.
Type: 97427
Ref. No.: 509340

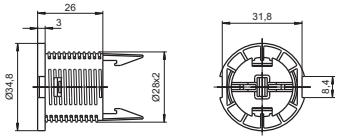

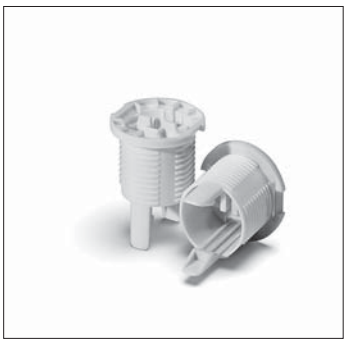

Cover cap
Lateral push-fit foot for cut-out 10x20 mm
For luminaires of protection class II
Material: PA GF, white
Weight: 4.3 g, unit: 1000 pcs.
Type: 97745
new **Ref. No.: 546006**

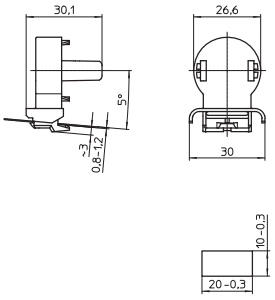



Cover cap
With central positioning stud
Material: PA GF
Fixing holes for countersunk screws Ø 3 mm
Weight: 3 g, unit: 1000 pcs.
Type: 91522
Ref. No.: 535357

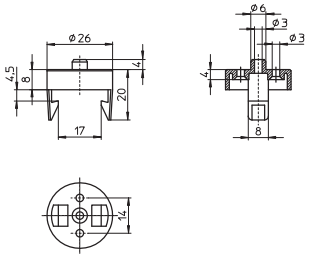



Table Lamp Set

For E14 lampholders, one-piece

For E14 lampholders type 64001 (s. p. 420)
For glass with hole: Ø 40–45 mm
Material: PA

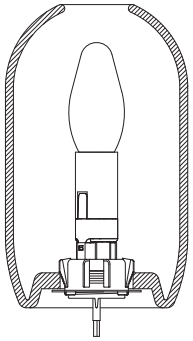

Fixing insert for cover cap 534089
For glass with hole: Ø 40–45 mm,
wall thickness: 3–10 mm
Weight: 6.9 g, unit: 500 pcs.
Type: 97658
Ref. No.: 534087 natural

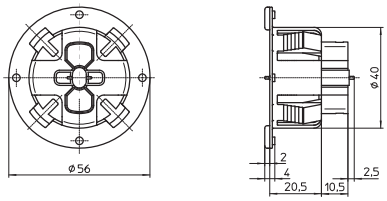

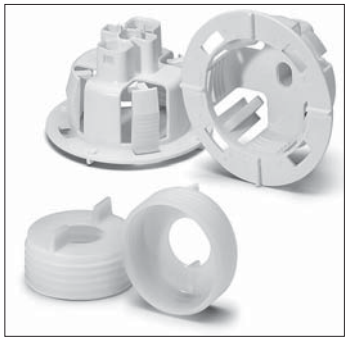

Screw ring for fixing insert
External thread 38x2.5
Weight: 3.4 g, unit: 500 pcs.
Type: 97701
Ref. No.: 534088 natural

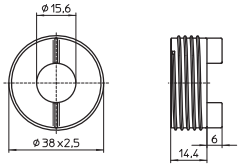

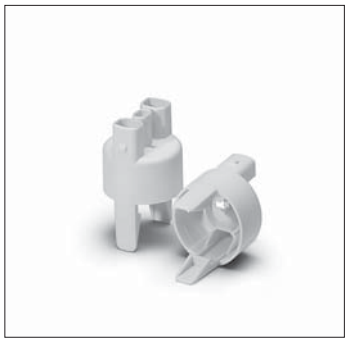

Cover cap for E14 lampholders
Suitable for fixing insert 534087
With cord grip for lead H03VVH2-F
Weight: 3.4 g, unit: 1000 pcs.
Type: 97692
Ref. No.: 534089 white

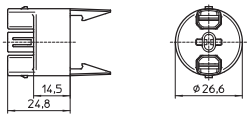



E14 Thermoplastic Lampholders, Three-piece

For incandescent lamps with base E14

Nominal rating: 2/250
Temperature marking: T190
Brass-finished versions are available on request.



Inserts
Material: PET GF, black
Casing lock
Weight: 3.9/3.2 g, unit: 1000 pcs.
Type: 81095 screw terminals: 0.5–2.5 mm²
Ref. No.: 103424
Type: 81096 push-in twin terminals: 0.5–1.5 mm²
Ref. No.: 107716





Plain casings
Material: PET GF
Weight: 9/8.5 g, unit: 1000 pcs.
Type: 81093
Ref. No.: 103415 white
Ref. No.: 103414 black

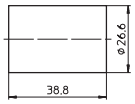

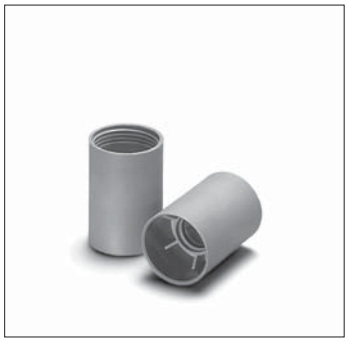

Threaded casings 28x2 IEC 60399
Material: PET GF
Weight: 9.8/9.6 g, unit: 1000 pcs.
Type: 81109
Ref. No.: 103431 white
Ref. No.: 103430 black

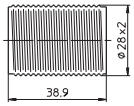



Threaded casings 28x2 IEC 60399
With flange
Material: PET GF
Weight: 10.6/10.4 g, unit: 1000 pcs.
Type: 81120
Ref. No.: 103443 white
Ref. No.: 103442 black

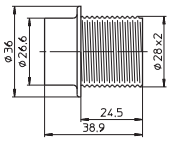



Caps
Material: PA GF
Female nipple: M10x1
Height: 13.7 mm
Weight: 6.9/7.2 g, unit: 1000 pcs.
Type: 81002
Ref. No.: 109102 white
Ref. No.: 109103 black

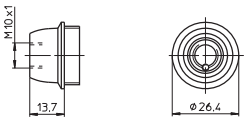



Caps
Material: PA GF
Female nipple: M10x1
Height: 18.7 mm
Weight: 7/7.3 g, unit: 1000 pcs.
Type: 81024
Ref. No.: 109805 white
Ref. No.: 109145 black

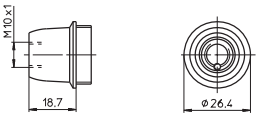



Caps
Material: PA GF
Moulded thread: M10x1
Rotation stop: external
Height: 13.7 mm
Weight: 3.3/3.7 g, unit: 1000 pcs.
Type: 96159
Ref. No.: 109095 white
Ref. No.: 109084 black

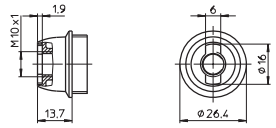



Caps
Material: PA GF
Moulded thread: M10x1
Rotation stop: external
Height: 18.7 mm
Weight: 3.6/3.9 g, unit: 1000 pcs.
Type: 96211
Ref. No.: 109149 white
Ref. No.: 109150 black

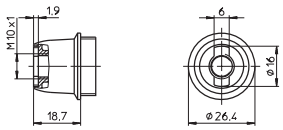



Caps
Material: PA GF
Moulded thread: M10x1
Rotation stop: external
With locking screw
Height: 13.7 mm
Weight: 3.7/4 g, unit: 1000 pcs.
Type: 81130
Ref. No.: 109041 white
Ref. No.: 109054 black

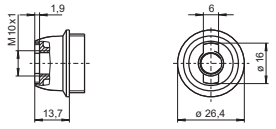



Caps
Material: PA GF
Moulded thread: M10x1
Rotation stop: external
With locking screw
Height: 18.7 mm
Weight: 3.9/4.3 g, unit: 1000 pcs.
Type: 81132
Ref. No.: 109152 white
Ref. No.: 109153 black

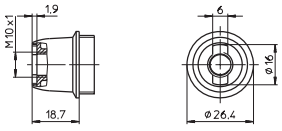



Caps
Material: PA GF
Round hole: Ø 10.5 mm
Rotation stop: internal
Height: 13.7 mm
Weight: 3.3 g, unit: 1000 pcs.
Type: 96004
Ref. No.: 508352 white
Ref. No.: 508353 black

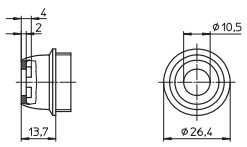



E14 Porcelain Lampholders, One-piece

For incandescent lamps with base E14

E14 lampholder, one-piece
Material: porcelain, white, T270
Nominal rating: 2/250
Screw terminals: 0.5–2.5 mm²
With lateral fixing flange
Fixing oblong hole for screw M4
Weight: 57 g, unit: 250 pcs.
Type: 51020
Ref. No.: 543419

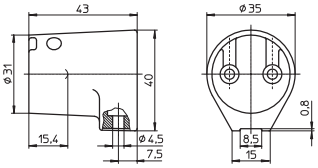



E14 lampholders, one-piece
Material: porcelain, white, T270
Nominal rating: 2/250
Screw terminals: 0.5–2.5 mm²
Fixing bracket with tapped holes for screws M3
Weight: 62/63 g, unit: 250 pcs.
Type: 51021/51022
Ref. No.: 543420
Ref. No.: 543421 with earth terminal

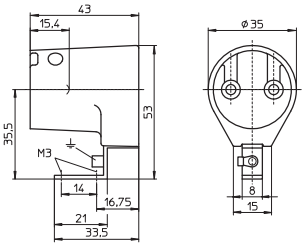



E14 Metal Lampholders, Three-piece

For incandescent lamps with base E14

Nominal rating: 2/250
Temperature marking: T190/T240
Type: 513 plain casing
Type: 514 threaded casing 28x2



Insert
Material: porcelain, white
Casing lock
Screw terminals: 0.5–2.5 mm²
Weight: 10.3 g, unit: 500 pcs.
Type: 81020
Ref. No.: 107944





Plain casings
Material: zinc-coated polished steel
Weight: 14.3/14.2/18.3/18.2 g
Unit: 500 pcs.
Type: 81019 insulating threaded ring: duroplastic, T190
Ref. No.: 103359 chrome-finish
Ref. No.: 103360 brass-finish
Type: 81018 insulating threaded ring: steatite, T240
Ref. No.: 507049 chrome-finish
Ref. No.: 507050 brass-finish

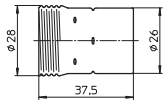



Threaded casings 28 x 2 IEC 60399
Material: zinc-coated polished steel
Weight: 14.4/14.4/18.9/18.9 g
Unit: 500 pcs.
Type: 81022 insulating threaded ring: duroplastic, T190
Ref. No.: 103365 chrome-finish
Ref. No.: 103366 brass-finish
Type: 81017 insulating threaded ring: steatite, T240
Ref. No.: 507052 chrome-finish
Ref. No.: 507053 brass-finish

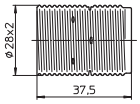



Caps
Material: zinc-coated polished steel
Female nipple: M10x1
Weight: 7.2/7.1/7.9/7.8 g
Unit: 500 pcs.
Type: 80006
Ref. No.: 102946 chrome-finish
Ref. No.: 102947 brass-finish
Type: 80003 with earth terminal
Ref. No.: 102938 chrome-finish
Ref. No.: 102939 brass-finish

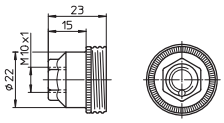

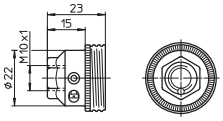



E14 Thermoplastic Rocker Switch Lampholders

For incandescent lamps with base E14

Nominal rating: 2/250
Temperature marking: T160

Suitable casings see page 426:
Type: 81093 plain casing
Type: 81109 threaded casing 28 x 2
Type: 81120 threaded casing 28 x 2, with flange



Inserts with switch
Material: PET GF
Screw terminals: 0.5–2.5 mm²
Weight: 7.9 g, unit: 1000 pcs.
Type: 83141
Ref. No.: 537087 switch, white
Ref. No.: 537088 switch, black

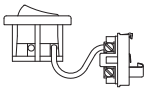



Caps
Material: PET GF
Moulded thread: M10x1
with locking screw
Weight: 9.9 g, unit: 1000 pcs.
Type: 81100
Ref. No.: 537079 white
Ref. No.: 537080 black

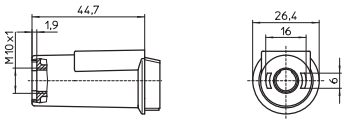



E14 Lampholder for Emergency Lighting

For incandescent lamps with base E14

E14 lampholder, nominal rating: 2/250
For emergency lighting acc. to
DIN VDE 0711 part 2-22/EN 60598-2-22
Casing: FS 181 SG, white
Screw terminals: max. 10 mm²
With cord grip for leads max. Ø 7.5 mm,
after turn of cord grip for leads max. Ø 12 mm
"Green dot" sticker enclosed
Weight: 49 g, unit: 200 pcs.
Type: 52001
Ref. No.: 101910

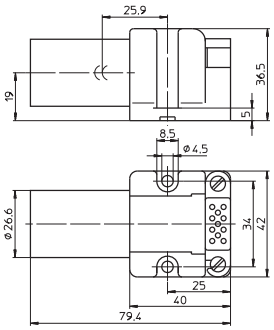



E27 Thermoplastic Lampholders, One-piece

For incandescent lamps with base E27

E27 lampholders with temperature marking T180 on request.
Brass-finished versions are available on request.

E27 lampholders, for cover caps
Plain casing
Casing: PET GF, T210
Nominal rating: 4/250
Push-in twin terminals: 0.5–2.5 mm²
Fixing holes for screws M4
Weight: 17.4 g, unit: 500 pcs.
Type: 64401
Ref. No.: 108936 white
Ref. No.: 500810 black

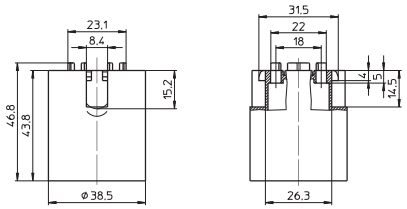



E27 lampholders, for cover caps
External thread 40x2.5 IEC 60399
Casing: PET GF, T210
Nominal rating: 4/250
Push-in twin terminals: 0.5–2.5 mm²
Fixing holes for screws M4
Weight: 19.1/18.8 g, unit: 500 pcs.
Type: 64501
Ref. No.: 108965 white
Ref. No.: 109429 black

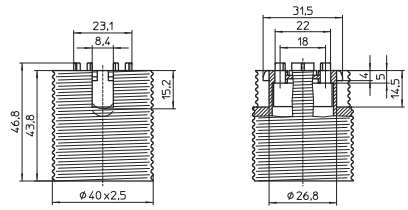

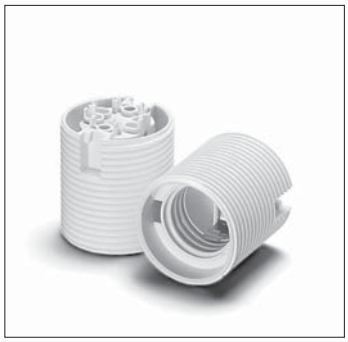

E27 lampholders, for cover caps
External thread 40x2.5 IEC 60399, with flange
Casing: PET GF, T210
Nominal rating: 4/250
Push-in twin terminals: 0.5–2.5 mm²
Fixing holes for screws M4
Weight: 21.4 g, unit: 500 pcs.
Type: 64601
Ref. No.: 501358 white
Ref. No.: 501356 black

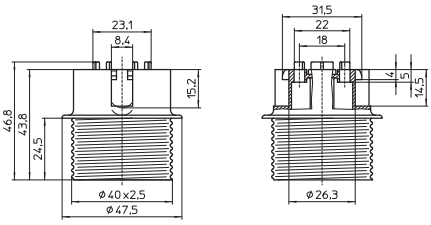



E27 lampholders, for cover caps
Profiled shape, external thread 40x2.5 IEC 60399
Casing: PET GF, T210, nominal rating: 4/250
Push-in twin terminals: 0.5–2.5 mm²
Fixing holes for screws M3
Rear fixing holes for self-tapping screws
acc. to ISO 1481/7049-ST3.9-C/F
Weight: 14.8/14.9 g, unit: 500 pcs.
Type: 64719
Ref. No.: 504303 white
Ref. No.: 504302 black

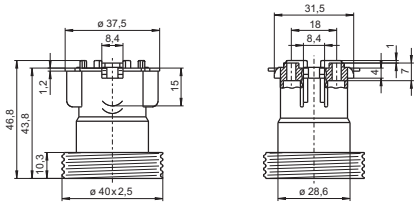



E27 lampholders, for cover caps
Profiled shape, external thread 40x2.5 IEC 60399
Casing: PET GF, T210, nominal rating: 4/250
Push-in twin terminals: 0.5–2.5 mm²
Fixing holes for screws M3
Rear fixing holes for self-tapping screws
acc. to ISO 1481/7049-ST3.9-C/F
Weight: 11.4/11.3 g, unit: 500 pcs.
Type: 64775
Ref. No.: 506255 white
Ref. No.: 506257 black

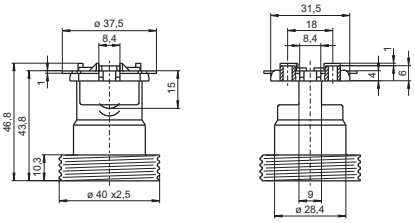



E27 lampholders
Profiled shape, plain, nominal rating: 4/250
Screw terminals: 0.5–2.5 mm²
Fixing holes for screws M3
Rear fixing holes for self-tapping screws
acc. to ISO 1481/7049-ST3.9-C/F
Weight: 11.7/11.5/13 g, unit: 500 pcs.
Type: 64785
Ref. No.: 506263 PET GF, white, T210
Ref. No.: 506265 PET GF, black, T210
Ref. No.: 506267 LCP, natural, T270

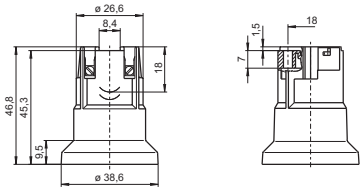



E27 lampholders
For cover caps type 97545/80023 (see p. 434)
Profiled shape, plain, nominal rating: 4/250
Push-in twin terminals: 0.5–2.5 mm²
Fixing holes for screws M3
Rear fixing holes for self-tapping screws
acc. to ISO 1481/7049-ST3.9-C/F
Weight: 11.5/14.9 g, unit: 500 pcs.
Type: 64770
Ref. No.: 108953 PET GF, natural, T210
Ref. No.: 109838 LCP, natural, T270

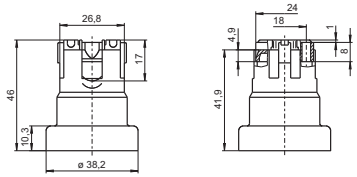



E27 lampholder
For luminaires of protection class II
Profiled shape, plain
Casing: PET GF, white, T210
Nominal rating: 4/250
Screw terminals: 0.5–2.5 mm²
Lateral fixing hole for screw M4
Tilt of lamp axis: 3°
Weight: 15.2 g, unit: 500 pcs.
Type: 64781
Ref. No.: 503041

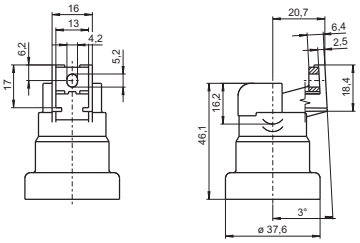



E27 lampholders
Profiled shape, plain
Casing: PET GF, T210
Nominal rating: 4/250
Push-in twin terminals: 0.5–2.5 mm²
Lateral fixing hole for screw M4
Tilt of lamp axis: 3°
Weight: 13.3 g, unit: 500 pcs.
Type: 64740
Ref. No.: 108747 white
Ref. No.: 529599 natural

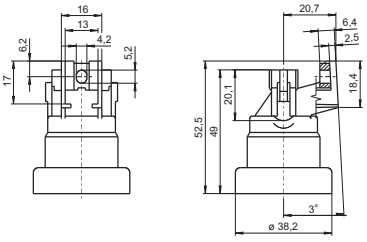



E27 lampholder
Profiled shape, external thread 40x2.5 IEC 60399
Casing: PET GF, natural, T210, nominal rating: 4/250
Push-in twin terminals: 0.5–2.5 mm²
Lateral push-fit foot for cut-out 10x20 mm
Fixing clips for wall thickness 0.4–1 mm
Tilt of lamp axis: 12°
For cover cap 504615 (see below)
Weight: 14.7 g, unit: 500 pcs.
Type: 64741
Ref. No.: 108758

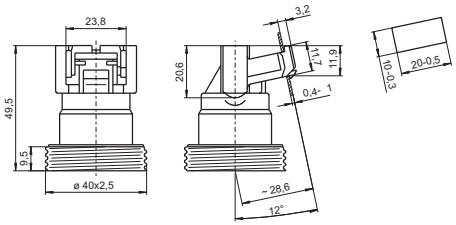



Cover Caps

For E27 thermoplastic lampholders, one-piece and for B22d thermoplastic lampholders

Cover cap for lampholder 108758 (see above)
For luminaires of protection class II
Material: PA GF, white
Weight: 2.7 g, unit: 500 pcs.
Type: 97321
Ref. No.: 504615

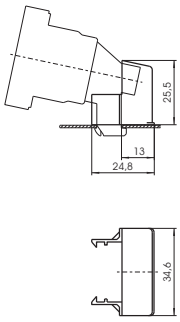

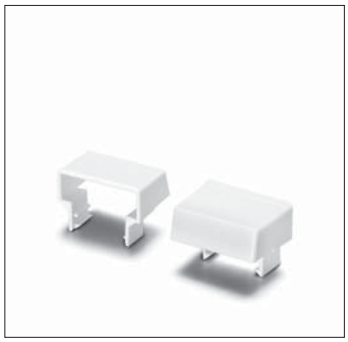

Protection caps for E27 lampholders with
bracket with earth connection 400772 (s. p. 452)
For lampholder type 64770/64785 (s. p. 432)
For luminaires of protection class II
Material: PA GF, natural
Weight: 4.8 g, unit: 500 pcs.
Type: 97497
Ref. No.: 526886
Type: 97498 fixing hole: Ø 10 mm
Ref. No.: 529464

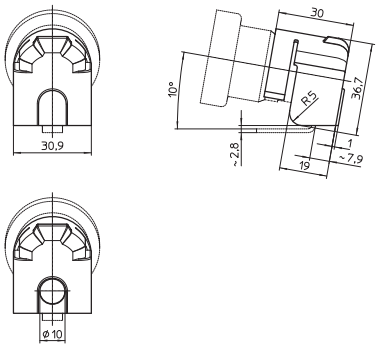



Cover caps
Material: PA GF
Female nipple: M10x1
Weight: 9.6/9.9 g, unit: 500 pcs.
Type: 85070
Ref. No.: 109077 white
Ref. No.: 109092 black

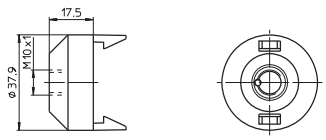



Cover caps
Material: PA GF
Moulded thread: M10x1
Cross groove for rotation stop: external
Weight: 4.4/4.6 g, unit: 500 pcs.
Type: 97665
Ref. No.: 109679 white
Ref. No.: 109680 black

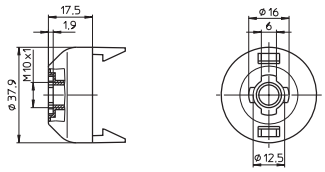



Cover caps
Material: PA GF
Moulded thread: M10x1
Cross groove for rotation stop: external
With lateral hole
Weight: 4/4.6 g, unit: 500 pcs.
Type: 97664
Ref. No.: 109795 white
Ref. No.: 109794 black

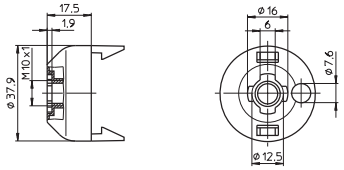



Cover caps
Material: PA GF
Moulded thread: M10x1
Cross groove for rotation stop: external
With locking screw
Weight: 4.7/4.9 g, unit: 500 pcs.
Type: 85077
Ref. No.: 400819 white
Ref. No.: 400820 black

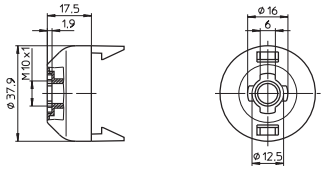



Cover caps
For E27 lampholders type 64770
Material: PA GF, black
Moulded thread: M10x1
Cross groove for rotation stop: external
Weight: 3.1/3.4 g, unit: 500 pcs.
Type: 97545
Ref. No.: 532390
Type: 80023 with locking screw
Ref. No.: 532391





Cover caps
Material: PA GF
Profiled hole: Ø 10.4 mm
Rotation stop: internal and external
Weight: 5.7/5.9 g, unit: 500 pcs.
Type: 97698
Ref. No.: 109560 white
Ref. No.: 109184 black

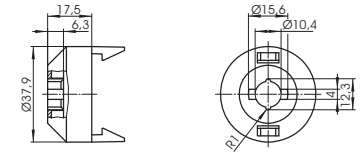



Cover caps
Material: PA GF
Round hole: Ø 10.5 mm
Rotation stop: external
Fixing holes for screws M4
Weight: 5.4/5.5 g, unit: 500 pcs.
Type: 97511
Ref. No.: 109045 white
Ref. No.: 109062 black

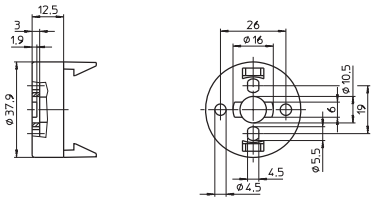



Cover caps
Conical shape
Material: PA GF
Moulded thread: M10x1
Cross groove for rotation stop: external
Weight: 8.9/8.8 g, unit: 500 pcs.
Type: 97260
Ref. No.: 109555 white
Ref. No.: 109556 black

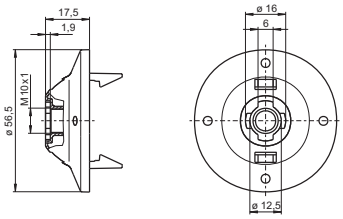

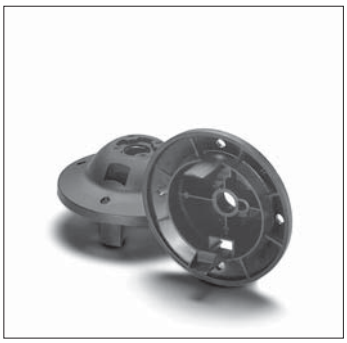

Cover caps
Conical shape
Material: PA GF
With integrated cord grip
For leads H03VV-F 2X0.5 or
H03VV-F 2X0.75
Weight: 10.6/10.5 g, unit: 500 pcs.
Type: 83282
Ref. No.: 109159 white
Ref. No.: 109462 black

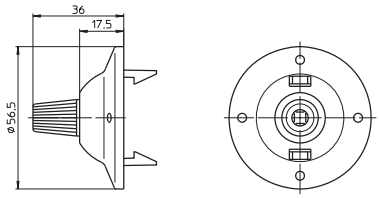



Cover cap for lampholder 102624 (see p. 440)
With cord grip for self-tapping screws
acc. to ISO 1481/7049-ST2.9-C/F
Cord grip for luminaires of protection class II
Material: PA GF, black
Weight: 12.5/2.2 g, unit: 500 pcs.
Type: 96206 cover cap
Ref. No.: 107178
Type: 96242 cord grip
Ref. No.: 107177

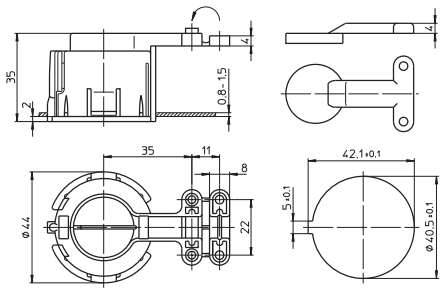



Cover caps
Material: PA GF
With integrated cord grip
For leads H03VV-F 2X0.5 or
H03VV-F 2X0.75
Weight: 6.6/5.8 g, unit: 500 pcs.
Type: 83283
Ref. No.: 504769 white
Ref. No.: 507075 black

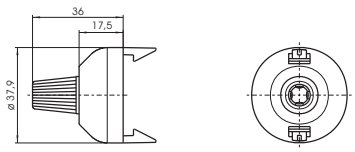



Table Lamp Set

For E27 lampholders, one-piece

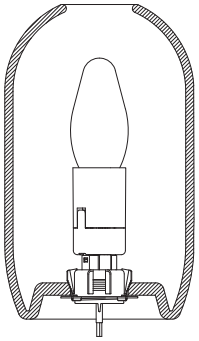

For E27 lampholders type 64401 (s. p. 431)
For glass with hole: Ø 40–45 mm
Material: PA

Fixing insert for cover cap 534090
For glass with hole: Ø 40–45 mm,
wall thickness: 3–10 mm
Weight: 6.9 g, unit: 500 pcs.
Type: 97658
Ref. No.: 534087 natural

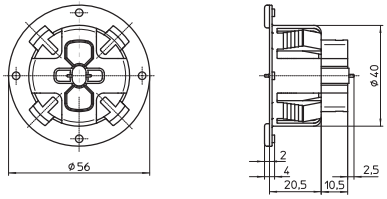



Screw ring for fixing insert
External thread 38×2.5
Weight: 3.4 g, unit: 500 pcs.
Type: 97701
Ref. No.: 534088 natural

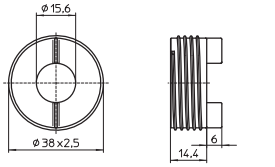

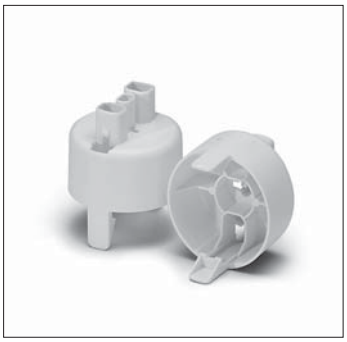

Cover cap for E27 lampholders
Suitable for fixing insert 534087
With cord grip for lead H03VVH2-F
Weight: 5.4 g, unit: 500 pcs.
Type: 97700
Ref. No.: 534090 white

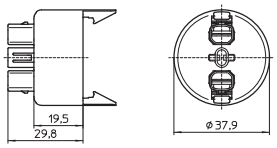

E27 Renovation Kit Lampholders

For incandescent lamps with base E27

E27 renovation kit lampholders with suspension
Profiled shaped lampholder 64770 – T180
Cover cap with cord grip 532394
Nominal rating: 4/250
Lead: Cu, stranded conductors 0.75 mm², double PVC-insulation, length: 150 mm
Weight: 25.8/26.2 g, unit: 150 pcs.
Type: 64770
Ref. No.: 532399 black, with screw terminal
Ref. No.: 533991 black, with push-in terminal

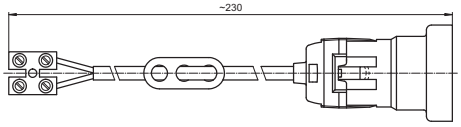



E27 Thermoplastic Lampholders, Three-piece

For incandescent lamps with base E27

Nominal rating: 4/250
Temperature marking: T190
Brass-finished versions are available on request.



Inserts
Material: PET GF, black
Casing lock
Weight: 5.7/6.1 g, unit: 500 pcs.
Type: 83285 push-in terminals: 0.5–1.5 mm²
Ref. No.: 103643
Type: 83011 screw terminals: 0.5–2.5 mm²
Ref. No.: 103520







Plain casings
Material: PET GF
Weight: 14.5/14.3 g, unit: 500 pcs.
Type: 83000
Ref. No.: 103468 white
Ref. No.: 103467 black

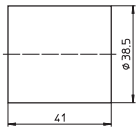

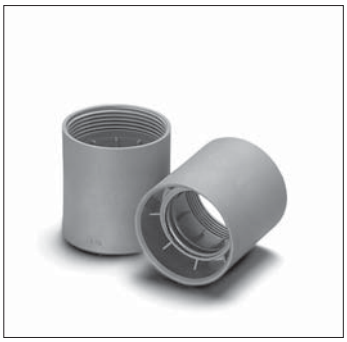

Threaded casings 40x2.5 IEC 60399
Material: PET GF
Weight: 17/16.1 g, unit: 500 pcs.
Type: 83002
Ref. No.: 103484 white
Ref. No.: 103483 black

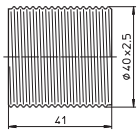



Threaded casings 40x2.5 IEC 60399
With flange
Material: PET GF
Weight: 16.7/17 g, unit: 500 pcs.
Type: 83173
Ref. No.: 103570 white
Ref. No.: 103569 black

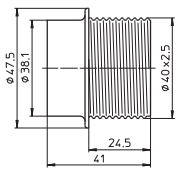



Caps
Material: PA GF
Profiled hole: Ø 10.5x8.6 mm
Fixing holes for screws M4
Height: 13.8 mm
Weight: 5.6/6 g, unit: 500 pcs.
Type: 96148
Ref. No.: 109188 white
Ref. No.: 109187 black

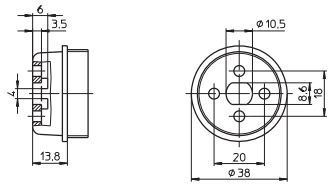



Caps
Material: PA GF
Female nipple: M10x1
Height: 17 mm
Weight: 9.8/10.1 g, unit: 500 pcs.
Type: 83007
Ref. No.: 109052 white
Ref. No.: 109039 black

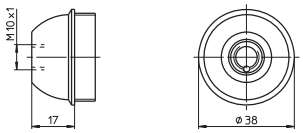



Caps with earth terminal
Material: PA GF
Female nipple: M10x1
Height: 17 mm
Weight: 10.7/11 g, unit: 500 pcs.
Type: 83035
Ref. No.: 109098 white
Ref. No.: 109099 black

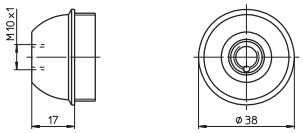



Caps
Material: PA GF
Moulded thread: M10x1
Rotation stop: external
Height: 17 mm
Weight: 6.7/7 g, unit: 500 pcs.
Type: 96147
Ref. No.: 109195 white
Ref. No.: 109196 black

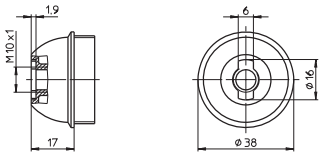



Caps
Material: PA GF
Moulded thread: M10x1
Rotation stop: external
With locking screw
Height: 17 mm
Weight: 7.1/7.3 g, unit: 500 pcs.
Type: 83293
Ref. No.: 109087 white
Ref. No.: 109074 black

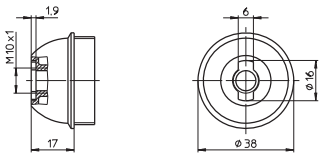



Caps
Material: PA GF
Round hole: Ø 10.5 mm
Rotation stop: internal and external
Height: 17 mm
Weight: 5.9/6.6 g, unit: 500 pcs.
Type: 96154
Ref. No.: 109190 white
Ref. No.: 109191 black

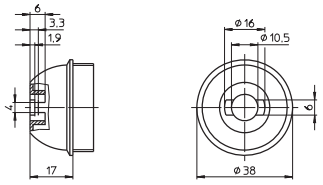



Caps
Material: PA GF
Profiled hole: Ø 10.3 mm
Rotation stop: internal and external
Height: 17 mm
Weight: 5.9/6.6 g, unit: 500 pcs.
Type: 96124
Ref. No.: 109559 white
Ref. No.: 109512 black

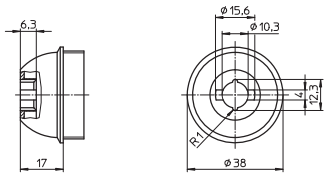



Caps
Conical shape
Material: PA GF
Female nipple: M10x1
Height: 19.2 mm
Weight: 14.2/15.2 g, unit: 500 pcs.
Type: 83274
Ref. No.: 109081 white
Ref. No.: 109093 black

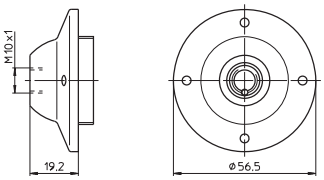



Caps
Conical shape
Material: PA GF
Round hole: Ø 10.5 mm
Rotation stop: internal
Height: 19.2 mm
Weight: 10.4/10.6 g, unit: 500 pcs.
Type: 96172
Ref. No.: 109060 white
Ref. No.: 109044 black

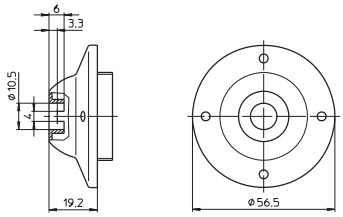



E27 Porcelain Lampholders

For incandescent lamps with base E27

E27 lampholders, one-piece
Material: porcelain, white, T270
Nominal rating: 4/250/5 kV
Screw terminals: 0.5–2.5 mm²
Spring loaded central contact
Fixing oblong holes for screws M4
Weight: 60.6 g, unit: 250 pcs.
Type: 62050
Ref. No.: 102599
Type: 62010 with lamp safety catch (with spring)
Ref. No.: 102577
Type: 62009 with lamp safety catch (with crushing)
new **Ref. No.: 544605**

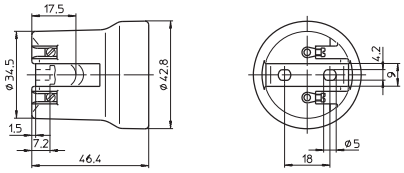



E27 lampholder, one-piece
Material: porcelain, white, T270
Nominal rating: 4/250/5 kV
Screw terminals: 0.5–2.5 mm²
Spring loaded central contact
Fixing pillars for screws M3
Weight: 66.3 g, unit: 250 pcs.
Type: 62015
Ref. No.: 102582

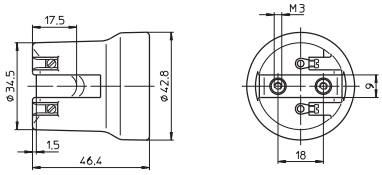



E27 lampholder, one-piece
Material: porcelain, white, T270
Nominal rating: 4/250/5 kV
Screw terminals: 0.5–2.5 mm²
Spring loaded central contact
Fixing oblong holes for screws M4
Weight: 60.5 g, unit: 200 pcs.
Type: 62070
new **Ref. No.: 543304**

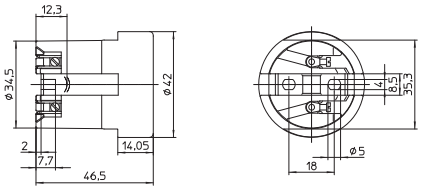



E27 lampholder, one-piece
Material: porcelain, white, T270
Nominal rating: 4/250/5 kV
Screw terminals: 0.5–2.5 mm²
With lateral fixing flange,
tilt angle: 15°
Spring loaded central contact
Fixing hole for screw M4
Weight: 67.6 g, unit: 200 pcs.
Type: 62415
Ref. No.: 543414

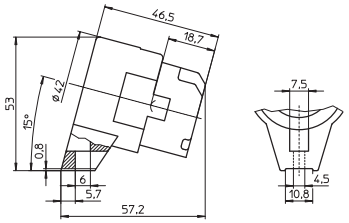



E27 lampholder, one-piece, for cover caps (see p. 435)
Material: porcelain, white, T270
Nominal rating: 4/250/5 kV
Screw terminals: 0.5–2.5 mm²
Spring loaded central contact
Fixing oblong holes for screws M4
Weight: 66.5 g, unit: 250 pcs.
Type: 62310
Ref. No.: 102624

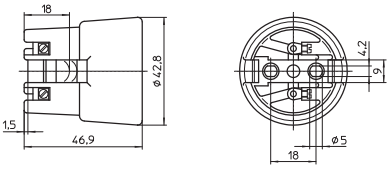



E27 lampholder
For cover caps type 80010, 97735 and 97742 (see below)
Material: porcelain, white, T270
Nominal rating: 4/250/5 kV
Screw terminals: 0.5–2.5 mm²
Spring loaded central contact
Fixing holes for screw M4
Weight: 66.5 g, unit: 250 pcs.
Type: 62370
Ref. No.: 543303

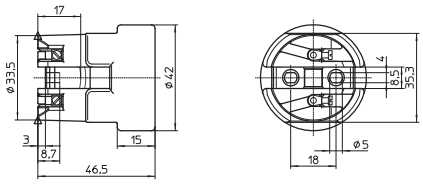



Cover caps for lampholder 543303
Material: PA GF
Weight: 12.5/12.5/10/10 g, unit: 500 pcs.
Type: 97735 moulded thread: M10x1, without locking screw
Ref. No.: 536445 black
Ref. No.: 536446 white
Type: 97742 moulded thread: M10x1, with lateral hole, without locking screw
Ref. No.: 535247 black
Type: 80010 female nipple: G3/8A
Ref. No.: 535694 white

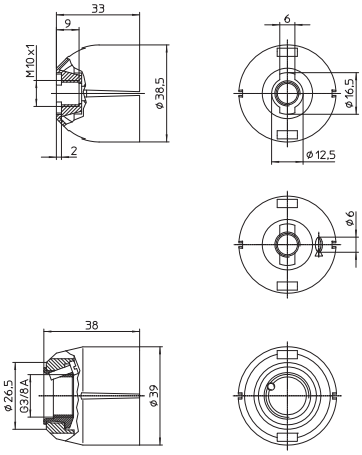



E27 lampholder, three-piece
Material: porcelain, white, T240, nominal rating: 4/250, screw terminals: 0.5–2.5 mm²
Weight: 116/125/116/125/121.7/130.7 g
Unit: 25 pcs.
Type: 62061 female nipple: M10x1
Ref. No.: 535684
Ref. No.: 535685 with earth screw
Type: 62062 female nipple: M13x1
Ref. No.: 536451
Ref. No.: 536452 with earth screw
Type: 62063 female nipple: G3/8A
Ref. No.: 534832
Ref. No.: 534833 with earth screw

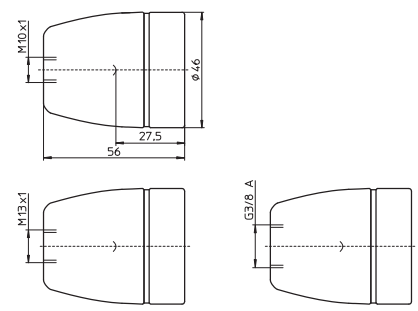



E27 lampholder, two-piece
With screws for assembling
Material: porcelain, white, T210
Nominal rating: 4/500
Screw terminals: 0.5–2.5 mm²
Fixing holes for screw M4
Weight: 122 g, unit: 10 pcs.
Type: 62700
Ref. No.: 534835

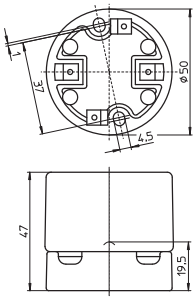



E27 Metal Lampholders, Three-piece

For incandescent lamps with base E27

Nominal rating: 4/250
Type: 670 plain casing
Type: 671 threaded casing 40x2.5
Temperature marking: T240



Inserts
Material: porcelain, white
Screw terminals: 0.5–2.5 mm²
Spring loaded central contact, casing lock
Weight: 22.8/23.3 g, unit: 500 pcs.
Type: 83221
Ref. No.: 103595
Type: 83223 with earth terminal
Ref. No.: 103597





Plain casings
Material: zinc-coated polished steel
Weight: 23.5/22.9/27.1/27.1g
Unit: 500 pcs.
Type: 83218 insulating threaded ring: PPS
Ref. No.: 103582 chrome-finish
Ref. No.: 103583 brass-finish
Type: 83226 insulating threaded ring: steatite
Ref. No.: 504640 chrome-finish
Ref. No.: 504641 brass-finish

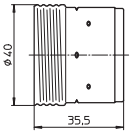



Threaded casings 40x2.5 IEC 60399
Material: zinc-coated polished steel
Weight: 24/23.1/27.3/27.6 g
Unit: 500 pcs.
Type: 83219 insulating threaded ring: PPS
Ref. No.: 103590 chrome-finish
Ref. No.: 103591 brass-finish
Type: 83227 insulating threaded ring: steatite
Ref. No.: 504643 chrome-finish
Ref. No.: 504644 brass-finish

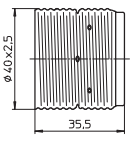



Caps
Material: zinc-coated polished steel
Female nipple: M10x1
Weight: 10.6/10.8/11.4/11.3 g
Unit: 500 pcs.
Type: 80342
Ref. No.: 103020 chrome-finish
Ref. No.: 103021 brass-finish
Type: 80343 with earth terminal
Ref. No.: 103026 chrome-finish
Ref. No.: 103027 brass-finish

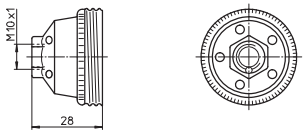



Caps
Material: zinc-coated polished steel
Female nipple: M10x1
With lateral hole: Ø 7 mm
Weight: 10/10/11/11 g, unit: 500 pcs.
Type: 80345
Ref. No.: 103031 chrome-finish
Ref. No.: 103032 brass-finish
Type: 80353 with earth terminal
Ref. No.: 103042 chrome-finish
Ref. No.: 103043 brass-finish

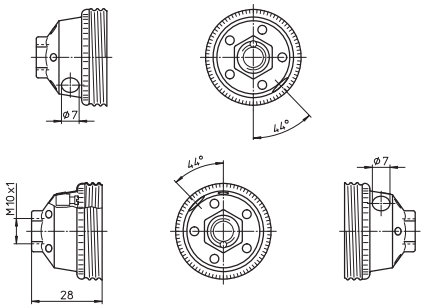



E27 Thermoplastic Pull-switch Lampholders

For incandescent lamps with base E27

Nominal rating: 2/250
Type: 65300 plain casing, with pull cord
Type: 65308 plain casing, with draw chain

Type: 65400 threaded casing 40x2.5, with pull cord
Type: 65408 threaded casing 40x2.5, with draw chain



Insert with pull cord
Material: PET GF, black
Screw terminals: 0.5–2.5 mm²
Length of cord: 250 mm
Weight: 12.3 g, unit: 500 pcs.
Type: 83146
Ref. No.: 507802
End button for pull cord, material: PS, white
Weight: 0.8 g, unit: 500 pcs.
Type: 96010
Ref. No.: 105144

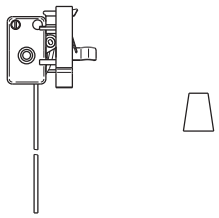



Insert for brass chain
Material: PET GF, black
Screw terminals: 0.5–2.5 mm²
Weight: 11.7 g, unit: 500 pcs.
Type: 83147
Ref. No.: 507803
Draw chain with end button
Material: brass, length of chain: 85 mm
Weight: 3.9 g, unit: 500 pcs.
Type: 94304
Ref. No.: 104928

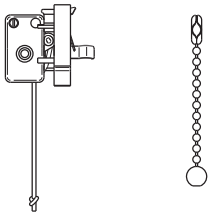



Plain casings
Material: PET GF
Weight: 11.7 g, unit: 500 pcs.
Type: 96033
Ref. No.: 105179 white
Ref. No.: 109280 black

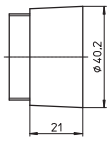

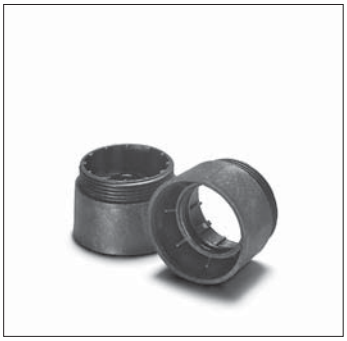

Threaded casings 40x2.5 IEC 60399
Material: PET GF
Weight: 9.3 g, unit: 500 pcs.
Type: 96034
Ref. No.: 105185 white
Ref. No.: 109281 black

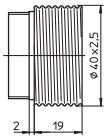



Caps
Material: PET GF
Female nipple: M10x1
Weight: 19.8/19.4 g, unit: 500 pcs.
Type: 83258
Ref. No.: 109282 white
Ref. No.: 109283 black

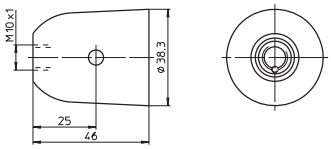



Flange rings
For pull-switch lampholders type 654
Material: PA GF
Ø 60 mm, height: 6.5 mm
Weight: 3/3.1 g, unit: 500 pcs.
Type: 08400
Ref. No.: 501351 white
Ref. No.: 501352 black

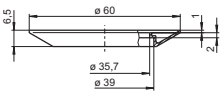



E27 Metal Pull-switch Lampholders

For incandescent lamps with base E27

Nominal rating: 2/250
Type: 55204 plain casing, with pull cord
Type: 55203 plain casing, with draw chain
Type: 55304 threaded casing 40x2.5, with pull cord
Type: 55303 threaded casing 40x2.5, with draw chain



Insert with pull cord
Material: porcelain, white
Screw terminals: 0.5–2.5 mm²
Length of cord: 250 mm, casing lock
Weight: 28 g, unit: 500 pcs.
Type: 83006
Ref. No.: 103504
End button for pull cord, material: PS, white
Weight: 0.8 g, unit: 500 pcs.
Type: 96010
Ref. No.: 105144

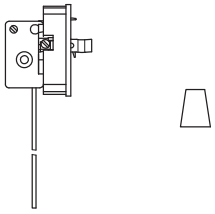



Insert for brass chain
Material: porcelain, white
Screw terminals: 0.5–2.5 mm²
Weight: 29.4 g, unit: 500 pcs.
Type: 83008
Ref. No.: 103515
Draw chain with end button
Material: brass, length of chain: 85 mm
Weight: 3.9 g, unit: 500 pcs.
Type: 94304
Ref. No.: 104928

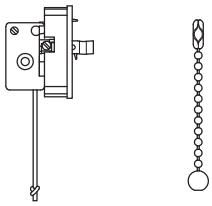



Casings
Material: brass, passivated
Insulating threaded ring: PPS
Weight: 21.5/22.7 g, unit: 500 pcs.
Type: 83218 plain casing
Ref. No.: 103587
Type: 83219 threaded casing 40x2.5
Ref. No.: 103594

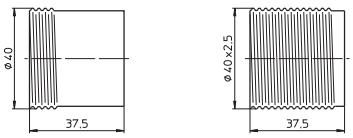

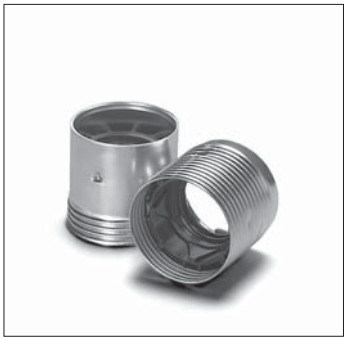

Cap with earth terminal
Material: brass, passivated
Female nipple: M10x1
With insulating insert
Weight: 20 g, unit: 500 pcs.
Type: 80014
Ref. No.: 102956

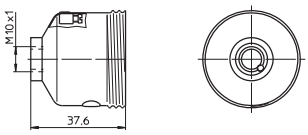



E27 Thermoplastic Rocker Switch Lampholders



For incandescent lamps with base E27

Nominal rating: 2/250
Temperature marking: T180
Suitable casings see page 437:
Type: 83000 plain casing
Type: 83002 threaded casing 40×2.5
Type: 83173 threaded casing 40×2.5, with flange



Inserts with switch
Material: PET GF, white
Screw terminals: 0.5–2.5 mm²
Weight: 11/11.1 g, unit: 500 pcs.
Type: 83015
Ref. No.: 107331 switch, white
Ref. No.: 107096 switch, black

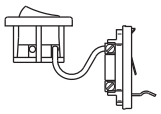



Caps
Material: PA GF
Female nipple: M10x1
Weight: 14.2/14.7 g, unit: 500 pcs.
Type: 83260
Ref. No.: 109198 white
Ref. No.: 109199 black

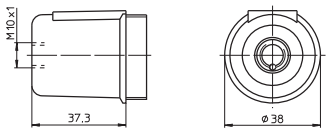



Caps
Material: PA GF
Profiled hole: Ø 10.4 mm
Rotation stop: internal and external
Weight: 8.2/10.4 g, unit: 500 pcs.
Type: 96229
Ref. No.: 109200 white
Ref. No.: 109201 black

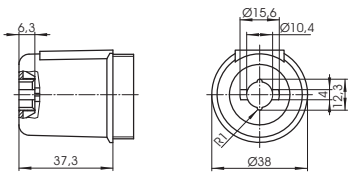

E27 Thermoplastic Rotary Switch Lampholders

For incandescent lamps with base E27

Nominal rating: 2/250
Temperature marking: T180
Suitable casings see page 437:
Type: 83000 plain casing
Type: 83002 threaded casing 40x2.5
Type: 83173 threaded casing 40x2.5, with flange



Insert with rotary switch
Material: PET GF, white
Screw terminals: 0.5–2.5 mm²
Weight: 19.2 g, unit: 500 pcs.
Type: 83001
Ref. No.: 506943

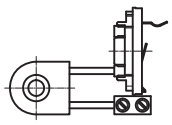



Caps for E27 rotary switch lampholder
Material: PA GF
Female nipple: M10x1
Weight: 14.7/15.1 g, unit: 500 pcs.
Type: 83005
Ref. No.: 507177 white
Ref. No.: 507178 black

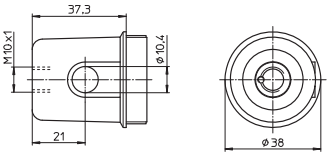



E27 Festoon Lampholders

For lighting chains of protection class II

Degree of protection: IP44
Type: 64710/11
The lampholders may only be operated with the lamp pointing downwards and with a gasket.

E27 festoon lampholder
For lamps max. 40 W
Material: PBT GF, black
Nominal rating: 4/250
Blade contacts
for festoon lead H05RN H2-F 2X1.5
To be used only with protection cap
Weight: 13.8 g, unit: 500 pcs.
Type: 83297
Ref. No.: 109158

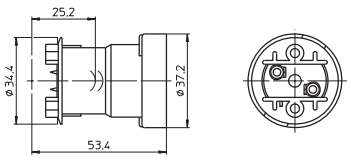



new

Protection cap
For E27 festoon lampholders
Material: PA GF, black
With ready-fitted stainless screws
Weight: 6.3 g, unit: 500 pcs.
Type: 83300 with non-removable screws
Ref. No.: 109243

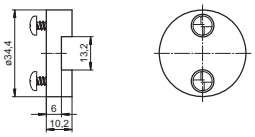



Protection cap
For E27 festoon lampholders
Material: PA GF, black
With ready-fitted stainless screws
Fixing holes for screws M4
Weight: 7.2 g, unit: 500 pcs.
Type: 83301 with non-removable screws
Ref. No.: 502515

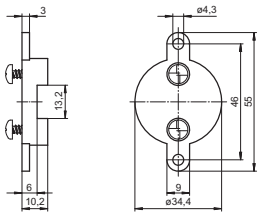



Gasket
For E27 festoon lampholders
Material: silicone
Weight: 4 g, unit: 500 pcs.
Type: 98006
Ref. No.: 106817

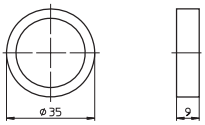



B22d Lampholders, Accessories

For mains voltage halogen incandescent lamps

B22d lampholders
For cover caps (see p. 433–435)
Nominal rating: 2/250
Push-in twin terminals: 0.5–1.5 mm²
Fixing holes for self-tapping screws
acc. to ISO 1481/7049-ST3.9-C/F
Weight: 12.7/12.3 g, unit: 500 pcs.
Type: 64800
Ref. No.: 108748 PET GF, T180, white
new **Ref. No.: 544621** PET GF, T210, white

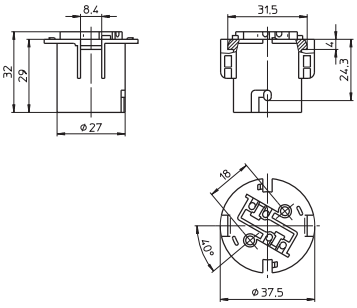



Plain casing
For B22d lampholders type 64800
For cover caps (see p. 433–435)
Threaded casing on request
Material: PA GF, white
Weight: 14.5 g, unit: 500 pcs.
Type: 96021
Ref. No.: 504749

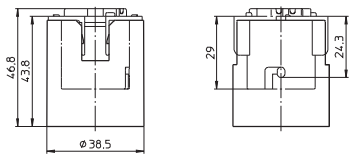



B22d lampholder
With protection flange
For cover caps type 80010, 97735
and 97742 (see below)
Casing: porcelain, white, T240
Nominal rating: 2/250
Screw terminals: 0.5–2.5 mm²
Fixing holes for screws M3
Weight: 84.7 g, unit: 150 pcs.
Type: 64900
Ref. No.: 535673

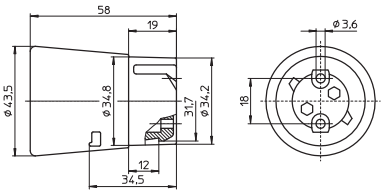



B22d lampholder
Casing: porcelain, white, T240
Nominal rating: 2/250
Screw terminals: 0.5–2.5 mm²
Lateral fixing bracket
Tilt angle: 15°
Fixing hole for screws M4
Weight: 70 g, unit: 150 pcs.
Type: 64940
Ref. No.: 535674

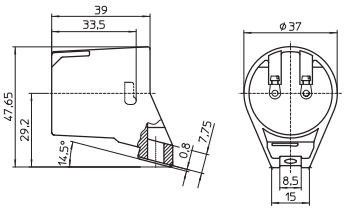



Cover caps for lampholder 535673
Material: PA GF
Weight: 12.5/12.5/10/10 g, unit: 500 pcs.
Type: 97735 moulded thread: M10x1,
without locking screw
Ref. No.: 536445 black
Ref. No.: 536446 white
Type: 97742 moulded thread: M10x1,
with lateral hole, without locking screw
Ref. No.: 535247 black
Type: 80010 female nipple: G3/8A
Ref. No.: 535694 white

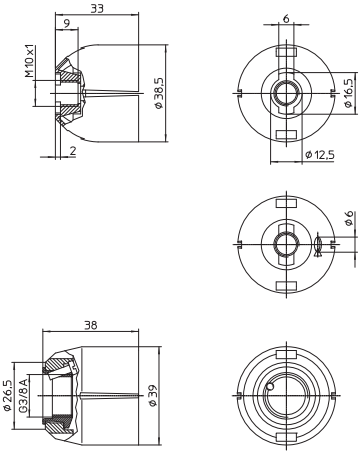



Accessories

For E14, E27 lampholders, one-piece and three-piece and B22d lampholders

The luminaire manufacturer is responsible for the right choice of accessories.
Brass-finished versions are available on request.

Plastic screw rings
For E14 lampholders
with external thread 28 x 2 IEC 60399
Weight: 3.6/3.2/1.8/1.6 g, unit: 1000 pcs.
Type: 03210 Ø 43 mm, height: 15 mm
Ref. No.: 100125 PET GF, white
Ref. No.: 109162 PA GF, black
Type: 05202 Ø 34 mm, height: 7.5 mm
Ref. No.: 107154 PET GF, white
Ref. No.: 109166 PA GF, black

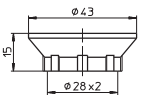

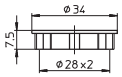



Metal screw ring
For E14 lampholders
with external thread 28 x 2 IEC 60399
Material: zinc-coated polished steel, chrome-finish
Ø 40 mm, height: 12 mm
Weight: 4.3 g, unit: 500 pcs.
Type: 06700
Ref. No.: 100194

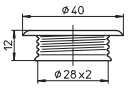



Metal screw ring with flange
For E14 lampholders
with external thread 28 x 2 IEC 60399
Material: zinc-coated polished steel, chrome-finish
Imprinted: max. 40 W
With leaf springs
For glass with hole: Ø 34–42 mm
Weight: 11 g, unit: 500 pcs.
Type: 17400
Ref. No.: 100417

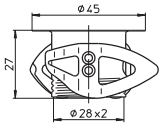



Metal screw ring with flange
For E14 lampholders
with external thread 28 x 2 IEC 60399
Material: zinc-coated polished steel, chrome-finish
With basket springs
For glass with hole: Ø 38–41 mm
Weight: 12.3 g, unit: 500 pcs.
Type: 17803
Ref. No.: 108847

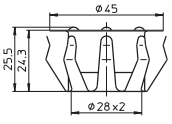



Front gasket
For E14 lampholders type 64305, 64306, 64308, 64313, 64316, 64360, 64380 and 64381
As lamp safety catch and for protection against moisture acc. to IEC 60079-15
Material: elastomer
Weight: 1.1 g, unit: 2000 pcs.
Type: 98013
Ref. No.: 534689

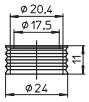



Plastic screw rings
For E27 and B22d lampholders
Weight: 4.9/4.4/3.3/3 g, unit: 500 pcs.
Type: 08610 Ø 55 mm, height: 15 mm
Ref. No.: 100270 PET GF, white
Ref. No.: 109285 PA GF, black
Type: 08701 Ø 47.8 mm, height: 9 mm
Ref. No.: 100273 PET GF, white
Ref. No.: 109291 PA GF, black

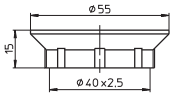

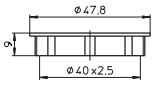



Metal screw ring
For E27 and B22d lampholders
Material: zinc-coated polished steel, chrome-finish
Ø 56.5 mm, height: 13 mm
Weight: 7 g, unit: 500 pcs.
Type: 07400
Ref. No.: 100217

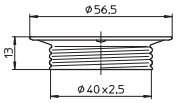



Brackets for E14 lampholders
For fastening with nipples 109249, 109247
Material: zinc-coated polished steel
Fixing holes for screws M3
Weight: 5.5/5.3/5.3 g, unit: 1000 pcs.
Type: 94068 internal bracket 90°
Ref. No.: 106767
Type: 94066 external bracket 90°
Ref. No.: 400671
Type: 94069 internal bracket 110°
Ref. No.: 106768

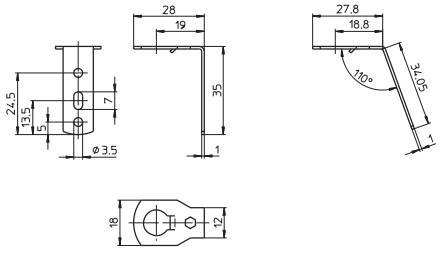



Bracket 90° for E14 lampholders
For fastening with nipples 109249, 109247
Material: zinc-coated polished steel
Fixing holes for screws M3
Weight: 6.2/8.5/8.5 g, unit: 1000 pcs.
Type: 94074 external bracket 18.5x33 mm
Ref. No.: 106802 holes diagonal
Type: 94067 external bracket 24x41.5 mm
Ref. No.: 106766 holes vertical
Type: 94079 internal bracket 24x41.5 mm
Ref. No.: 506211 holes vertical

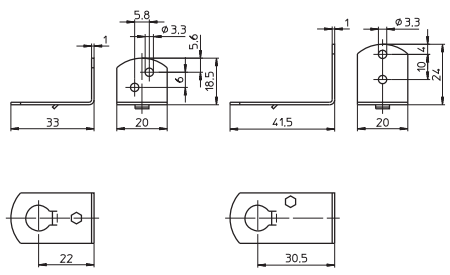



U-shaped clips
For E27 lampholders, one-piece
Material: zinc-coated polished steel, chrome-finish
For wall thickness: 0.5–2 mm
Weight: 3.7/4.3 g, unit: 2500 pcs.
Type: 94435
Ref. No.: 109621
Type: 80433 with earth terminal
Ref. No.: 103087

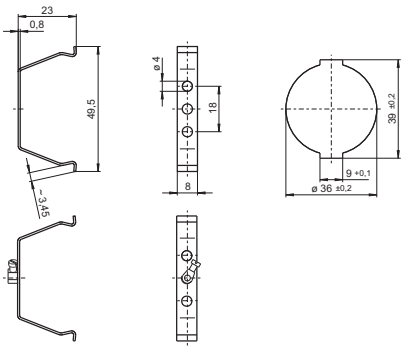



Base clips
For E14 and E27 lampholders, one-piece
Material: zinc-coated polished steel, chrome-finish
For wall thickness: 0.8–1.5 mm
Weight: 3.3/4 g, unit: 2500 pcs.
Type: 94436
Ref. No.: 109622
Type: 80474 with earth terminal
(without drawing)
Ref. No.: 400699

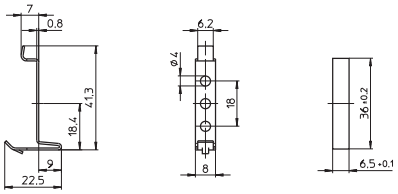



Brackets: 90°, 12.5×47.1 mm
For E14 and E27 lampholders, one-piece
Material: zinc-coated polished steel, chrome-finish
Fixing hole for screw M5
Weight: 5.6/4.8 g, unit: 500 pcs.
Type: 80475 with earth terminal
Ref. No.: 400779
Type: 94444
Ref. No.: 401536

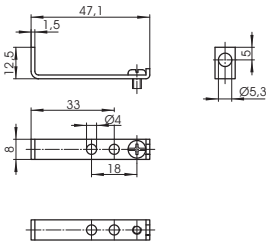



Brackets: 100°, 22.9×36.6 mm
For E14 and E27 lampholders, one-piece
Material: zinc-coated polished steel, chrome-finish
Fixing holes for self-tapping screws
acc. to ISO 1481/7049-ST2.9-C/F
Tapped hole M4
Weight: 5.5/4.6 g, unit: 1000 pcs.
Type: 80476 with earth terminal
Ref. No.: 400772
Type: 94438
Ref. No.: 401549

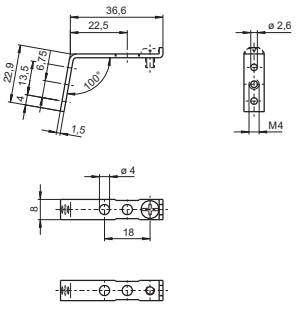



Fixing bracket
For E14 and E27 lampholders, one-piece
Material: zinc-coated polished steel, chrome-finish
With slots for screws M4
Weight: 4.6 g, unit: 1000 pcs.
Type: 94450
Ref. No.: 106829

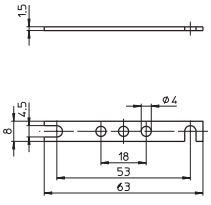



Fixing bracket: 90°, 21x40 mm
For E14 and E27 lampholders, one-piece
Material: zinc-coated polished steel, chrome-finish
Fixing holes for screws M3
Weight: 5.2 g, unit: 1000 pcs.
Type: 94448
Ref. No.: 537628

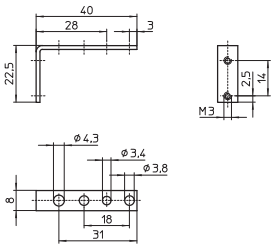



Fixing bracket: 8°
For E27 thermoplastic lampholders type 64719 (see p. 431) and for B22d thermoplastic lampholders type 648 (see p. 448)
For clicking-on onto the lampholder
Material: PA, white
Oblong hole for screw M4
Weight: 1.9 g, unit: 500 pcs.
Type: 97194
Ref. No.: 108956

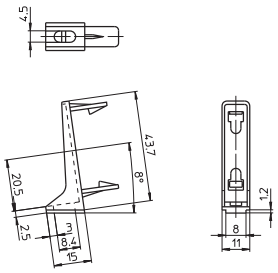



Fixing brackets: 8°, 14.5x39 mm
For E27 thermoplastic lampholders, one-piece
Material: PET GF, white
With cable holder
Oblong hole for screw M4
Weight: 3/3.6 g, unit: 1000 pcs.
Type: 97750 fixing holes: Ø 4 mm
Ref. No.: 109725
Type: 97752 fixing holes for self-tapping screws acc. to ISO 1481/7049-ST3.9-C/F
Ref. No.: 109728

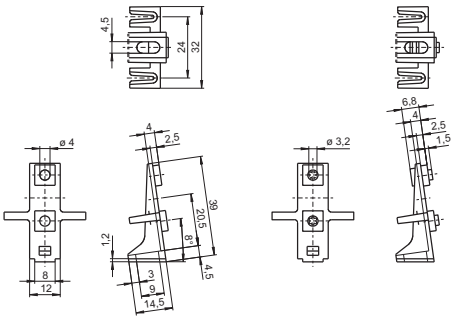



Fixing brackets: 8°, 14.4x39 mm
For E27 thermoplastic lampholders, one-piece
Material: PET GF, white
Oblong hole for screw M4
Weight: 1.9/4.3 g, unit: 1000 pcs.
Type: 97159 fixing holes: Ø 4 mm
Ref. No.: 108304
Type: 97755 fixing holes for self-tapping screws acc. to ISO 1481/7049-ST3.9-C/F
Ref. No.: 400732

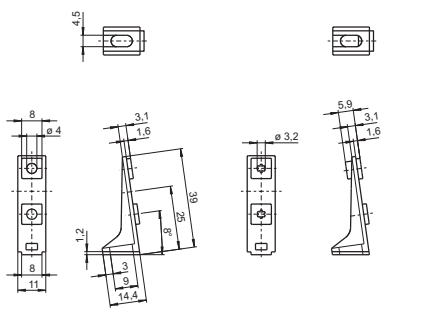



Fixing bracket: 8°, 20x44.4 mm
For E27 thermoplastic lampholders, one-piece
Material: PET GF, white
Fixing holes: Ø 4 mm
With cable holder
Oblong hole for screw M4
Weight: 3.7 g, unit: 1000 pcs.
Type: 97754
Ref. No.: 401970

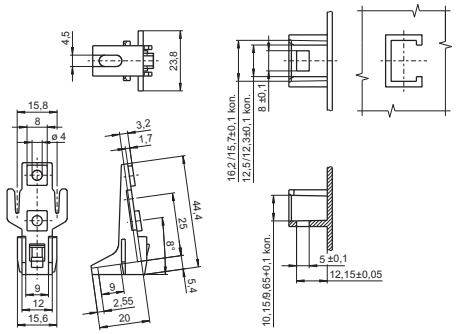



Nipples
For E14 cover caps with moulded thread: M10x1
Cross groove for rotation stop: external
For E27 caps (see p. 438–439), for fastening of brackets 106766 and 106802 (see p. 451)
Material: PA, white
Male nipple: M10x1, with hexagon flange
Weight: 0.5 g, unit: 1000 pcs.
Type: 09700/09703/09708
Ref. No.: 538089 length: 15 mm
Ref. No.: 109249 length: 10 mm
Ref. No.: 109247 length: 7 mm

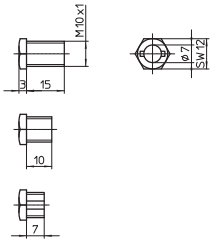



Locking nut for thread M10x1
Material: PA GF
Weight: 0.9 g, unit: 1000 pcs.
Type: 97267
Ref. No.: 507797 white
Ref. No.: 507798 black

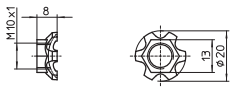



Cord grip with insulating socket
For E14 and E27 lampholders
Material: PA, natural
For luminaires of protection class II
For leads H03VVH2-F 2X0.75
Weight: 0.6 g, unit: 1000 pcs.
Type: 97632
Ref. No.: 534097

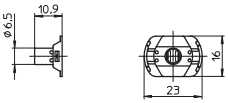



Cable grips
For leads: H03VV-F
Material: PA
Male nipple: M10x1, length: 10 mm
With locking screw
Weight: 0.6 g, unit: 1000 pcs.
Type: 09701
Ref. No.: 543640 white
Ref. No.: 543641 black

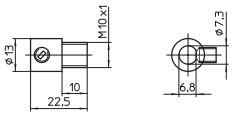



Cable grips
For leads H03VV-F and H03VVH2-F 2X0.5 or 2X0.75
Material: PA
Male nipple: M10x1, length: 11 mm
With locking screw
Weight: 1.6/1.5 g, unit: 1000 pcs.
Type: 09701
Ref. No.: 109248 white
Ref. No.: 109253 black

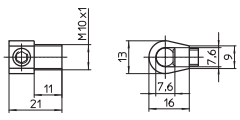



Cord grip
For E14 lampholders, three-piece,
with cap height: 19 mm
For leads H03VVH2-F
Material: PA, transparent
Weight: 0.6 g, unit: 1000 pcs.
Type: 09501
Ref. No.: 106948





Cord grip
For E27 lampholders, three-piece (without switch)
For leads H03VVH2-F
Weight: 0.9 g, unit: 1000 pcs.
Type: 09502
Ref. No.: 106949 PA, transparent
Insulating socket
Material: PA, transparent
Weight: 0.5 g, unit: 1000 pcs.
Type: 09705
Ref. No.: 109592

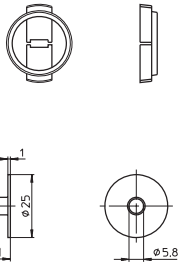



Cord grips
For leads H03VV-F 2X0.5 or
H03VV-F 2X0.75
Material: PA
Weight: 0.9/0.8/1.7/1.6 g, unit: 1000 pcs.
Type: 09606 cord grips
Ref. No.: 506026 white
Ref. No.: 506027 black
Type: 96160 screw caps
Ref. No.: 109318 white
Ref. No.: 109317 black

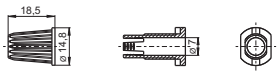



Cord grips
For leads H03VV-F 2X0.5 or
H03VV-F 2X0.75
Material: PA, male nipple: M10x1
Weight: 1/0.9/1.7/1.6 g, unit: 1000 pcs.
Type: 09607 cord grips
Ref. No.: 506024 white
Ref. No.: 506020 black
Type: 96160 screw caps
Ref. No.: 109318 white
Ref. No.: 109317 black

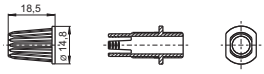



Insulating socket for E14 lampholders
Material: PA, transparent
Weight: 1 g, unit: 1000 pcs.
Type: 09704
Ref. No.: 109600

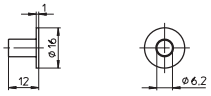



E40 Porcelain Lampholders

For incandescent lamps with base E40

Nominal rating: 18/500/5 kV
Screw terminals: 1.5–4 mm²
Spring loaded central contact

E40 lampholders
Material: porcelain, white, T270
Oblong holes for screws M5
Weight: 224/229.3/224/229.3 g
Unit: 48 pcs.
Type: 12800/12801
Ref. No.: 108208
Ref. No.: 107780 with lamp safety catch
With steel thread
Ref. No.: 532602
Ref. No.: 532603 with lamp safety catch

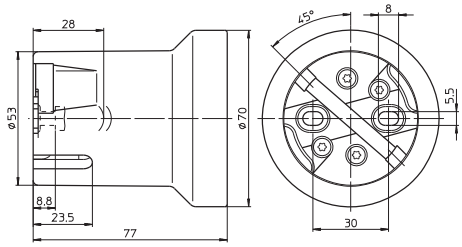



E40 lampholders
Material: porcelain, white, T270
Fixing bracket with slots for screws M5
Weight: 252.3/243/252.3/243 g
Unit: 48 pcs.
Type: 12810/12811
Ref. No.: 108374
Ref. No.: 108375 with lamp safety catch
With steel thread
Ref. No.: 532604
Ref. No.: 532605 with lamp safety catch

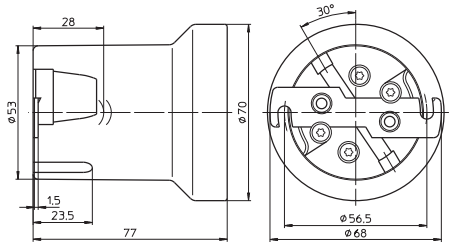



E40 lampholders
Material: porcelain, white, T270
Fixing bracket with tapped holes
for screws M5
With lamp safety catch
Weight: 252.8 g, unit: 48 pcs.
Type: 12812
Ref. No.: 108373
With steel thread
Ref. No.: 532606

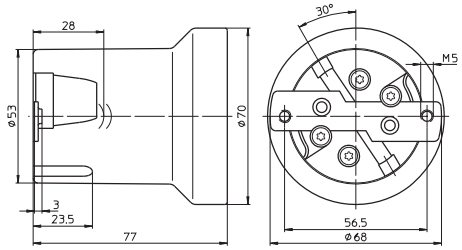



5 Components for Incandescent and Retrofit Lamps

Transformers and converters for low-voltage halogen lamps 458
Dimmability of VS transformers and VS converters 459

Electronic converters **459**
Assembly instructions – Electronic converters 460–464
DALI information 464

Electromagnetic transformers **465**
Assembly instructions – Electromagnetic transformers 466–468
Conductors for low-voltage halogen installations 468–469

Lampholders for incandescent lamps **469–470**

General technical details **533–540**

Glossary **541–543**

Transformers and converters for low-voltage halogen lamps

Operating low-voltage halogen lamps depends on operating devices that transform the usual mains voltage of 230 V to under 24 V. Safety transformers, of either electromagnetic or electronic (converter) design, have been in almost exclusive use for several years now. The type plate of electromagnetic transformers bears the symbol for safety transformers in accordance with VDE 0570, corresponding to EN 61558. Electronic converters are marked with the sign for Safety Extra-Low Voltage (SELV), which indicates that the product is an isolating converter whose secondary output is safe to touch even during no-load operation.

All Vossloh-Schwabe transformers are safety transformers, i.e. isolation transformers for supplying SELV (safety extra-low voltage) and PELV (protection extra-low voltage) circuits. With such systems, the voltage must not exceed a value of 50 V AC or 120 V DC (smoothed) between the conductors or a conductor and the earth conductor of a circuit that is separated from the mains by a safety transformer. The specified values apply for protected (non-touchable) voltages; 25 V AC and 60 V DC (smoothed) apply for exposed (touchable) voltages.

Depending on their design features to protect against touchable live parts, transformers and converters fall into one of two protection classes. Operating devices of protection class I are base-insulated and have a protective earth conductor connection terminal that must be connected to the protective earth conductor for safety reasons. Isolating transformers and converters of protection class II are equipped with double or reinforced insulation that protects against dangerous casing currents; these operating devices are solely available as independent operating devices (also see page 538; Protection Classes of Luminaires and Operating Devices).

Electronic converters can also be fitted with a functional earth terminal that must be connected to a functional earth to ensure compliance with EMC requirements. In addition, some electronic converters are designed in such a way that neither a protective earth conductor nor a functional earth needs to be connected.

Operating devices can also be differentiated according to the way they are used. Built-in transformers have to be installed in a permanent casing, e.g. a luminaire. In contrast, so-called independent transformers and converters can be operated independently of a luminaire. These are often found in ceiling installations; in order to prevent possible noise development, isolation transformers must be mounted in such a way as to avoid vibration transmission.

Transformers or converters bearing the MM mark can be mounted on surfaces of unknown flammability, which can be the case when mounting these devices on wooden furniture elements. Such devices comply with the temperature requirements of VDE 0710, part 14, of < 95 °C during normal and < 115 °C during abnormal operation.

Converters are labelled with a tc point. The stipulated temperature (e.g. 75 °C) must not be exceeded when installed so that the service life of the converter is not shortened. The temperature quoted in the triangle (e.g. 110) denotes that the surface of the converter must never (even in the event of a defect) exceed this temperature.

Protection symbols



Safety transformer

SELV

Safety Extra Low Voltage



Protection class II



Independent operating device



Furniture installation
Normal operation < 95 °C
Abnormal operation < 115 °C

If the maximum value of 130 °C is not exceeded, the luminaire does not have to be tested in accordance with F conditions.



$t_c = 75$ °C
Measuring point for maximum permissible casing temperature

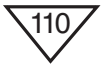

Temperature-protected converter (in this case < 110 °C)

Dimmability of VS transformers and VS converters

Electromagnetic VS transformers can be controlled using phase-cutting leading-edge dimmers. These dimmers "cut" the sinusoidal mains voltage in the negative and positive half wave at an angle in the ascending portion of this sinusoidal half wave. The higher the angle is set at the dimmer controls, the lower the effective value of the voltage and hence the lamp's output.

Electronic VS converters can be controlled using phase-cutting trailing-edge dimmers. In this case, a semiconductor ensures the predefined descending portion of the sinusoidal half wave is clipped, i.e. the voltage is reduced in reverse mode. Again, higher the angle is set at the dimmer controls, the lower the effective value of the voltage and hence the lamp's output.

Converters of the LiteLine (EST 70/12.380, EST 105/12.381, EST 150/12.622 and EST 60/12.635) and TopLine (EST 70/12.643, EST 105/12.644, EST 150/12.645 and EST 200/12.649) families can be operated using conventional phase-cutting trailing-edge and phase-cutting leading-edge dimmers.

Furthermore, TwinLine converters feature a separate potentiometer connection for direct regulation of lamp voltage and thus of its brightness.

VS DALI converters (Digital Addressable Lighting Interface) can be controlled via the DALI interface; dimmer operation (whether phase-cutting leading- or trailing-edge) is not possible.

Dimmable using phase-cutting leading-edge or trailing-edge dimmers



Dimmable using phase-cutting leading-edge dimmers



Dimmable using phase-cutting trailing-edge dimmers



Electronic Converters

The safe operation of electronic converters is dependent on the maximum permissible temperature not being exceeded at the measuring point. Vossloh-Schwabe has determined a casing temperature measuring point – $t_{c\ max.}$ – on all converter casings. To avoid shortening the service life or diminishing operating safety, the stipulated maximum temperature must not be exceeded at this t_c point. This point is determined by testing the converter during normal, IEC-standardised operation at the specified max. ambient temperature (t_a), which is also indicated on the type plate. As both the design-related ambient temperature and the converter's inherent heat generation, as determined by the installed load, are subject to great variation, the casing temperature should be tested at the converter's t_c point under real installation conditions.

Temperature-protected converters feature a further protection symbol, namely a triangle containing the maximum temperature. This symbol certifies that the stipulated surface temperature of the device casing will not be exceed during any operating state or in the event of a defect.

Vossloh-Schwabe electronic converters are tested in accordance with EN 61347. Function tests are carried out in accordance with EN 61047. VS converters can be operated without causing any inadmissible system reactions as all devices comply with EN 61000-3-2 on the limitation of mains harmonics. They also meet the EMC requirements of EN 61547. These devices are thus also protected against mains surges (as defined in the standard) that can be caused by, for instance, inductive ballasts during combined operation of fluorescent and low-voltage halogen lamps.

In addition, all devices comply with the RFI requirements of EN 55015. As the highly effective integrated filter can only limit the unit's own interference, the secondary conductor should be kept to under 2 metres in length so as to avoid RFI interference in the lighting system.

Working principle of a phase-cutting leading-edge dimmer

α = Ignition angle
λ = Operating angle
U = Voltage
I = Current

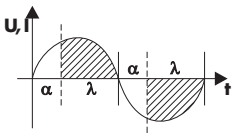

Working principle of a phase-cutting trailing-edge dimmer

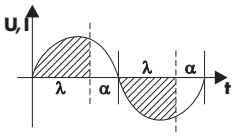

Assembly Instruction for Electronic Converters

For mounting and installing electronic converters for low-voltage halogen lamps

Mandatory regulations

DIN VDE 0100	Erection of low voltage installations
EN 60598-1	Luminaires – part 1: general requirements and tests
EN 61000-3-2	Electromagnetic compatibility (EMC) – part 3: maximum values – main section part 2: maximum values for mains harmonics (device input current up to and including 16 A per conductor)
EN 55015	Maximum values and methods of measurement for RFI suppression in electrical lighting installations and similar electrical appliances
EN 61547	Installations for general lighting purposes – EMC immunity requirements
EN 61347-1	Operating devices for lamps – part 1: general and safety requirements
EN 61347-2-2	Operating devices for lamps – part 2-2: special requirements for DC- or AC-powered electronic converters for incandescent lamps
EN 61047	DC- or AC-powered electronic converters for incandescent lamps – performance requirements

Designations for VS converters

Designations for electronic converters are first listed by the name of the product family, which in each case reflects the visible product properties. The type designation should be read as follows:

EST	60	/12	.388
Electronic safety transformer	Max. wattage	Lamp voltage	Serial number

Mechanical mounting

Mounting position	Any
Clearance	Min. of 0.1 m from walls, ceilings, insulation; min. of 0.1 m from other electronic converters; min. of 0.25 m from sources of heat (lamp)
Surface	Solid; device must not be allowed to sink into insulation materials
Mounting location	In dry rooms or in luminaires, cases, casings or similar in the instance of built-in converters
Fastening	Independent converters: using screws, Ø 4 mm Built-in converters: fix M8 nut on the threaded stud
Heat transfer	If the electronic converter is destined for installation in a luminaire, sufficient heat transfer must be ensured between the converter and the luminaire casing. During operation, the t_c point must not exceed the specified value.

Technical specifications

Type		Operating voltage range AC	Dimmability				Temperature protection		Through-wiring[4]	Type of automatic cut-out and number of possible VS devices			
		Unsuitable for DC operation	Phasecutting trailing edge[1]	Phasecutting leading edge[1]	Max. potentio-meter 3.3 MΩ	DALI	Thermal cut-out[2]	Electronic control[3]	Converter quantity	B (10A)	B (16A)	C (10A)	C (16A)
FlatLine	EST 60/12.388	230	x					x	–	35	56	35	56
	EST 120/12.389	230	x					x	–	18	29	18	29
LiteLine	EST 35/12.650	230–240	x					x	–	55	85	55	85
	EST 70/12.380	230–240	x	x				x	–	28	45	28	45
	EST 105/12.381	230–240	x	x				x	–	20	32	20	32
	EST 150/12.622	230–240	x	x				x	–	14	23	14	23
...Mini	EST 60/12.635	220–240	x	x				x	–	35	56	35	56
TopLine	EST 70/12.643	230–240	x	x				x	7	29	47	29	47
	EST 105/12.644	230–240	x	x				x	7	20	32	20	32
	EST 150/12.645	230–240	x	x				x	5	14	22	14	22
	EST 200/12.649	230–240	x	x				x	5	11	18	11	18
DiscLine	EST 70/12.601	230	x				x		–	30	49	30	49
	EST 105/12.602	230	x				x		–	21	34	21	34
TwinLine	EST 70/12.618	230–240	x		x		x		–	29	47	29	47
	EST 105/12.619	230–240	x		x		x		–	20	32	20	32
CapLine	EST 75/12G.302	230	x				x		–	28	45	28	45
BoardLine	EST 60/12.304	230	x				x		–	34	55	34	55
	EST 70/12.380	230–240	x	x				x	–	28	45	28	45
	EST 105/12.381	230–240	x	x				x	–	20	32	20	32
DALI	ESTd 70/12.660	230–240				x		x	–	28	45	28	45
	ESTd 105/12.662	230–240				x		x	–	14	22	14	22
	ESTd 150/12.661	230–240				x		x	–	11	18	11	18

1 The dimmer is connected to the primary side between mains and converter.
It is possible to connect several converters to one dimmer (whereby the dimmer's minimum and maximum load must be observed).
The dimmer-converter system should be subjected to function and noise development tests prior to installation.
2 In the event of overheating, the protective temperature switch turns the converter off. Once the converter has cooled down, it is automatically switched on again.
3 The rating is decreased electronically in the event of overheating.
4 Distributed secondary leads are only permitted on non-metallic surfaces (RFI suppression)

Properties of electronic converters

Overheating — Protection against overheating is provided by a temperature switch or an electronic controller (see table above).

Short-circuit — The converter will be electronically disconnected in the event of a short-circuit at the output; once the short-circuit has been eliminated, the converter will switch on again automatically.

Overload — Minor overloads (< 50%) will trigger the temperature switch against overheating; major overloads (> 50%) will trigger the same reaction as for short-circuit. The ESTd 70/12.660, ESTd 105/12.662 and ESTd 150/12.661 converter models are fitted with integrated cut-out mechanisms in accordance with the DALI standard EN 62386-204.

Should any of the above-mentioned safety functions be triggered, disconnect the converter from the power supply, then find and eliminate the cause of the problem.

Protection against transient mains peaks
Values compliant with EN 61547 (immunity)

Electrical installation

Conductors
Primary conductor cross-section: min. 0.75 mm²
Secondary conductor cross-section: min. 0,75 mm² for 50 W output and min. 1 mm² for 100 W output

Stripping				
Converter	60/12.388, 120/12.389	60/12.635, 70/12.618, 105/12.619	70/12.643, 105/12.644, 150/12.645, 200/12.649	35/12.650, 70/12.380, 105/12.381, 150/12.622, 70/12.660, 105/12.662 150/12.661
Type of lead	H03-VVH2-F 2X0.75 H05-VVH2-F 2X0.75 H03-VV-F 2X0.75 H05-VV-F 2X0.75	All usual types of lead up to 4 mm²	NYM 2X1.5; NYM 3X1.5 after breaking open the marked plastic parts in the cover over the terminal area of the transformer	H03-VVH2-F 2X0.75 H05-VVH2-F 2X0.75 H03-VV-F 2X0.75 H05-VV-F 2X0.75
Lead preparation	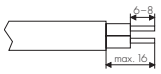	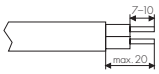		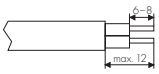

The cables/cords of converter models EST 70/12.601, EST 70/12.618, EST 105/12.602 and EST 105/12.619 must be protected against tension and compression during mounting.

Connections
Screw terminals: max. initial torque of 0.4 Nm must not be exceeded

Secondary length
Min. 0.25 m (clearance to lamp), max. 2 m (RFI protection)

Secondary wiring
Min. 0.1 m clearance from the mains (RFI protection)

Star wiring
Twist single-wire or lead wires narrowly; silicone-insulated leads are recommended

Parallel connection
Secondary-side parallel connection is inadmissible

Feed-through of the mains voltage
See table on page 461
Distributed secondary leads are only permitted on non-metallic surfaces (RFI suppression)

Connection circuit

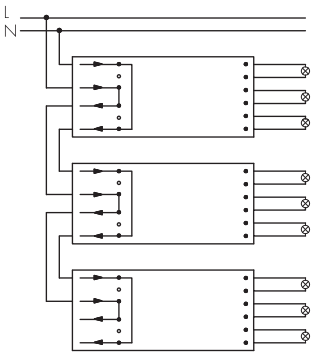

Lead length

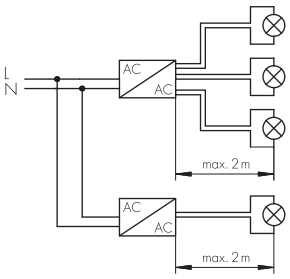

Wiring

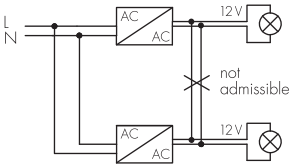

Selection of automatic cut-outs for VS converters

Dimensioning automatic cut-outs
High transient mains current pulses occur when a converter is switched on because the capacitor has to load. As the lamps ignite almost simultaneously, this also creates a high power drain. The high currents that occur when the system is switched on put a strain on the automatic conductor cut-outs, which must be selected and dimensioned to suit.

Release reaction
Release reaction of automatic cut-outs in accordance with VDE 0641, Part 11; for B and C characteristics. The values provided in the table on page 461 are meant as guidelines only and may vary depending on the respective lighting system.

No. of converters
The maximum number of VS converters (see table on page 461) applies to cases where the devices are switched on simultaneously. Specifications apply to single-pole fuses. The number of permissible ballasts must be reduced by 20% for multi-pole fuses. The considered circuit impedance equals 400 mΩ (approx. 20 m [2.5 m²] of conductor from the power supply to the distributor and a further 15 m to the luminaire).

Dimmability of electronic converters

Dimmed operation

VS converters can be operated with phase-cutting trailing-edge dimmers. Some converters can additionally be operated with phase-cutting leading-edge dimmers (see table on page 461). The dimmer is connected to the primary side between mains and converter. It is possible to connect several converters to one dimmer (whereby the dimmer's minimum and maximum load must be observed). The dimmer-converter system should be subjected to function and noise development tests prior to installation.

Converter TwinLine models EST 70/12.618 and EST 105/12.619 can be dimmed using a potentiometer of 3.3 MΩ max.
Converter DALI models ESTd 70/12.660, ESTd 105/12.662 and ESTd 150/12.661 can be dimmed using the DALI interface; operation with leading- or trailing-edge dimmers is not possible.

Electromagnetic compatibility (EMC)

Mains Harmonics

Maximum values are observed in accordance with EN 61000-3-2.

Interference

The requirements of EN 55015 must be met for luminaires with converters for operating low-voltage halogen lamps.
Vossloh-Schwabe converters are designed and manufactured to ensure these requirements are satisfied provided the installation instructions regarding the interference voltage at the connection terminals and electromagnetic interference fields up to 300 MHz are observed.

Additional information

Wiring

To ensure good radio interference suppression and the greatest possible operating safety, the following points should be observed when installing electronic converters:

- Conductors between the EST and the lamp (HF conductors) must be kept short (reduction of electromagnetic interference).
- Mains and lamp conductors must be kept separate and if possible should not be laid in parallel to one another. The distance between HF conductors and mains conductors should be as large as possible, ideally > 5 cm. (This prevents the induction of interference between the mains and lamp conductors).
- The mains conductor within the luminaire must be kept short (to reduce the induction of interference).
- The mains conductor must not be laid too close to the EST (this is especially important in the event of through-wiring).
- Mains and lamp conductors must not be crossed. Should this be impossible to avoid, conductors should be crossed at right angles to one another (to avoid inducing interference between mains and HF conductors).
- Should conductors be wired through metal parts, such conductors must always be additionally shielded (e.g. with an insulating sleeve or grommet).

Temperature

Reference point temperature t_c
The safe operation of electronic converters is dependent on the maximum permissible temperature not being exceeded at the measuring point. Vossloh-Schwabe has determined a casing temperature measuring point – $t_{c\ max.}$ – on all converter casings. To avoid shortening the service life or diminishing operating safety, the stipulated maximum temperature must not be exceeded at this t_c point. This point is determined by testing the converter during normal, IEC-standardised operation at the specified ambient temperature (t_a), which is also indicated on the type plate. As both the design-related ambient temperature and the converter's inherent heat, as determined by the installed load, are subject to great variation, the casing temperature should be tested at the t_c point under real installation conditions.

Ambient temperature t_a
The ambient temperature – as specified on every converter – denotes the permissible temperature range within the luminaire or at the place of installation.

Reliability
Service life of 50,000 hrs at reference point temperature t_c, whereby a switching cycle of 165 minutes on and 15 minutes off is assumed. Failure rate: ≤ 0.2%/1,000 hrs
In order to achieve the average service life, the maximum temperature ($t_{c\ max.}$) must not be exceeded at the t_c point.

Emergency lighting
VS electronic converters cannot be used for emergency lighting purposes as they are unsuitable for DC voltage operation.

System Description of VS DALI Electronic Converters

Vossloh-Schwabe's EST range is rounded off by dimmable converters with a digital interface for low-voltage halogen lamps. The standardised DALI protocol EN 62386-204 (Digital Addressable Lighting Interface) is used for this purpose.

VS DALI converters include the following features:
- potential-free, polarity-independent control input
- dimming curve analogue to the light sensitivity of the human eye
- addressing options: total system, group-wise or individually
- scene memory
- feedback in the event of defective lamps

VS DALI converters offer the convenience of a bus system that is both easy to install and operate.

These features ensure a number of advantages for lighting systems:
- no group wiring needed
- each DALI converter can be individually addressed
- no need for scene memory modules
- synchronised scene transitions
- operating devices provide reports on lamp status
- simple integration into facility management systems

General Information on DALI

Mains voltage and interface conductors must not be wired in parallel to the lamp conductors so as to avoid capacitive bridging of the mains filter.

After initial operation of a DALI system (address assignment, luminaire allocation, group formation, scene settings) it is recommended to disconnect the primary voltage of the DALI operating devices at the circuit breaker for at least 3 seconds and then to reconnect it. The devices will detect this disconnection from the mains and store the settings.

Switching the mains voltage to the DALI conductors within a DALI system will lead to the destruction of both the DALI power supply and the DALI master!

Electromagnetic Transformers

Owing to the low internal impedance of electromagnetic transformers, high currents can occur in the event of a short-circuit on the secondary side, which can lead to the transformer being destroyed. For this reason, IEC 61558-1 differentiates between three types of transformer:

Transformers without short-circuit resistance
These transformers require external protection to prevent excessive temperatures being generated.

At Vossloh-Schwabe, these transformers are marked with the symbol "not short-circuit proof safety transformer". To protect against current overload during overload or short-circuit operation, Vossloh-Schwabe recommends installing a fuse on the primary side. As an aid to the user, the rating of this fuse is stated on the type plate in accordance with IEC 60127. The installed primary-side fuse should be easily accessible so that it can be readily replaced at any time.

Transformers with (limited) short-circuit resistance
These transformers feature a safety device that prevents excessive temperatures being generated.

Electromagnetic transformers with thermal cut-outs afford a limited degree of short-circuit resistance and do not need to be additionally fused. VS safety transformers of limited short-circuit resistance are designed to safely cut out in the event of overload or short-circuit, but not to restart automatically after cooling off. The transformer must first be disconnected from the mains (i.e. switched off and on) before it can be restarted. The thermal cut-outs are dimensioned to ensure that the maximum permissible winding temperature of 225°C (transformers of thermal class B) or 240°C (F) or 260°C (H) is not exceeded in the event of overload or short-circuit.

Transformers with (unlimited) short-circuit resistance
These transformers are designed to ensure that fixed maximum temperatures are not exceeded in the event of overload or short-circuit.

This type of safety transformer is not in common use within the lighting industry due to the relatively large dimensions it needs to meet the overload and short-circuit requirements.

All transformers will function perfectly and meet the requirements of the standard after the overload or short-circuit has been eliminated.

In addition to the above, there are also so-called **failsafe transformers** that are rendered permanently inoperative in the event of improper use, but do not pose a threat to the user or the surroundings. Vossloh-Schwabe does not provide this type of isolation transformer.

All Vossloh-Schwabe transformers are tested for compliance with the safety requirements of European standard EN 61558 regarding creepage and air clearance distances, the winding temperature and the maximum permissible ambient temperature (t_a).

EN 61558 specifies five insulation classes for electromagnetic transformers; respective testing temperatures and times are assigned to these classes. Due to the quality of the insulation materials used by Vossloh-Schwabe, VS transformers are only available in the three highest insulation classes B (120°C), F (140°C) and H (165°C). In this case, the quoted temperature refers to the maximum permissible winding temperature during permanent operation.

As luminaire casings made of plastic or sheet metal will discharge heat to varying degrees and because transformer installation conditions can differ, a transformer's winding temperature must be tested within the luminaire. The measured values will show whether the maximum temperature corresponds to the transformer's insulation class.

On request, Vossloh-Schwabe can carry out such luminaire tests to assess built-in components.

Protection symbols



Non short-circuit proof safety transformer



Limited short-circuit proof safety transformer

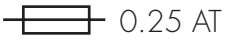

Rated fuse value

t_a 65

Transformer's maximum permissible ambient temperature



Thermal cut-out (reset after disconnection from the mains)

Assembly Instruction for Electromagnetic Transformers

For mounting and installing electromagnetic transformers for low-voltage halogen lamps

Mandatory regulations

DIN VDE 0100	Erection of low voltage installations
EN 60598-1	Luminaires – part 1: general requirements and tests
EN 61558-1	Safety of transformers, power supply units and similar – part 1: general requirements and tests
EN 61558-2-6	Safety of transformers, power supply units and similar – part 2-6: special requirements for safety transformers for general use
EN 61000-3-2	Electromagnetic compatibility (EMC) – part 3: maximum values – main section part 2: maximum values for mains harmonics (device input current up to and including 16 A per conductor)
EN 55015	Maximum values and testing methods for radio disturbance of electrical lighting facilities and similar electrical equipment
EN 61547	Installations for general lighting purposes – EMC immunity requirements

Technical specifications

Mains voltage range	VS safety transformers can be operated at the specified mains voltage within a tolerance range of ±10%
Leak current	≤ 0.1 mA per safety transformer
Power factor	$\lambda \geq 0.85$
Compensation	Not required

Mechanical mounting

Mounting position
Any

Mounting location
Safety transformers are designed for installation in luminaires or comparable devices. Independent safety transformers do not need to be built into a casing.

Fastening
Preferably using screws, Ø 4 mm

Insulation classes and maximum temperatures
In accordance with EN 61558, safety transformers are assigned to insulation classes on the basis of the insulation materials used (also called insulation material classes for this reason) in the transformers. These insulation classes also prescribe respective maximum winding temperatures that must not be exceeded during normal operation or in the event of overload or short-circuit.

Compliance with the maximum winding temperatures is tested by measuring the resistance of the transformer's copper winding.

Insulation classes for safety transformers in accordance with EN 61558-1

	A	E	B	F	H
Max. winding temperature (1.06 U_N) during normal operation	100 °C	115 °C	120 °C	140 °C	165 °C
Max. winding temperature in the event of overload or short-circuit	200 °C	215 °C	225 °C	240 °C	260 °C

Electromagnetic compatibility (EMC)

Interference
Interference voltage measurements do not have to be taken for luminaires with magnetic safety transformers for operating low-voltage halogen lamps as these are systems with lamp voltages of under 100 Hz and it is assumed that such systems do not cause interference.

Interference immunity
Thanks to the robust design and choice of materials, magnetic safety transformers provide a high degree of interference immunity and are not impaired by admissible mains power interference.

Mains harmonics
Owing to the Ohmic resistance characteristics of low-voltage halogen lamps and the low degree of distortion caused by magnetic transformers, mains harmonics remain low.

Safety functions of VS transformers

Load	Transformer features	
	Unprotected (OS)	With self-locking temperature protection (TS)
Overheating	Is not recorded	Protection is provided by the built-in thermal switch
Short-circuit	Protection must be provided by devices fitted in the luminaire (fuse or thermal switch)	
Overload		

Should one of the safety functions be triggered, the transformer must be disconnected from the mains, the cause of the fault found and then eliminated.

Dimmer operation

VS safety transformers can be controlled using progressively adjustable phase-cutting leading-edge dimmers for low-voltage halogen lamps.

Reliability and service life

VS safety transformers are designed for a long service life. Provided the specified maximum values for the winding temperature are complied with during operation, a service life of 10 years can be expected. Failure rate: < 0.025%/1,000 hrs

Electrical installation

Conductors: Primary conductor cross-section: min. 0.75 m², secondary conductor cross-section: min. 0.75 m² for 50 W output and a min. of 1 mm² for 100 W output

Connections: Terminal screws: max. torque of 0.5 Nm must not be exceeded

Parallel connection: Parallel connection is admissible on the primary side, but is inadmissible on the secondary side

Conductors for low-voltage halogen installations

As the high temperatures associated with the operation of low-voltage halogen lamps place severe demands on lampholder conductors, a skilful combination of conductor and insulation is essential. Tin-plated copper conductors with silicone insulation are recommended for temperatures of up to 180°C at the cable's conductor; nickel-plated copper cables with polytetrafluoroethylene (PTFE) sheathing are recommended for temperatures of up to 250°C. Welded connections ensure the most effective heat discharge. Control measurements should be carried out if other connection types are used, e.g. crimping or plug connectors. To prevent the risk of additional heat generation, the maximum permissible current load must be observed when dimensioning the conductor cross-section. When using electromagnetic transformers, the conductor resistance causes a relatively large voltage drop. This drop in voltage is always associated with a reduction of luminous flux. For instance, an 11% drop in voltage will lead to a 30% drop in luminous flux. For this reason, care should be taken to ensure secondary conductors are kept as short as possible and conductor cross-sections are adequately dimensioned when wiring luminaires. Nevertheless, transformers should not be mounted too near the light source (> 25 cm clearance if possible) to prevent the heat generated by the lamp from raising the ambient temperature above the critical level for a transformer.

As electronic converters operate at high frequencies, consideration must be taken of the skin effect, i.e. the displacement of the electrons from the middle of the conductor to its surface. As a result, the full cross-section of the conductor is no longer used, resistance increases and thus leads to a greater drop in voltage. In addition, AC resistance, which is caused by feed line inductance, can result in an even greater voltage drop. It is therefore recommended that lamp conductors be laid closely parallel or twisted together.

Voltage losses (V) with a two-metre secondary conductor

Working frequency	Load	Cross-section/Voltage drop		
	W	0.75 mm²	1 mm²	1.5 mm²
50 Hz (electromagnetic transformers)	50	0,38 V	0.29 V	0.2 V
any wiring layout	100	0.74 V	0.56 V	0.39 V
40 kHz (electronic converters)	50	1.4 V	1.25 V	1.2 V
any wiring layout (loops)	100	3.3 V	3.1 V	3 V
40 kHz (electronic converters)	50	0.5 V	0.45 V	0.35 V
wires twisted together or closely parallel	100	1.2 V	1 V	0.85 V

Wiring

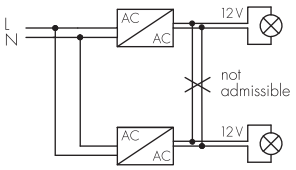

Conductor Contacts

Pin contact Ø 1

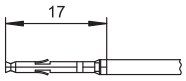

Socket connector

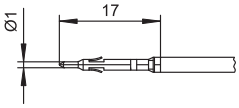

Flat connector 6.3x0.8

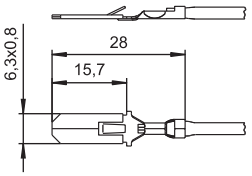

Cable with ferrules

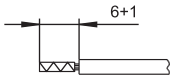

Cable, notched at 6 mm

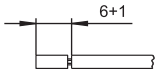

Cable, bared at 6 mm

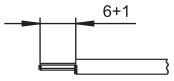

Ultrasonically welded cable end

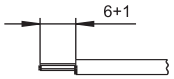

Conductors for installations with halogen lamps

All conductors must be selected to suit the luminaire conditions (see table) in terms of material, cross-section and insulation. Testing these conductors under worst case conditions is essential as the commonly occurring high temperatures considerably reduce the conductivity of the conductor and hence its current-carrying capacity.

Insulation	Conductor Material	Cross-section mm²	Mains voltage V	Max. temperature °C
SI	Cu tin-plated (Cu vz)	0.75	300	180
FEP	Cu tin-plated (Cu vz)	0.75	300	180
PTFE	Cu nickel-plated (Cu vn)	0.75	500	250
PTFE	Cu nickel-plated (Cu vn)	1	500	250
PTFE	Ni	1	500	250
PTFE	Ni	1.5	500	250

Lampholders

For low-voltage halogen lamps

With the exception of B15d bases, the low-voltage sector is dominated by pin bases, which are fitted with a variety of different pin distances and diameters. Apart from classic lampholders that ensure both the electrical contact and the correct positioning of the lamp, connection elements are also available. These components are solely responsible for establishing electrical contact and are used in cases where, for instance, the regulations demand that the lamp be attached to its reflector (e.g. cold-light reflector lamps with GZ4 and GX5.3 bases). Extremely high temperatures are also generated when operating low-voltage halogen lamps as a result of the tungsten-halogen cycle and high lamp currents. In addition, the respective luminaires are often of very compact design, which leads to heat accumulation and thus to high internal temperatures. The materials the lampholder is made of thus play a vital role for the luminaire's operating safety and the lamp's service life. In addition to tried-and-tested materials – ceramics for casings and mica for covers – ever more frequent use is being made of highly heat-resistant plastics like LCP (liquid crystal polymer for e.g. G4, GU4, GX5.3, GU5.3 and GY6.35 lampholders) and PPS (polyphenylene sulphide for G4 lampholders). Plastic lampholders provide clear advantages: narrow dimensional tolerances, no material fractures, low weight and clip-attachment options.

VS lampholders for the UL market and UL approved leads are available for all common lamp types.

Further information can be found at www.unvlt.com.

The type of contact also plays an important role. Conventional contacts are only attached to one side of the lamp pin. In contrast, additional contact points – known as multipoint contacts – lead to a reduction of current density at the point of transition from the lamp pins to the lampholder contact and with that to a decrease in temperature. These contacts provide the further advantage of ensuring superior heat dissipation from the lamp pins to the conductor. The temperature advantage of multipoint contacts in defined conditions (including welded-on conductors) can amount to as much as 100 °C. In extremely rare cases, due to the high internal pressure in the bulb, it is possible for the lamp to shatter. For reasons of fire prevention (high temperature of the glass bulb), the lamp's components must be prevented from falling out. Enclosed luminaires meet these requirements. Open luminaires, however, may only be operated using lamps with enclosed bulbs or low-pressure lamps. Lamps of this kind are suitably marked with pictograms on the lamp's packaging and in the lamp manufacturer's documentation. Lamps marked with pictogram No. 1 are suitable for use with open luminaires, whereas those marked with pictogram No. 2 may only be used in enclosed luminaires.



1 2

Lampholders for low-voltage halogen lamps are equipped with mounted cables or with plug-type connectors. In addition to the various lampholders contained in the catalogue, further lampholder models with various cable lengths and of various qualities as well as lampholders with plug-connected cables can be made available on request.

Bases of the most widely used low-voltage halogen lamps

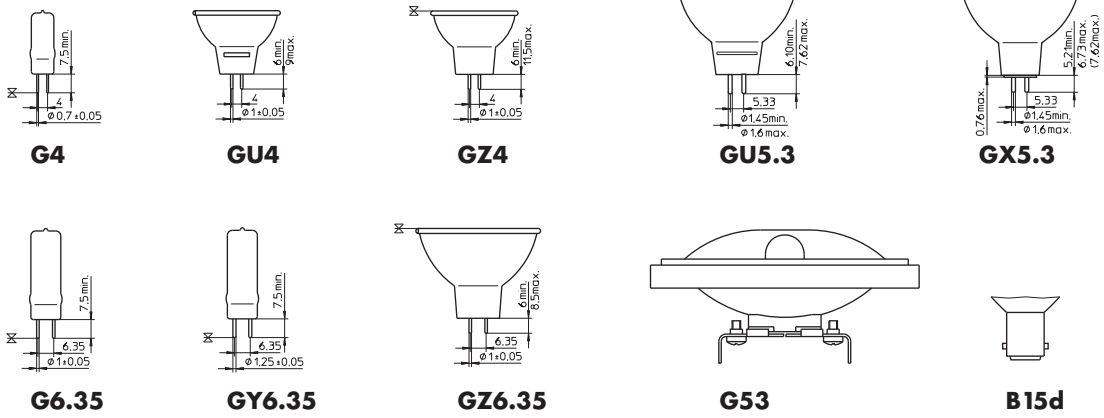

Lampholders for mains voltage halogen lamps

A major factor in lampholder design is the lamp temperature, which is determined by the tungstenhalogen cycle, high lamp current and high wattages. Lampholder casings can be made of ceramics, metal or the ever more popular highly heat-resistant thermoplastics like PET (polyethyleneterephthalate), PPS (polyphenylene sulphide) and LCP (liquid crystal polymer). The most suitable contact materials for these temperatures are nickel, copper-nickel alloys or copper materials with sufficiently thick nickel coatings. For tubular lamps (R7s base), the standard IEC 60061-2 7005-53 prescribes the respective contact pressure of lampholder contact materials.

Although halogen lamps offer twice the service life of general-purpose light bulbs, this can only be fully realised if luminaire manufacturers observe the recommended maximum temperatures at the lamp's pinch point. There is usually a welded-on molybdenum plate at the pinch point where the lamp base pins join the lamp filament. Lamp manufacturers ascertain the pinch temperature at this point, which is generally located within the lamp's quartz glass, using specially prepared measuring lamps. The pinch temperature is a critical thermal reference point which must not be exceeded within the luminaire.

VS lampholders for the UL market and UL approved leads are available for all common lamp types.

Further information can be found at www.unvlt.com.

The bases of the most widely used mains voltage incandescent lamps

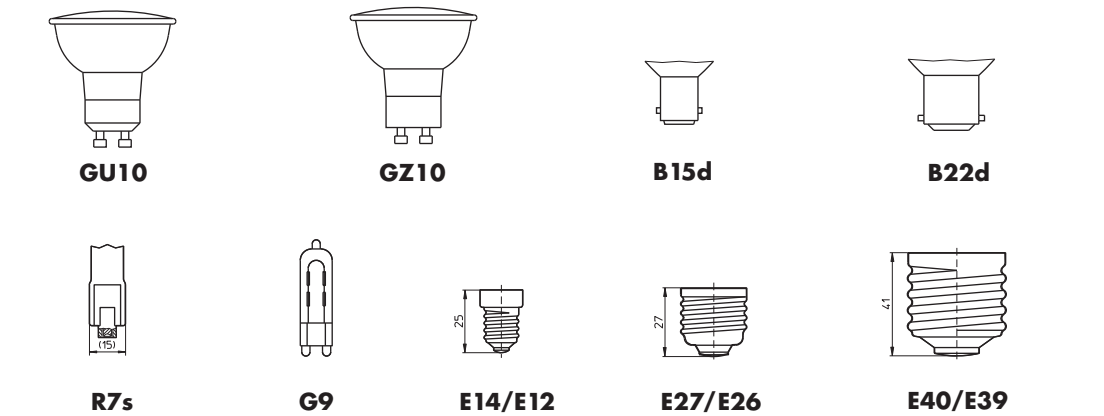

DALI LIGHT CONTROL GEAR AND ACCESSORIES





INTELLIGENT INDOOR LIGHTING

In addition to easily modifiable rooms, modern society particularly needs flexible lighting systems – a requirement that can only be satisfied with the help of intelligent and versatile solutions that suit the given purpose. Furthermore, where possible cost-intensive refurbishment measures should be avoided.

The VS LiCS Indoor System enables individual control of single luminaires, e.g. using sensors or conventional push buttons. If required, the system can be easily reconfigured without requiring rebuilding measures.

Typical applications

- Offices, industrial spaces and warehouses
- Supermarkets
- Public buildings (e.g. schools and hospitals)
- Stairwells and hallways
- Sanitary facilities

LiCS INDOOR

- Adjustment of lighting levels to suit human needs
- Energy savings and cost reductions
- More convenience thanks to automation

6 Lighting Control System for Indoor Applications

LiCS Indoor System overview **474–475**

DALI light control gears **476–477**
Light Controller L/LW 476
Light Controller S 477

Extender **478**

Sensors **479**

Accessories **480**

Technical details for lighting control system for indoor **481–487**
General technical details 533 - 540
Glossary 541 - 543

Overview of the LiCS Indoor System

This new generation of Vossloh-Schwabe lighting control gear was designed for indoor applications and combines the convenience of a light management system with the ability to reap substantial energy savings by ensuring targeted use of light.

These VS lighting control devices are light management systems that require neither a PC nor an overriding bus system to control and regulate a lighting system. The equipment works with the standardised DALI protocol and complies with all currently valid parts of the DALI standard, IEC 62386.

The system can be commissioned without needing any additional equipment, with configuration undertaken using the controller. To this end, the controller is fitted with a corresponding user interface, which enables easy system configuration and adjustment.

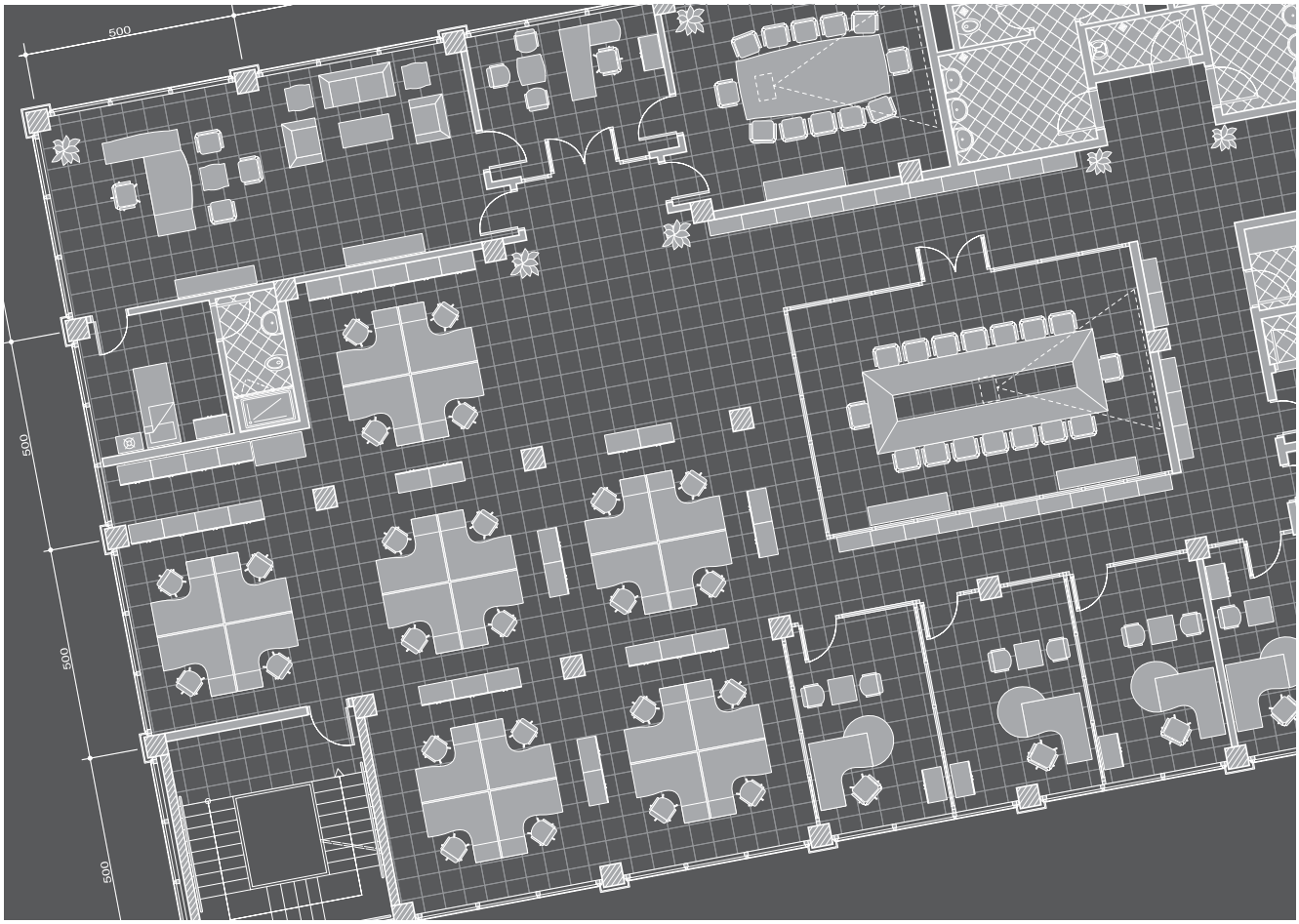

Overview of the LiCS Indoor System

Product matrix	Light Controller L	Light Controller LW	Light Controller S	Light Controller XS
				PRELIMINARY
	for integration into the distribution board	for integration into the distribution board – EnOcean wireless version	for independent operation	
Sensors (motion and brightness)				
Extender				
Accessories	max. 6 buttons (mains voltage-compatible)	antenna (magnetic-base or screw-base); max. 6 buttons (mains voltage-compatible); EnOcean wireless modules (max. 16 pcs.)	button (mains voltage-compatible)	button (mains voltage-compatible)

Functions	Light Controller L	Light Controller LW	Light Controller S	Light Controller XS
Control options	single, group, broadcast	single, group, broadcast	broadcast	broadcast
No. of groups	max. 16	max. 16	–	–
No. of EBs	max. 64	max. 64	max. 64	max. 10
No. of sensors	max. 16	max. 16	max. 16	max. 1
Motion detection (automatic and semi-automatic)	●	●	●	●
Constant light control	●	●	●	●
Scene settings	●	●	–	–
Push function	●	●	●	●
ON/OFF function	●	●	●	●
Stairwell function (timer)	●	●	●	●
System analysis software	●	●	–	–
Password protection	●	●	–	–
Minimising standby losses	●	●	–	–
Menu navigation in	German, English, French, Italian, Spanish	German, English, French, Italian, Spanish	–	–
Configuration using	rotary push key and screen	rotary push key and screen	dip switch	dip switch

Light Controller L/LW



For installation in a distribution board
This light control gear is designed for installation in a distribution board.

Technical notes
Configuration interface: display screen and rotary push key (on the controller)
Ambient temperature t_a: 5 to 50 °C
Push-in terminals with push-button: 0.5–1.5 mm²
Degree of protection: IP20, Protection class: I
RFI-suppressed
The MultiSensors are connected directly to the DALI bus
No. of DALI ballasts: max. 64 pcs.
No. of MultiSensors: max. 16 pcs.

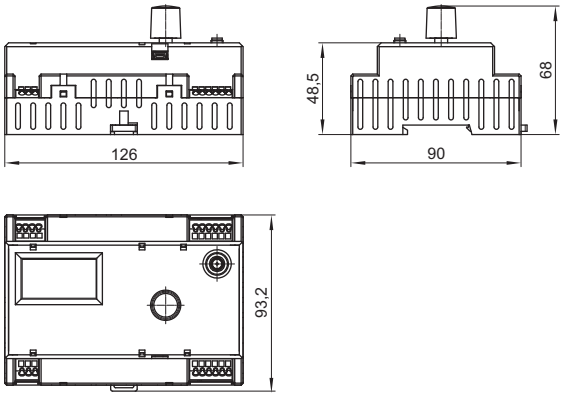

Connections
Mains connection: 220–240 V AC, 50–60 Hz, max. power consumption 9 W
1 DALI bus to 3 pairs of terminals: max. current on DALI bus = 200 mA (see the respective data sheet for current consumption of individual components)
As a standard DALI bus is not SELV-compliant, the DALI cable must be rated for mains voltage.
The DALI bus features reversible electronic overload and short-circuit protection.
6 independently configurable push button inputs: cables must be rated for mains voltage; 220–240 V AC, 50–60 Hz
1 closing relay contact to 2 pairs of terminals (can be reconfigured as an opener):
Minimising standby losses
Antenna jack (only Light Controller LW): radio signal with a frequency of 868 MHz

Functions
Automatic and semi-automatic motion detection, constant light control, scene settings, push function, ON/OFF function, stairwell function (timer), system analysis software, password protection, control options (broadcast, single and group), software languages: German, English, French, Spanish, Italian

LightController L
Dimensions (LxWxH): 126x90x68 mm, 7hp (horizontal pitches)
Weight: 250 g
new **Ref. No.: 186189**

LightController LW
Suitable for wireless operation with EnOcean
No. of wireless modules: 16 pcs.
Antenna needed (see p. 480)
Dimensions (LxWxH): 126x90x68 mm, 7hp (horizontal pitches)
Weight: 250 g
new **Ref. No.: 186190**

enocean alliance
No Wires. No Batteries. No Limits.

Light Controller S

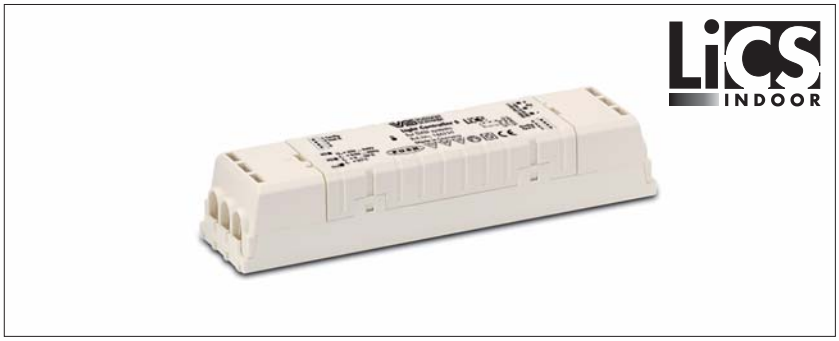

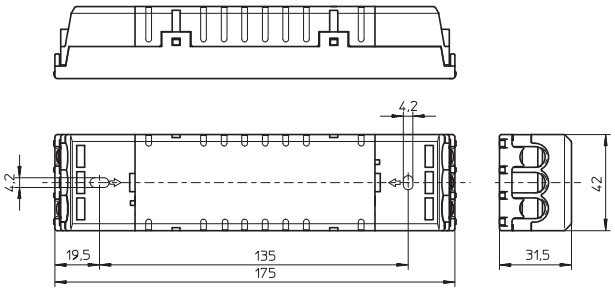

For independent operation
These light control devices are suitable for independent operation (e.g. in false ceilings).

Technical notes
Configuration interface: dip switch (on the device)
Ambient temperature t_a: 0 to 50 °C
Max. casing temperature t_c: 65 °C
Screw terminals: 0.75–2.5 mm²
Degree of protection: IP20, Protection class: II
RFI-suppressed
The MultiSensors are connected directly to the DALI bus
No. of DALI ballasts: max. 64 pcs.
No. of MultiSensors: max. 16 pcs.

Connections
Mains connection: 220–240 V AC/DC, 0/50–60 Hz,
max. power consumption 6.5 W
1 DALI bus: max. current on DALI bus = 200 mA
(see the respective data sheet for current consumption of individual components)
As a standard DALI bus is not SELV-compliant, the DALI cable must be rated for mains voltage.
The DALI bus features reversible electronic overload and short-circuit protection.
1 configurable push button input:
cables must be rated for mains voltage; 220–240 V AC/DC, 0/50–60 Hz

Functions
Automatic and semi-automatic motion detection, constant light control, push function, ON/OFF function, stairwell function (timer), control option (broadcast)

LightController S
Dimensions (LxWxH): 175x42x31.5 mm
Weight: 150 g
new **Ref. No.: 186210**

Extender

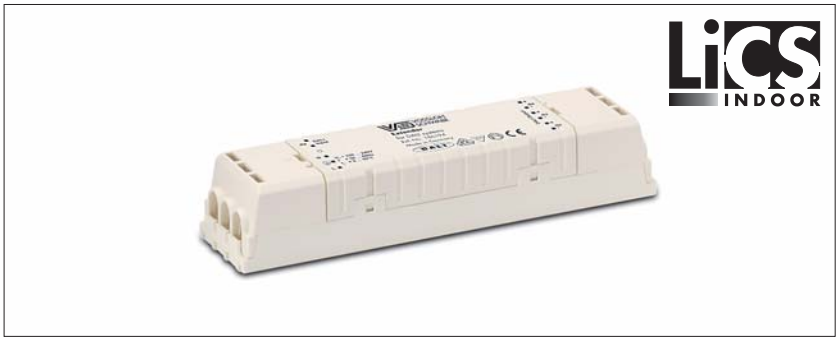

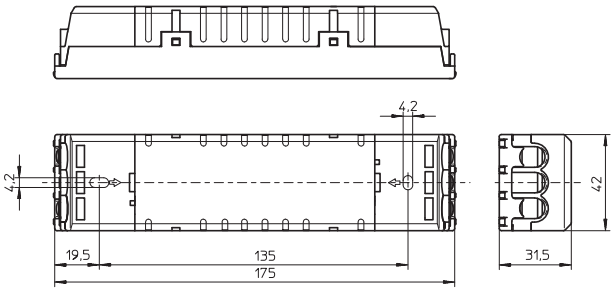

To extend LiCS Indoor System

An extender enables the maximum number of DALI-compliant control gear units within a standard DALI system to be increased.

This means the DALI extender is installed and addressed in instead of the ballast. At the extender output, up to 64 DALI ballasts can then be connected, which will all respond in the same way to the respective input signal.

The extender for DALI systems can only be used in combination with a DALI controller. When DALI commands are received, the extender behaves just like a DALI-compliant ballast for fluorescent lamps.

Technical notes

Configuration interface: via a DALI controller
Ambient temperature t_a: 0 to 50 °C
Max. casing temperature t_c: 65 °C
Screw terminals: 0.75–2.5 mm²
Degree of protection: IP20, Protection class II
RFI-suppressed

Connections

Mains connection: 220–240 V AC/DC, 0/50–60 Hz
Max. power consumption: 6.5 W
For DALI signals in acc. with IEC 62386
DALI current consumption: 2 mA
1 DALI bus to 3 terminal pairs: max. current on the DALI bus = 200 mA (see the respective data sheet for current consumption values of the individual components)
As a standard DALI bus is not SELV-compliant, the DALI cable must be rated for mains voltage.
The DALI bus features reversible electronic overload and short-circuit protection.

Functions

Connection of up to 64 ballasts to a single DALI address

Extender

To extend DALI-controlled lighting systems
Dimensions (LxWxH): 175x42x31.5 mm
Weight: 150 g

new **Ref. No.: 186194**

Sensors

To supplement LiCS Indoor System

Daylight and motion sensors increase both energy savings and convenience.

VS MultiSensors detect both light levels and motion. In addition, MultiSensors feature a space-saving design and were specifically developed to work with VS Light Controllers. No external power supply is required, as the sensors are supplied via the DALI bus.

Technical notes

Configuration interface:
via the Light Controller L/LW and S
Ambient temperature t_a: 0 to 50 °C
Push-in terminals with push-button: 0.5–1.5 mm²
DALI current consumption: 10 mA

Functions

Motion detection and monitoring of lighting levels. With built-in LED (red): the light flashes during configuration when the sensor is selected.

MultiSensor SM
For surface mounting
Dimensions (ØxH): 53x48.5 mm
Weight: 30 g
new **Ref. No.: 186191**

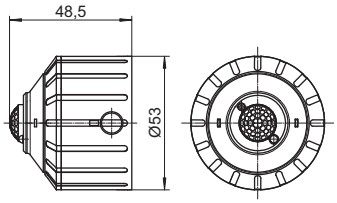



MultiSensor FM
For ceiling installation
With cord grip
Dimensions (ØxH): 40x43.8 mm
Weight: 30 g
new **Ref. No.: 186192**

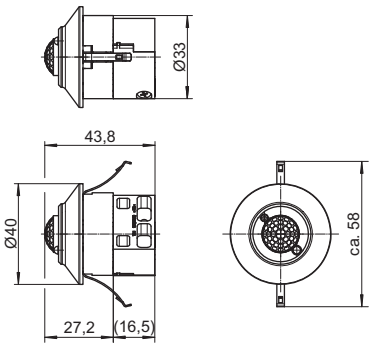



MultiSensor IL
For luminaire installation
Dimensions (ØxH): 45x31.9 mm
Weight: 30 g
new **Ref. No.: 186193**

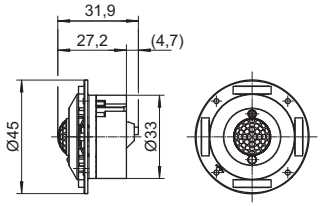



Accessories

To supplement LiCS Indoor System

To ensure faultless wireless operation, an antenna must be connected that is set to the respective frequency.

When fitting the antenna, care must be taken that it is not shielded by metal objects, e.g. steel cabinets, radiators, ventilation shafts etc., to ensure optimum signal reception.

The requisite antenna is provided by Vossloh-Schwabe in two models: the screw-base model comes with a detachable connection cable, while the magnetic-base model is fitted with a non-detachable connection cable.

Magnetic-base antenna with connection cable
Antenna dimensions (ØxH): 29x88 mm
Cable diameter: Ø 6 mm, length: 2.5 m
Min. bending radius of the cable: 50 mm
Impedance: 50 Ω
Capacity: 10 W pulsed
Ambient temperature t_a: –40 to 80 °C
Storage temperature: –40 to 80 °C
Degree of protection: IP66
Weight: 62 g
new **Ref. No.: 186211**

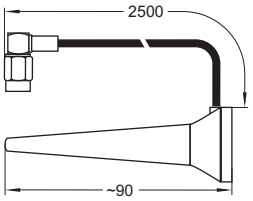



Screw-base antenna
Antenna dimensions (ØxH): 33x89 mm
Impedance: 50 Ω
Capacity: 8 W pulsed
Ambient temperature t_a: –40 to 70 °C
Storage temperature: –40 to 80 °C
Degree of protection: IP66
Weight: 41 g
new **Ref. No.: 186212**

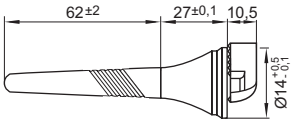



Connection cable for the screw-base antenna
Cable diameter: Ø 6 mm, length: 1.5 m
Min. bending radius of the cable 50 mm
Weight: 66 g
new **Ref. No.: 186213**



6 Lighting Control System for Indoor Applications

Light Controller L/LW **482–484**
Assembly instructions 482
Circuit diagrams 483

Light Controller S **483–484**
Assembly instructions 483
Circuit diagrams 484

Extender **485–486**
Assembly instructions 485
Circuit diagrams 486

Sensors **486–487**
Assembly instructions 486
Circuit diagrams 483-486

General technical details **533–540**

Glossary **541–543**

General safety information

- LiCS products may only be installed and commissioned by authorised and fully qualified staff.
- These instructions must be carefully read before installing and commissioning the system, as this is the only way to ensure safe and correct handling.
- Before any work is carried out on the equipment, it must be disconnected from the mains.
- All valid safety and accident-prevention regulations must be observed.
- The products should never be inexpertly opened as this poses lethal danger due to electrical shock. Repairs may only be undertaken by the manufacturer.
- On no account may the DALI control line be used to carry mains voltage or any other external voltage as this can destroy individual system components.

Light Controller L/LW

Installation

- In a distribution board on a 35-mm mounting rail in acc. with DIN 43880; required installation space: 7 hp (horizontal pitches) (126 mm)
- The controller must be installed so the display screen is in the upper left corner.
- Hook the light controller over the upper edge of the rail using the two mounting notches. Then carefully press the controller onto the lower part of the rail until the mounting spring on the controller snaps into place over the rail. If required, use a screwdriver to help you with the spring.

Removal

To remove the controller from the mounting rail, use a screwdriver to loosen the spring and ease the controller over the rail flange from the bottom.

Installation instructions

- Conductor cross-section for all terminals: 0.5–1.5 mm² for rigid or flexible conductors
- Cable preparation (see right)
- To protect the equipment, a 10 A or 16 A, Type B automatic circuit breaker must be fitted.
- Push button inputs 1–6: cables must be rated for mains voltage; max. cable length = 100 m.
- As a standard DALI bus is not SELV-compliant, the DALI cable must be rated for mains voltage.
- A max. of 64 DALI ballasts and/or DALI extenders in aggregate can be connected as well as up to 16 MultiSensors, which in total must not exceed 200 mA. The exact number of components can be found in the manual.
- The power supply and the DALI line can be laid in a single cable provided the cable does not exceed a maximum length of 100 m, e.g. using 5x1.5 mm².
- Three electrically connected DALI outputs make it easier to connect DALI control gear. Please observe the maximum lengths of the DALI bus during installation:

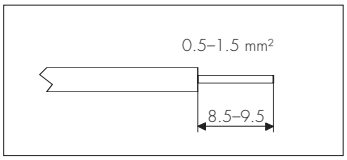

	1.5 mm²	1 mm²	0.75 mm²	0.5 mm²
6.2 Ω max.	300 m	180 m	130 m	80 m

- The relay contact is a potential-free closing contact. The current load of the relay contact must not exceed an Ohmic load of $I_{max.}$ = 3 A. When using the standby contact, an additional external power relay should be used.
- Although both models of the Light Controller (L/LW) feature an antenna-connection jack (located top right on the front), only the jack on the LW model is functional. This is where the antenna is connected to enable wireless operation (EnOcean) of the Light Controller LW.

Additional information

- To ensure faultless wireless operation, an antenna must be connected that is set to the respective frequency. This antenna is not included in the scope of delivery.
- Please refer to the manual at **www.vossloh-schwabe.com/en/home/services** for exact instructions on how to configure the system using the controller.
- The outputs of different controllers must not be connected with each other.
- To ensure safe operation of the controller, the maximum ambient temperature must not be exceeded.

Circuit diagram of Light Controller L/LW

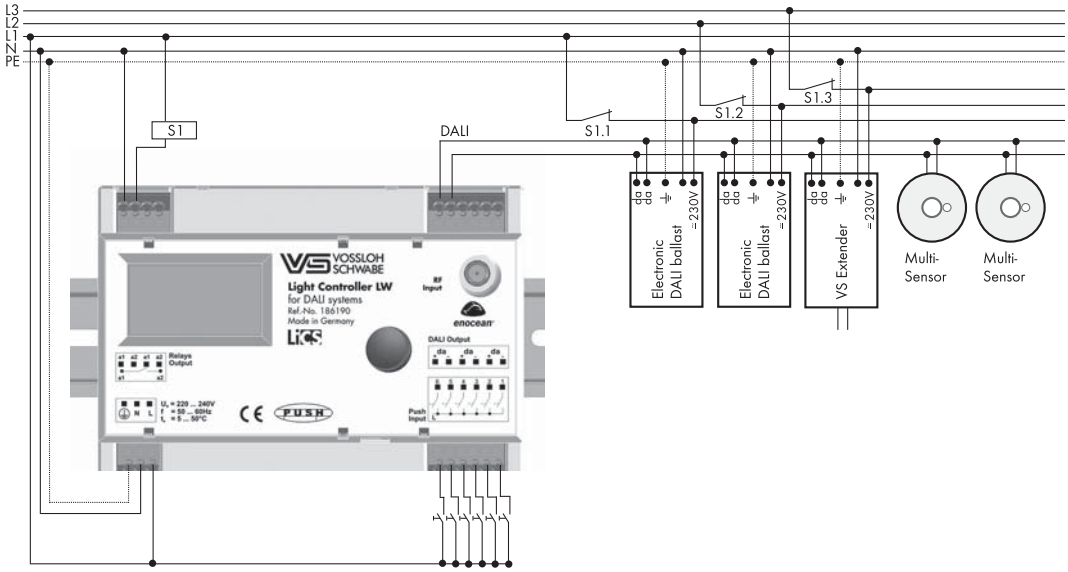

Light Controller S

Installation

- Independent installation, e.g. in false ceilings
- Easy and time-saving installation thanks to end caps that snap into place without needing tools.
- Clearance: min. 0.1 m to walls, ceilings, insulation and other electronic devices; min. 0.25 m to sources of heat (e.g. lamps)
- Surface: solid, must not let the controller sink into insulation material
- Fastening: using 4-mm screws

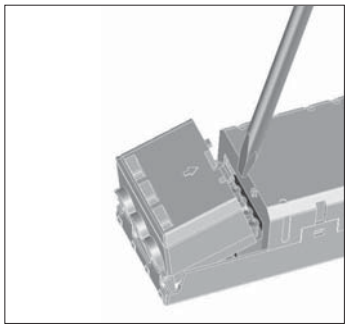

Installation instructions

- Conductor cross-section for all terminals: 0.75–2.5 mm²
- Cable preparation (see right)
- Screw terminals: max. tightening torque = 0.4 Nm
- A standard DALI bus only features basic insulation. All DALI cables must be rated for mains voltage.
- A max. of 64 DALI ballasts and/or DALI extenders in aggregate can be connected as well as up to 16 MultiSensors, which in total must not exceed 200 mA. The exact number of components can be found in the manual.
- The power supply and the DALI line can be laid in a single cable provided the cable does not exceed a maximum length of 100 m, e.g. using NYM 5x1.5 mm². Please observe the maximum lengths of the DALI bus during installation:

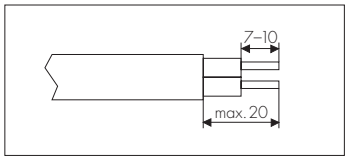

	1.5 mm²	1 mm²	0.75 mm²	0.5 mm²
6.2 Ω max.	300 m	180 m	130 m	80 m

- Push button inputs: cables must be rated for mains power; maximum 100 m.

Additional information

- The outputs of several light controllers (S model) must not be connected with each other.
- All control gear that is connected to the output of the DALI Light Controller S is synchronously operated in "broadcast" mode; the DALI ballasts are not addressed.
- To ensure safe operation of the Light Controller (S model), the maximum casing temperature at the measuring point (t_c) must not be exceeded.
- Please refer to the manual at **www.vossloh-schwabe.com/en/home/services** for exact instructions on how to configure the system using the controller.

Circuit diagram of Light Controller S

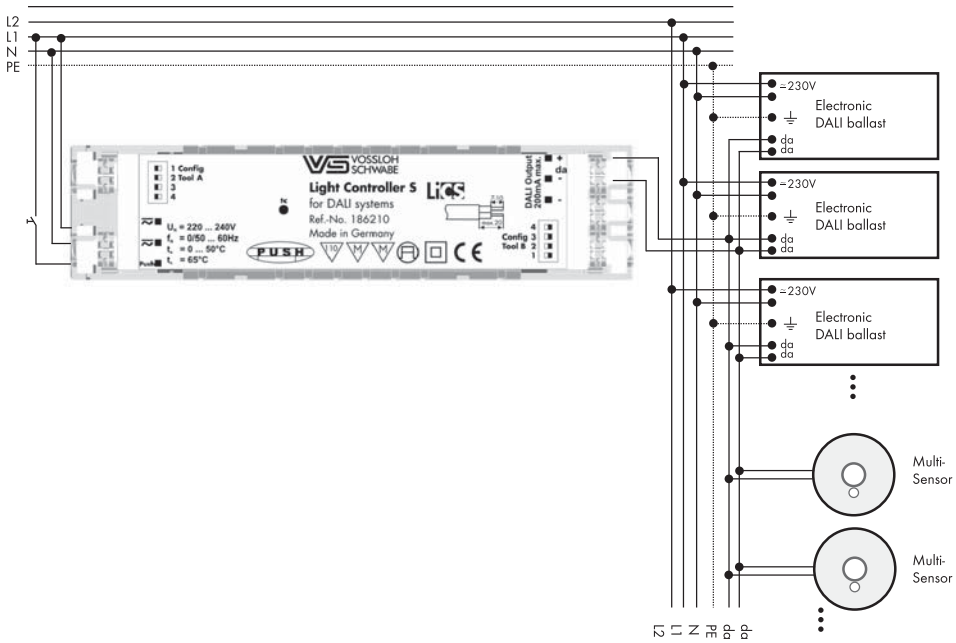

Technical Details Light Controllers

Light Controller	L	LW	S
Ref. No.	186189	186190	186210
Supply voltage	220–240 V AC, 50–60 Hz		220–240 V AC/DC, 0/50–60 Hz
Power consumption	9 W		6.5 W
Ambient temperature t_a	5 to 50 °C		0 to 50 °C
DALI output (da+–)	max. 200 mA current drain		
No. of DALI ballasts	max. 64 pcs. per Controller (expandable with the Extender)		
No. of MultiSensors	max. 16 pcs.		
RF input	–	Antenna for a reception range of 868 MHz	–
Wireless module	–	All radio buttons with PTM radio sensors by EnOcean with 868 MHz	–
No. of wireless modules	–	max. 16 pcs. with up to 4 buttons	–
Relay (outputs a1, a2)	250 V, max. 3 A ohmic load		–
Push inputs 1–6	220–240 V AC, 50–60 Hz		220–240 V AC/DC, 0/50–60 Hz
Degree of protection	IP20		
Protection class	I		II
Weight	250 g		150 g
CE requirements	EMC in acc. with EN 61547, RFI in acc. with EN 55015, Safety in acc. with EN 61347-2-11		

Extender

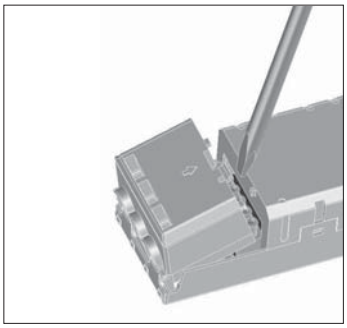

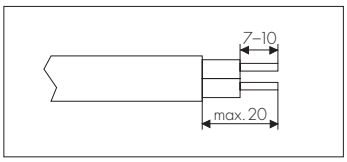

Installation

- Independent installation, e.g. in false ceilings
- Easy and time-saving installation due to end caps that snap into place without needing tools
- Clearance: min. 0.1 m to walls, ceilings, insulation and to other electronic devices; min. 0.25 m to sources of heat (e.g. lamps)
- Surface: solid, must not permit the extender to sink into insulation material
- Fastening: using 4-mm screws

Installation instructions

- Cross-section of primary/secondary conductor: 0.75–2.5 mm²
- Cable preparation (see right)
- Screw terminals: max. tightening torque = 0.4 Nm
- Length of the secondary bus cable: max. 300 m
- A standard DALI bus only features basic insulation. All DALI cables must be rated for mains voltage.
- The power supply and the DALI line can be laid in a single cable (max. 100 m).
- Mains power cables and DALI cables should not be laid directly parallel to lamp cables (min. clearance = 0.25 m).
- A maximum of 64 DALI ballasts and/or DALI extenders in total can be connected as well as up to 16 MultiSensors.

Additional information

- The extender can only be operated if connected to a DALI control unit. Please refer to the respective operating instructions for information on the control unit.
- The DALI extender is integrated into the DALI system using the "random address" assignment method.
- Three electrically connected DALI outputs make it easier to connect DALI ballasts. A maximum of 64 DALI ballasts and/or DALI extenders in total can be connected.
- The outputs of several extenders must not be connected with each other.
- All control gear that is connected to the output of the DALI Extender is synchronously operated in "broadcast" mode; the output side is not addressed.
- To ensure safe operation of the Light Controller S, the maximum casing temperature at the measuring point (t_c) must not be exceeded.

Technical details

Extender	
Ref. No.	186194
Supply voltage	220–240 V AC/DC, 0/50–60 Hz
Power consumption	6.5 W
Control input	DALI in. acc. with IEC 62386-102/-201
DALI output	max. 64 pcs. DALI EBs or max. 200 mA (expandable with the Extender)
Ambient temperature t_a	0 to 50 °C
Casing temperature t_c	max. 65 °C
Degree of protection	IP20
Protection class	II
Weight	150 g
CE requirements	EMC in acc. with EN 61547, RFI in acc. with EN 55015, Safety in acc. with EN 61347-2-11

Circuit diagram of the Extender

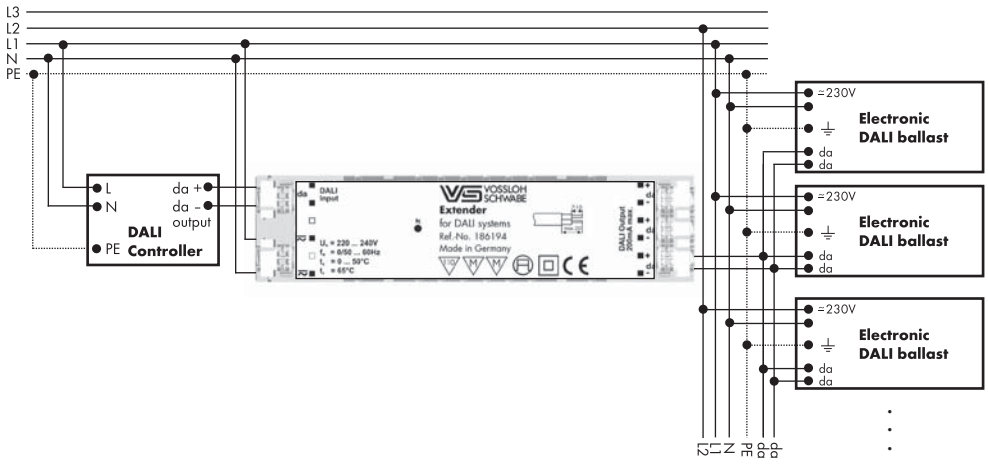

Sensors

Installation

SM (Surface Mounted)

Prepare the cable accordingly and thread it through the back plate of the sensor at the side or from behind. Attach the back plate in the selected position using the two screws provided, then connect the cable to the sensor. Use two fingers to lightly press the springs of the sensor cover together and allow to lock into place along the guide rails inside the sensor's bottom face (see Fig. 1).

FM (Flush Mounted), with or without cord grip

Prepare the cable, connect to the sensor and attach cord grip if appropriate. Use two fingers to lightly press the sensor together and allow to lock into place in the pre-drilled hole (35 mm) in the selected position (see Fig. 2).

IL (In Luminaire)

Heed the dimension of the drilling template when inserting the sensor in the metal plate, which is 0.5–1 mm thick. Allow the sensor to lock into place in the precisely pre-drilled hole in the metal plate. Allow the sensor cover ring to lock into place from the other side in the recesses provided (see Fig. 3).

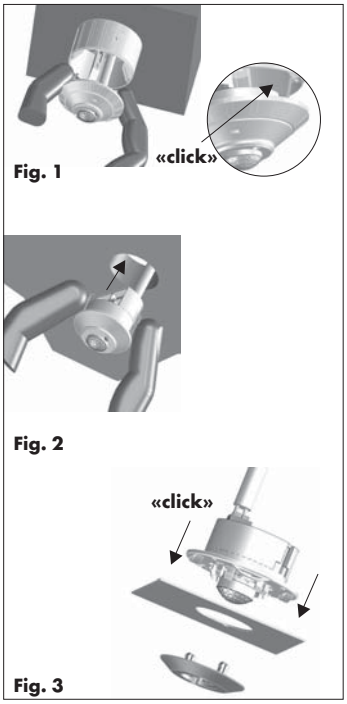

Installation instructions

- Conductor cross-section of all terminals: 0.5–1.5 mm² for both rigid and flexible conductors
- Preparation of the sensor cables (see right)
- As a standard DALI bus is not SELV-compliant, cables must be rated for mains voltage.
- The power supply and the DALI line can be laid in a single cable provided the cable does not exceed a maximum length of 100 m, e.g. using NYM 5x1.5 mm².
  Please observe the maximum lengths of the DALI bus during installation:

	1.5 mm²	1 mm²	0.75 mm²	0.5 mm²
6.2 Ω max.	300 m	180 m	130 m	80 m

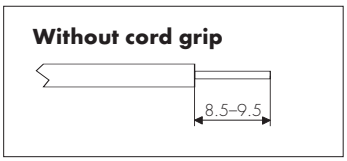

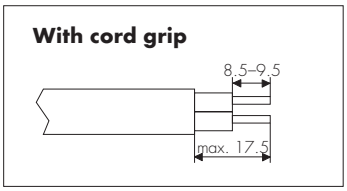

Additional information

- VS MultiSensors can only be operated in combination with a VS Light Controller from the LiCS indoor range.
- Please refer to the controller manual for exact instructions on how to configure the sensor.
- To ensure safe operation of the sensors, the maximum permitted ambient temperature must not be exceeded.
- The sensor must be positioned to ensure its reception range is not obstructed by objects, furniture, etc.
- See Fig. 4 for the sensor range.
  The height specified in Fig. 4 is a reference value. For other and specifically greater heights, it may be necessary to test the sensitivity of the sensors on site as the sensitivity of the motion sensor decreases the higher up it is mounted.

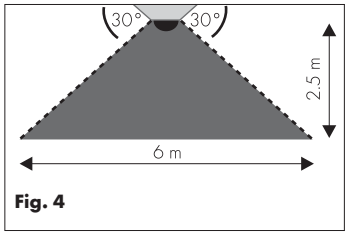

Fig. 4

Technical details

MultiSensor	SM	FM	IL
Ref. No.	186191	186192	186193
Control input	DALI in acc. with IEC 62386		
DALI current consumption	10 mA		
Ambient temperature t_a	0 to 50 °C		
Casing temperature t_c	max. 50°C		
Degree of protection	IP20		
Protection class	II		
Weight	30 g		
CE requirement	Safety in acc. with EN 61347-2-11		

Circuit diagram of the sensors

See the circuit diagrams of the Light Controllers on pages 483 and 484.

ELECTRONIC CONTROL OF OUTDOOR LIGHTING





ECO-FRIENDLY AND COST-SAVING LIGHTING

The lighting solutions provided by Vossloh-Schwabe ensure that local authorities everywhere can save energy, achieve sustainable cost reductions and at the same time make a valuable contribution to reducing CO_2 output. Using various lighting situations as examples, energy savings of 30%–50% can be achieved if efficient technology is used in the right place.

This chapter presents Vossloh-Schwabe's newly developed light control systems for street lighting and lighting systems in the vicinity of buildings.

Luminaires operated in combination with magnetic and dimmable electronic ballasts that feature a 1–10 V or DALI interface can be monitored and controlled using these products. The system is suitable for both new installations as well as classic retrofits.

Without exception, all LiCS outdoor products can rightfully claim to provide the most efficient and most flexible control solutions for outdoor lighting. Vossloh-Schwabe's light management systems enable centralised control of individual luminaires with the advantage of a constant online link and the ability to monitor the lighting system. Lighting systems for which flexibility and efficiency are key, but that do not require an online connection, can benefit from the same savings potential by using the intelligent multifunctional controller units (iMCUs) in offline mode.

Typical applications

- General lighting in public spaces
- Lighting in the vicinity of buildings
- Lighting in tunnels
- Lighting for sports' venues
- Industrial lighting

LiCS OUTDOOR

6 Lighting Control System for Outdoor Applications

Intelligent light control for outdoor applications **490**

System overview **491**

Network-capable products **492–495**
iLC – intelligent luminaire controller (built-in) 492-493
iPC – intelligent post controller (built-in) 493
iDC – intelligent data concentrator 494
iLUX – intelligent lux meter with a power line carrier interface 495

Software **496**
iCT – intelligent configuration software 496
iLIC – intelligent luminaire information centre 496

Non network-capable products **497**
iMCU – intelligent multifunctional controller unit 497

General technical details **533–540**

Glossary **541–543**

Sensors
Further sensors for the LiCS outdoor system are currently being developed. Please contact your VS representative for further details. The VS website at **www.vossloh-schwabe.com** also provides information on the current situation.

MidNight Controller
Further controllers for the LiCS outdoor system are currently being developed. Please contact your VS representative for further details. The VS website at **www.vossloh-schwabe.com** also provides information on the current situation.

Intelligent Light Control for Outdoor Applications

Power line carrier (PLC) technology enables bidirectional data transmission via the 230-V supply voltage. Without requiring additional wiring it is therefore possible to connect these light controllers to form a powerful network using either a lighting cable or a commonly available network cable in almost any environment. Data are measured with a high degree of precision at every controller connected to the network and, if required, automatically amplified. As a result, length restrictions make no difference. Vossloh-Schwabe's LiCS Outdoor system is based on this tried-and-tested technology, which has already proved itself millions of times in the most diverse applications and fields.

Vossloh-Schwabe's LiCS Outdoor system makes it possible to dim individual luminaires or entire luminaire groups. Depending on the requirements, the degree to which the lighting level is dimmed can be sensor-controlled or can comply with a preset level; the burn-in periods of discharge lamps can also be taken into consideration.
A lighting system that provides light as required therefore results in further savings potential.
Thanks to the system's convenient remote monitoring functions, it is possible to optimise maintenance processes as well as better plan maintenance work and budget for it in more detail.

Overview of functions

Independent functions form an integral part of the LiCS Outdoor controller and are common to all products. The parameters of these functions can be (re)set at any time by the customer using various tools or via the power line carrier network.

DPC (Delayed Switching for Pedestrian Crossing)
The lighting is switched off after a short delay or switched on more quickly in the vicinity of pedestrian crossings

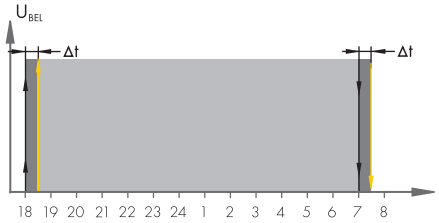

DOO (Dimmed ON/OFF)
The lighting system is switched on or off in a dimmed state; also, dimmed changeover between dimming levels with configurable time sequences

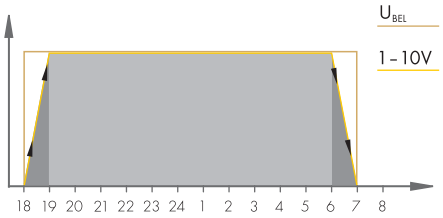

MFF (Maintenance Factor Function)
Maintenance factor function: reduction of the degree to which the luminous flux decreases over the service life of the light source.

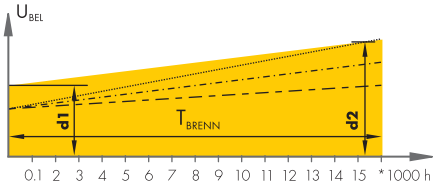

BBT (Burn-in Block Time)
Configurable dimmer block during the burn-in period of conventional light sources (can be deactivated).

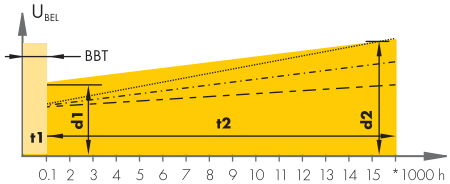

ISD (Intelligent Switching Time Dimming)
Intelligent, timer-controlled periods of dimmed light.

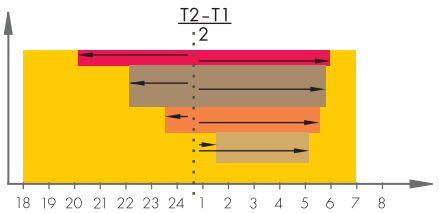

LST (Control input)
Control input with configurable behaviour and effect on the DALI/1-10 V output or the relay's two-way contact.

RCR (Ripple Control Receiver)
Sound frequency reception module for typical sound frequencies of 100 Hz to 1.7 kHz; TFR protocols on request.

Overview of the LiCS Outdoor System

Product matrix	Network-capable		Non network-capable
Software	**iLIC**	**iSITE**	–
Data concentrator	**iDC** • GPRS • IP • FO-MM • FO-SM 	**iMICO or iCTT** 	
Controller	**iLC** (for installation in luminaires) **iPC** (for installation in the luminaire pole) **iRFS** (controller) 	**iMCU** (controller) **EHXd** (electronic ballasts) **iRFS** (controller) 	**iMCU Light Controller** for independent operation **iRFS** (controller) 
Sensors	**iLUX** (lux meter) / **iRAS** (radar sensor) 	**iRAS** (radar sensor)	**iRAS** (radar sensor) **iRFS** (wireless bridge)
Operating unit	**iTAB** (tablet) **iCTI** (hand-held operating device) 	–	–

The technical documentation for the iMICO and iCTT MidNight controllers as well as the associated iSITE software can be found online at **www.vossloh-schwabe.com**.
Please contact your VS representative for further details.

Expansion Options for the LiCS Outdoor System

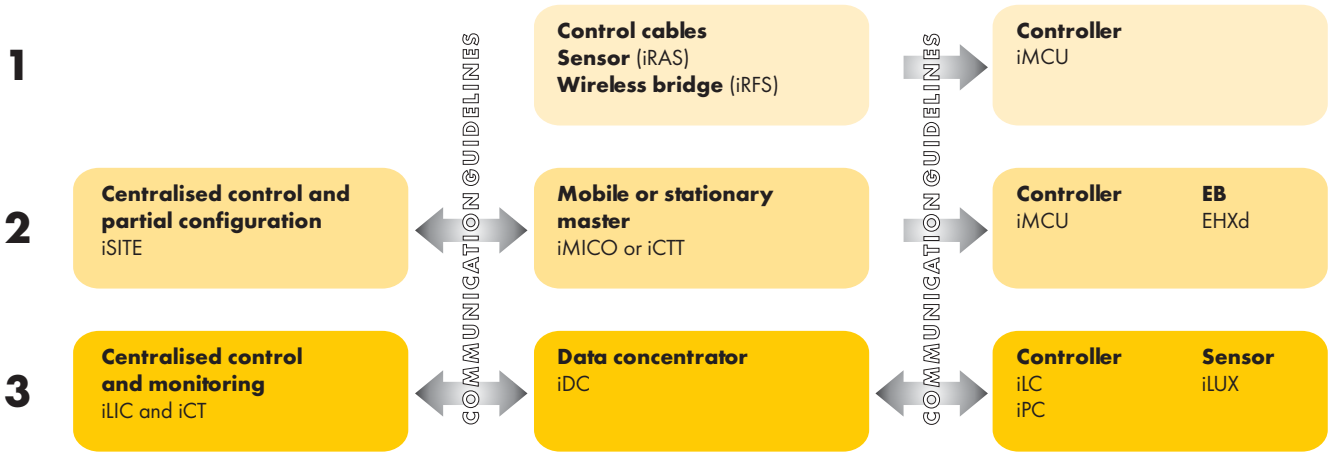

Light Control Gear for Outdoor Luminaires

Vossloh-Schwabe's outdoor light control gear works with power-line-carrier communication using the C/B CENELEC band. Thanks to the integrated functions, they can be used as independent control components or be integrated into a light management system to centrally monitor and regulate individual luminaires.

The LiCS outdoor system enables control of luminaires operated with magnetic ballasts (low-lost ballast and low-loss ballast ECO) as well as luminaires with up to four dimmable electronic ballasts with a 1–10 V or DALI interface.

The product is suitable both for new installations as well as for classic retrofits. The particularly flat design of the controller enables installation in almost all luminaires, especially luminaires featuring LED technology.

Control input L_{ST} can be used for a control phase, a motion detector, a key switch, a light sensor or, if operated independently, to receive simple protocols. Please contact your VS representative for further details.

The controller is integrated into a LON power-line-carrier light management system that requires a network connection to a central module (iDC). Communication via power line carrier occurs in accordance with standardised directives EN 14908-1, EN 14908-3 and the Lonmark® OLC profile (outdoor luminaire controller profile).

Installation and integration requires further products that are supplied in accordance with customer specifications. Once installed in a light management system, the controller delivers various performance data and status reports independently of the connected ballast. The following calibrated performance data are available within a tolerance of 1%: voltage, current, power factor, energy consumption, lighting hours and temperature. Limits must be defined for each measured value, which are then monitored in the controller with a report being transmitted to the master system if limits are exceeded. As a result, the controller itself already intelligently monitors the luminaire.

iLC – intelligent Luminaire Controller (built-in)

This light controller was developed for installation in a luminaire. Without requiring additional wiring, it can be integrated into a light management system.



iLC – intelligent Luminaire Controller (built-in)

Technical notes

Dimensions (LxWxH): 93 x 58 x 30 mm
Control output: DALI or 1–10 V for max. 4 EBs, Short-circuit-proof
Bistable relay output: closing contact, control output ECO ballast: 10 mA for powerreduction relays
Connection terminals: 0.5–1.5 mm²
Operating temperature: –25 to 85 °C
Betriebstemperatur: –25 to 80 °C
Humidity: non-condensing
Degree of protection: IP20, protection class I

Galvanic isolation

The electronic ballast does not feature potential isolation between input and output: as soon as the electronic ballast is connected to the controller, the control input of the electronic ballast is not potential-free.

Typical applications

Lighting for public spaces
Lighting in the vicinity of buildings
Lighting for tunnels

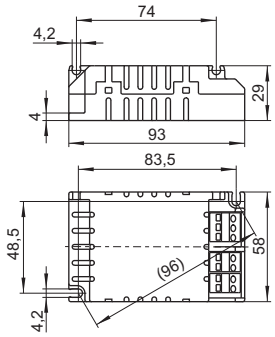

DPC MFF ISD DOO
BBT LST RCR

	Type	Ref. No.	Voltage AC V, Hz	Power consumption W	Control input L_{ST} V	Switching output V	Switching current A (λ = 0.8)	Weight g
new	iLC	**186233**	90–230, 50	< 1,2	230	230	4	100

Operating Elements

The parameters of the iLC, iPC and the iMCU light control devices can be (re)set at any time using various tools. A hand-held operating unit is available with which the iMCU can be updated with modified parameters even without an external power supply. The parameters of the iLC and iPC controllers are set using the power line carrier via the iDC data concentrator.

Further product details are available at **www.vossloh-schwabe.com**.



iTAB **iCTI**

Type	Ref. No.	Description	Dimensions LxWxH (mm)	Weight g
iTAB	**186251**	Intelligent tablet	266x212x17	970
iCTI	**186246**	Intelligent hand-held operating device	180x65x40	200

iPC – intelligent Pole Controller (built-in)

This light controller was developed for installation in a luminaire pole. It can also be integrated into a light management system without requiring additional wiring.

Technical notes
Dimensions (LxWxH): 250x60x55 mm
Control output: DALI or 1–10 V for max. 4 EBs, Short-circuit-proof
Bistable relay output: closing contact
Control output ECO ballast: 10 mA for power-reduction relays
Connection cable: 1 m (special configurations are available on request)
Storage temperature: –25 to 85 °C
Operating temperature: –25 to 80 °C
Humidity: non-condensing
Degree of protection: IP20, protection class II

Galvanic isolation
The electronic ballast does not feature potential isolation between input and output: as soon as the electronic ballast is connected to the controller, the control input of the electronic ballast is not potential-free.

Typical applications
Lighting for public spaces
Lighting in the vicinity of buildings



iPC – intelligent Pole Controller (built-in)

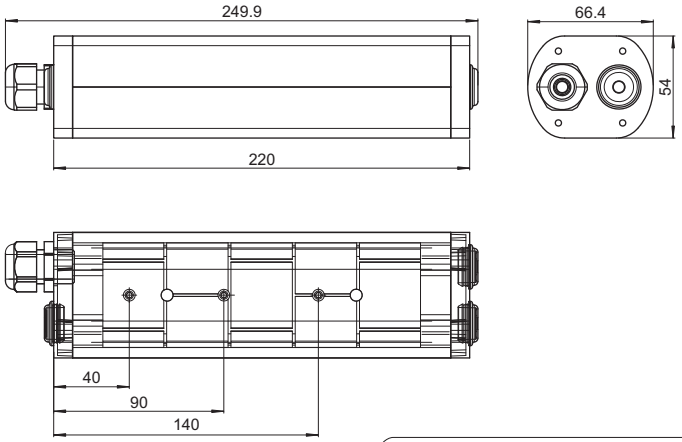

DPC MFF ISD DOO
BBT LST RCR

	Type	Ref. No.	Voltage AC V, Hz	Power consumption W	Control input L_{ST} V	Switching output* V	Switching current A (λ = 0.8)	Suitable for iLUX light sensors	For ripple-control sound frequency**	Weight g
new	iPC	**186234**	90–230, 50	< 1.2	230	230	4	no	no	360
new	iPC-Lux	**186235**	90–230, 50	< 1.2	230	230	4	yes	no	360
new	iPC-RC	**186236**	90–230, 50	< 1.2	230	230	4	no	yes	360

* Optionally available with a second switching output on request

** Protocols on request

For ripple-control iDC – intelligent Data Concentrator

The iDC forms the master of the light management system and functions as the central connection interface to the software of the master system. The product can be programmed and also features application programs that are perfect for controlling lighting systems.

The following functions are an integral part of the product: timer programs, monitoring of limit values plus alarm function and alarm transmission, data conversion, data logging and email client.

Fitted with various interfaces such as S0 for counter registration, the M bus for remote counter reading or the MOD bus for extended sensor and actuating functions, the iDC can adapt to suit almost any control task.

The iDC also provides a very well documented, web-based XML/SOAP interface or an optionally available OPC driver (open process control) to the SCADA (Supervisory Control and Data Acquisition) system. This makes it possible to integrate the iDC also into any BA (Building Automation) or control system.

The iLIC software was specifically developed to enable control of the iDC. Various extension options are available to suit common communication requirements: GPRS, IP (CAT5), Fibre optic (FO) Single Mode, Fibre optic (FO) Multi Mode, and optionally also WLAN on request.

Technical notes

Dimensions (BxWxT): 280x230x112 mm
Material: aluminium AlSi12 (Fe)
Drill holes for cables:
2 PG metric fittings (25x1.5 mm)
2 PG metric fittings (32x1.5 mm)
1 PG metric fittings (20x1.5 mm)
Interfaces for power line carriers
Inputs: 2 x 30 V DC digital inputs
Optionally extendable using a cut-off relay for 230 V AC
2 impulse-counter inputs typical of S0
Outputs: 2 relay outputs 230 V AC; 10 A
Ethernet port 10/100BaseT, auto-selecting, RS232 interface for GSM/GPRS modem
LON power line carrier communication:
Protocols: in acc. with ANSI CEA 709.1 / EN 14908-1 on the supply voltage (tri/single phase)
Transmission: in acc. with ANSI CEA 709.3 / EN 14908-3
IP communication: XML / SOAP, http, FTP, UDP
FME antenna connection: male
Storage temperature: -25 to 85 °C
Operating temperature: -25 to 60 °C
Humidity: non-condensing
Degree of protection: IP65, protection class I

Special features

The product can be commissioned using the VS iCT tool.



iDC – Data Concentrator

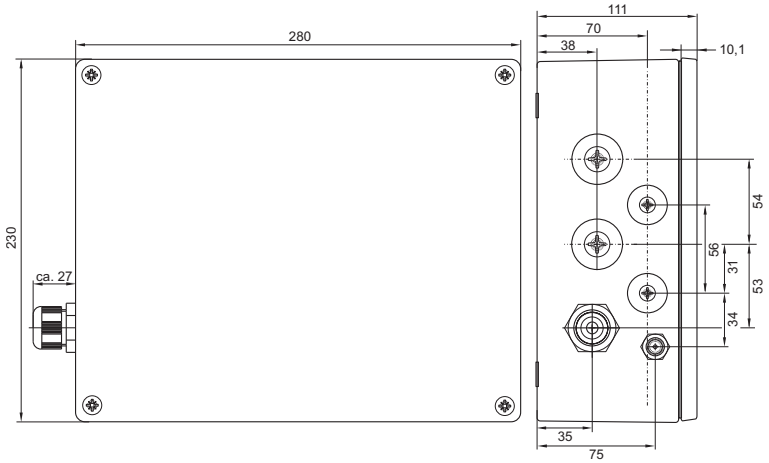

	Type	Ref. No.	Voltage AC V, Hz	Average power consumption VA	Transmission mode VA	Weight g
new	iDC-GPRS	**186230**	230±10%, 50±1%	standby 7VA	12	4400
new	iDC-IP	**186237**	230±10%, 50±1%	standby 7VA	12	4400
new	iDC-FO-MM	**186238**	230±10%, 50±1%	standby 7VA	12	4400
new	iDC-FO-SM	**186239**	230±10%, 50±1%	standby 7VA	12	4400

iLUX – intelligent Lux Meter with a Power-Line-Carrier Interface

The high-quality light sensor, upgraded with a special variant of the iPC controller for installation in the luminaire pole, directly measures and delivers digital light metrics in lux to a light management system for the purpose of lighting control.

Lighting systems operated with or without a light management system can be switched on or off at a specific lux value via internal relays. The measured lux values can then be transmitted to the lighting system via the power line. Depending on the respective lighting level required in each case, it is therefore possible to independently control luminaires in different areas, e.g. at major and minor roads, pedestrian crossings and in parks.

The compact sensor can be fixed to the luminaire pole or a wall using the enclosed mounting bracket.



iLUX – Light sensor

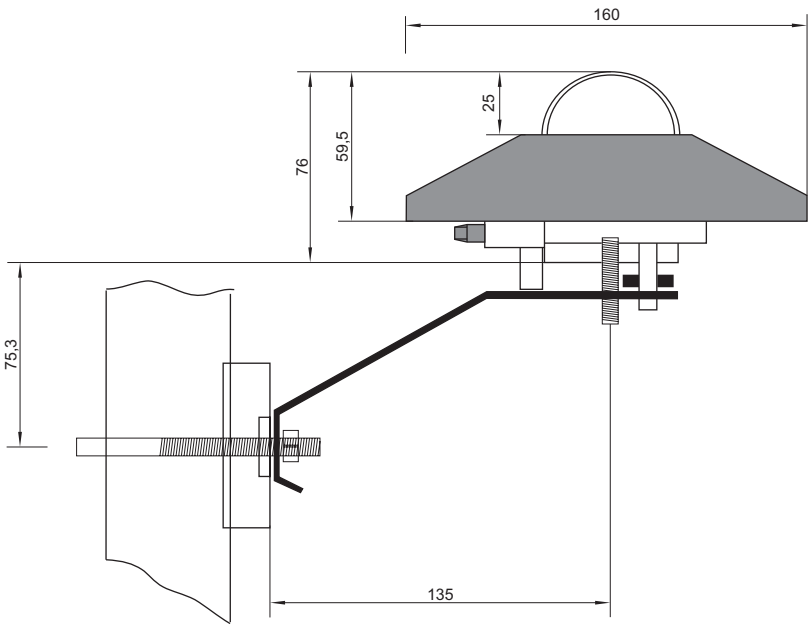

Technical notes

Dimensions (LxWxH: 165x165x104 mm
Sensor casing: aluminium with a PC cover,
Sensor unit protected by opal glass
Connection cable to the controller: 10 m
(special configurations available on request)
Storage temperature: –25 to 85 °C
Operating temperature: –25 to 80 °C
Humidity: non-condensing
Degree of protection: IP65
Weight of mounting bracket: 300 g
For details on the casing and connections of the iPC controller (intended for installation in luminaire poles), see page 493

Typical applications

Lighting for public spaces
Lighting in the vicinity of buildings

	Type	**Ref. No.**	Note	Weight g
new	iLUX	**186231**	Use only in combination with iPC-LUX (Ref. No.: 186235)	1000

iCT – intelligent Configuration Software

For outdoor luminaire control

The software was specifically developed to integrate iLC or iPC luminaire controllers in the iDC. This enables quick and convenient installation of all controllers in network segments. Commissioning can also be completed quickly by using an optional barcode scanner to read the unique barcode identification number printed on each controller. The parameters of the controllers of the individual luminaires as well as luminaire groups can be set in accordance with the OLC Lonmark® profile. The software is available only in combination with the iDC, the intelligent data concentrator.

new **Ref. No.: 186242**



iLIC – intelligent Luminaire Information Centre

For outdoor luminaire control

The luminaire information centre is the central control instrument of a light management system. All connected luminaires can be controlled, monitored and displayed using a web-based server application.

The server-based software supports both Windows and Linux operating systems. Firefox or Internet Explorer are the frontend applications to operate, control or display the light management system. The following actions can be controlled via the software:

- Switching individual luminaires on or off ahead of defined luminaire groups
- Defining the most diverse timer settings
- Evaluation and display of the lighting system status depending on various types of error message
- Evaluation of energy consumption at individual luminaire and luminaire-group level
- Graphic display of all acquired data over time (voltage, current, power, temperature, power factor, lighting hours, ...)

new **Ref. No.: 186243**

Based on the software design, the lighting system displays information as a tree-like structure showing city, suburb, street, luminaire or can be broken down according to other criteria. The multi-client software also makes it possible to restrict rights and functions for different people or groups of people depending on their level of authorisation.

As the software is a wholly web-based application, system maintenance can be carried out via the web (global) or can be restricted to just the company using its LAN network, all depending on the system structure. Numerous users can access the system at the same time. Optional interfaces are also available to connect to other asset management systems.

System requirements

- Server: state-of-the-art
- RAM: 4GB HD: 2TB
- CPU: min. Dual Core, depending on the scope of the project
- Operating system: XT, Windows 7, Linux, Distribution, VM operation is possible
- Data security: min. RAID 1, recommended RAID 5



iMCU – intelligent Multifunctional Controller Unit

For outdoor luminaire control

This light controller unit was specifically designed for independent operation to enable control of street lighting or lighting close to buildings.

The unit is suitable for use with luminaires operated with magnetic ballasts (low-loss ballasts and low-loss ballasts ECO) as well as with dimmable electronic ballasts that support a 1–10 V or DALI interface.

The product is suitable both for new installations as well as for classic retrofits. The controller's particularly compact design facilitates installation in almost any luminaire, especially luminaires with LED technology.

Depending on the given task, the product can replace one or more individual products. It also enables control of conventional magnetic ballasts with coil tapping points without needing any other components. The control input LST can be used to connect a control phase, a motion detector, a key switch or a light sensor, but can also be used to receive simple data protocols.

Operating units

The parameters of the iMCU can be (re)set at any time using various tools. A simple hand-held unit (which does not require an additional power supply) is available with which the installed controller can be updated with modified parameters (see page 493).

Alternatively, a Windows-based program can be used that provides extended functions for stationary applications. To suit the specific requirements of the OEM market, the controller can be supplied with software protection mechanisms. Please contact us directly for further information.

Technical notes

Dimensions (LxWxH): 83x30x19 mm
Control output: DALI or 1–10 V for max. 1 EB, short-circuit-proof
Relay contacts: potential-free (input, opener, closing contact)
Connection terminals: 0.5–1.5 mm²
Storage temperature: –25 to 85 °C
Operating temperature: –25 to 80 °C
Humidity: non-condensing
Degree of protection: IP20, protection class I

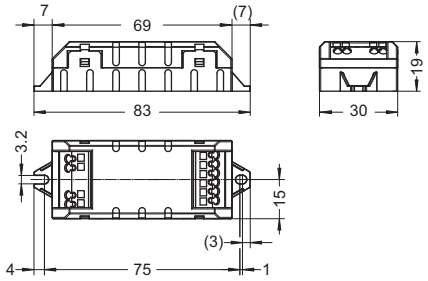



iMCU

Galvanic isolation

The electronic ballast does not feature potential isolation between input and output: as soon as the electronic ballast is connected to the controller, the control input of the electronic ballast is not potential-free.

Typical applications

Street lighting or lighting in the vicinity of buildings

DPC MFF ISD DOO
BBT LST RCR

	Type	Ref. No.	Voltage AC V, Hz	Power consumption mW	Control input LST V	Switching current A (λ = 0.8)	Weight g
new	iMCU	**186232**	220–230, 50	< 500	230	4	30

6–80 W EMERGENCY LIGHTING MODULES





EMERGENCY LIGHTING

Emergency lighting systems spring to life any time normal artificial lighting systems fail. Emergency lighting is designed to ensure that work can continue without risk, that staff can safely leave any workplaces involving special hazards and that there is sufficient lighting to illuminate rescue paths/routes as well as to avoid panic situations.

As power cuts result in a risk to safety, legislation has been enacted in the form of the Health and Safety at Work Directive (Europe) and the Health and Safety at Work Acts of the individual European countries (e.g. Germany), all of which stipulate that emergency lighting must be provided. The requirements placed on emergency lighting installed in places of public assembly and public buildings are governed by supplementary directives and laws.

Vossloh-Schwabe's emergency lighting units are designed for use with T5, T8 and compact fluorescent lamps and can be operated with electromagnetic or electronic ballasts.

VS emergency lighting units are suitable for both continuous and standby circuits with a nominal operating period of 1 or 3 hours.

7 Emergency Lighting Modules for TC and T Lamps

Emergency lighting modules with self-diagnosis function **500–501**

Technical details for emergency lighting modules **502–508**
General technical details 533–540
Glossary 541–543

Emergency Lighting Modules 6 to 80 W with Self-Diagnosis Function

EMXs – Emergency lighting modules

For one-, two-, three- or four-lamp operation with standard and dimmable electronic or magnetic ballasts
EB phase is switched off during emergency operation
Short circuit protection
RoHS-compliant (excluding rechargeable batteries)
5-pin technology and therefore EMC-compliant even during emergency operation
Suitable for protection class I
EN 61347-1, EN 61347-2-7
Suitable for systems in accordance with VDE 0108 or EN 50172
Not suitable for lamps with an integrated starter
Cyclic charging of the NiMH battery is micro-processor controlled, which can extend battery life by up to 30%
Dimensions (LxWxH): 210x31.4x21.5 mm
Fixing hole distance: 205.5 mm
Nominal voltage: 230 V ±10%, 50–60 Hz
Ambient temperature t_a: 0 to 50 °C
Unit: 25 pcs.

These VS emergency lighting modules include an automatic self-diagnosis feature that performs a two-minute function test of the device, the lamp and the battery every seven days.
In addition, the operating period is tested every 12 months with subsequent battery reactivation.

Optical status display

- Red LED, flashing intermittently: defective lamp. The status display will be reset approx. one minute after the fault has been rectified.
- White LED, not illuminated: if connected to the power supply, the LED must turn green after a maximum of five minutes. If not, the device either has no voltage supply or the emergency lighting module is defective.
- Red LED, permanently flashing: battery capacity is too low or the battery supply line has been interrupted.
- Green LED: fully functional.

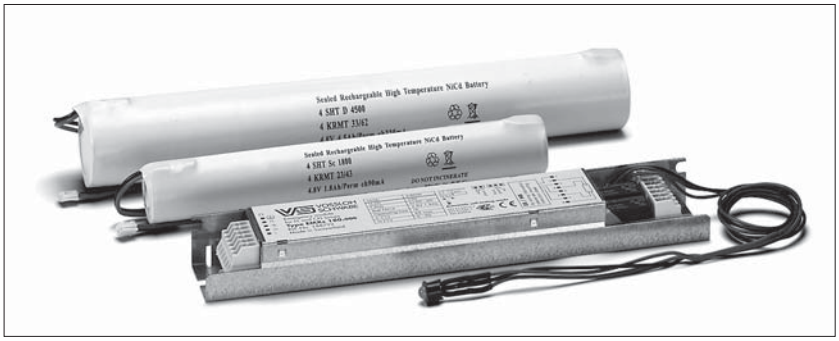

Emergency lighting module

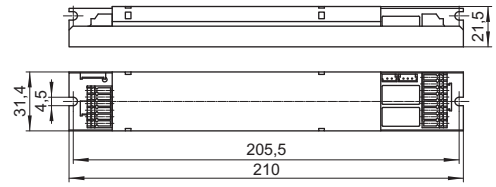

LED

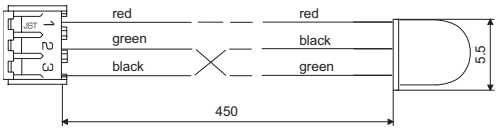

Rechargeable battery

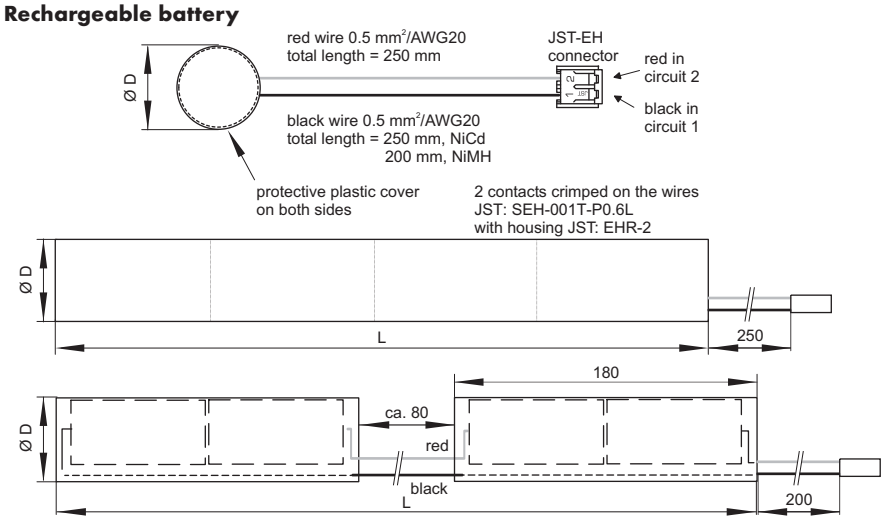

Emergency Lighting Modules 6 to 80 W with Self-Diagnosis Function

EMXs – Emergency lighting modules

Type	**Ref. No. Module**	**Ref. No. Battery**	Nominal operating period hrs.	Rechargeable battery type	Dimensions LxD (Ø) of battery mm	Test function	Weight module g	Weight battery g
EMXs 180.000	**188792**	**188823**	1	4.8V 1.8Ah NiCd	1 / 190 x 23	automatic	160	200
EMXs 180.001	**188793**	**188824**	3	4.8V 4.5Ah NiCd	1 / 240 x 33	automatic	160	490
EMXs 180.002	**188794**	**188825**	1	4.8V 1.8Ah NiMH	1 / 200 x 17	automatic	160	140
EMXs 180.003	**188795**	**188826**	3	4.8V 4.5Ah NiMH	2 / 450 x 19	automatic	160	320

Circuit diagrams see page 506-508

Holders for Rechargeable Batteries for Emergency Lighting Modules

Material: PC (188828: PBT)
Type: Rechargeable Battery Holder

Ref. No.	For rechargeable battery type	Dimensions (mm) a	b	c	d	e	f
188827	4.8V 1.8Ah NiCd	35.0	18.0	26.3	26.7	13.0	5.5
188828	4.8V 4.5Ah NiCd	39.0	32.2	36.2	37.3	12.4	6.0
188829	4.8V 1.8Ah NiMH	22.5	15.0	22.8	22.5	8.0	4.0
188829	4.8V 4.5Ah NiMH	22.5	15.0	22.8	22.5	8.0	4.0

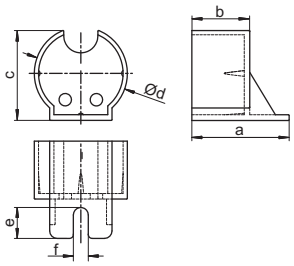



It is recommended to use two holders per rechargeable battery to ensure optimum hold.

Table of suitable lamp types

Lamp type	Lamp nominal output W
T8	15, 18, 32, 36, 58, 70
T5 HE	14, 21, 28, 35
T5 HO	24, 39, 49, 54, 80
T5	6, 8, 13
T-R5 (T-R16)	22, 40, 55, 60
T-R (T29-R)	22, 32, 40
TC-L/TC-F	18, 24, 36, 40, 55, 80
TC-DEL	10, 13, 18, 26
TC-TEL	13, 18, 26, 32, 42, 57, 70
TC-SEL	7, 9, 11
TC-DD (2D)	10, 16, 21, 28, 38, 55

Luminous flux factor of lamps during emergency operation

Lamp nominal output W	Luminous flux factor* %
6	43.0
8	32.0
18	13.0
28	9.0
32	7.0
35	7.0
36	7.0
49	4.7
54	4.3
55	4.7
58	5.2
70	4.3
80	3.7

* Theoretically defined reference values at 25°C ambient temperature

7 Emergency Lighting Modules for TC and T Lamps

Assembly instructions for emergency lighting modules **502–509**
Electrical installation 502–504
Emergency lighting module display 505
Circuit diagrams 506–508

General technical details **533–540**

Glossary **541–543**

Emergency lighting modules are designed for operation with 6 to 80 W, 4-pin fluorescent lamps.
Luminaires with integrated emergency lighting modules can be operated using a continuous or standby circuit.

Technical specifications	EMXs emergency lighting modules
Permissible mains voltage	230 V ±10%
Permissible mains frequency	50–60 Hz
Power consumption with standby circuit	3 W
Nominal period of operation	1 to 3 hours, depending on the type of rechargeable battery
Batteries	NiCd or NiMH
Ambient temperature	0* to 50°C
Charging time	24 hrs
Protection class	1
Degree of protection	IP20
Certification	CENELEC
Tested in accordance with	EN 61347-2-7
Suitable for systems compliant with	VDE 0108 / EN 50172
Casing	Metal (zinc-plated)
Installation outside the luminaire	Permissible lead length between the emergency lighting module and the lamp must not exceed two metres.
Luminous flux factors during emergency operation	See the table on page 501, values apply to 25 °C ambient temperature.

* Ignition in progress; the values of the colour rendering index and the luminous flux factor may deviate.

Assembly Instructions for Emergency Lighting Modules

For mounting and installing of emergency lighting modules

If the emergency lighting module is integrated in the luminaire, the LED and battery have to be wired separately, i.e. not in parallel with the mains or lamp.
Emergency lighting modules must be fixed in a suitable spot within the luminaire (4-mm bore holes for mounting).
In the interest of maximising battery capacity and service life, care must be taken to ensure the battery is positioned at the coolest part of the luminaire.
The ambient temperature of the battery must not exceed 50 °C. Emergency lighting modules must not be mounted on surfaces that ignite, melt or undergo some other thermal change at a temperature of 60 °C. Moreover, emergency lighting modules must not be operated in explosion-endangered enclosed spaces.

Electrical installation

The respective ordinances and standards valid at the place of operation must be observed for installation purposes. Emergency lighting modules and luminaires must only be installed by trained staff. Operating voltages exceed 50 V. Caution: potentially fatal hazard!

Prior to first operation of emergency luminaires, all covers must be attached. Furthermore, care must be taken to ensure that the supply voltage complies with the specifications on the type plate and the protective conductor is connected.

1. Fuse
2. Light switch
3. Room lighting
4. Emergency luminaires

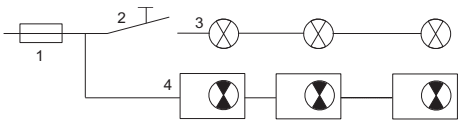

Emergency luminaires must be connected to a direct phase to enable mains monitoring and ensure constant charge retention. This phase must be connected to the group fuse of the regular room luminaire. Emergency luminaires are generally delivered with uncharged batteries and must be connected to the mains for at least 48 hours to be fully functional or for approx. 10 minutes for mains operation in the case of a continuous circuit.

Additional information for optimising EMC

Information on the installation of electronic ballasts for optimising EMC

To ensure good radio interference suppression and the greatest possible operating safety, the following points should be observed when installing electronic ballasts:

- Conductors between the EB and the lamp (HF conductors) must be kept short (reduction of electromagnetic interference). High-potential lamp conductors must be kept as short as possible, in particular with tubular lamps.
  Lamp conductors of this kind are labelled with an * in the wiring diagram on the type plate.
- Mains and lamp conductors must be kept separate and if possible should not be laid in parallel to one another. The distance between HF and mains conductors should be as large as possible, ideally > 5 cm.
  (This prevents the induction of interference between the mains and lamp conductors.)
- The mains conductor within the luminaire must be kept short (to reduce the induction of interference).
- Devices must be properly earthed. EBs require secure contacts to the luminaire casing or must be earthed using a PE connection. This PE connection should be effected using an independent conductor to achieve better dissipation of the leak current. EMC improves at frequencies greater than 30 MHz.
- The mains conductor must not be laid too close to the EB or the lamp (this is especially important in the event of through-wiring).
- Mains and lamp conductors must not be crossed. Should this be impossible to avoid, conductors should be crossed at right angles to one another to avoid inducing interference between mains and HF conductors.
- Should conductors be wired through metal parts, such conductors must always be additionally shielded (e.g. with an insulating sleeve or grommet).

Maintenance

With regard to system maintenance and control, care must be taken to ensure compliance with any ordinances and standards governing emergency lighting at the place of installation.
Prior to opening lamp covers, the following procedure must be observed:

1. Disconnect luminaires from the mains voltage.
2. Remove cover.
3. Disconnect battery from the emergency lighting module (disconnect the plug).

VS recommends connecting control LEDs to be visible on the outside of emergency luminaires to enable simple and regular control of emergency luminaires and emergency lighting modules.

Changing batteries

Batteries need to be replaced if the operating period of luminaires falls short of 60 minutes in the case of 1-hour operation and 180 minutes for 3-hour operation, respectively. Emergency lighting modules have a status display for this purpose.
Spent batteries must be replaced with the manufacturer's original batteries only. Furthermore, the polarity of the batteries must be strictly observed. The battery supply lines of the emergency lighting module are marked as follows:
red = **+**; black = **–**

Emergency lighting module display

Normal operation is indicated by a green LED. During emergency operation or for as long as the battery remains fully discharged, the LED is off (i.e. does not glow). The LED will flash red if the battery is missing or not properly connected.

Automatic test of emergency lighting modules

In the case of emergency luminaires with emergency lighting modules, the operational readiness of the device, the lamp and the battery is tested automatically every seven days. In addition, battery capacity is measured during a simulated loss of mains power every 12 months.

The first capacity test will be carried out seven days following initial installation or any repair work. The LED must be checked after the first self-test. A green LED indicates all is in working order, any other display indicates a problem.

The device features a two-colour LED display to indicate that the emergency luminaire is ready for use.

Optical status display

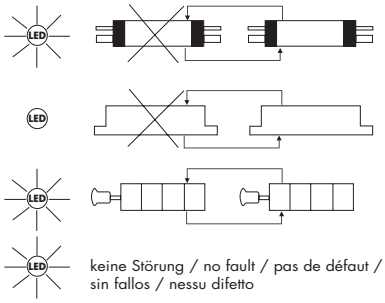

keine Störung / no fault / pas de défaut / sin fallos / nessu difetto

Emergency luminaires merely require regular visual inspection of the status display (LED) and the luminaire itself.

Red LED, flashing intermittently	During initial operation, a lamp recognition test is first carried out. Prior to and during this test, the LED will be red and flash intermittently.
White LED, not illuminated	If connected to mains power, the LED must turn green after a maximum of five minutes. If not, the device has no mains voltage or the emergency lighting module is defective.
Red LED, continuous flashing	Battery capacity is too low or the battery supply line has been interrupted. The warning light will go off again as soon as the problem has been rectified.
Green LED	Fully functional.

Notes

Vossloh-Schwabe accepts no liability for any direct, indirect or incidental damage caused by putting a device to any improper use, i.e. any use not expressly permitted by VS. Similarly, Vossloh-Schwabe accepts no liability for third-party claims arising from putting a device to any improper use, i.e. any use not expressly permitted by VS. Emergency lighting modules must not be opened or modified in any way. The components of emergency lighting modules must be replaced with original parts only.

Should emergency lighting modules be damaged in a way that suggests it cannot be operated safely, the luminaires or emergency lighting modules, respectively, must not be operated.

VS reserves the right to make changes to diagrams, weights, tables of dimensions or other such details included in the catalogue or instructions for use without prior notice if such changes prove to be necessary or are made as a result of technological progress. VS emergency lighting modules are patent protected.

Any act of producing counterfeit VS products will be prosecuted according to criminal and civil law.

Caution!

Emergency lighting modules from VS must not be operated with amalgam lamps.

Circuit Diagrams

For VS emergency lighting modules

Notes for wiring:

- The distance between mains lead and lead 8 should be as large as possible
- Leads 2/4/6/8 must be kept short

Circuit diagrams – 1-lamp operation

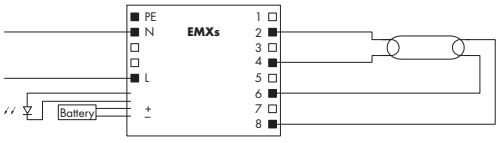

1-lamp operation
without electronic or electromagnetic
ballast (continuous circuits)

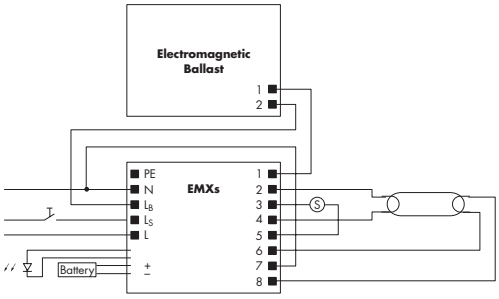

1-lamp operation
with electromagnetic ballast

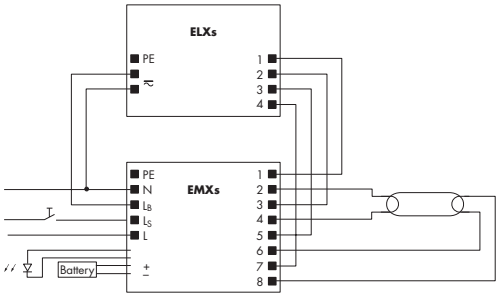

1-lamp operation – Warm start
with electronic ballast ELXs

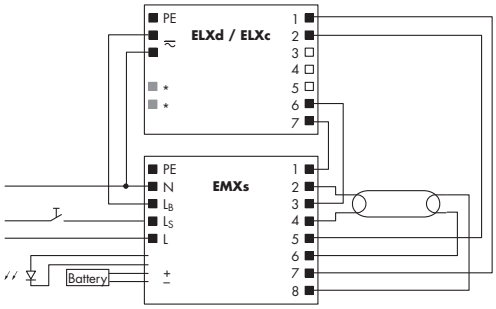

*nur bei dimmbaren Vorschaltgeräten/only with dimmable ballasts/juste avec ballasts graduables/solo con alimentatori dimmerabili/sólo con reactancia regulable

1-lamp operation – Dimming / Warm start
with electronic ballast ELXd / ELXc

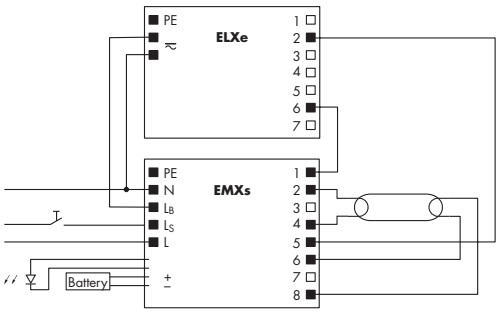

1-lamp operation – Instant start
with electronic ballast ELXe

Circuit diagrams – 2-lamp operation

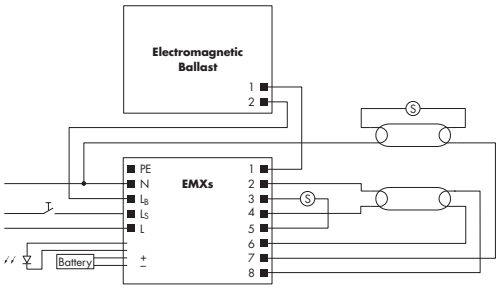

2-lamp operation
with electromagnetic ballast

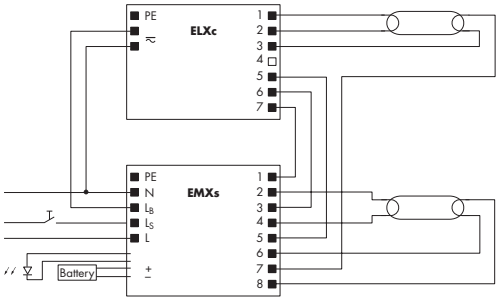

2-lamp operation – Warm start
with electronic ballast ELXc

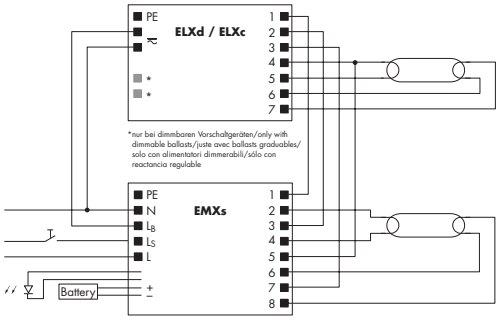

2-lamp operation – Dimming / Warm start
with electronic ballast ELXd / ELXc

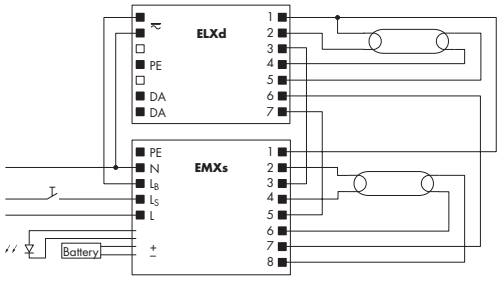

2-lamp operation – Dimming
with electronic ballast ELXd

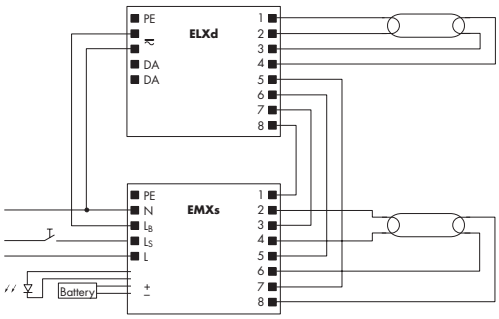

2-lamp operation – Dimming
with electronic ballast ELXd

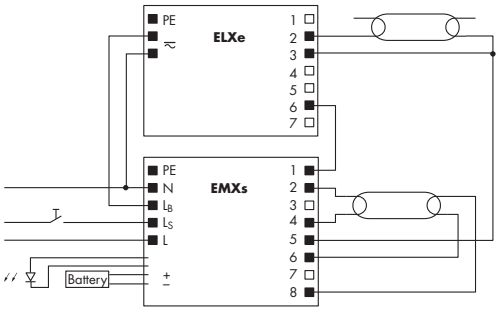

2-lamp operation – Instant start
with electronic ballast ELXe

Circuit diagrams – 3-lamp operation

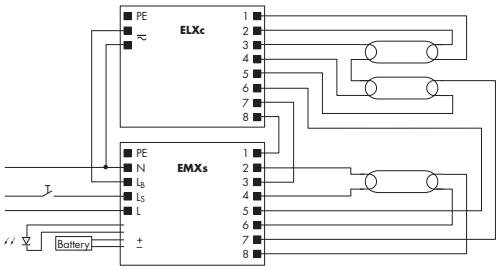

3-lamp operation – Warm start
with electronic ballast ELXc

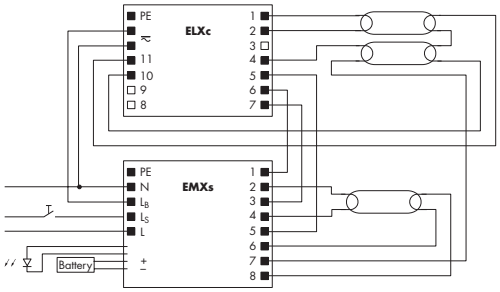

3-lamp operation – Warm start
with electronic ballast ELXc

Circuit diagrams – 3-lamp operation

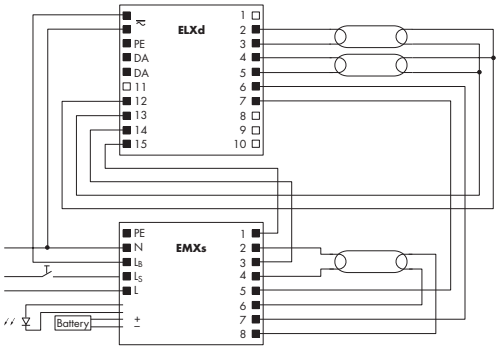

3-lamp operation – Dimming
with electronic ballast ELXd

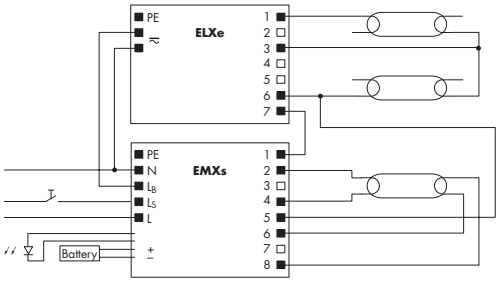

3-lamp operation – Instant start
with electronic ballast ELXe

Circuit diagrams – 4-lamp operation

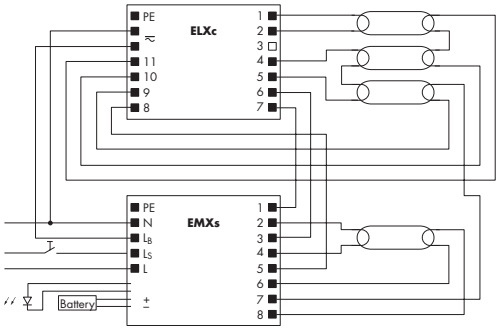

4-lamp operation – Warm start
with electronic ballast ELXc

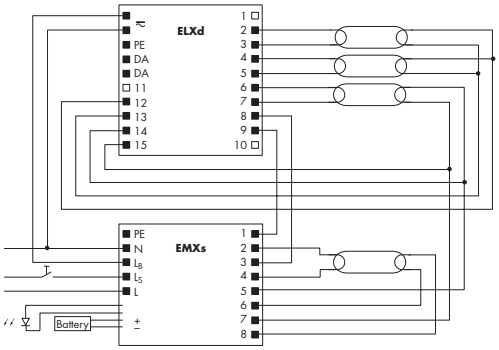

4-lamp operation – Dimming
with electronic ballast ELXd

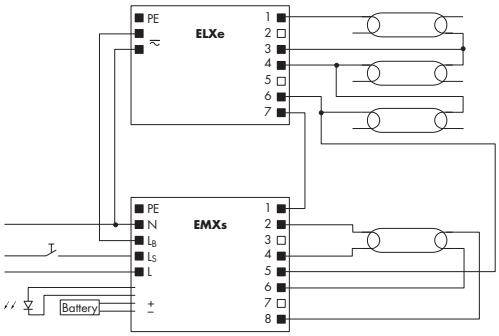

4-lamp operation – Instant start
with electronic ballast ELXe

SYSTEM-OPTIMISING COMPENSATION





PARALLEL CAPACITORS

Capacitors are designed to compensate inductive reactive current of discharge lamps in 50/60 Hz networks when operated with electro-magnetic ballasts. As required by utility companies, capacitors serve to compensate the reactive current generated by the respective ballast. A power factor of $\lambda \geq 0.9$ is achieved.

In addition, capacitors can also be used to compensate or generate phase displacements. Careful selection of the raw materials as well as special thermal treatment of the capacitor coil guarantee a long service-life and stable capacitance.

8 Parallel Capacitors

Parallel capacitors **512–515**

Technical details for parallel capacitors **516–524**
General technical details 533–540
Glossary 541–543

Parallel Connected Capacitors with Break-action Mechanism

Capacitors type B

Casing: aluminium
Filling material: based on vegetable oil
Fastening: male nipple
with nut and washer included
Discharge resistance
Overpressure protection
On request further capacities or connectors



A Push-in twin terminals 0.5–1 mm²

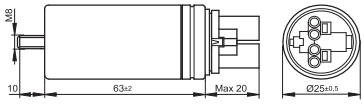

B Double spade connector 6.3 x 0.8 acc. to IEC 61210

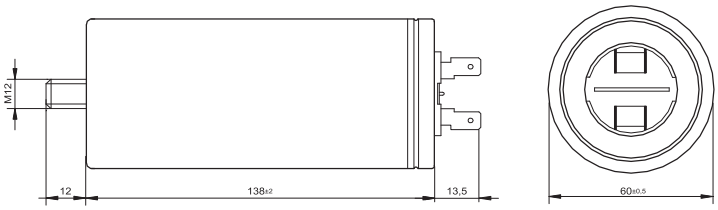

Parallel Connected Capacitors with Break-action Mechanism

Capacitors type B

Ref. No.	Capacity µF	Temperature range °C	Drawing	Ø (D) mm	Length (L) mm	Male nipple/ length (mm)	Weight g	Unit pcs.
250 V, 50/60 Hz								
536378	2.0	-40 to 100	A	25	63	M8x10	85	100
536379	4.0	-40 to 100	A	25	63	M8x10	85	100
536380	6.0	-40 to 100	A	25	63	M8x10	85	100
536381	8.0	-40 to 100	A	25	78	M8x10	90	100
536382	10.0	-40 to 100	A	30	78	M8x10	95	100
536383	12.0	-40 to 100	A	30	78	M8x10	95	100
536384	13.0	-40 to 100	A	30	78	M8x10	95	100
536385	16.0	-40 to 100	A	35	78	M8x10	100	81
536386	18.0	-40 to 100	A	35	78	M8x10	100	81
536387	20.0	-40 to 100	A	35	78	M8x10	100	81
536388	25.0	-40 to 100	A	40	78	M8x10	110	64
536389	30.0	-40 to 100	A	35	103	M8x10	115	81
536390	32.0	-40 to 100	A	35	103	M8x10	115	81
536391	35.0	-40 to 100	A	40	103	M8x10	130	64
536392	40.0	-40 to 100	A	40	103	M8x10	130	64
536393	45.0	-40 to 100	A	40	103	M8x10	130	64
536394	50.0	-40 to 100	A	45	103	M8x10	160	49
536395	55.0	-40 to 100	A	45	103	M8x10	160	49
536396	60.0	-40 to 100	A	45	103	M8x10	200	49
380–450 V, 50/60 Hz								
536397	13.0	-40 to 85	A	35	103	M8x10	115	81
536398	18.0	-40 to 85	A	40	103	M8x10	130	64
536399	28.0	-40 to 85	A	45	103	M8x10	130	49
536400	32.0	-40 to 85	A	45	103	M8x10	130	49
536401	37.0	-40 to 85	A	50	103	M12x12	220	36
536402	50.0	-40 to 85	A	55	103	M12x12	240	36
536403	55.0	-40 to 85	B	50	128	M12x12	250	36
536404	60.0	-40 to 85	B	55	128	M12x12	250	36
536405	85.0	-40 to 85	B	60	138	M12x12	300	36

Parallel Connected Capacitors 250 V, 50/60 Hz

Capacitors type A

Casing: plastics, white or aluminium
Fastening: male nipple
with nut and washer included
Discharge resistance
Optional: thermal cut-out,
European wide patent
On request with alternative capacities, connection terminals, mounting options, casing materials or with a thermal fuse as well as versions with IDC terminal for the automatic luminaire wiring



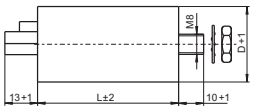



Ref. No.	Capacity µF	Temperature range °C	Ø (D) mm	Length (L) mm	Male nipple/ length (mm)	Push-in twin terminals	Weight g	Unit pcs.
Plastic casing								
500296	2.0	-40 to 85	25	57	M8x10	0.5 - 1 mm²	22	530
500299	2.5	-40 to 85	25	57	M8x10	0.5 - 1 mm²	22	530
500300	3.0	-40 to 85	25	57	M8x10	0.5 - 1 mm²	22	530
500301	3.5	-40 to 85	25	57	M8x10	0.5 - 1 mm²	22	530
500302	4.0	-40 to 85	25	70	M8x10	0.5 - 1 mm²	29	450
500303	4.5	-40 to 85	25	70	M8x10	0.5 - 1 mm²	29	450
500304	5.0	-40 to 85	25	70	M8x10	0.5 - 1 mm²	29	450
500305	6.0	-40 to 85	25	70	M8x10	0.5 - 1 mm²	29	450
506495	7.0	-40 to 85	30	70	M8x10	0.5 - 1 mm²	35	320
502783	8.0	-40 to 85	30	70	M8x10	0.5 - 1 mm²	35	320
504147	9.0	-40 to 85	30	70	M8x10	0.5 - 1 mm²	37	72
508667	10.0	-40 to 85	30	70	M8x10	0.5 - 1 mm²	39	320
506366	12.0	-40 to 85	30	94	M8x10	0.5 - 1 mm²	43	260
508468	15.0	-40 to 85	30	94	M8x10	0.5 - 1 mm²	43	260
508668	16.0	-40 to 85	30	94	M8x10	0.5 - 1 mm²	48	260
500315	18.0	-40 to 85	35	94	M8x10	0.5 - 1.5 mm²	55	190
500316	20.0	-40 to 85	35	94	M8x10	0.5 - 1.5 mm²	62	190
500317	25.0	-40 to 85	40	94	M8x10	0.5 - 1.5 mm²	66	80
500318	30.0	-40 to 85	40	94	M8x10	0.5 - 1.5 mm²	72	100
Aluminium casing								
500319	32.0	-40 to 85	35	135	M8x10	0.5 - 1.5 mm²	70	50
500320	35.0	-40 to 85	40	135	M8x10	0.5 - 1.5 mm²	135	36
500321	40.0	-40 to 85	40	135	M8x10	0.5 - 1.5 mm²	139	36
536406	45.0	-40 to 85	40	135	M8x10	0.5 - 1.5 mm²	139	36
500322	50.0	-40 to 85	45	135	M8x10	0.5 - 1.5 mm²	154	32
500323	55.0	-40 to 85	45	135	M8x10	0.5 - 1.5 mm²	159	32

Parallel Connected Capacitors with Leads 250 V, 50/60 Hz

Capacitors type A

Casing: plastics, white
Fastening: male nipple
with nut and washer included
Discharge resistance
Fixing centres: 20 mm
Optional: thermal cut-out,
European wide patent
On request with alternative capacities,
connection terminals, mounting options,
casing materials or with a thermal fuse
as well as versions with IDC terminal
for the automatic luminaire wiring



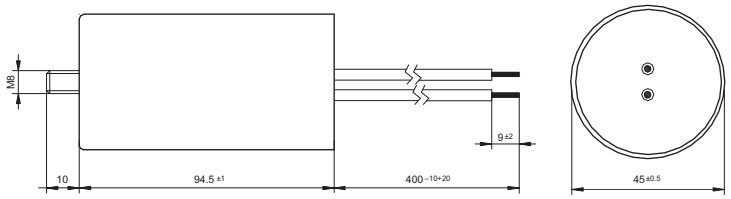

Ref. No.	Capacity µF	Temperature range °C	Ø (D) mm	Length (L) mm	Male nipple/ length (mm)	Lead length mm	Weight g	Unit pcs.
Plastic casing								
526169	4.0	-25 to 85	28	54	M8x10	250	32	350
526170	6.0	-40 to 85	25	70	M8x10	250	32	320
526171	8.0	-40 to 85	35	57	M8x10	250	35	220
529665	10.0	-40 to 85	30	70	M8x10	200	40	280
536742	12.0	-25 to 85	36	67	M8x10	150	47	120
529666	16.0	-25 to 85	36	92	M8x10	200	52	120
536741	20.0	-40 to 85	35	95	M8x10	150	63	160
508484	25.0	-25 to 85	40	70	M8x10	250	72	80
536743	30.0	-25 to 85	40	92	M8x10	150	82	80
528554	35.0	-25 to 85	45	94.5	M8x10	250	85	60
536813	40.0	-25 to 85	45	94.5	M8x10	400	85	60
528555	45.0	-25 to 85	50	94.5	M8x10	250	90	50

8 Capacitors for Fluorescent and Discharge Lamps

Idle current compensation	**517**
Parallel compensation	**518**
MPP capacitor technology	**518–520**
Assembly instructions – Capacitors	**521–522**
Capacitor tables	**523–524**
General technical details	**533–540**
Glossary	**541–543**

Compensation of idle current

When using magnetic ballasts a phase shift occurs between the mains voltage and the current drawn. This phase shift is expressed by the power factor λ, which generally ranges between a value of 0.3 and 0.7 with inductive circuits.

As a result of this phase shift, idle current, which does not boost the efficiency of the lighting unit, is also taken up from the power supply network in addition to real power. Power utility companies therefore require an increase of the power factor to values of over 0.85 for systems exceeding a certain rating (usually upwards of 250 W per external conductor).

Compensation capacitors are used to counteract idle current (by increasing the power factor) and can be connected either in parallel or in series.

Thanks to a power factor of approx. 0.95, electronic ballasts do not need to be operated with compensation capacitors.

Compensation using series capacitors

Series compensation employs a so-called dual circuit (two fluorescent lamp circuits connected in parallel), whereby the capacitor, which is connected in a branch of the circuit, over compensates the inductive idle current to such an extent that it covers the idle current of both ballasts. This type of circuit is only used with fluorescent lamps. As series capacitors are dimensioned for nominal-voltage and ballast tolerances, the lamp in the capacitor branch of the dual circuit operates with a higher current and thus also with a higher rating. Apart from differences in lamp brightness, the power loss in the circuit branch with the capacitor will also be greater.

An advantage of the dual circuit is that it prevents the radiated light from flickering.

The higher current in the so-called capacitive lamp circuit causes an up to 14% increase in lamp rating and a reduction of the lamp service life by as much as 20%. This goes hand in hand with substantial technical, ecological and economic disadvantages.

Series capacitors have to meet very high technical requirements to suit various aspects like temperature, nominal voltage, tolerances of the capacitance values, etc.

As defined by EC directive 2000/55/EC (European Standard EN 50294 governing the measurement of total power consumption), a series capacitor is considered to be a part of the ballast. If the system rating of the capacitive circuit containing the lamps and ballasts is then determined in line with the above definition, rating increases of up to 14% will become apparent in comparison to operation without a series capacitor. Experience has shown that this increased power consumption often means devices fall in the directive's "banned" category. It is therefore strongly advised that due consideration be given to the elevated power consumption values common to using series capacitors for compensation purposes.

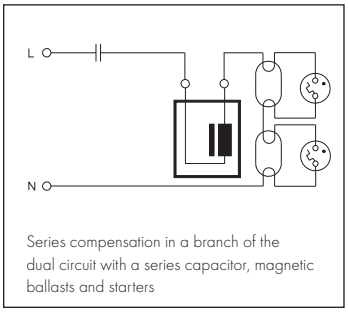

Series compensation in a branch of the dual circuit with a series capacitor, magnetic ballasts and starters

Parallel compensation

During parallel compensation, each lamp circuit is assigned to a capacitor connected in parallel to the mains. Only one capacitor providing sufficient capacitance is needed for luminaires with several lamps. Parallel compensation does not affect current flow through a discharge lamp. The requirements placed on parallel capacitors are clearly lower than those for series capacitors.

However, parallel compensation can be subject to limitations when using audio-frequency ripple control pulses if the system operates with a connected rating of over 5 kVA and ripple control frequencies of over 300 Hz are used. The respective power utility company should be consulted for advice in such cases.

Parallel compensation is used in fluorescent lamp and high-pressure discharge lamp circuits.

As parallel compensation offers substantial advantages, this has become the accepted method in the last few years.

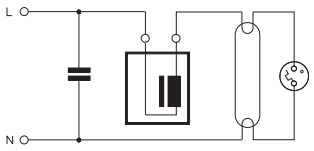

Parallel compensation of a fluorescent lamp circuit

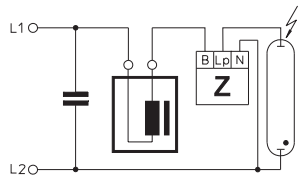

Parallel compensation of a high-pressure discharge lamp circuit with a superimposed ignitor

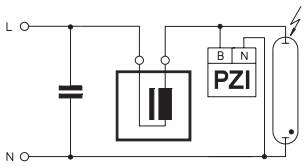

Parallel compensation of a high-pressure discharge lamp circuit with a pulse ignitor

Metallised polypropylene film capacitors

Metallised polypropylene film capacitors are designed to compensate the inductive idle current drawn by discharge lamps (fluorescent lamps, high-pressure mercury vapour lamps, high-pressure sodium vapour lamps and metal halide lamps with a ceramic discharge tube) in 50 Hz/60 Hz grids. All Vossloh-Schwabe compensation capacitors for luminaires feature a metallised polypropylene film dielectric. Compensation capacitors help to increase the power factor to values of over λ 0.85 as required by power utility companies.

Construction of metallised polypropylene film capacitors

VS MPP capacitors contain a low-loss metallised polypropylene film dielectric, which is produced by depositing a thin layer of zinc and aluminium or pure aluminium vapour onto one side of the polypropylene film. The contacts at either end of the capacitor coil are created by spraying on a layer of metal and thus guarantee a high current-carrying capacity as well as a low-inductive connection between the terminals and the coils.

All capacitors with a nominal voltage upwards of 280 V are filled with oil or resin after the coils have been inserted and then hermetically sealed. This protects the coils from environmental influences and reduces partial discharge, which contributes to a long service life and stable capacitance. The effects of partial discharge only play a minor role for capacitors with a nominal voltage of under 280 V so that these devices do not need to be filled.

Hermetically sealed, filled capacitors with an overpressure contact breaker should always be used in critical ambient conditions (high humidity, aggressive atmospheres, high temperatures), if the workload and power supply conditions are unknown as well as in situations that demand increased attention to safety.

VS MPP capacitors feature a self-healing dielectric. In the event of a dielectric breakdown in the coil (short circuit), the metal coating vaporises around the breakdown site owing to the high temperature of the transient arc that is produced. Owing to the excess pressure generated during such a breakdown, the metal vapour is pushed outwards away from the centre of the site within the space of just a few microseconds. This creates a coating-free corona around the breakdown site that completely isolates it and means the capacitor remains fully functional during a dielectric breakdown.

The self-healing properties of a capacitor can decrease with time and with constant overloading. This bears the risk of a non-healing breakdown with a permanent short circuit. Therefore self-healing must not be confused with failsafe.

Compensation capacitors are divided into two type families (A and B) in accordance with IEC 61048 A2.

- Type A capacitors defined:
  "Self-healing parallel capacitors; without an (overpressure) contact breaker in the event of failure".
  They are referred to as unsecured capacitors.

- Type B capacitors defined:
  "Self-healing capacitors for series connection in lighting circuits or self-healing parallel capacitors; with an (overpressure) contact breaker in the event of failure".
  These are referred to as hermetically sealed, secured capacitors.

In accordance with the standard, the discharge resistor of both capacitor families must be capable of reducing capacitor voltage to a value of under 50 V in the space of 60 seconds after disconnection from the mains.

Capacitors without a contact breaker, unsecured,
Type A capacitors in accordance with IEC 61048 A2

IEC 61048 A2-compliant Type A capacitors are self-healing and require no short-circuit protection for normal operation.

Type A capacitors are not fitted with a specific failsafe mechanism as prescribed by the standards for Type B capacitors. Nevertheless, the requirements laid down in the standard for Type A capacitors, especially with regard to temperature and service life tests, are designed to ensure a sufficient degree of device safety and availability **provided the device was correctly installed and operated under calculable and known ambient operating conditions**.

Even so, in very rare cases these capacitors can still develop erratic behaviour due to overloading or at the end of the device's service life.

For that reason, Type A capacitors should only be integrated into luminaires for operation in ambient conditions that are uncritical with regard to flammable materials. Luminaires should feature protection against secondary damage inside and outside the luminaire in the event of a defect.

Temperature-protected capacitors are a further development of Type A capacitors and are fitted with a thermal fuse that is triggered by overheating as a result of electrical or thermal overloading. They are tested in accordance with IEC 61048 A2 and comply with Type A requirements. Excess temperatures cause the two wire ends of the element inside the fuse to melt into bead shapes that are fully isolated from each other by special insulation.

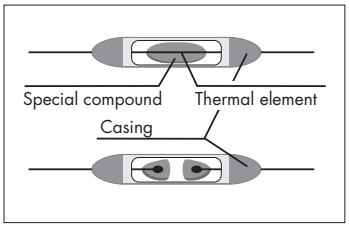

In 99% of all the rare cases of critical capacitor failure, this failure is preceded by a gradual increase in the loss factor, which leads to an increase in the winding temperature and thus triggers the thermal fuse.

Vossloh-Schwabe recommends that preference be given to Type A capacitors with a thermal fuse as a matter of course for reasons of safety.

Type A capacitors predominantly feature a plastic casing.

Capacitors with a contact breaker,
secured Type B capacitors in accordance with IEC 61048 A2

Self-healing capacitors do not require short-circuit protection for normal operation as they automatically regenerate after a dielectric breakdown. However, as a result of frequent self-healing caused by overloading (voltage, current, temperature) or towards the end of the capacitor's service life, overpressure can build up inside the capacitor (due to the decomposition products of the vaporised polypropylene).

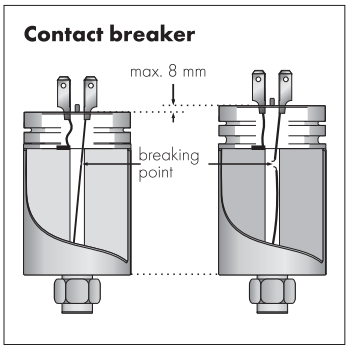

In order to prevent the capacitor casing from exploding in such cases, hermetically sealed capacitors in accordance with IEC 61048 A2 (Type B capacitors) are fitted with an overpressure contact breaker. If excess pressure builds up within these capacitors, e.g. due to undue thermal loading or excessive voltages or at the end of the capacitor's service life, a concertina section opens out that causes the casing to expand lengthways. As a result, the wire contacts rupture at a predetermined breaking point, which irreversibly interrupts the current (contact breaker).

This type of overpressure-protected capacitor with a contact breaker is also referred to as a flame- and explosion-proof capacitor with a break-action mechanism.

Type B capacitors with a contact breaker are available in an aluminium casing.

Assembly Instructions for Capacitors

For mounting and installing compensation capacitors

Mandatory regulations

DIN VDE 0100	Erection of low voltage installations
EN 60598	Luminaires – part 1: General requirements and tests
EN 55015	Maximum values and testing methods for radio disturbance of electrical lighting facilities and similar electrical equipment
EN 61000-3-2	Electromagnetic Compatibility (EMC) – part 3: maximum values – main section part 2: maximum values for mains harmonics (ballast input current up to and including 16 A per conductor)
EN 61048	Operating devices for lamps – capacitors for fluorescent lamp circuits and other discharge lamp circuits; general and safety requirements
EN 61049	Operating devices for lamps – capacitors for fluorescent lamp circuits and other discharge lamp circuits; performance requirements

Mechanical mounting

Fastening

Base screw (permissible torque):
- M8x10 – 5 Nm (aluminium casing)
- M8x10 – 2.2 Nm (plastic casing)

Mounting location

Any
Capacitors fitted with overpressure protection require clearance of at least 10 mm above the contacts so ensure the casing can expand unhindered if the contact breaker is triggered.

Heat transfer

Capacitors should be mounted with the greatest possible clearance to heat sources or lamps. During operation, the temperature measured at the t_c point must not exceed the specified maximum value.

t_c point

The t_c point is defined as an arbitrary point on the surface of the capacitor, which is not specifically marked.

UV Radiation

Capacitors should not be installed in an unprotected manner directly next to any sources of light, heat radiation or convection (ballasts, lamps, heating elements, etc.) as both high temperatures and constant exposure to UV radiation can lead to premature ageing. In combination with high temperatures, UV radiation or other substances and influencing factors, chemicals such as ozone and chlorine can lead to accelerated ageing and material embrittlement.

Thermal load

All capacitor casings are made of flame-retardant materials. However, the potting material, oils and the winding material are flammable and consideration must be taken of this fact during installation. The thermal load of an MKP capacitor is approx. 40 MJ/kg.

Safety functions

Type A capacitors are not fitted with any special protective functions in case of defect.
Temperature-protected capacitors are a further development of Type A capacitors and feature a thermal fuse that is triggered by excess temperatures and disconnects the capacitor from the mains.

Type B capacitors are fitted with an overpressure contact breaker in case of defects at the end of the capacitor's service life.

Connection

Parallel capacitors for fluorescent lamps:
- Casing diameter 25–30 mm: push-in terminals for 0.5–1 mm² conductors and IDC terminals for H05V-U 0.5 conductors
- Casing diameter > 30 mm: push-in terminals for 0.5–1 mm² conductors

Parallel capacitors for high-pressure lamps:
- Casing diameter 25–30 mm: push-in terminals for 0.5–1 mm² conductors and IDC terminals for H05V-U 0.5 conductors
- Casing diameter > 30 mm: push-in terminals for 0.5–1.5 mm² conductors

Reliability and service life

Provided the max. specified voltage and current loads, temperature, humidity and mains harmonics values are observed,
- approx. 50,000 hours for overpressure-protected parallel capacitors
- approx. 30,000 hours for parallel capacitors without overpressure protection in a plastic or aluminium casing

A 3–10% decrease in capacitance must be expected in the course of the capacitor's service life.
Failure rate: 1‰ per 1,000 operating hours when maximum voltage, current and temperature values are not exceeded.

Electrical installation

Nominal voltage: 250 V, 50/60 Hz; 280 V, 50/60 Hz; 450 V, 50/60 Hz (dependent on type)

Capacitance tolerance: ±10% (±5% dependent on type)

Temperature range: –25/–40 °C to +85/+100 °C (dependent on type, details see product page)

Optional thermal fuse

Relative humidity: Class F for Type B capacitors: 75% annual mean, 95% peak value on 30 days
Class G for Type A capacitors: 65% annual mean, 85% peak value on 30 days

Condensation: Impermissible

Capacitors for fluorescent lamp circuits

Lamp		Parallel compensation capacitor (µF ±10% at 250 V)		Series compensation capacitor (µF ±4%)		
Output W	Type	220–240 V/50 Hz µF	220–230 V/60 Hz µF	220 V/50 Hz µF	230 V/50 Hz µF	220 V/60 Hz µF
4	T	2**	2**	–	–	–
6	T	2**	2**	–	–	–
8	T	2**	2**	–	–	–
10	T	2	2	–	–	–
13	T	2	2	–	–	–
14	T	4.5	4.5	–	–	–
15	T	3.5 or 4*	3 or 4*	–	–	–
16	T	2	2	–	–	–
18	T	4.5 or 4*	4**	2.9/440 V	2.8/480 V	2.4/440 V
20	T	4.5 or 4*	4**	2.9/440 V	2.8/480 V	2.4/440 V
23	T	3.5	3	–	–	–
25	T	3.5	3	–	2.3/450 V	–
30	T	4.5	4	3/420 V	2.9/450 V	–
36	T	4.5	4	3.6/420 V	3.4/450 V	3/420 V
36-1m	T	6.5	–	–	–	–
38	T	4.5	4	–	–	–
40	T	4.5	4	3.6/420 V	3.4/450 V	3/420 V
42	T	6.5	–	–	–	–
58	T	7	6	5.7/450 V	5.3/450 V	4.8/420 V
65	T	7	6	5.7/450 V	5.3/450 V	4.8/420 V
70	T	6	–	–	–	–
75	T	6	–	–	–	–
80	T	9	8	–	7.2/420 V	–
85	T	8	6.5	–	8.4/420 V	–
100	T	10	9	–	–	–
115	T	18	16	–	–	–
140	T	14	14	–	–	–
160	T	14	14	–	–	–
16	T-U	2	2	–	–	–
18/20	T-U	4.5 or 4*	4**	2.9/440 V	2.8/480 V	2.4/440 V
36/40	T-U	4.5	4	3.6/420 V	3.4/450 V	3/420 V
58/65	T-U	7	6	–	–	–
22	T-R	5	4.5	–	3.2/440 V	–
32	T-R	5	4.5	–	3.4/450 V	–
40	T-R	4.5	4	3.6/420 V	3.4/450 V	3/420 V
5/7/9/11	TC-S	2**	2**	–	–	–
10	TC-D/TC-T	2	2	–	–	–
13	TC-D/TC-T	2	2	–	–	–
18	TC-D/TC-T	2	2	–	–	–
26	TC-D/TC-T	3.5	3	–	–	–
10	TC-DD	2	2	–	–	–
16	TC-DD	2	2	–	–	–
21	TC-DD	3	3	–	–	–
28	TC-DD	3.5	3	–	–	–
38	TC-DD	4.5	4	–	–	–
18	TC-L/TC-F	4.5 or 4*	4**	–	–	–
24	TC-L/TC-F	4.5	4	–	–	–
34	TC-L/TC-F	4.5	4	–	–	–
36	TC-L/TC-F	4.5	4	–	–	–

*) Two lamps connected to a ballast in series **) Applies to one lamp connected to a ballast or two lamps connected in series

Capacitors for

Lamp		Compensation capacitor (µF ±10%)			
Output W	Type	220/230/240/252 V 50 Hz (µF)	220 V 60 Hz (µF)	380/400/420 V, 50 Hz (µF)	380 V/60 Hz 60 Hz (µF)
high-pressure mercury vapour lamp circuits					
50	HM	7	6		
80	HM	8	7		
125	HM	10	10		
250	HM	18	15		
400	HM	25	25		
700	HM	40	35		
1000	HM	60	50		
high-pressure sodium vapour lamp circuits					
35	HS	6	5		
50	HS	8	8		
70	HS	12	10		
100	HS	12	10		
150	HS	20	16		
250	HS	32	25		
400	HS	45	40		
600	HS	65	55	25	20
750	HS	70	60	25	25
1000	HS	100	85		
metal halide lamp circuits					
35	HI	6	5		
70	HI	12	10		
100	HI	12	10		
150	HI	20	16		
250	HI	32	25		
400	HI	35/45	35/45		
1000	HI	85	75		
2000	HI	125	125		
2000	HI			37	37
2000	HI			60	60
2000	HI			60	60
2000	HI			100	100

Capacitors for low-pressure discharge lamp circuits

Lamp		Compensation capacitor (µF ±10%)
Output W	Type	230 V/50 Hz µF
35	LS	20
55	LS	20
90	LS	26
135	LS	40
180	LS	40

LIGHTING TECHNOLOGY COMPONENTS FOR THE UL MARKET





At the beginning of 2010, the US American sales office, Vossloh-Schwabe Inc., was merged with Universal Lighting Technologies, Inc., a further Panasonic subsidiary.

This merger has enabled Universal Lighting Technologies – as the USA's second-largest manufacturer of ballasts – to expand its product range with electronic ballasts for discharge lamps, a very extensive line of lamp-holders for all common lamp types as well as an outstanding suite of LED modules.

The entire range of ULT and VS products for the NAFTA market can be found at www.unvlt.com. Your usual contact partners will naturally continue to be available.

The merger of these two Panasonic subsidiaries has given rise to major synergies with regard to innovation and market presence.

The extensive range of electronic ballasts for the UL market goes from standard products right up to dimmable ballasts for all common fluorescent lamps. Micro, Mini, Square and Standard electronic ballasts are also available for 20 W to 150 W high-pressure discharge lamps.

Available in numerous models that permit a wide variety of installation options, these low-loss products are characterised by a high degree of reliability and low internal losses.

VS lampholders for the UL market are available for all common lamp types. The following pages serve to give you some idea of the highly extensive product range.

Further information can be found at **www.unvlt.com**.





The Universal® and Triad® brands stand for continuously improved technologies and innovations that can reduce energy costs by up to 40%.

Universal® products are characterised by advanced design in the fields of linear electromagnetic ballasts for fluorescent lamps, discharge lamps and advertising technology.

Triad® provides a complete range of products to dim compact fluorescent lamps and linear electronic ballasts for fluorescent lamps.

Universal Lighting Technologies

Nashville, TN 372215
Phone: 615-316-5100
www.unvlt.com



Energy Management & Controllable Lighting



Linear Fluorescent Ballasts



Electronic & Magnetic HID Ballasts

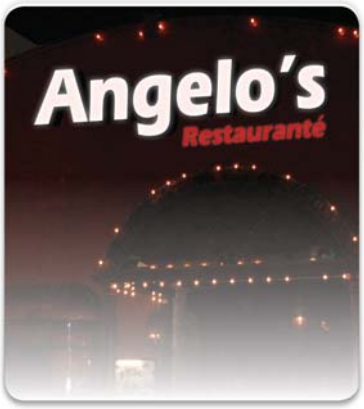

Sign Ballasts



Compact Fluorescent Ballasts

E39 Porcelain Lampholders

For discharge lamps with base E39 / Mogul base

Screw terminals: max. 16–12 AWG, solid conductor

E39 lampholders
Casing: porcelain, white
Nominal rating: 2000 W/600 V/6 kV pulse rating
Cylindric shape
Screw shell: brass, nickel-plated
Central contact: brass, nickel-plated
Spring loaded central contact
Screw terminals: 18–14 AWG
Fixing distance: 35 mm (1.378")
Thread measured in inches No. 8-32 UNC (ISO)
Weight: 190 g, unit: 50 pcs.
Type: 12870/12876
Ref. No.: 109014
Ref. No.: 109518 with lamp safety catch

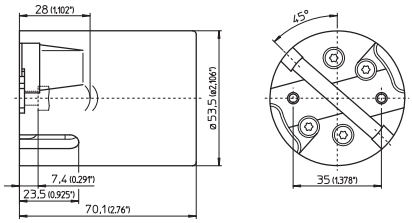



PGJ5 Lampholders

For single-ended discharge lamps

Additional lead lengths and types on request

PGJ5 lampholder
Casing: ceramic, cover plate: LCP
Nominal rating: 2 A/250 V/2.5 kV pulse rating
Leads: Cu nickel-plated, stranded conductors
18 AWG, PTFE-insulation, transparent,
length: 305 mm (12")
Fixing holes for screws M3 (#4)
Weight: 10.8 g, unit: 100 pcs.
Type: 34155
Ref. No.: 538629 lateral lead exit

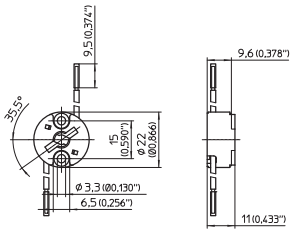



GU6.5 Lampholders

For single-ended discharge lamps

Additional lead lengths and types on request

GU6.5 lampholders
Casing: ceramic, cover plate: PPS
Nominal rating: 2 A/250 V/5 kV pulse rating
Leads: Cu nickel-plated, stranded conductors 18 AWG, PTFE-insulation, length: 305 mm (12")
Weight: 20 g, unit: 100 pcs.
Type: 34515 fixing holes for screws M3 (#4)
Ref. No.: 534218
Type: 34516 threaded bushes for screws M3 (#4)
Ref. No.: 534219

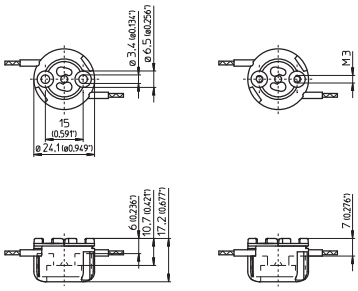



GU6.5 lampholders
Casing: ceramic, cover plate: PPS
Nominal rating: 2 A/250 V/5 kV pulse rating
Leads: Cu nickel-plated, stranded conductors 18 AWG, PTFE-insulation, length: 305 mm (12")
Weight: 20 g, unit: 100 pcs.
Type: 34525 dia. 22 mm
new **Ref. No.: 535783**

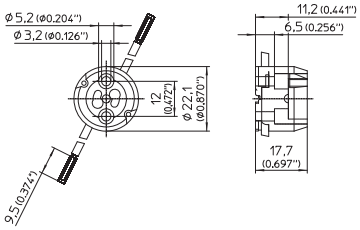



GX10 Lampholders

For single-ended discharge lamps

GX10 lampholder
Casing: steatite, cover plate: PPS
Nominal rating: 2/500/5 kV
Leads: Cu nickel-plated, stranded conductors 18AWG, PTFE insulation, length: 305 mm (12")
Weight: 25 g, unit: 100 pcs.
Type: 31550
Ref. No.: 543153

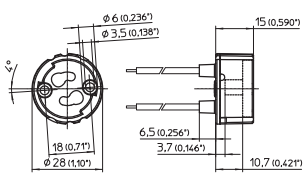



new

G12 Lampholders

For single-ended discharge lamps

Additional lead lengths and types on request

G12 lampholders
Casing: ceramic, cover plate: PPS, black
Nominal rating: 660 W/600 V/5 kV pulse rating
Contacts: Ni
Leads: 18 AWG, SF-2
Fixing holes for screws M4 (#8)
Weight: 56/144 g, unit: 25 pcs.
Type: 31936
Ref. No.: 108257 lead length: 460 mm (18")
Ref. No.: 526211 lead length: 1525 mm (60")

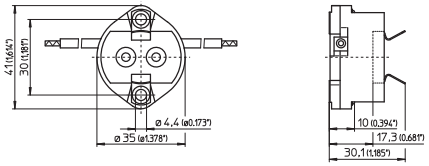



Slide-on Lampholders for Lamps T8, T12

Twist and lock lampholders for fluorescent lamps T8 and T12 / Medium Bi-Pin

Nominal rating: 660 W/600 V
All products in this chapter carry a T rating
of T140 acc. to IEC standards

Slide-on lampholders for lamps T8 and T12
Lamp axis: 23 mm (0.906")
Push-in twin terminals: 18 AWG, solid conductor
or stranded conductor, tinned
Slide slots for wall thickness
0.5–0.8 mm (0.020–0.031")
Weight: 7 g, unit: 1000 pcs.
Type: 29150/29155
new **Ref. No.: 545858**
new **Ref. No.: 545852** internally shunted

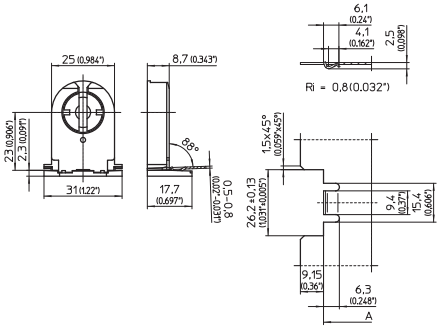



G13 Push-through Lampholders for T8, T12 Lamps

Lampholders for fluorescent lamps T8 and T12 / Medium Bi-Pin

Nominal rating: 660 W/600 V
Push-in twin terminals: 18 AWG, solid or stranded conductors, tinned
Lateral fixing clips for wall thickness 0.4–2 mm (0.016"–0.079")

All products in this chapter carry a T rating of T140 acc. to IEC standards

G13 push-through lampholders for lamps T8, T12
Pin support for reliable contact
Lamp axis: 16 mm (0.630")
Weight: 4.7/4.5 g, unit: 1000 pcs.
Type: 29300 with stop
Ref. No.: 509134
Type: 29301 without stop
Ref. No.: 509135

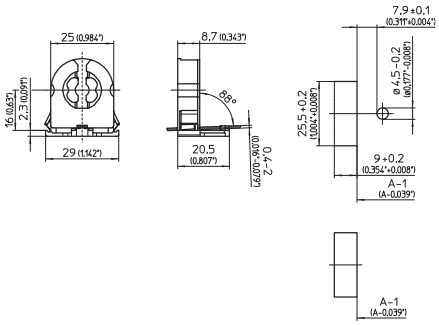



G13 push-through lampholders for lamps T8, T12
Pin support for reliable contact
Lamp axis: 23 mm (0.906")
Weight: 6.6 g, unit: 1000 pcs.
Type: 29100/29125 with stop
new **Ref. No.: 545845**
new **Ref. No.: 545840** internally shunted
Type: 29101/29126 without stop
new **Ref. No.: 545849**
new **Ref. No.: 545842** internally shunted

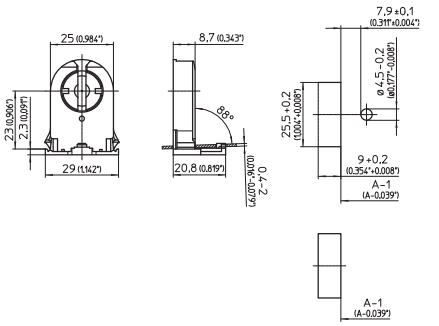



G13 push-through lampholders for lamps T8, T12
Pin support for reliable contact
Lamp axis: 31 mm (1.220")
Weight: 7.8 g, unit: 1000 pcs.
Type: 28700/28725 with stop
Ref. No.: 109342
Ref. No.: 109376 internally shunted
Type: 28701/28726 without stop
Ref. No.: 109343
Ref. No.: 109377 internally shunted

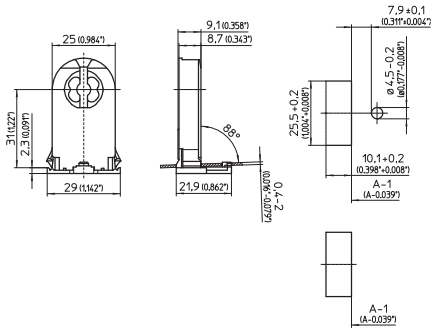



G5 Lampholders

Lampholders for fluorescent lamps with base G5

G5 push-through lampholders
Lamp axis: 20 mm (0.787")
Casing: PBT GF, white, rotor: PBT GF, white
T140, nominal rating: 2/500
Push-in twin terminals: 0,5–1 mm² (18 AWG)
Lateral fixing clips for wall thickness 0.5–1.5 mm (0.020"–0.059")
Weight: 4.1 g, unit: 1000 pcs.
Type: 09432/09433

new **Ref. No.: 545933** with stop
new **Ref. No.: 545935** without stop

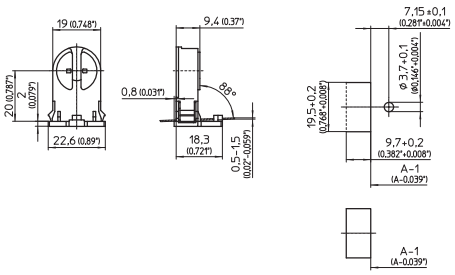



G5 push-through lampholders
Lamp axis: 25 mm (0.984")
Casing: PBT GF, white, rotor: PBT GF, white
T140, nominal rating: 2/500
Push-in twin terminals: 0.5–1 mm² (18 AWG)
Lateral fixing clips for wall thickness 0.5–1.5 mm (0.020"–0.059")
Weight: 4.5 g, unit: 1000 pcs.
Type: 09434/09435

new **Ref. No.: 545937** with stop
new **Ref. No.: 545939** without stop

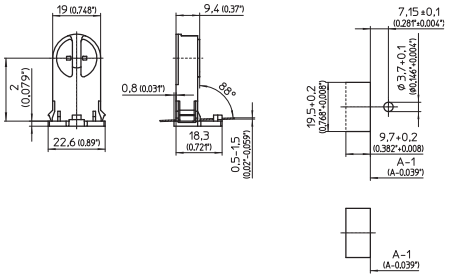



G5 push-through lampholders
Lamp axis: 15 mm (0.591")
Casing: PBT GF, white, rotor: PBT GF, white
T140, nominal rating: 2/500
Push-in twin terminals: 0.5–1 mm² (18 AWG)
Lateral fixing clips for wall thickness 0.5–1.5 mm (0.020"–0.059")
Weight: 3.5/3.4 g, unit: 1000 pcs.
Type: 09420/09421

Ref. No.: 505737 with stop
Ref. No.: 505739 without stop

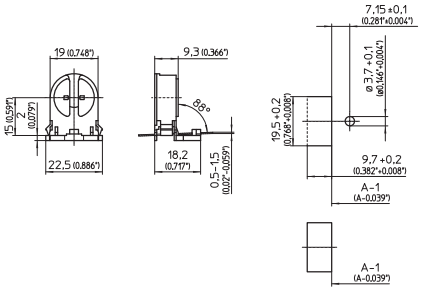



10 General Technical Details

General technical details **533–540**
Product development and product certification 534–535
CE mark 535–536
Climate and environmental protection 537
Protection classes of luminaires and operating devices 538
Operating devices with double or reinforced insulation for installation in protection class II luminaires 538
Protection classes of luminaires and operating devices 539
Selection of components, materials and dimensions 539
Impulse voltage categories for lampholders 540
Torque to be applied to screws 540

Glossary **541–543**

Product development and product certification

The increasingly converging world and the global markets that are being created are both placing new design demands on the sector and its technologies. Against this background, standardisation – both on a regional and international scale – is becoming more and more important in positioning new technologies and innovations on the market. Standardisation ensures the necessary degree of safety, reliability, exchangeability and cost-effectiveness.

Vossloh-Schwabe products have been developed and produced on the basis of technical innovations, internationally and regionally applicable standards and valid environmental regulations for more than 90 years. In this respect, we already take account of integrated components and materials, production methods and technologies, comprehensive environmental aspects as well as a product's energy efficiency during the development phase. An important entrepreneurial goal in all these years has been and continues to be to create lighting components that satisfy the requirements of our customers with regard to safety, function, longevity and cost-effectiveness.

In addition to observing valid, state-of-the-art standards, we also take consideration of the recommendations of industrial associations when developing new products.

In addition to undergoing internal production approval tests, mass-produced devices are also submitted to national and international testing institutes for certification. The applicable testing and assessment regulations of the testing institutes are subject to international variation. The marks of conformity shown here are therefore not valid for all the products featured in the catalogue. You will find an overview of the approval marks for the products presented in the catalogue from page 544 on. On request, we will gladly provide information about all of the existing approvals. You can also find test certificates in our online catalogue at **www.vossloh-schwabe.com**.

As the international IEC (International Electrotechnical Commission) standards for lighting technology are also adopted by the European Institute for Standardisation CENELEC (Comité Européen de Normalisation Electrotechnique), the European standards (EN) therefore contain the same requirements. In rare cases, national deviations are permitted. The certification (third-party testing) of VS catalogue products in accordance with EN standards is documented by the ENEC mark.

The ENEC mark (European Norms of Electrical Certification) was created in Europe as a uniform certification mark for electrotechnical products. The ENEC Agreement currently governs the following product groups:

- luminaires
- luminaire components
- energy-saving lamps
- IT equipment
- connection terminals, clips
- capacitors
- couplers
- switches for household appliances
- noise filters
- safety transformers
- tools
- consumer electronic
- batteries
- domestic appliance mobile tools
- IT products

There are plans to include further electrical equipment in the ENEC Agreement.

The certification of products is also expanded to include non-European manufacturers. However, certification testing for lighting equipment must be carried out by an ENEC testing institute in Europe.

At present, a total of 27 testing houses in 22 countries are signatories of the ENEC agreement (see table). Obtaining an ENEC mark for luminaire components like ballasts and ignitors also includes having the product assessed in accordance with the standards governing safety and function. Certification must be based on the EN standards listed in the Agreement.The mark documents that the product not only complies with the applicable standards, but also that ongoing production is monitored by inspectors from a testing institute and that the manufacturer operates an effective quality assurance system in accordance with the ISO 9000 standard suite (International Standards Organisation). ISO deals with the standardisation of non-electrotechnical products.

The ENEC mark is displayed with the identification number and often the logo of the testing institute, as follows:

Identification No.	Testing Institute	Identification No.	Testing Institute
01	AENOR – Spain	16	SGS Fimko – Finland
02	SGS – Belgium	17	NEMKO – Norway
03	IMQ – Italy	18	TRI MEEI – Hungary
04	CERTIF – Portugal	19	ITCL – United Kingdom
05	DEKRA – Netherlands	20	ASTA – United Kingdom
06	NSAI – Ireland	21	EZÚ – Czech Republic
07	SNCH – Luxembourg	22	SIQ – Slovenia
08	LCIE – France	23	TSE – Turkey
09	ELOT – Greece	24	TRLPTÜV – Germany
10	VDE – Germany	25	TÜV SÜD PS – Germany
11	ÖVE – Austria	26	not currently issued
12	BSI – United Kingdom	27	not currently issued
13	Electrosuisse – Switzerland	28	SEP – BBJ – Poland
14	Intertek SEMKO – Sweden	29	not currently issued
15	UL Int'l DEMKO – Denmark	30	PREDOM – OBR – Poland

Apart from a product's safety and performance certification, a further useful selection aid is to have a product's electromagnetic compatibility (EMC) tested by an independent test institute, particularly in the case of electronic ballasts. If the product passes the EMC test, an additional test mark is awarded, for instance the VDE EMC mark of the VDE test and certification institute in Offenbach. The EMC certifications for control gears are helpful for the EMC luminaire certification and could reduce time and cost for the luminaire certification.

CE mark

EC Directives form the basis for a common European domestic market without any trade restrictions. Any products that are destined for the European market have to meet the requirements of all directives that apply to the product in question. Compliance with the directives is documented by the CE mark on the product or in the technical documents.

CE

This CE mark is therefore not a mark of compliance with standards (test certificate) of a testing institute, like the ENEC mark is, and can therefore not be issued by a testing institute. The CE mark must be printed on the product, the packaging or both and is not directed at the consumer, but at supervisory authorities.

The following table contains a list of key EC Directives governing lighting:

347/2010	Change of commission regulation No. 245/2009
859/2009	Change of commission regulation No. 244/2009
2009/125/EG	Setting of ecodesign requirements for energy-related products (ErP). This directive supersedes directive 2005/32/EC. The new directive was extended and now includes all energy-consuming products. Regulations 244 and 245 remain unaffected by this change.
245/2009/EG	Definition of eco-design requirements regarding fluorescent lamps without an integrated ballast, high-pressure discharge lamps as well as ballasts and luminaires in their operation and the invalidation of Directive 2000/55/EC of the European Parliament and Council.
244/2009/EG	Definition of eco-design requirements regarding household lamps with non-directional light.
1907/2006	Specifications governing the registration, evaluation, authorisation and description of chemicals: REACH (**R**egistration, **E**valuation, **A**uthorisation and Restriction of **Ch**emical Substances)
2006/95/EG	Electrical equipment designed for use within certain voltage limits (Low Voltage Directive).
2006/32/EG	Energy end-use efficiency and energy services – ES Directive (Energy Service); national laws must take effect by 17.05.2008.
2006/25/EG	Directive on the minimum health and safety requirements regarding the exposure of workers arising from physical agents (artificial optical radiation)
2005/32/EG	Eco-design requirements for energy-using products – EuP directive (Energy using Products).
2005/20/EG	Directive regarding packaging
2004/108/EG	Directive on the approximation of the laws of the Member States relating to electromagnetic compatibility; national laws had to take effect by 20.01.2007. Applicable to new products since 20.07.2007.
2004/40/EG	Directive on the minimum health and safety requirements regarding the exposure to the risks arising from physical agents (electromagnetic fields)
2004/12/EG	Directive on packaging
2003/66/EG	Directive on energy labelling of household electrical refrigerators, freezers and lamps
2002/96/EG	Old electrical and electronic devices; effective since 13.08.2005; does not fall under the CE mark directive
2002/91/EG	Total energy efficiency of buildings; effective since 04.01.2006; does not fall under the CE mark directive
2001/95/EG	Directive on general product safety
1998/11/EG	Energy rating of household lamps; effective since 14.06.1999
1994/62/EG	Directive on packaging
93/68/EWG	CE marking directive
89/336/EWG	Directive on the approximation of the laws of the Member States relating to electromagnetic compatibility; effective since 30.06.1991; still applicable to old products (i.e. manufactured prior to the date of the directive) up to 20.07.2009.

Manufacturers are obliged to keep conformity declarations as well as test and production documentation ready for presentation.

The documents must be retained for a period of 10 years after the product was last marketed.

Vossloh-Schwabe operating devices all bear the CE mark; the respective conformity declaration and production documentation are available for inspection. As a consequence, all luminaires that are equipped with properly installed VS components and for which the assembly instructions were observed meet the legal requirements.

Climate and environmental protection

The European Union adopted a number of EU Directives that are designed to reduce the CO_2 output. Essentially, these objectives can be grouped into three categories:

- requirements placed on new products,
- requirements placed on buildings and
- revision of existing installations.

The requirements placed on new products are governed by the **ErP framework directive** (**E**nergy-**r**elated **P**roducts) together with the so-called implementation directive, which envisage the setting of special energy requirements for lamps (minimum lm/W requirements), operating devices (minimum efficiency ratings) and luminaires (minimum energy efficiency requirements) for all lighting technologies. The directive on energy efficiency requirements regarding ballasts for fluorescent lamps is integrated into the implementation directive.

The requirements for buildings (**EPBD: E**nergy **P**erformance of **B**uil**d**ings) are specify targets for the maximum permissible primary output of lighting. In so doing, a calculation method is employed that will stipulate the permissible maximum electrical output values of the lighting system using a reference procedure.

With regard to the revision of existing installations the EU member states are called upon to set up national action plans (**Energy Service Directive**) that show which measures can be used to achieve the targeted CO_2 reductions.

In addition to the climate protection requirements, a number of directives were also produced to cover waste reduction and recycling, specifically the **WEEE** (**W**aste of **E**lectrical and **E**lectronic **E**quipment) and **RoHS** (**R**estriction of the use of certain **H**azardous **S**ubstances) directives. These directives regulate the disposal and reduction of waste and the use of hazardous substances.

As a result of the REACH system (**R**egistration, **E**valuation, **A**uthorisation and Restriction of **Ch**emical Substances) only registered chemical substances can now be brought onto the market. The principle is: no data, no market.

As operating devices and lampholders are constituent parts of luminaires, these components are to be disposed of along with the luminaire; separate disposal is not provided for.

Protection classes of luminaires and operating devices

The electric shock protection that luminaires and control gears are fitted with provides dual protection, which prevents any danger in the event of a technical defect.

Luminaires and operating devices of **protection class I** provide protection against electrical shock solely using the base insulation and the safe connection of all exposed conductive parts to an earth conductor. Thus, should the base insulation fail, no exposed conductive parts can become live.

Luminaires and operating devices of **protection class II** provide protection against electrical shock using both the base insulation and an additional or reinforced insulation. Protection class II products do not feature a connection to a protective earth conductor. The mounting conditions do not ensure any additional degree of protection, either.

In special cases with Protection Class II luminaires, it can be permissible to connect a protective conductor or a function protection conductor, as follows:

- **for EMC reasons** – in such cases, it can be necessary to connect a function protection conductor to remain within EMC limiting values. The component manufacturer's specifications regarding the individual operating devices must be observed during the construction of the luminaire. If an operating device is marked as containing a function protection conductor, the creepage and air clearance distances of the operating device connection must comply with the requirements of protection class II (reinforced or additional insulation);
- **as an ignition aid for lamps** – connecting a function protection conductor can be necessary as a capacitive ignition aid for lamps. In such cases the creepage and air clearance distances around the ignition aid within the luminaire and the function protection conductor connection terminal have to comply with the requirements of protection class II (reinforced or additional insulation). The ignition behaviour of a lamp should be agreed with the manufacturer in these cases;
- **when wiring the protective conductor** from the luminaire to another device. This is an installation point of the protective conductor and creepage and air clearances must comply with the respective requirements laid down in the luminaire standard as well as any requirements regarding reinforced or additional insulation.



Connection terminal
for the protective
earth conductor
Protection class I



Connection of the function
protection conductor
(will drop in future)



General symbol for
an earth connection



Protection class II

Operating devices with double or reinforced insulation for installation in protection class II luminaires

Protection class II specifications have to be met by the luminaire along with its installed operating device. Both protection class I and class II ballasts can be installed. The design of the luminaire must be adapted to suit. This means that if a protection class I ballast is installed in a protection class II luminaire, the design of the luminaire has to be correspondingly sophisticated to ensure the creepage and air clearance distances can be met. On the other hand, using a protection class II ballast, only available as an independent ballast nowadays, will in most cases result in a need for too much technical effort and thus in high costs. Against this background, the standards contain special requirements for ballasts destined for installation in protection class II luminaires.

These "**double or reinforced insulation ballasts**" and respective protection class II lampholders permit technically and cost-effective construction of protection class II luminaires.

Protection class III luminaires provide protection against electrical shock by using Safety Extra Low Voltage (SELV). Luminaires of protection class III are not permitted to generate higher voltages than the Safety Extra Low Voltage (SELV).



Ballasts with double or
reinforced insulation



Protection class III

Protection classes of luminaires and operating devices

IEC 60529 (EN 60529) defines protection classes for enclosures of casings. The IP Code (International Protection Code) describes the level of protection provided against accidental contact and penetration by foreign bodies as well as protection against water. The first number stands for protection against foreign bodies, the second stands for protection against water. These specifications are important with particular regard to built-in or mounted luminaires as the provisions governing protection against accidental contact provide the basis for the insulation system for components and conductors (also see luminaire standard EN 60598-1).

To comply with the IP requirements, the installation instructions supplied by the luminaire and/or operating device manufacturer(s) must be observed.

Number	1st Number		2nd Number
	Protection against contact	Protection against foreign bodies	Protection against water
0	No protection	No protection	No protection
1	Protected against contact with the back of the hand	Protected against solid foreign bodies Ø ≥ 50 mm	Protected against vertically dripping water
2	Protected against finger contact	Protected against solid foreign bodies Ø ≥ 12 mm	Protected against diagonally dripping water (angle of 15° from above)
3	Protected against contact with tools	Protected against solid foreign bodies Ø ≥ 2.5 mm	Protected against diagonal water spray up to an angle of 60° from above
4	Protected against contact with wire	Protected against solid foreign bodies Ø ≥ 1 mm	Protected against water splashes from any direction
5	Protected against contact with wire	Protected against dust	Protected against jets of water
6	Protected against contact with wire	Dust-tight	Protected against strong jets of water
7	–	–	Protected against temporary immersion in water
8	–	–	Protected against permanent submersion in water. Specific testing conditions must be agreed, especially with regard to high-pressure cleaning equipment.
9	–	–	For high-pressure cleaning IPx9 in accordance with DIN 4005

If any components like ballasts or conductors of built-in or mounted luminaires (e.g. wall-mounted luminaires) are accessible to accidental contact, they must comply with the requirements of the two safety levels stipulated for these components. Luminaire construction must be in line with these conditions, which can mean that, for instance, conductors have to feature additional or reinforced insulation.

For lampholders the compliance with the two safety levels is proved by conducting a special voltage test.

Selection of components, materials and dimensions

The documentation provided by Vossloh-Schwabe is carefully researched. Technical advice is given to the best of our knowledge. The details on the product or the type plate are binding in every case.

Any manipulation of VS products or product packaging is illegal and violates registered trademark rights. Manipulations can negatively influence or destroy technical properties and can possibly result in secondary damage. Vossloh-Schwabe does not accept any liability for manipulated products and cannot be held responsible for any secondary damage.

Manufacturers of luminaires and lighting systems remain responsible for the selection of suitable luminaire components, e.g. operating devices and lampholders, and component materials just as for their safe and correct installation in line with luminaire and system set-up regulations.

Particular attention should be paid to the following:

- temperature measurements and temperature limits
- compliance with creepage and air clearance distances and insulation thicknesses
- selection of components to suit their operating conditions and degree of strain (e.g. voltage, current, mechanical loading, UV radiation)
- protection against contact and safe protective earth conductor connections
- resistance to corrosion

The product drawings without tolerances are contained in this catalogue only feature nominal dimensions. For space and simplicity reasons, the full dimensions and particularly the associated tolerances cannot be shown. For detailed information resp. details of luminaire design, please request our in-depth dimensional assembly drawings.

All VS products comply with the relevant standards and are developed and produced using the latest technological expertise.

To ensure safe luminaire production we do not recommend reusing dismantled lampholders.

Impulse voltage categories for lampholders

Lampholder	Standard	Impulse voltage category
E14: 250 V / 2 A	IEC 60238 / VDE 0616-1	2
E27: 250/500 V / 4 A		2
E40		2
Starters: 250 V / 2 A	IEC 60400 / VDE 0616-3	2
Fluorescent lamps 250 V / 500 V / 2 A	IEC 60400 / VDE 0616-3	2
Halogen lamps and other lamps	IEC 60838-1 / VDE 0616-5	2
Bayonet fitting	IEC 61184 / VDE 0616-2	2

Torques for screws

With regard to lampholders secured with screws, we recommend using a torque of around 80% of the value stipulated in DIN EN 60598-1

Nominal diameter of the screw's outside thread mm	Torque (Nm) for screws with a head in acc. with DIN EN 60598-1
to 2.8	0.40
< 2.8 to 3.0	0.50
< 3.0 to 3.2	0.60
< 3.2 to 3.5	0.80
< 3.6 to 4.1	1.20
< 4.1 to 4.7	1.80
< 4.7 to 5.3	2.00
< 5.3 to 6.0	2.50

A type, B type capacitors	The requirements of the safety standard for capacitors differentiates between capacitor types; A type capacitors stand for plastic can capacitors; B type capacitors stand for aluminium can capacitors.
AG DALI	International working group under the umbrella of ZVEI (the German Electrical and Electronic Manufacturers' Association) in support of DALI (Digital Addressable Lighting Interface).
Analogue interface 1–10 V	Bipolar interface of dimmable operating devices with a built-in constant current source.
Average service life	Specified service life of electronic operating devices with a failure rate per unit of time.
Ballast	Device that is connected in between the voltage supply and one or more discharge lamps and serves the purpose of igniting the lamps and limiting lamp current during operation.
Ballast-Lumen Factor (luminous flux factor of a ballast)	The ratio of luminous flux emitted by a reference lamp when operated with a particular production ballast to the luminous flux emitted by the same lamp when operated with its reference ballast.
Capacitive circuit (series compensation)	Circuit of an inductive ballast with a capacitor connected in series.
CE Mark	European regulation governing all products that are introduced to the market. Products must comply with the respective EC directives.
CELMA	Association of European component and luminaire manufacturers (Committee of E.E.C. Luminaires Components Manufacturers Associations).
CENELEC	European committee for electronic standardisation (Comité Européen de Normalisation Electrotechnique).
CISPR	International special commission for radio interference (Comité International Spécial des Perturbations Radioélectriques).
Colour rendering index (CRI) R_a	Index to determine the degree of deviation from a viewed body colour (with 8 standardised test colours) under a given type of lighting. R_a = 100 denotes a light source that causes no distortion of any colour. Lower R_a values denote light sources with less positive colour rendition properties.
Compensated circuit (parallel compensation)	Circuit of an inductive ballast with a capacitor between phase and neutral conductor.
Compensation capacitors	The power factor can be increased to a value of 0.9–0.98 by using compensation capacitors.
Conformity declaration	Documentation for an operating device or a luminaire regarding compliance with European directives; this documentation is for submission to national supervisory authorities (e.g. regulation authority for telecommunications and post (Reg. TP) or trade supervisory authorities).
Convertors	Electronic convertor (electronic conversion of mains voltage in extra-low voltage) to generate operating voltage for low-voltage halogen lamps.
Creepage and air clearance distances	Regulation minimum distances between voltage-carrying components of different polarity or between voltage-carrying components and the accessible casing surfaces (air clearance: shortest distance through air; creepage distance: shortest distance across a surface).
Cross discharge	Discharge in the lamp electrode region during preheating.
DALI	Digital interface for controlling dimmable electronic operating devices (Digital Addressable Lighting Interface).
Δt	Increase in the winding temperature during the operation of a ballast (the ballast is mounted on 75 mm high wooden blocks and its temperature is measured at an ambient temperature of 25 °C).
Δt_{an}	Temperature increase during short-circuit operation (e.g. defective starter, defective lamp).
DIAL	German institute for applied lighting technology (Deutsches Institut für Angewandte Lichttechnik), Lüdenscheid, Germany.
DKE	German electrotechnical commission of the DIN and VDE.
EC directives	Regulations (laws) of the European Community that have to be transposed into national laws within a prescribed period of time.
Efficiency	Ratio of power output in relation to power input.
ELC	European Lamp Companies Federation
EMC	Electromagnetic compatibility
EMF	Electromagnetic fields
ENEC agreement	Agreement between the European testing institutes for issuing the European test mark.
ENEC mark	Marking for a device that complies with the European standards and that was tested by a testing institute that is a part of the ENEC agreement (European Norms of Electrical Certification).
Energy classification EEI	CELMA system to determine energy classes for ballasts for fluorescent lamps (Energy Efficency Index).
Error current	Current that is caused by a fault in the insulation of a device or via creepage or air clearance distances.
Error current protection switch	Evaluates the magnitude of the error current and switches the circuit off if a predefined maximum value is reached.
Feed-through of mains voltage	The possibility of connecting two lamps to a single terminal so that an electrical connection can be made to another device.
FELV	Functional extra-low voltage without adequate protection from accidental contact with higher voltages in other parts of the same circuit.
FEP capacitors	Flame- and explosion-proof capacitors with a contact breaker.
FGL	Promotion Society for Good Lighting (Fördergemeinschaft Gutes Licht – ZVEI).
Function protection conductor	It may be necessary to connect a "function protection conductor" to ensure compliance with the EMC requirements or as a starting aid for lamps; VS operating devices are suitably marked.
IDC terminal (alf terminal)	IDC-type connection terminal (Insulation Displacement Connection) for automatic luminaire fabrication (ALF terminal).
IEC	International Electrotechnical Commission
ILCOS lamp designation system	International IEC marking system for lamps.
Illuminance E_V	Illuminance (Ev) is the total luminous flux (Φ) incident on a horizontal, vertical or angled illuminated surface (per unit area). The unit is lux [lx=lm/m²], with luminous flux in [lm] and area in [m²]. Illuminance Ev forms the basis for all lighting calculations and designs.
Impedance	Impedance is a conductor's apparent resistance to an alternating current.
IMQ	Italian institute for quality marking; at the same time, the mark of conformity with standards (Istituto Italiano del Marchio di Qualitá).

Independent lamp operation	Possibility of operating a single lamp with a multi-lamp operating device after the other lamps have failed.
Independent operating device	Operating device that does not have to be installed in a casing; the safety regulations are fulfilled by the operating device itself.
Inductance	Inductance establishes the connection between the current and the magnetic flux caused by it in a conductor arrangement after taking account of all design and material fluctuations.
Inductive circuit	Operation of a fluorescent lamp with a ballast without a capacitor.
Interference	Interference signals emitted by operating devices via the mains voltage or the air.
Interference immunity	Property of an operating device to remain fully functional despite interference emitted by other operating devices.
IP numbers	Code system for marking the protection level of an operating device or a luminaire against moisture or foreign bodies entering (the first figure stands for foreign bodies and the second for moisture).
IPP technology	Generating the ignition voltage required for high-pressure lamps using the special intelligent pulse pause technology.
LBS lamp designation System	Marking system for lamps, established for Europe.
Leak current	Current of an operating device or a luminaire that is discharged via the potential compensation conductor (earth conductor).
Light colour	Perceived colour of the light radiated by a lamp.
LED-light engine	Functional unit consisting of an LED module and control gear. The LED light module and the control gear can be used separately in two different casings or combined as a single unit.
LED (light emtting diode)	Solid state device embodying a p-n junction, emtting optical radiation when excited by an electric current.
LED module	Unit supplied as a light source. In addition to one or more LED's it may contain other components, e.g. optical, electrical, mechanical and/or electronic.
Light intensity distribution curve	Represents the spatial distribution of the light intensity of light sources.
LiTG	German Association for Lighting Technology (Deutsche Lichttechnische Gesellschaft)
Luminance L	Luminance L is the luminous intensity density of an area that emits or reflects light with a certain emission angle. The unit of luminance L is [cd/m²] and is the photo-technical measure that corresponds to the subjective perception of the level of brightness of a light source or an object, while luminous flux Φ, luminous intensity I and illuminance E are not visible, i.e. not sensed by the human eye. Light only becomes visible when it hits an object that it is either reflected by or penetrates in a diffused manner. Objects of different levels of brightness therefore only seem to be darker or brighter at same illuminance because they reflect the light differently.
Luminous efficiency / efficiency	Ratio of luminous flux to power input (lm/W).
Luminous flux Φ (photon radiation)	Luminous flux Φ is the radiated/emitted light power in lumen [lm] of a light source, a unit of measurement for the number of light photons emitted in all directions. Luminous flux is the photometrical light output perceived by the human eye.
Luminous intensity I	Luminous intensity I in [cd] is decisive for characterising of a source of light and is defined as a quotient of the emitted luminous flux Φ and the radiated area of the solid angle Ω. Luminous intensity I is thus the focused luminous flux Φ within the radiated solid angle Ω. Today's LEDs can reach a luminous intensity of more than I=10 cd. The luminous intensity value depends on the viewing angle, i.e. the luminous intensity of an LED chip in a 30° reflector will be higher than that of an identical LED chip in a 60° reflector. This is because a 60° reflector results in the same luminous flux Φ having to illuminate a larger area.
Mains harmonics	Mains current distortions by higher-frequency currents.
Master/slave circuit	Operating several lamps in different luminaires with one ballast.
µF	Unit of capacitance (microfarad)
MPP capacitors	Metallised polypropylene film dielectric capacitors.
Parallel-compensated circuits	Circuit of an inductive ballast with a capacitor between phase and neutral conductor (connected in parallel to the lamp circuit).
Part load range	Variable load range up to the maximum rated load.
PELV	Protective extra-low voltage with adequate protection from accidental contact with higher voltages in other parts of the same circuit.
Phase-cutting leading-edge control	In accordance with the defined angle, voltage regions are suppressed of the positive and negative sinusoidal oscillations of the mains voltage in an upwards direction starting with the voltage zero crossing.
Pinch temperature	This is measured at a defined point of the lamp base; the permissible maximum values are internationally determined.
Polyester resin impregnation	High-grade vacuum impregnation with polyester resin.
Power factor	Ratio of true power to apparent power (total power). Lambda (λ) expresses the power factor for non-sinusoidal currents and voltages. In contrast, cos φ (phi) expresses the power factor for sinusoidal currents or voltages.
Pulse Ignition	Generation of the ignition voltage for high-pressure lamps with the help of ballasts (ballast insulation must match the ignition voltage).
PUSH	Key-operated bipolar interface of VS electronic ballasts for controlling the brightness of connected lamps.
Reference ballast	Special ballast that is either inductive for lamps operated with mains voltage or ohmic for lamps operated at high frequencies. Reference ballasts are designed to deliver comparable values for testing ballasts, selecting reference lamps and testing mass-produced lamps under standardised conditions.
Reference lamp	When used in combination with a suitable reference ballast, reference lamps provide key electrical data that are close to the target values laid down in the lamp standards.
Safety transformer	Isolation transformer for supplying circuits with safety extra-low voltages.
SELV	Safety extra-low voltage.
Short-circuit-proof	Short-circuit-proof operating devices do not pose a safety risk if a short-circuit occurs at the output of the operating device; a difference is made between operating devices offering limited and unlimited protection against short-circuit; in the case of operating devices with limited short-circuit protection, an additional mechanism has to be installed.

Solid angle Ω	Solid angle Ω is the area within a sphere that is pervaded by the light emitted by a light source. The steradian (sr) is the unit of measure for solid angle, whereby 1sr = 65.5°. This describes a cone with its peak in the light source and a beam spread angle of 65.5°. A whole solid angle is expressed as 4πsr = 12.56 sr.
Standards	VS products comply with the regulations of the following European standards: • **Electronic ballasts for fluorescent lamps:** EN 61347-1, EN 61347-2-3, EN 60929, EN 55015, EN 61547, EN 61000-3-2, IEC 62493 • **Electronic ballasts for high-pressure discharge lamps:** EN 61347-1, EN 61347-2-12, EN 55015, EN 61547, EN 61000-3-2, IEC 62493 • **Electronic convertors:** EN 61347-1, EN 61347-2-2, EN 61047, EN 55015, EN 61547, EN 61000-3-2, IEC 62493 • **Electromagnetic ballasts:** EN 61347-1, EN 61347-2-8, EN 61347-2-9, EN 60921, EN 60923, EN 50294, EN 55015, EN 61547, EN 61000-3-2, IEC 62493 • **Electromagnetic transformers:** EN 61558-1, EN 61558-2-6, EN 55015, EN 61547, EN 61000-3-2, IEC 62493 • **Ignitors:** EN 61347-1, EN 61347-2, EN 60927, EN 55015, EN 61547, EN 61000-3-2 • **Capacitors:** EN 61048, EN 61049 • **Lampholders:** EN 60238, EN 60400, EN 60838-1, EN 61184, EN 60399 • **Digital control inputs of operating devices:** IEC 62386 • **LED:** IEC 62031, IEC 61347-1, IEC 61347-2-13, IEC 62384, IEC 61231, IEC TR 61341, IEC 60838-2-2, IEC 62471(-1), EC 62471-2 • **EMC/EMF:** EN 55015, EN 61547, EN 61000-3-2, IEC 62493
Stroboscopic effect	Optical illusion whereby objects appear either to be moving or stationary in contrast to their actual state when illuminated by periodically alternating light.
Superimposed ignition	Generation of the ignition voltage required for high-pressure lamps by the ignitor independent of the ballast (superimposed over the mains voltage).
System power consumption	Total power input of lamp and operating device (in watt).
T rating	Rated value of the lampholder's maximum operating temperature (e.g. T130).
t_a	Ambient temperature
Tandem circuit	Series connection of two fluorescent lamps using a single ballast.
t_c	Maximum operating temperature of the casing at the marked measuring point.
Temperature details	The temperature details on our VS ballasts are always maximum values; these are based on the maximum voltage values given on the type plate.
Thermal classes	Classification of transformers according to the degree of heat resistance offered by the insulation materials.
Thermal cut-out	Protection from overheating due to abnormal lamp conditions (rectifier effect, short-circuit and overload), with automatic restart after cooling.
Transient mains overvoltages	Voltage peaks that briefly occur and are superimposed over the mains voltage.
Tungsten-halogen cycle	In the outer, cooler part of the lamp, the halogen combines with the tungsten vapour released by the filament to form a tungsten-halogen molecule which then decomposes and deposits the tungsten on the filament.
tw	Maximum permissible winding temperature.
UL, UL approval	Underwriters' Laboratories Inc., USA; US conformity mark for safety.
VDE mark	Safety mark on the basis of the German safety standard for electrical equipment; tested by the VDE-PZI (Verband Deutscher Elektrotechniker – Prüf- und Zertifizierungsinstitut).
Winding temperature	Temperature of the copper winding in a magnetic ballast; the change in winding temperature is measured using the change of the resistance of the copper winding.
Zhaga	Global industrial consortium that has taken on the task of standardising the interfaces needed for LED light engines.
ZVEI	Central association of the electrotechnical and electronics industry in Germany (Zentralverband Elektrotechnik- und Elektronikindustrie e.V.).

Ref. No.	Type	Page	Approval
100064	02120	340	1,3
100069	02150	340	1,3,33
100082	02525	181	1
100086	02543	182	1
100096	02574	181	1
100098	02575	181	1
100125	03210	450	–
100194	06700	450	–
100217	07400	451	–
100270	08610	451	–
100273	08701	451	–
100305	09105	308	1,3
100310	09205	308	1,3
100417	17400	450	–
100437	20200	349	1
100442	20400	328	–
100444	20401	328	–
100448	20501	328	–
100484	22600	322	1,3,33
100486	22601	322	1,3,33
100487	22602	322	1,3,33
100532	27151	319	1,3
100536	27200	319	1,3
100540	27201	319	1,3
100551	27356	327	1,3
100557	27450	320	1,3,33
100559	27460	320	1,3
100572	27722	327	1,3
100579	27820	317	1,3,33
100581	27821	317	1,3
100583	27822	327	1,3
100585	28100	320	1,3,33
100588	28200	320	1,3,33
100591	28500	318	1,3,33
100593	28501	318	1,3,33
100616	30023	415	1
100662	30300	406	1
100710	30523	415	1
100720	30550	415	1
100723	30602	180	1
100741	30620	180	1
100877	32100	404	1
100912	32300	412	1
100913	32301	178	1
100921	32311	178	1
100922	32321	179	1
100925	32326	179	1
100928	32330	180	1
100931	32336	180	1
100932	32341	179	1
100934	32361	179	1
100937	32381	179	1
100939	32400	399, 403, 405	1
101162	32600	404	1
101207	32620	404	1
101248	32680	404	1
101253	32690	404	1
101258	32700	399	1
101274	32720	399	1
101275	32730	399	1
101290	35002	293	1,3,33
101294	35003	293	1,3,33
101298	35004	294	1,3,33
101306	35006	294	1,3,33
101310	35007	294	1,3,33
101314	35008	294	1,3
101320	35010	294	1,3,33
101324	35011	295	1,3,33
101344	35051	295	1,3,33
101346	35052	295	1,3

Ref. No.	Type	Page	Approval
101358	35100	296	15,3
101364	35201	295	1,3,33
101367	35202	296	1,3,33
101410	35812	285	1,3
101448	35862	285	1,3
101485	36050	298	1,3,33
101489	36051	298	1,3,33
101491	36052	299	1,3,33
101493	36053	299	1,3
101497	36061	302	–
101521	36300	297	1,3
101528	40100	336	1,3
101532	40150	336	–
101627	43000	341	1,3,33
101629	43010	341	1,3
101631	43100	341	1,3
101636	43300	342	1,3,33
101643	46100	326	1,3
101647	46101	326	1,3
101651	46102	328	1,3
101655	46103	328	1,3
101681	47102	324	1,3
101706	47200	324	1,3
101708	47202	324	1,3
101712	47205	325	1,3
101716	47206	325	1,3
101740	47502	324	1,3
101745	47504	325	1,3
101765	47600	324	1,3
101769	47605	325	1,3
101773	47606	325	1,3
101781	47700	325	1,3
101784	47900	326	1,3,33
101785	47920	326	1,33
101787	48500	326	1,3
101789	48501	326	1,3
101791	48502	328	1,3
101793	48503	328	1,3
101812	49401	327	1
101910	52001	430	1
102407	58001	336	–
102409	58016	336	1,3
102577	62010	44, 167	1
102582	62015	44, 167	1
102599	62050	44, 167	1
102615	62104	167	1
102617	62105	167	1
102624	62310	168, 441	1
102635	62600	166	1
102637	62601	166	1
102923	78100	407	1,3
102925	78101	407	1,3
102938	80003	429	–
102939	80003	429	–
102946	80006	429	–
102947	80006	429	–
102956	80014	445	–
103020	80342	443	–
103021	80342	443	–
103026	80343	443	–
103027	80343	443	–
103031	80345	443	–
103032	80345	443	–
103042	80353	443	–
103043	80353	443	–
103087	80433	452	–
103359	81019	429	–
103360	81019	429	–
103365	81022	429	–
103366	81022	429	–

1 ENEC
1a applied

3 c UL us

5 CSV

7

13 KEMA KEUR

13a KEMA EMC

14 VDE

14a applied

15 VDE

17

19

25

28 VDE EMV

31 IRAM

32 SABS

33 CQC

34 c UL us

35 ETL RECOGNIZED COMPONENT US

Ref. No.	Type	Page	Approval
103414	81093	426	–
103415	81093	426	–
103424	81095	425	1,33
103430	81109	426	–
103431	81109	426	–
103442	81120	426	–
103443	81120	426	–
103467	83000	437	–
103468	83000	437	–
103483	83002	437	–
103484	83002	437	–
103504	83006	445	1
103515	83008	445	1
103520	83011	437	1,33
103569	83173	437	–
103570	83173	437	–
103582	83218	442	–
103583	83218	442	–
103587	83218	445	–
103590	83219	442	–
103591	83219	442	–
103594	83219	445	–
103595	83221	442	1
103597	83223	442	1
103643	83285	437	1,33
103709	84122	335	–
103710	84122	335	–
103711	84123	335	–
103712	84123	335	–
103743	84154	335	–
103744	84154	335	–
103749	84159	335	–
103750	84159	335	–
103818	86037	182	–
104928	94304	443, 445	–
105144	96010	443, 445	–
105179	96033	444	–
105185	96034	444	–
105448	97031	300	–
105482	97064	343	–
105483	97065	343	–
105484	97065	343	–
105775	35060	300, 301	–
105776	35060	300, 301	–
105777	35760	301	–
105820	97515	300	–
105824	97516	300	–
105843	97532	329	–
105845	97533	329	–
105847	97534	329	–
105931	35061	301	–
105981	97638	302	–
106094	98085	334	–
106095	98086	343	–
106248	32800	401	1,34
106249	32820	401	1,34
106256	94060	406	–
106262	35842	285	1,3
106416	35060	300, 301	–
106417	35760	301	–
106455	09210	308	1,3
106457	32480	404	1
106513	78201	407	1,34
106583	78201	407	1,34
106585	62110	167	1
106766	94067	451	–
106767	94068	451	–
106768	94069	451	–
106802	94074	451	–
106817	98006	448	–

Ref. No.	Type	Page	Approval
106818	02170	341	1,3
106829	94450	452	–
106893	35814	287	1,3
106912	35912	285	1,3
106948	09501	455	–
106949	09502	455	–
107065	31662	177	1
107066	31672	177	1
107096	83015	446	1
107154	05202	450	–
107177	96242	435	–
107178	96206	435	–
107192	32360	414	1
107193	32340	414	1
107194	32320	413	1
107195	32310	413	1
107213	32390	413	1
107214	32391	413	1
107215	32395	413	1
107331	83015	446	1
107445	43410	343	1
107536	09000	337	1,3
107617	35844	287	1,3
107618	35864	287	1,3
107677	21100	183	34
107694	33100	407	–
107716	81096	425	1,33
107723	43510	342	1
107780	12801	169, 456	1
107861	35914	287	1,3
107944	81020	428	1
107957	84171	331	1
107958	84172	332	1,3
107959	84173	331	1
107960	84174	332	1,3
108208	12800	169, 456	1
108257	31936	530	3
108266	98003	314, 329, 331	–
108267	98004	314, 332	–
108304	97159	453	–
108373	12812	170, 456	1
108374	12810	170, 456	1
108375	12811	170, 456	1
108416	62622	167	1
108437	28920	321	1,3
108438	28921	321	1,3
108449	30471	401	1
108454	43500	342	1
108575	35944	287	1,3
108576	35964	287	1,3
108608	84175	332	1,3
108614	84175	332	1,3
108666	84172	332	1,3
108669	84174	332	1,3
108671	43020	341	1,3
108674	30350	406	1
108678	94071	403	–
108718	62150	166	1
108719	62151	166	1
108730	48230	321	1
108747	64740	432	1,33
108748	64800	448	1
108758	64741	433	1,33
108773	22800	322	1
108775	22801	322	1
108777	22850	322	1
108778	22851	322	1
108780	97044	329	–
108816	22604	322	1,3
108819	22852	333	1

1 ENEC
1a applied
3
5
7
13
13a
14 VDE
14a applied
15
17
19
25
28
31
32
33
34
35

Ref. No.	Type	Page	Approval
108845	97117	330	–
108847	17803	450	–
108878	36060	302	–
108898	35012	295	1,3,33
108927	35500	296	1,3
108928	35510	296	1,3
108932	35530	297	1,3
108933	35540	297	1,3
108934	35550	297	1,3
108936	64401	431	1,33
108937	02500	181	1
108940	85007	416	–
108947	98002	314, 333	–
108948	84180	333	1
108953	64770	432	1,33
108956	97194	453	–
108965	64501	431	1,33
108979	31000	410	1,34
108983	64307	421	1,33
108984	22900	322	1
108994	84181	333	1
109007	31010	410	1,34
109014	12870	528	3
109039	83007	438	–
109041	81130	427	–
109044	96172	439	–
109045	97511	435	–
109052	83007	438	–
109054	81130	427	–
109060	96172	439	–
109062	97511	435	–
109074	83293	438	–
109077	85070	433	–
109081	83274	439	–
109084	96159	427	–
109086	97147	330	–
109087	83293	438	–
109092	85070	433	–
109093	83274	439	–
109095	96159	427	–
109098	83035	438	–
109099	83035	438	–
109102	81002	426	–
109103	81002	426	–
109110	85075	422	–
109112	85075	422	–
109119	97666	423	–
109120	97666	423	–
109122	97635	423	–
109123	97635	423	–
109126	97697	423	–
109145	81024	426	–
109149	96211	427	–
109150	96211	427	–
109152	81132	427	–
109153	81132	427	–
109158	83297	447	1
109159	83282	435	–
109162	03210	450	–
109166	05202	450	–
109184	97698	434	–
109187	96148	438	–
109188	96148	438	–
109190	96154	439	–
109191	96154	439	–
109195	96147	438	–
109196	96147	438	–
109198	83260	446	–
109199	83260	446	–
109200	96229	446	–

Ref. No.	Type	Page	Approval
109201	96229	446	–
109235	35610	292	1,3
109238	35611	292	1,3
109240	35612	292	1,3
109243	83300	448	–
109247	09708	454	–
109248	09701	454	–
109249	09703	454	–
109253	09701	454	–
109280	96033	444	–
109281	96034	444	–
109282	83258	444	–
109283	83258	444	–
109285	08610	451	–
109291	08701	451	–
109317	96160	455	–
109318	96160	455	–
109330	27700	316	1,3,33
109331	27701	316	1,3,33
109332	27800	316	1,3
109335	27801	316	1,3
109338	28500	317	1,3,33
109339	28501	317	1,3,33
109340	28600	317	1,3,33
109341	28601	317	1,3,33
109342	28700	531	1,3
109343	28701	531	1,3
109376	28725	531	1,3
109377	28726	531	1,3
109383	64001	420	1,33
109384	64001	420	1,33
109386	64101	420	1,33
109387	64101	420	1,33
109411	97244	411	–
109429	64501	431	1,33
109462	83282	435	–
109487	48300	326	1
109497	32380	414	1
109512	96124	439	–
109518	12876	528	3
109532	84000	315	–
109547	33300	398, 402, 405	1,34
109548	97255	398	–
109550	97257	398, 409	–
109553	94095	403	–
109554	94096	405	–
109555	97260	435	–
109556	97260	435	–
109559	96124	439	–
109560	97698	434	–
109568	62111	167	1
109575	97065	343	–
109592	09705	455	–
109600	09704	455	–
109621	94435	452	–
109622	94436	452	–
109674	33400	398	1,34
109676	97636	422	–
109677	97636	422	–
109679	97665	434	–
109680	97665	434	–
109685	94088	312	–
109686	09170	312	1,3
109725	97750	453	–
109728	97752	453	–
109784	02110	340	1,3,33
109790	43200	342	1,3
109792	43210	342	1,3,33
109794	97664	434	–
109795	97664	434	–

1 ENEC
1a applied

3 c UL us

5 CSV

7

13 KEMA KEUR

13a KEMA EMC

14 VDE

14a applied

15 VDE

17

19

25

28 VDE EMV

31 IRAM

32 SABS

33 CQC

34 c UL us

35 c ETL us

Ref. No.	Type	Page	Approval
109805	81024	426	–
109838	64770	432	–
140413	Z 70 S	144	14
140425	Z 250 S	145	14
140427	Z 400 S	146	14
140430	Z 1000 S	149	14
140432	Z 2000 S	152	–
140471	Z 1000 L	150	–
140481	Z 70 K	144	14
140489	Z 250 K	145	14
140496	Z 1000 S/400 V	150	14
140497	Z 2000 S/400 V	152	14
140499	Z 3500 S/400 V	152	–
140537	CE 50	162	–
140594	Z 400 M	147	14
140597	Z 400 M K	147	14
140607	Z 1000 TOP	149	14
140608	Z 1200/2,5	151	–
140609	Z 1200/9	151	–
140613	PZS 1000 K	154	14
140617	PZI 1000/1 K	154	14
140621	PU 12 K	157	14
140622	PU 120 K	157	14
140623	PU 121 K	157	–
140627	AS 1000 K	160	–
140693	Z 400 M S	147	14
141193	AS 1000 K A10	161	–
141580	Z 70 K D20	144	14
141581	Z 250 K D20	145	14
141582	Z 400 M K D20	147	14
141583	Z 400 S D20	146	14
141584	Z 1000 S D20	149	14
142098	ZPU 70 K D20	158	14
142099	ZPU 250 K D20	158	14
142150	PR 12 K D	157	14
142170	PR 12 K LC	157	14
142320	Z 70 K	144	14
142330	Z 70 K D20	144	14
142340	Z 250 K	145	14
142350	Z 250 K D20	145	14
142360	Z 400 M K	147	14
142361	Z 400 M K VS-Power	147	14
142370	Z 400 M K D20	147	14
142783	PZ 1000/400 V A5	153	14
142784	PZ 1000 K D20	153	14
142897	Z 400 M K VS-Power	147	14
146990	Z 750 S	148	14
147707	Z 400 M VS-Power	147	14
147790	HZ 600 K	155	–
147791	HZ 1000 K	156	–
147793	HZ 2000 K/400 V	156	–
149992	SU 1-10 V K	159	–
149993	PR 1-10 V K LC	159	–
159968	0607	330	–
160374	SL 30.315	280	–
160597	NaHJ 250.160	120	1,19,31
160604	NaHJ 250.163	120	–
160613	NaHJ 70/50.157	119	1
161158	NaHJ 100/70.519	120	1
161367	NaHJ 35.485	119	1
161371	NaHJ 35.638	119	–
161379	NaH 50.486	119	1
161392	NaHJ 70.653	119	–
161399	NaH 50.654	119	–
161460	UNaH 70/40%.691	138	–
161469	NaHJ 100/70.703	120	1
161471	NaHJ 100/70.709	120, 138	–
161475	UNaH 150/40%.717	138	–
161662	NaHJ 70.158	119	1
161682	NaH 50II.539	135	–

Ref. No.	Type	Page	Approval
161686	NaHJ 250.915	120	1,31,32
161688	NaH 100II.918	135	14
161692	NaH 35II.538	135	–
161707	NaHJ 100.941	120	1
161757	STr 50/12.301	391	14,19
161781	STr 20/12.306	391	14,19
161816	STr 100/12G.311	393	14
161827	STr 50/12G.301	393	14
161830	STr 60/12G.303	393	14
161860	STr 20/12.306	392	14,19
161935	STr 105/12.406	392	–
162396	EST 60/12.304	388	14
162400	EST 75/12G.302	387	14
162860	L 15.107	278	1
162958	L 7/9/11.110	266	1
162966	L 13.111	266, 276	1
162976	L 16.113	266, 276	–
163007	L 7/9/11.110	268	1
163016	L 13.111	268	1
163024	L 18.114	268	1
163031	L 18I.132	266	–
163033	L 18I.132	268	–
163036	L 7/9/11.134	268	–
163041	L 7/9/11.134	266	34
163045	L 18.140	266, 277	–
163052	L 7/9/11.141	265	1,19,31
163062	L 4/6/8.142	276	1
163071	LN 13.143	265, 276	1,19,31
163084	LN 16.145	265, 276	1
163102	LN 18I.147	265	1,19,31
163148	L 7/9/11.141	268	1,19
163157	LN 13.143	268	1,19
163162	L 13.164	266, 277	–
163170	LN 18I.147	268	1,19
163180	LN 18.146	268	1,19
163189	L 13.164	268	–
163207	LN 13.143	268	1,19
163212	L 13.111	268	1
163218	L 36.188	266, 277	–
163234	L 15.201	277	–
163235	L 16.202	266, 277	–
163256	L 20.122	271, 279	34
163305	L 7/9/11.207	261	–
163318	L 7/9.209	271	34
163683	L 4/6/8.304	273	1,19,25
163694	L 7/9/11.307	260	1,19,25,31
163702	L 15.308	279	34,35
163711	LN 13.313	260, 273	1,19,25,31
163730	LN 16.316	260, 274	1,25
163763	LN 18I.319	262	1,19,25,31
163861	LN 15.329	274	1,25
164013	L 25.346	274	1
164033	L 30.347	274	19,25,31
164326	L 4/6/8.404	273	1
164335	L 7/9/11.411	261	1
164342	LN 13.413	261, 273	1
164353	LN 18I.418	263	1
164358	LN 16.417	261, 275	1
164438	L 36/40.443	263, 275	1
164555	LN 36.505	263, 275	1
164560	LN 58.506	263, 275	1
164566	LN 18.507	263, 275	1
164572	LN 18.510	262, 274	1
164590	LN 36.511	262, 274	1
164680	LN 30.530	262	–
164779	L 18I.602	264	–
164828	L 58.625	264, 275	–
164870	L 58.657	264, 275	–
167100	Q 50.501	131	1
167125	Q 50.508	131	1

1 ENEC
1a applied
3 cULus
5 CSV
7
13 KEMA KEUR
13a KEMA EMC
14 VDE
14a applied
15 VDE
17
19
25
28 VDE EMV
31
32 SABS
33 CQC
34 cULus
35 ETL RECOGNIZED COMPONENT US

Ref. No.	Type	Page	Approval
167132	Q 80.510	131	1
167136	Q 125/80.511	131	1
167140	Q 125.512	131	1
167144	Q 250.513	131	1,19,31
167185	Q 50.535	131	–
167213	Q 50.550	131	1,32
167250	Q 400.561	131	1,19,31
167263	Q 125.568	131	1,19,31,32
167299	Q 80.584	131	–
167302	Q 80.587	131	19
167304	Q 80.588	131	1,19,31,32
167306	Q 80/50.592	131	–
167311	Q 80/50.596	131	1
167326	Q 125/80.611	131	1
167330	Q 400.612	131	1,19,31,32
167335	Q 400.613	131	–
167367	Q 250.528	131	1,19,31,32
167374	Q 400.669	131	1
168108	SL 24.335	272	–
169125	STr 105/12.406	391	–
169389	LN 58.568	262, 274	1
169414	L 4/6/8.109	276	–
169496	SL 13.331	28, 272	–
169546	SL 40.333	280	–
169591	NaHJ 150/100.973	120	1
169645	LN 30.801	274	1
169647	LN 13.805	260	1
169658	L 58.718	262, 274	1
169721	NaHJ 150.995	122	1,32
169722	NaHJ 70.158	122	1,32
169727	SL 18I.334	272	–
169747	STr 105/12.311	392	15,19,31
169748	STr 50/12.401	392	–
169779	LN 36.570	262, 274	1
169830	STr 50/12.401	391	–
169892	UNaH 250/40%.983	138	–
169947	Q 125.549	131	1,19
170002	STr 105/12.311	391	15,19,31
170009	L 36.126	270, 278	–
170091	STr 50/12.301	392	14,19
170117	L 14.139	279	–
172773	Phase-cutting trailing-edge dimmer	390	–
172774	Phase-cutting leading-edge dimmer	390	–
172775	Cover plate	81, 256, 390	–
172776	Light sensor	256	–
172777	Multi sensor	256	–
172778	Manual controller	81, 256	–
174961	NaHJ 70.300	119	1,31
178177	NaHJ 250.340	120	1
178627	L 13.164	268	–
178771	NaHJ 250.727	126	1,19,32
178790	NaHJ 400.006	126	1,31,32
179231	LN 18I.130	269	1
179258	L 13.129	270, 278	1
179409	L 7/9/11.131	269	1
179414	L 4/6/8.133	278	1
179424	NaHJ 400.737	126	1,19,31,32
179444	STr 50/12.337	392	–
179454	NaH 600.005	126	1,19
179466	LN 13.134	269, 277, 278	1
179604	STr 60/12.338	391	–
179608	STr 60/12.338	392	–
179740	NaHJ 400.006	126	1,31,19
179742	NaH 600.010	126	1
179743	NaHJ 250.003	126	1
179792	EST 60/12.388	383	1,14,28
179793	EST 120/12.389	383	1,14,28
183000	EHXc 100.353	109	1,14,28
183001	EHXc 100.353	109	1,14,28
183026	EHXe 35.356	104	14,28

Ref. No.	Type	Page	Approval
183027	EHXe 70.357	104	14,28
183028	EHXc 50.358	103	1,14,28
183029	EHXc 50.358	103	1,14,28
183030	EHXc 50.358	103	1,14,28
183031	EHXc 50.359	105	1,14,28
183033	EHXc 35.325	103	1,14,28
183034	EHXc 35.325	103	1,14,28
183035	EHXc 35.325	103	1,14,28
183036	EHXc 70.326	103	1,14,28
183037	EHXc 70.326	103	1,14,28
183038	EHXc 70.326	103	1,14,28
183039	ELXc 424.223	249	1,14,28
183040	ELXc 226.878	237	1,14,28
183046	EHXc 150G.334	109	1,14,28
183047	EHXc 150G.334	109	1,14,28
183048	EHXd 50.360	110	14,28
183049	EHXd 70.361	110	14,28
183050	EHXd 100.362	110	14,28
183051	EHXd 150.363	110	14,28
183052	EHXd 250.364	110	14,28
183053	EHXd 50.365 M	110	14,28
183054	EHXd 70.366 M	110	14,28
183055	EHXd 100.367 M	110	14,28
183056	EHXd 150.368 M	110	14,28
183057	EHXd 250.369 M	110	14,28
183060	EHXd 50.360	111	14,28
183061	EHXd 70.361	111	14,28
183062	EHXd 100.362	111	14,28
183063	EHXd 150.363	111	14,28
183064	EHXd 250.364	111	14,28
183065	EHXd 50.365 M	111	14,28
183066	EHXd 70.366 M	111	14,28
183067	EHXd 100.367 M	111	14,28
183068	EHXd 150.368 M	111	14,28
183069	EHXd 250.369 M	111	14,28
186005	EST 70/12.601	385	1,14,28
186007	EST 105/12.602	385	1,14,28
186032	EST 70/12.618	389	1,14,28
186033	EST 105/12.619	389	1,14,28
186050	Potentiometer	390	–
186068	EST 200/12.649	384	1,13,28
186072	EST 70/12.380	382	1,14,28
186074	EST 70/12.380	388	1,14,28
186077	EST 105/12.381	382	1,14,28
186079	EST 105/12.381	388	1,14,28
186081	EST 35/12.650	382	1,14,28
186098	EST 150/12.622	382	1,14,28
186103	EDXe 170/24 V	88, 89	14
186104	EDXe 170/24 V	88, 89	14
186105	EDXe 170/24 V IP67	88, 89	14
186112	EDXe 170/12 V	90, 91	13
186113	EDXe 170/12 V	90, 91	13
186114	EDXe 170/12 V IP67	90, 91	13
186115	ESTd 70/12.660	386	1,14,28
186116	ESTd 150/12.661	386	1,14,28
186117	EST 70/12.643	384	1,14,28
186118	EST 105/12.644	384	1,14,28
186119	EST 150/12.645	384	1,14,28
186121	ESTd 105/12.662	386	1,14,28
186129	EDXe 120	88	14
186131	EDXe 1130/24 V	88, 89	13
186132	EDXe 1130/24 V	88, 89	13
186133	EDXe 1130/24 V IP67	88, 89	13
186136	WU-ST-001-Digi-manuell-CA	66	–
186138	WU-ST-004-Digi-DALI-CA	66	1,14
186140	WU-VB-004-Slave-PCB CA	68	–
186141	WU-VB-003-DistriPCB CA	69	–
186142	WU-ST-002-DigiLED-Slave CA	67	–
186143	WU-ST-006-DigiLED-Push	81	–
186144	WU-ST-006-DigiLED-Push CA	67	–

1 ENEC

1a applied

3 cULus

5 CSV

7

13 KEMA KEUR

13a KEMA EMC

14 VDE

14a applied

15 VDE

17

19

25

28 VDE EMV

31 IRAM

32 SABS

33 CQC

34 cULus

35 ETL RECOGNIZED COMPONENT US

Ref. No.	Type	Page	Approval
186153	WU-ST-003-Digi-DMX-CA	66	–
186154	WU-ST-005-Digi-IR-CA	66	–
186155	WU-ST-010-DigiLED-Mono CA	67	–
186157	ECXe 350mA/11W	46	1,14,28
186158	ECXe 500mA/16W	46	1,14,28
186159	ECXe 700mA/17W	46	1,14,28
186160	ECXe 1050mA/20W	46	1,14,28
186172	WU-ST-011-Passive-Slave CA	68	–
186173	EST 60/12.635	382	13
186175	ECXe 350mA/42W	46	1,14
186177	ECXd 700mA/34W	48	1,14,28
186180	ECXe 350mA/8W	46	1,14,28
186181	WU-ST-012-DigiLED-RF CA	67	–
186189	Light Controller L	476	–
186190	Light Controller LW	476	–
186191	MultiSensor SM	479	–
186192	MultiSensor FM	479	–
186193	MultiSensor IL	479	–
186194	Extender	478	–
186195	ECXd 700mA/34W	48	1,14,28
186196	ECXd 1050mA/60W	48	1,14,28
186197	ECXd 1050mA/60W	48	1,14,28
186198	ECXe 1050mA/60W	47	1,14,28
186199	ECXe 1050mA/60W	47	1,14,28
186200	ECXe 700mA/40W	47	1,14,28
186201	ECXe 700mA/40W	47	1,14,28
186202	ECXe 700mA/400mA	52	1,14,28
186203	ECXe 700mA/400mA	52	1,14,28
186204	EDXe 112	90	1,13a
186206	ECXd 700mA/40W	49	1,14,28
186207	ECXd 700mA/40W	49	1,14,28
186208	ECXd 1400mA/65W	51	1,14,28
186209	ECXd 1400mA/65W	51	1,14,28
186210	Light Controller S	477	–
186211	Magnetic-base antenna	480	–
186212	Screw-base antenna	480	–
186213	Connection cable	480	–
186216	EDXe 150/12 V	90, 91	13,13a
186217	EDXe 150/12 V	90, 91	13,13a
186218	EDXe 150/24 V	88, 89	13,13a
186219	EDXe 150/24 V	88, 89	13,13a
186223	PEW-OM 80x80 3000K	9	–
186226	ECXe 350mA/75W	53	1,14,28
186227	ECXd 350mA/75W	53	1,14,28
186229	ECXe 350mA/15W	53	1,13
186230	iDC-GPRS	494	–
186231	iLUX	495	–
186232	iMCU	497	–
186233	iLC	492	–
186234	iPC	493	–
186235	iPC-Lux	493	–
186236	iPC-RC	493	–
186237	iDC-IP	494	–
186238	iDC-FO-MM	494	–
186239	iDC-FO-SM	494	–
186242	iCT	496	–
186243	iLIC	496	–
186246	iCTI	493	–
186247	PEW-OM 80x80 4000K	9	–
186248	PEW-OM 80x80 5000K	9	–
186251	iTAB	493	–
188080	Cord grip	107	–
188093	ELXc 135.856	249	1,14,28
188094	ELXc 235.857	249	1,14,28
188095	ELXc 149.858	249	1,14,28
188130	ELXe 258.222	255	1,14
188132	ELXc 257.836	234, 235	1,14,28
188136	ELXe 218.526	255	1,14
188137	ELXe 238.527	255	1,14
188140	ELXc 140.862	229, 249	1,14,28

Ref. No.	Type	Page	Approval
188142	ELXc 154.864	249	1,14,28
188144	ELXc 180.866	229, 249	1,14,28
188223	EHXc 235.316	106	1,14,28
188224	EHXc 270.317	106	1,14,28
188238	ELXc 120.838	235	1,14,28
188273	ELXc 120.838	237	1,14,28
188276	ELXd 170.808	242	1,14,28
188314	ELXc 136.200	249	1,14,28
188315	ELXc 158.201	249	1,14,28
188316	ELXc 236.202	249	1,14,28
188317	ELXc 258.203	249	1,14,28
188319	ELXc 170.205	249	1,14,28
188320	ELXc 270.206	249	1,14,28
188329	ELXd 124.600	231, 254	1,14,28
188330	ELXd 224.601	231, 254	1,14,28
188331	ELXd 139.602	231, 254	1,14,28
188332	ELXd 154.603	231, 254	1,14,28
188333	ELXd 254.604	231, 254	1,14,28
188334	ELXd 180.605	231, 254	1,14,28
188335	ELXd 249.606	254	1,14,28
188336	ELXd 124.607	231, 253	1,14,28
188337	ELXd 224.608	231, 253	1,14,28
188338	ELXd 139.609	231, 253	1,14,28
188339	ELXd 239.610	231, 253	1,14,28
188340	ELXd 154.611	231, 253	1,14,28
188341	ELXd 254.612	231, 253	1,14,28
188342	ELXd 180.613	231, 253	1,14,28
188343	ELXd 249.614	253	1,14,28
188344	ELXd 118.615	231, 254	1,14,28
188345	ELXd 218.616	231, 254	1,14,28
188346	ELXd 136.617	231, 254	1,14,28
188347	ELXd 236.618	231, 254	1,14,28
188348	ELXd 158.619	254	1,14,28
188349	ELXd 258.620	254	1,14,28
188350	ELXd 239.621	231, 254	1,14,28
188400	ELXc 257.836	236, 237	1,14,28
188431	ELXd 226.801	242	14,28
188438	ELXc 414.868	249	1,14,28
188454	ELXc 113.392	234	1,14,28
188455	EHXc 235.316	106	1,14,28
188456	EHXc 270.317	106	1,14,28
188490	ELXd 226.801	242	14,28
188495	ELXd 170.808	242	1,14,28
188549	ELXd 218.803	242	1,14,28
188550	ELXd 242.807	242	1,14,28
188564	ELXd 118.802	242	1,14,28
188565	ELXd 142.806	242	1,14,28
188589	ELXc 128.869	234, 235	1,14,28
188590	ELXc 128.869	236, 237	1,14,28
188595	ELXc 336.214	249	1,14,28
188596	ELXd 318.622	253	1,14,28
188597	ELXd 324.623	231, 253	1,14,28
188598	ELXd 424.624	231, 253	1,14,28
188599	ELXd 418.625	253	1,14,28
188600	ELXd 324.626	231, 254	1,14,28
188601	ELXd 318.627	254	1,14,28
188602	ELXd 424.628	231, 254	1,14,28
188603	ELXd 418.629	254	1,14,28
188604	ELXd 280.630	253	1,14,28
188605	ELXd 280.631	254	1,14,28
188616	ELXc 240.863	229, 249	1,14,28
188617	ELXc 249.859	249	1,14,28
188618	ELXc 254.865	229, 249	1,14,28
188619	ELXc 280.538	229, 249	1,14,28
188643	ELXc 242.837	234, 235	1,14,28
188660	ELXe 418.215	255	–
188661	ELXs 116.900	228, 245	14,28
188662	ELXs 116.903	228, 245	14,28
188663	ELXs 121.901	228, 245	14,28
188664	ELXs 121.904	228, 245	14,28

1 ENEC
1a applied
3 cULus
5 CSV
7
13 KEMA KEUR
13a KEMA EMC
14 VDE
14a applied
15 VDE
17
19
25
28 VDE EMV
31 IRAM
32 SABS
33 CQC
34 cULus
35 ETL

Ref. No.	Type	Page	Approval
188665	ELXs 124.902	228, 245	14,28
188666	ELXs 124.905	228, 245	14,28
188667	ELXs 126.906	228	14,28
188668	ELXs 126.907	228	14,28
188680	ELXc 155.378	235	1,14,28
188681	ELXc 155.378	237	1,14,28
188682	ELXc 170.833	235	1,14,28
188683	ELXc 170.833	237	1,14,28
188687	ELXc 242.837	236, 237	1,14,28
188694	ELXd 118.802	242	1,14,28
188695	ELXd 142.806	242	1,14,28
188696	ELXd 218.803	242	1,14,28
188697	ELXd 242.807	242	1,14,28
188698	ELXc 213.870	234	1,14,28
188699	ELXc 218.871	234	1,14,28
188700	ELXc 142.872	234, 235	1,14,28
188704	ELXc 136.207	250	14
188705	ELXc 236.208	250	14
188706	ELXc 158.209	250	14
188707	ELXc 258.210	250	14
188708	ELXc 136.207	250	14
188709	ELXc 236.208	250	14
188710	ELXc 158.209	250	14
188711	ELXc 258.210	250	14
188712	ELXc 213.870	236	1,14,28
188713	ELXc 218.871	236	1,14,28
188714	ELXc 142.872	236, 237	1,14,28
188717	ELXd 135.823	253	1,14,28
188744	ELXc 418.204	249	1,14,28
188760	ELXc 217.873	234	1,14,28
188761	ELXc 217.873	236	1,14,28
188792	EMXs 180.000	501	13
188793	EMXs 180.001	501	13
188794	EMXs 180.002	501	13
188795	EMXs 180.003	501	13
188823	EMXs 180.000	501	–
188824	EMXs 180.001	501	–
188825	EMXs 180.002	501	–
188826	EMXs 180.003	501	–
188827	Battery holder	501	–
188828	Battery holder	501	–
188829	Battery holder	501	–
188864	ELXd 117.715	243	1,14,28
188865	ELXd 117.715	244	1,14,28
188866	ELXd 217.717	243	1,14,28
188867	ELXd 217.717	244	1,14,28
188868	ELXc 136.216	251	1,14,28
188869	ELXc 236.217	251	1,14,28
188870	ELXc 158.218	251	1,14,28
188871	ELXc 258.219	251	1,14,28
188873	ELXd 118.718	231, 253	1,14,28
188874	ELXd 218.719	231, 253	1,14,28
188875	ELXd 136.720	231, 253	1,14,28
188876	ELXd 236.721	231, 253	1,14,28
188877	ELXd 158.722	231, 253	1,14,28
188878	ELXd 258.723	253	1,14,28
188886	ELXc 213.874	238	1,14,28
188887	ELXc 218.875	238	1,14,28
188888	ELXc 142.876	238, 239	1,14,28
188889	ELXc 242.877	238, 239	1,14,28
188912	ELXc 136.216	251	1,14,28
188913	ELXc 236.217	251	1,14,28
188914	ELXc 158.218	251	1,14,28
188915	ELXc 258.219	251	1,14,28
188919	EHXc 35.339	105	1,14,28
188920	EHXc 70.340	105	1,14,28
188921	ELXc 135.220	250	14,28
188922	ELXc 235.221	250	14,28
188923	ELXd 142.709	243	1,14,28
188924	ELXd 142.709	244	1,14,28

Ref. No.	Type	Page	Approval
188945	ELXc 139.632	248	1,14,28
188946	ELXc 154.633	248	1,14,28
188947	ELXc 180.634	248	1,14,28
188948	ELXc 239.635	248	1,14,28
188949	ELXc 254.636	248	1,14,28
188950	ELXc 280.637	248	1,14,28
188952	ELXd 118.705	243	1,14,28
188953	ELXd 118.705	244	1,14,28
188954	ELXd 218.707	243	1,14,28
188955	ELXd 218.707	244	1,14,28
188974	ELXd 242.711	243	1,14,28
188975	ELXd 242.711	244	1,14,28
188991	EHXc 20.329 B	102	1,14,28
188992	EHXc 20.329 I	102	1,14,28
188993	EHXc 35G.327 B	102	1,14,28
188994	EHXc 35G.327 I	102	1,14,28
400548	32020	403	1
400671	94066	451	–
400699	80474	452	–
400732	97755	453	–
400772	80476	452	–
400779	80475	452	–
400817	85076	422	–
400818	85076	422	–
400819	85077	434	–
400820	85077	434	–
400913	12600	169	1
400914	12601	169	1
400915	12610	169	1
400916	12611	169	1
400917	12614	169	1
400918	12612	169	1
401536	94444	452	–
401549	94438	452	–
401970	97754	453	–
500105	36010	299	1
500106	36011	299	1
500296	Capacitor	514	1
500299	Capacitor	514	1
500300	Capacitor	514	1
500301	Capacitor	514	1
500302	Capacitor	514	1
500303	Capacitor	514	1
500304	Capacitor	514	1
500305	Capacitor	514	1
500315	Capacitor	514	1
500316	Capacitor	514	1
500317	Capacitor	514	1
500318	Capacitor	514	1
500319	Capacitor	514	1
500320	Capacitor	514	1
500321	Capacitor	514	1
500322	Capacitor	514	1
500323	Capacitor	514	–
500401	NaHJ 250.011	126	–
500402	NaHJ 400.737	126	1
500403	NaHJ 400.012	126	1
500574	35613	292	1,3
500757	84001	312, 315	–
500810	64401	431	1,33
500843	STr 50/12.207	391	–
500969	NaHJ 250.727	126	1,19
500976	NaHJ 250.727	126	1,19
501351	08400	444	–
501352	08400	444	–
501356	64601	431	1,33
501358	64601	431	1,33
501533	09145	309	1
501534	09146	309	1
501942	97268	410	–

1 ENEC
1a applied
3
5
7
13
13a
14 VDE
14a applied
15
17
19
25
28
31
32
33
34
35

Ref. No.	Type	Page	Approval
502004	33500	410	1,34
502064	97320	411	–
502111	31020	411	1,34
502112	31030	411	1,34
502394	33600	171	1
502416	97282	411	–
502503	05202	410	–
502515	83301	448	–
502555	35942	285	1,3
502556	35962	285	1,3
502592	STr 50/12.422	391	–
502783	Capacitor	514	1
502799	NaHJ 100.941	122	1
502818	Q 125.598	131	–
503010	NaHJ 35.485	122	1,32
503041	64781	432	1,33
503136	NaHJ 70/50.695	139	1
503457	97000	423	5
503458	97000	423	5
503579	97322	421	–
503773	98087	314, 334	–
503923	64201	420	1,33
503924	64201	420	1,33
504078	98011	314, 332	–
504109	NaHJ 250.340	120	1
504131	NaHJ 100/70.703	122, 139	1
504135	NaHJ 150/100.973	122, 139	1
504147	Capacitor	514	–
504202	28315	321	1
504296	31690	412	1
504297	31691	412	1
504302	64719	431	1,33
504303	64719	431	1,33
504416	31695	177	1
504467	Q 250.417	134	1,32
504474	Q 400.001	134	1,32
504615	97321	433	–
504640	83226	442	–
504641	83226	442	–
504643	83227	442	–
504644	83227	442	–
504669	31696	177	1
504749	96021	449	–
504769	83283	435	–
504933	97272	304	–
504938	97277	303	–
504939	97278	303	–
504964	WU-VB-VT-1-4	83	–
505002	Q 400.001	134	1
505003	97280	304	–
505014	64770	166	1
505029	31980	177	1
505030	31981	177	1
505054	NaHJ 250.915	122	1,31,32
505118	97281	304	–
505170	WU-LT-300x300	85	–
505183	WU-LT-600x600	85	–
505185	WU-LT-900x600	85	–
505192	WU-LT-900x900	85	–
505217	WU-VB-KP-1-1	83	–
505218	WU-VB-SP-1-3	83	–
505219	WU-VB-BU-6	82	–
505222	WU-VB-KB-6x28-grau	82	–
505251	93088	417	–
505389	64770	166	1,33
505607	LN 16.135	269, 278	1
505608	L 13.136	270, 278	–
505609	L 7/9/11.137	270	1
505610	L 7/9/11.138	270	–
505628	LN 10.145	278	1

Ref. No.	Type	Page	Approval
505629	LN 16.146	270, 278	–
505630	LN 18I.147	270	–
505712	L 4/6/8.132	277, 278	1
505720	64719	166	1
505721	64719	166	1
505732	09404	309, 313	1,3
505733	09405	309	1,3,33
505734	09406	309	1,3,33
505735	09415	310	1,3,33
505736	09416	310	1,3,33
505737	09420	310, 532	1,3,33
505739	09421	310, 532	1,3
505745	09426	311	1,3,33
505746	09427	311	1,3,33
505747	09440	311	1,3
505750	09450	311	1,3,33
505751	09460	312	1,3,33
505768	L 20.148	270, 278	–
505781	WU-ST-DigiLED-1 - 10 V	81	–
505782	J 400.027	126	1
505951	83310	410	–
506007	28310	321	1,33
506020	09607	455	17
506024	09607	455	17
506026	96155	455	–
506027	96155	455	–
506066	WU-VB-KM-1-1	83	–
506120	NaHJ 100.670	121	1,19
506122	NaHJ 35.485	121	1,32
506211	94079	451	–
506247	64360	421	1,33
506249	64360	421	1,33
506255	64775	432	1,33
506257	64775	432	1,33
506263	64785	432	1,33
506265	64785	432	1,33
506267	64785	432	1,33
506366	Capacitor	514	1
506398	33700	409	1,34
506405	SL 36.342	28, 272	–
506492	Connection cable	79	–
506495	Capacitor	514	1
506807	93089	417	–
506835	Crimping tool	82	–
506854	Flatband cable	82	–
506943	83001	447	1,33
507049	81018	429	–
507050	81018	429	–
507051	WU-VB-BU-6	82	–
507052	81017	429	–
507053	81017	429	–
507075	83283	435	–
507105	34000	402	1
507133	48205	325	1
507134	48206	325	1
507177	83005	447	–
507178	83005	447	–
507181	STr 50/12.342	391	–
507213	L 58/65.149	270, 278	–
507222	WU-ST-DigiLED-Slave	81	–
507256	Q 250.703	131	1
507341	NaHJ 70/50.157	121	1
507342	NaHJ 100/70.703	121	1
507343	NaHJ 150/100.973	121	1
507470	33710	409	1,34
507490	97257	398, 409	–
507498	NaH 50.486	122	1
507562	97677	313	–
507592	97528	180, 414	–
507593	97528	180	–

1 ENEC
1a applied
3
5
7
13
13a
14 VDE
14a applied
15
17
19
25
28
31
32
33
34
35

Ref. No.	Type	Page	Approval
507609	WU-VB-KB-6x28-grau	82	–
507610	WU-VB-KB-6x28-grau	82	–
507627	UNaH 150/100.722	139	1
507656	41900	176	1
507671	NaHJ 100.126	120	1,19
507697	NaHJ 70/50.695	122	1
507721	NaHJ 250G.533	127	1
507775	LineClip	82	–
507797	97267	454	–
507798	97267	454	–
507802	83146	443	1
507803	83147	443	1
507848	Connection cable	79	–
507967	Extension cable	79	–
507992	45930	291	14
507993	45940	291	14
507994	45960	291	14
507995	45980	291	14
508067	97037	424	5
508130	NaHJ 400G.191	127	1
508159	45990	291	14
508186	LN 58.116	262, 274	1
508245	Q 400.613	131	–
508306	33710	409	1,34
508314	09465	312	1,3
508352	96004	427	–
508353	96004	427	–
508423	28330	321	1
508468	Capacitor	514	1
508484	Capacitor	515	1
508562	97355	417	–
508563	97356	417	–
508590	09407	310	1,3
508621	WU-ST-DigiLED-Wireless IR	80	–
508667	Capacitor	514	1
508668	Capacitor	514	1
508723	NaHJ 250.340	122	1
508741	NaHJ 400.012	126	1
508744	NaHJ 250.011	126	–
508746	Q 250.417	134	1
508922	LN 18I.940	262	1
509100	NaHJ 150.355	121	1,19,31
509110	93034	409	–
509117	34301	178	1
509118	93035	409	–
509134	29300	317, 531	1,3,33
509135	29301	317, 531	1,3,33
509152	47105	323	1,3,33
509154	47106	323	1,3,33
509156	47304	323	1,3,33
509162	47505	323	1,3,33
509164	47506	323	1,3,33
509169	NaHJ 70.653	121	–
509170	NaHJ 35.638	121	–
509171	NaHJ 150.679	121	–
509213	42000	176	1,3
509214	42100	177	1,3
509263	64307	421	1,33
509295	97355	417	15
509296	97356	417	15
509340	97427	424	–
509356	31400	175	1,34
509357	33800	408	1,34
509373	L 36.120	264, 275	–
509377	WU-ST-DigiLED-manuell	80	–
509378	WU-ST-DigiLED-DMX-2	80	–
509502	LN 26.813	262	1,31
509519	93059	301	–
509520	93058	301	–
509521	93057	301	–

Ref. No.	Type	Page	Approval
509522	93056	301	–
509534	40710	348	1
509535	40730	348	1
509613	J 400.027	126	1
520733	97705	422	–
520734	97705	422	–
520735	85074	422	–
520736	85074	422	–
520759	97708	423	–
520760	97708	423	–
520865	30470	402	1,34
520880	94455	408	–
520882	94457	408	–
520935	NaH 100II.918	135	14
520992	L 13.210	261, 273	–
520998	NaH 50II.539	135	–
521010	80280	408	–
521123	84105	334	1
525583	97760	409	–
525791	STr 50/12.109	391	–
525809	LN 30.148	276	1
525873	WU-M-225 W-48 cool white	78	–
525893	80016	348	–
526018	33650	171	1,34
526019	27780	318	1
526020	27781	318	1
526021	28580	318	1
526022	28581	318	1
526151	WU-M-225 W-48 warm white	78	–
526169	Capacitor	515	1
526170	Capacitor	515	1
526171	Capacitor	515	1
526196	NaHJ 150.679	120	–
526211	31936	530	3
526517	NaHJ 35.485	119	1
526591	LN 18.220	268	1
526592	LN 18.220	265, 276	1
526593	LN 36.221	265, 276	1
526594	LN 15.144	276	1
526595	LN 30.128	278	1
526596	LN 18.127	269, 278	1
526597	LN 36.172	269, 278	1,19
526616	NaHJ 150.679	122	–
526709	40505	347	1
526710	40506	347	7
526711	40520	347	1
526712	40521	347	1
526713	40530	347	7
526714	40531	347	7
526715	Q 1000.311	134	–
526742	WU-M-291-W-5400K	23	–
526743	WU-M-292-W-5400K	23	–
526744	WU-M-293-W-5400K	23	–
526745	WU-M-294-W-5400K	23	–
526746	WU-M-295-W-5400K	23	–
526755	59000	293	1,3
526886	97497	433	–
527191	LN 36.130	262, 274	1
527196	LN 36.201	263, 275	1
527502	71001	285	1,3,33
527503	71002	285	1,3,33
527504	71003	285	1,3,33
527506	71011	285	1,3,33
527507	71012	285	1,3,33
527508	71013	285	1,3,33
527509	71014	285	1,3,33
527510	71015	285	1,3
527511	71016	285	1,3
527512	71019	285	1,3,33
527529	71101	286	1,3,33

1 ENEC
1a applied

3

5

7

13

13a

14 VDE
14a applied

15

17

19

25

28

31

32

33

34

35

Ref. No.	Type	Page	Approval
527530	71102	286	1,3,33
527531	71103	286	1,3,33
527533	71111	286	1,3,33
527534	71112	286	1,3,33
527535	71113	286	1,3,33
527536	71114	286	1,3,33
527537	71115	286	1,3
527538	71116	286	1,3
527539	71119	286	1,3,33
527556	71201	288	1,3,33
527557	71202	288	1,3,33
527558	71203	288	1,3,33
527560	71211	288	1,3,33
527561	71212	288	1,3,33
527562	71213	288	1,3,33
527563	71214	288	1,3,33
527564	71215	288	1,3
527565	71216	288	1,3
527566	71219	288	1,3,33
527585	71301	286	1,3,33
527586	71302	286	1,3,33
527587	71303	286	1,3,33
527589	71311	286	1,3,33
527590	71312	286	1,3,33
527591	71313	286	1,3,33
527592	71314	286	1,3,33
527594	71315	286	1,3
527595	71316	286	1,3
527596	71319	286	1,3,33
527649	WU-M-305-RGB	77	–
527650	WU-M-305-SO	77	–
527651	WU-M-305-SG	77	–
527652	WU-M-305-SB	77	–
527653	WU-M-305-SY	77	–
527655	WU-M-305-W-5400K	77	–
527656	WU-M-306-RGB	77	–
527657	WU-M-306-SO	77	–
527658	WU-M-306-SG	77	–
527659	WU-M-306-SB	77	–
527660	WU-M-306-SY	77	–
527661	WU-M-306-W-5400K	77	–
527735	71501	284	1,3,33
527736	71502	284	1,3,33
527737	71503	284	1,3,33
527739	71511	284	1,3,33
527740	71512	284	1,3,33
527741	71513	284	1,3,33
527742	71514	284	1,3,33
527743	71515	284	1,3
527744	71516	284	1,3
527745	71519	284	1,3,33
527762	71601	289	1,3,33
527763	71602	289	1,3,33
527764	71603	289	1,3,33
527766	71611	289	1,3,33
527768	71612	289	1,3,33
527769	71613	289	1,3,33
527770	71614	289	1,3,33
527771	71615	289	1,3
527772	71616	289	1,3
527773	71619	289	1,3,33
527790	71701	288	1,3,33
527791	71702	288	1,3,33
527792	71703	288	1,3,33
527794	71711	288	1,3,33
527795	71712	288	1,3,33
527796	71713	288	1,3,33
527797	71714	288	1,3,33
527798	71715	288	1,3
527799	71716	288	1,3

Ref. No.	Type	Page	Approval
527800	71719	288	1,3,33
528029	71801	287	1,3,33
528030	71802	287	1,3,33
528031	71803	287	1,3,33
528033	71811	287	1,3,33
528034	71812	287	1,3,33
528035	71813	287	1,3,33
528036	71814	287	1,3,33
528037	71815	287	1,3
528038	71816	287	1,3
528039	71819	287	1,3,33
528089	72001	290	1,3,33
528090	72002	290	1,3,33
528091	72003	290	1,3,33
528093	72011	290	1,3,33
528094	72012	290	1,3,33
528095	72013	290	1,3,33
528096	72014	290	1,3,33
528097	72015	290	1,3
528098	72016	290	1,3
528099	72019	290	1,3,33
528116	72101	290	1,3,33
528117	72102	290	1,3,33
528118	72103	290	1,3,33
528120	72111	290	1,3,33
528121	72112	290	1,3,33
528122	72113	290	1,3,33
528123	72114	290	1,3,33
528124	72115	290	1,3
528125	72116	290	1,3
528126	72119	290	1,3,33
528236	Q 400.616	131	1,19
528252	12900	170	15
528253	12910	171	15
528254	12911	171	15
528472	WU-M-306-W-3200K	77	–
528473	WU-M-306-W-4200K	77	–
528474	WU-M-306-W-6500K	77	–
528478	WU-M-305-W-3200K	77	–
528479	WU-M-305-W-4200K	77	–
528480	WU-M-305-W-6500K	77	–
528521	Q 700.035	134	–
528536	NaHJ 1000.089	128	1
528548	NaHJ 1000.089	128	1
528554	Capacitor	515	1
528555	Capacitor	515	1
528582	L 18.121	264, 275	1
528753	LN 15.116	278	1
528755	LN 30.117	278	–
528761	Q 1000.096	134	1
528786	WU-M-266-SB	73	–
528788	WU-M-266-SG	73	–
528790	WU-M-266-SO	73	–
528792	WU-M-266-SY	73	–
528843	WU-M-313-SOSOSO	77	–
528844	WU-M-310-WWW-5400K	77	–
528845	WU-M-310-WWW-3200K	77	–
528846	WU-M-310-WWW-4200K	77	–
528847	WU-M-310-WWW-6500K	77	–
528848	WU-M-310-SGSGSG	77	–
528849	WU-M-310-SBSBSB	77	–
528850	WU-M-314-SOSOSO	77	–
528851	WU-M-311-WWW-5400K	77	–
528852	WU-M-311-WWW-3200K	77	–
528853	WU-M-311-WWW-4200K	77	–
528854	WU-M-311-WWW-6500K	77	–
528855	WU-M-311-SGSGSG	77	–
528856	WU-M-311-SBSBSB	77	–
528886	Q 1000.145	134	1
528907	WU-M-313-SYSYSY	77	–

1 ENEC
1a applied

3 cULus

5 CSV

7

13 KEMA KEUR

13a KEMA EMC

14 VDE
14a applied

15 VDE

17

19

25

28 VDE EMV

31

32 SABS

33 CQC

34 cULus

35 ETL RECOGNIZED COMPONENT US

Ref. No.	Type	Page	Approval
528908	WU-M-314-SYSYSY	77	–
528958	12901	170	15
529029	LN 36.149	262, 274	1
529066	LN 18.173	270, 278	1
529071	LN 36.174	270, 278	1
529072	NaHJ 250.163	120	–
529087	NaHJ 250.204	120	1,19
529155	Adhesive pad 34x34	86	–
529156	Adhesive pad 306x11	86	–
529157	Adhesive pad 49x49	86	–
529158	Adhesive pad 19x19	86	–
529268	LN 15.119	276	1
529269	LN 30.120	276	1
529272	LN 18.121	266, 276	1
529273	LN 36.124	266, 276	–
529464	97498	433	–
529512	WU-M-266-WW	73	–
529524	WU-M-266-W2	73	–
529560	NaH 600.140	126	–
529596	40712	348	1
529599	64740	432	1,33
529620	WU-ST-DigiLED-DALI-3CH	80	1,14
529632	LN 30.117	278	–
529665	Capacitor	515	1
529666	Capacitor	515	1
529685	LN 58TD.120	278	1
529689	LN 58TD.175	278	1
529832	84101	313	1,3
529836	84103	314	–
529841	34311	178	1
529845	34326	178	1
530007	L 36.334	262, 274	1,19,25,31
530008	L 36/40.443	263, 275	1
530024	30400	400	1
530025	30450	400	1
530026	30460	400	1
530027	30465	400	1
530079	43520	343	1
530195	NaHJ 100.271	120	–
530252	L 36.158	264, 275	14
530458	72201	289	1,3,33
530459	72202	289	1,3,33
530460	72203	289	1,3,33
530462	72211	289	1,3,33
530463	72212	289	1,3,33
530464	72213	289	1,3,33
530465	72214	289	1,3,33
530466	72215	289	1,3
530467	72216	289	1,3
530468	72219	289	1,3,33
530535	84104	314	1,3
530829	40711	348	1
530831	40731	348	1
530878	11000	303	1,3,33
530879	11010	303	1,3,33
530941	LN 18.131	262, 274	1
531007	J 2000.44	129	–
531009	JD 2000.33	129	–
531010	J 2000.35	129	–
531011	JD 2000.36	129	–
531013	J 1200.37	129	–
531014	J 2500.38	129	–
531017	J 1000G.41	130	–
531018	NaH 1000G.46	130	–
531021	J 2000G.42	130	–
531024	J 2000G.40	130	–
531090	STr 400/12.01	395	–
531091	STr 200/12.05	395	–
531092	STr 300/12.11	395	–
531093	STr 200/24.20	395	–

Ref. No.	Type	Page	Approval
531094	STr 300/24.01	395	–
531097	STr 400/12.02	395	–
531098	STr 200/12.01	395	–
531099	STr 300/12.12	395	–
531101	STr 200/12.02	394	–
531102	STr 300/12.13	394	–
531109	STr 300/12.50	394	–
531182	VNaH 600.02	116	–
531193	VJ 2000.05	116	–
531448	JD 2000I.48	129	–
531465	JD 2000.58	129	–
531467	JD 2000I.60	129	–
531472	VNaHJ 1000.61	116	–
531474	VJD 2000.63	116	–
531475	VNaHJ 400PZT.743	115	–
531476	VNaHJ 250PZT.745	115	–
531480	VNaHJ 1000.61	116	–
531481	VJD 2000.63	116	–
532149	L 18.121	264, 275	1
532155	LN 2x18.135	262, 274	1
532377	09420	308	1a
532378	09421	308	1a
532379	09422	309	1a
532380	09423	309	1a
532390	97545	434	–
532391	80023	434, 436	–
532399	64770	436	–
532430	13010	182	–
532431	13010	182	–
532521	97685	172	–
532602	12800	169, 456	1
532603	12801	169, 456	1
532604	12810	170, 456	1
532605	12811	170, 456	1
532606	12812	170, 456	1
532610	33906	408	1
532638	WU-M-291-W-3200K	23	–
532639	WU-M-291-W-4200K	23	–
532640	WU-M-291-W-6500K	23	–
532641	WU-M-292-W-3200K	23	–
532642	WU-M-292-W-4200K	23	–
532643	WU-M-292-W-6500K	23	–
532644	L 4/6/8.218	273	–
532645	WU-M-293-W-3200K	23	–
532646	WU-M-293-W-4200K	23	–
532647	WU-M-293-W-6500K	23	–
532648	WU-M-294-W-3200K	23	–
532649	WU-M-294-W-4200K	23	–
532650	WU-M-294-W-6500K	23	–
533043	LN 18.162	263, 275	1
533067	LN 30.806	275	–
533312	41500	344	1
533313	41510	344	1
533314	41520	344	1
533315	41540	344	1
533316	41550	344	1
533317	41560	344	1
533318	Connection cable	23	–
533366	Connection cable	23	–
533391	VNaHJ 35PZTG.050	114	1
533392	VNaHJ 70PZTG.051	114	1
533393	VNaHJ 100PZTG.078	114	–
533394	VNaHJ 150PZTG.052	114	1
533395	NaHJZ 70/50.520	14, 124	1
533396	NaHJZ 100/70.519	14, 124	1
533398	NaHJZ 150/100.466	14, 124	1
533399	QZ 80/50.551	132	–
533400	QZ 125/80.553	132	–
533428	12600	169	1
533429	12601	169	1

1 ENEC

1a applied

3 cULus

5 CSV

7

13 KEMA KEUR

13a KEMA EMC

14 DVE

14a VDE applied

15 VDE

17

19

25

28 VDE EMV

31 IRAM

32 SABS

33 CQC

34 cULus

35 ETL RECOGNIZED COMPONENT US

Ref. No.	Type	Page	Approval
533430	12610	169	1
533431	12611	169	1
533432	12612	169	1
533484	NaH 600.005	126	1,19
533565	NaHJ 150.620	120	1
533568	NaHJ 70.128	119	1
533572	NaHJ 70.128	121	1
533602	NaHJ 150.159	120	1,19
533663	37001	175	1
533705	Q 250.606	131	–
533815	Adhesive pad 320x35	86	–
533820	64308	421	1,33
533860	40650	345	1
533861	40651	345	1
533865	40655	346	1
533866	40656	346	1
533947	UNaH 100/40%.452	138	–
533948	UNaH 150/40%.453	138	–
533949	UNaH 250/40%.454	138	–
533950	12500	170	1
533951	12501	170	1
533952	12510	170	1
533953	12511	170	1
533957	34510	173	1
534016	34110	174	1
534017	34111	174	1
534025	WU-LT-600x300	85	–
534073	84108	314	1,3
534080	34105	174	1
534081	34106	174	1
534087	97658	425, 436	17
534088	97701	425, 436	–
534089	97692	425	17
534090	97700	436	17
534095	Connection cable	23	–
534097	97632	454	17
534107	VNaHJ 35PZTG.053	114	1
534109	VNaHJ 70PZTG.054	114	1
534111	VNaHJ 70PZTG.067	114	–
534115	VNaHJ 150PZTG.055	114	1
534117	VNaHJ 150PZTG.068	114	–
534122	VNaHJ 35PZTG.041	114	–
534128	UNaH 70/40%.501	138	–
534218	34515	529	34
534219	34516	529	34
534220	34511	173	1
534252	LN 58.722	263, 275	1
534395	WU-M-295-W-3200K	23	–
534396	WU-M-295-W-4200K	23	–
534397	WU-M-295-W-6500K	23	–
534401	Flatband cable	82	–
534402	Flatband cable	82	–
534403	Flatband cable	82	–
534428	WU-M-266-WW2	73	–
534487	NaHJ 1000.089	128	1
534490	LN 24/26.804	262	1
534496	WU-M-266-RGB2	73	–
534540	NaHJ 150.620	120	1
534621	L 18.934	262, 274	–
534624	L18.933	264, 275	–
534627	L 18.936	263, 275	–
534644	9900	309	1
534689	98013	451	–
534832	62063	441	1
534833	62063	441	1
534835	62700	442	1
534948	41530	344	1
534954	41570	344	1
534979	34120	174	1
534992	Moisture-resistant connector	75	–

Ref. No.	Type	Page	Approval
535032	31705	411	1
535034	31755	411	1
535131	02113	340	1
535142	NaHJ 400.743	125	1
535146	30800	401	1
535191	NaHJ 70.128	121	1
535216	NaHJ 150.620	121	1
535247	97742	441, 449	–
535263	30800	401	1
535267	95300	401	–
535333	UNaH 150/40%.142	138	–
535347	UNaH 100/40%.522	138	–
535348	UNaH 70/40%.525	138	–
535357	91522	424	–
535474	97734	344	17
535610	33890	409	1,34
535631	33671	171	1
535657	VNaHJ 70PZTG.566	112	1
535673	64900	449	–
535674	64940	449	–
535684	62061	441	1
535685	62061	441	1
535694	80010	441, 449	–
535695	VNaHJ 150PZTG.567	112	1
535750	42200	176	1
535751	42210	176	1
535755	42222	176	1
535778	LN 2x18.135	263, 275	1
535783	34525	529	34
535900	WU-VB-002-HP-Feed-in-500mm	69	–
535948	WU-M-359-WW	73	–
535949	WU-M-359-SB	73	–
535950	WU-M-359-SG	73	–
535951	WU-M-359-SO	73	–
535977	L 36.132	262, 274	14
535988	30485	401	1
536051	WU-M-266-W3	73	–
536052	WU-M-266-RGB2-CA	64	–
536140	NaHJ 1000.089	128	1
536142	NaHJ 400.743	125	1
536143	NaHJ 400.743	125	1
536144	NaHJ 400.744	125	–
536145	NaHJ 400.743	125	1
536146	NaHJ 400.743	125	1
536147	NaHJ 250.741	125	1
536148	NaHJ 250.741	125	1
536149	NaHJ 250.741	125	1
536150	NaHJ 250.742	125	–
536151	NaHJ 250.741	125	1
536152	NaHJ 250.741	125	1
536164	97765	412	–
536199	VNaHJ 35PZTG.568	112	1
536200	VNaHJ 100PZTG.571	112	–
536201	VNaHJ 35PZTG.568	112	1
536202	VNaHJ 70PZTG.566	112	1
536203	VNaHJ 100PZTG.571	112	–
536204	VNaHJ 150PZTG.567	112	1
536205	VNaHJ 35PZTG.574	112	–
536207	VNaHJ 70PZTG.575	112	–
536209	VNaHJ 150PZTG.576	112	–
536210	VNaHJ 35PZTG.568	113	1
536211	VNaHJ 70PZTG.566	113	1
536213	VNaHJ 150PZTG.567	113	1
536214	VNaHJ 35PZTG.568	113	1
536215	VNaHJ 70PZTG.566	113	1
536216	VNaHJ 150PZTG.567	113	1
536217	VNaHJ 35PZTG.574	113	–
536218	VNaHJ 70PZTG.575	113	–
536219	VNaHJ 150PZTG.576	113	–
536220	12614	169	1

1 ENEC
1a applied

3 c UL us

5 CSV

7

13 KEMA KEUR

13a KEMA EMC

14 VDE

14a applied

15 VDE

17

19

25

28 VDE EMV

31

32 SABS

33 CQC

34 c us

35 c ETL us

Ref. No.	Type	Page	Approval
536248	Adhesive pad Ø28	86	–
536258	Q 400.801	133	1
536259	Q 400.801	133	1
536260	Q 250.800	133	1
536261	Q 250.800	133	1
536378	Capacitor	513	1
536379	Capacitor	513	1
536380	Capacitor	513	1
536381	Capacitor	513	1
536382	Capacitor	513	1
536383	Capacitor	513	1
536384	Capacitor	513	1
536385	Capacitor	513	1
536386	Capacitor	513	1
536387	Capacitor	513	1
536388	Capacitor	513	1
536389	Capacitor	513	1
536390	Capacitor	513	1
536391	Capacitor	513	1
536392	Capacitor	513	1
536393	Capacitor	513	1
536394	Capacitor	513	1
536395	Capacitor	513	1
536396	Capacitor	513	1
536397	Capacitor	513	1
536398	Capacitor	513	1
536399	Capacitor	513	1
536400	Capacitor	513	1
536401	Capacitor	513	1
536402	Capacitor	513	1
536403	Capacitor	513	1
536404	Capacitor	513	1
536405	Capacitor	513	1
536406	Capacitor	514	–
536428	34150	174	1
536429	34151	174	1
536445	97735	441, 449	–
536446	97735	441, 449	–
536451	62062	441	1
536452	62062	441	1
536469	31500	175	1
536582	NaHJ 70.128	122	1
536593	NaHJ 150.620	122	1
536741	Capacitor	515	1
536742	Capacitor	515	1
536743	Capacitor	515	1
536813	Capacitor	515	1
536842	WU-ST-008-DigiLED-RF	81	–
536843	WU-ST-009-Walltransmitter	67, 81	–
536977	Adhesive pad Ø43	86	–
537038	LN 58.189	262, 274	1
537056	LN 58.190	263, 275	1
537079	81100	430	–
537080	81100	430	–
537087	83141	429	1
537088	83141	429	1
537103	Q 1000.097	134	19
537132	24100	319	1,3
537135	24110	319	1,3
537138	24120	319	1,3
537144	24150	319	1,3
537147	24160	319	1,3
537150	24170	319	1,3
537153	24350	320	1,3
537155	24360	320	1,3
537157	23350	320	1,3
537160	23360	320	1,3
537165	49100	324	1,3
537166	49105	324	1,3
537167	49106	324	1,3

Ref. No.	Type	Page	Approval
537173	49500	324	1,3
537174	49505	324	1,3
537175	49506	324	1,3
537181	59100	324	1,3
537182	59105	325	1,3
537183	59106	325	1,3
537205	59500	324	1,3
537206	59505	325	1,3
537207	59506	325	1,3
537403	STr 50/12.109	392	–
537484	41600	348	1
537628	94448	453	–
537703	Q 400.801	133	1
537726	NaHJ 250.741	125	1
537744	L 15.007	275	–
537750	L 30.006	275	–
537763	NaHJ 150.620	122	1
537793	NaHJ 150.679	120	–
537869	Q 400.715	133	–
537873	Q 400.732	133	–
538034	Q 400.801	133	1
538072	L 36l.342	274	1
538089	09700	454	–
538111	WU-M-359-W	73	–
538189	NaHJ 70.128	123	1
538204	NaHJ 400.743	125	1
538258	NaHJ 35.485	123	1
538262	NaHJ 150.620	123	1
538264	NaHJ 150.620	123	1
538361	NaHJ 70/50.520	121	1
538407	NaHJ 70.128	119	1
538537	NaHJ 70.653	123	–
538540	Q 1000.096	134	1
538543	NaHJ 150.620	121	1
538592	UNaH 400/40%.892	141	–
538603	LN 75.170	275	1
538620	NaHJ 400.744	125	–
538629	34155	528	34
538675	PKNaHJ 70.128	117	–
538676	PKNaHJ 100.941	117	–
538677	PKNaHJ 150.620	117	–
538678	PKNaHJ 250.741	118	–
538679	PKNaHJ 400.743	118	–
538680	PKNaHJ 70.653	117	–
538681	PKNaHJ 100.271	117	–
538682	PKNaHJ 150.679	117	–
538683	PKNaHJ 250.742	118	–
538684	PKNaHJ 400.744	118	–
538685	PKNaHJ 70.128	117	–
538686	PKNaHJ 100.941	117	–
538687	PKNaHJ 150.620	117	–
538688	PKNaHJ 250.741	118	–
538689	PKNaHJ 400.743	118	–
538690	PRKUNaH 70/40%.525	136	–
538691	PRKUNaH 100/40%.522	136	–
538692	PRKUNaH 150/40%.142	136	–
538693	PRKUNaH 250/40%.936	137	–
538694	PRKUNaH 400/40%.906	137	–
538695	PRKUNaH 70/40%.525	136	–
538696	PRKUNaH 100/40%.522	136	–
538697	PRKUNaH 150/40%.142	136	–
538698	PRKUNaH 250/40%.936	137	–
538699	PRKUNaH 400/40%.906	137	–
538700	PRKUNaH 70/40%.525	136	–
538701	PRKUNaH 100/40%.522	136	–
538702	PRKUNaH 150/40%.142	136	–
538703	PRKUNaH 250/40%.983	137	–
538704	PRKUNaH 400/40%.937	137	–
538705	PRKUNaH 70/40%.525	136	–
538706	PRKUNaH 100/40%.522	136	–

1 ENEC

1a ENEC applied

3 cULus

5 CSV

7

13 KEMA KEUR

13a KEMA EMC

14 VDE

14a VDE applied

15 VDE

17

19

25

28 VDE EMV

31 IRAM

32 SABS

33 CQC

34 cULus

35 ETL

Ref. No.	Type	Page	Approval
538707	PRKUNaH 150/40%.142	136	–
538708	PRKUNaH 250/40%.983	137	–
538709	PRKUNaH 400/40%.937	137	–
538710	UNaH 400/40%.906	141	1
538711	UNaH 250/40%.936	141	1
538715	UNaH 400/40%.937	141	–
538801	L 18.249	264, 275	14
538807	NaHJ 35.485	123	1
538810	NaHJ 70.128	123	1
538823	NaHJ 70.128	123	1
538828	NaHJ 70.653	123	–
538830	NaHJ 70.128	122	1
538831	NaHJ 150.620	122	1
538834	NaHJ 150.620	123	1
538843	NaHJ 150.625	123	1
539050	UNaH 150/100.722	139	1
539081	NaHJ 100.581	123	1
539128	23370	320	1,3
539209	NaHJ 400.743	125	1
539212	NaHJ 1000.089	128	1
539223	NaHJ 70.128	123	1
539270	NaHJ 150.355	122	1,19,31
539274	NaHJ 250.741	125	1
539283	UNaH 250/40%.746	141	–
539286	NaHJ 150.620	123	1
539306	NaHJ 150.620	123	1
539311	NaHJ 150.679	123	–
539328	PRKUNaH 70/40%.525	136	–
539329	PRKUNaH 70/40%.525	136	–
539330	PRKUNaH 100/40%.522	136	–
539331	PRKUNaH 100/40%.522	136	–
539332	PRKUNaH 150/40%.142	136	–
539333	PRKUNaH 150/40%.142	136	–
539334	PRKUNaH 250/40%.936	137	–
539335	PRKUNaH 400/40%.906	137	–
539336	PRKUNaH 250/40%.936	137	–
539337	PRKUNaH 400/40%.906	137	–
539384	UNaH 600/40%.060	141	–
539434	NaHJ 70.128	119	1
539475	WU-VB-002-HP-100mm	69	–
539476	WU-VB-002-HP-20mm	69	–
539492	NaHJ 100.941	121	1
539497	34520	173	1
539515	NaH 50/35.797	122, 139	1
539517	UNaH 250/40%.747	141	–
539609	NaHZ 50/35.797	124	1
539614	L 4/6/8.493	278	–
539624	Adhesive pad Ø107	86	–
539625	Adhesive pad Ø63	86	–
539626	Adhesive pad 297x23	86	–
539981	LN 16.188	270, 278	–
542267	WU-VB-006-HP-Feed-in-500mm mono	69	–
542349	NaHJ 250.340	122	1
542503	41663	348	1
542557	NaHJ 150.679	123	–
542731	WU-M-359-SY	73	–
542809	WU-M-392-XPE-WW	37	14
542810	WU-M-393-XPE-WW	37	14
542811	WU-M-394-XPE-WW	38	14
542812	WU-M-395-WW-H3	41	14
542813	WU-M-396-WW-H3	41	14
542814	WU-M-397-WW-H3	41	14
542983	28740	317	1a
542984	28741	317	1a
543048	85011	416	–
543049	85012	416	–
543053	85013	416	–
543054	85014	416	–
543058	85015	416	–
543059	85016	416	–

Ref. No.	Type	Page	Approval
543153	31550	529	1,3
543187	WU-VB-008-HP-extension-400mm	69	–
543267	31530	175	1
543295	PKNaHJ 100.345	117	–
543299	PKNaHJ 150.301	117	–
543303	62370	168, 441	1
543304	62070	44, 168	1
543349	NaHJ 100.941	122	1
543378	PKNaH 50PZT.992	117	–
543384	PRKUNaH 70/40%.525	136	–
543385	PRKUNaH 150/40%.142	136	–
543386	PRKUNaH 250/40%.936	137	–
543388	PRKUNaH 100/40%.522	136	–
543389	PRKUNaH 400/40%.906	137	–
543401	PKNaHJ 35.008	117	–
543414	62415	44, 168	–
543419	51020	428	1
543420	51021	428	1
543421	51022	428	1
543422	PowerOptics XP 11°	43	–
543423	PowerOptics XP 13° diff	43	–
543424	PowerOptics XP 30°	43	–
543425	PowerOptics XP 40°	43	–
543530	32210	399, 402, 405	1
543531	WU-M-392-XPE-W	37	14
543533	WU-M-393-XPE-W	37	14
543535	WU-M-394-XPE-W	38	14
543537	WU-M-394-XPC-W	37	14
543539	WU-M-393-XPC-W	37	14
543541	WU-M-392-XPC-W	37	14
543543	WU-M-392-XPG-W	37	14
543545	WU-M-393-XPG-W	37	14
543615	97765	412	–
543640	09701	454	–
543641	09701	454	–
543643	42242	176	1
543666	WU-M-359-WW-H1	73	
543733	VNaH 50PZTG.058	114	–
543737	NaHJ 35.209	121	1
543738	NaH 50.206	121	1
543739	NaHJ 100.213	121	1
543740	NaHJ 150.216	125	1
543741	NaHJ 70.226	121	1
543742	PRKUNaH 70/40%.525	136	–
543743	PRKUNaH 100/40%.522	136	–
543744	PRKUNaH 150/40%.142	136	–
543745	PRKUNaH 250/40%.936	137	–
543746	PRKUNaH 400/40%.906	137	–
543747	UNaH 250/40%.936	141	1
543748	UNaH 400/40%.906	141	1
543770	40560	346	1
543771	40561	346	1
543772	40562	346	1
543773	40563	346	1
543777	40566	346	1
543778	40567	346	1
543781	40570	346	1
543782	40571	346	1
543783	40572	346	1
543784	40573	346	1
543787	40576	346	1
543788	40577	346	1
543793	40660	345	1
543794	40661	345	1
543795	40662	345	1
543796	40663	345	1
543800	40666	345	1
543801	40667	345	1
543802	40670	345	1
543803	40671	345	1

1 ENEC
1a applied

3 cULus

5 CSV

7

13 KEMA KEUR

13a KEMA EMC

14 VDE

14a applied

15 VDE

17

19

25

28 VDE EMV

31

32 SABS

33 CQC

34 cULus

35 ETL RECOGNIZED COMPONENT US

Ref. No.	Type	Page	Approval
543805	40672	345	1
543806	40673	345	1
543809	40676	345	1
543810	40677	345	1
543871	WU-M-392-XPC-W	37	14
543872	WU-M-392-XPC-WW	37	14
543873	WU-M-392-XPC-WW	37	14
543874	WU-M-392-XPC-WW	37	14
543875	WU-M-393-XPC-W	37	14
543876	WU-M-393-XPC-WW	37	14
543877	WU-M-393-XPC-WW	37	14
543878	WU-M-393-XPC-WW	37	14
543879	WU-M-394-XPC-W	37	14
543880	WU-M-394-XPC-WW	37	14
543881	WU-M-394-XPC-WW	37	14
543882	WU-M-394-XPC-WW	37	14
543883	WU-M-392-XPE-W	37	14
543884	WU-M-392-XPE-W	37	14
543885	WU-M-392-XPE-W	37	14
543886	WU-M-392-XPE-WW	37	14
543887	WU-M-392-XPE-WW	37	14
543888	WU-M-393-XPE-W	37	14
543889	WU-M-393-XPE-W	37	14
543890	WU-M-393-XPE-W	37	14
543891	WU-M-393-XPE-WW	37	14
543892	WU-M-393-XPE-WW	37	14
543893	WU-M-394-XPE-W	38	14
543894	WU-M-394-XPE-W	38	14
543895	WU-M-394-XPE-W	38	14
543896	WU-M-394-XPE-WW	38	14
543897	WU-M-394-XPE-WW	38	14
543898	WU-M-392-XPG-W	37	14
543899	WU-M-393-XPG-W	37	14
543900	WU-M-394-XPG-W	38	14
543901	WU-M-394-XPG-W	38	14
543902	WU-M-395-WW-H3	41	–
543903	WU-M-395-WW-H3	41	–
543904	WU-M-395-WW-H3	41	–
543905	WU-M-396-WW-H3	41	–
543906	WU-M-396-WW-H3	41	–
543907	WU-M-396-WW-H3	41	–
543908	WU-M-397-WW-H3	41	–
543909	WU-M-397-WW-H3	41	–
543910	WU-M-397-WW-H3	41	–
543986	NaHJ 400.743	125	1
544000	41600	348	1
544011	41672	348	1
544031	PowerOptics HC 14°	43	–
544032	PowerOptics HC 18° diff	43	–
544033	PowerOptics HC 32°	43	–
544034	PowerOptics HC 42°	43	–
544035	PowerOptics HC 63°	43	–
544036	PowerOpticsStrada A XP	43	–
544038	PowerOpticsStrada B XP	43	–
544210	NaHJ 250.741	125	1
544605	62009	440	1
544621	64800	448	–
544673	WU-M-392-XPC-W	37	14
544674	WU-M-392-XPC-W	37	14
544675	WU-M-393-XPC-W	37	14
544676	WU-M-393-XPC-W	37	14
544677	WU-M-394-XPC-W	37	14
544678	WU-M-394-XPC-W	37	14
544679	WU-M-392-XPE-WW	37	14
544680	WU-M-393-XPE-WW	37	14
544681	WU-M-394-XPE-WW	38	14
544682	WU-M-392-XPG-WW	37	14
544683	WU-M-392-XPG-WW	37	14
544684	WU-M-393-XPG-WW	37	14
544685	WU-M-393-XPG-WW	37	14

Ref. No.	Type	Page	Approval
544686	WU-M-394-XPG-WW	38	14
544687	WU-M-394-XPG-WW	38	14
544728	UNaH 70/40%.525	139	–
544729	UNaH 150/40%.142	139	–
544730	UNaH 100/40%.522	139	–
544760	PRKUNaH 50/40%.021	136	–
544787	NaHJ 1000.089	128	1
544804	Kühlkörper	45	–
544805	Kühlkörper	45	–
544895	34700	172	1a
544896	34720	172	1a
545007	WU-M-395-WW-H1	41	–
545008	WU-M-395-WW-H1	41	–
545009	WU-M-395-WW-H1	41	–
545010	WU-M-395-WW-H1	41	–
545011	WU-M-396-WW-H1	41	–
545012	WU-M-396-WW-H1	41	–
545013	WU-M-396-WW-H1	41	–
545015	WU-M-396-WW-H1	41	–
545016	WU-M-397-WW-H1	41	–
545017	WU-M-397-WW-H1	41	–
545018	WU-M-397-WW-H1	41	–
545019	WU-M-397-WW-H1	41	–
545185	WU-M-403-XP-2700K W1	25	14
545187	WU-M-403-XP-3000K W1	25	14
545189	WU-M-403-XP-4000K W1	25	14
545261	22860	323	1a
545262	22861	323	1a
545356	WU-VB-009-300	25	–
545383	WU-M-266-W2-Outdoor 171mm	75	–
545384	WU-M-266-W2-Outdoor 855mm	75	–
545385	WU-M-266-W2-Outdoor 1710mm	75	–
545386	WU-M-266-W3-Outdoor 171mm	75	–
545387	WU-M-266-W3-Outdoor 855mm	75	–
545388	WU-M-266-W3-Outdoor 1710mm	75	–
545389	WU-M-266-WW2-Outdoor 171mm	75	–
545390	WU-M-266-WW2-Outdoor 855mm	75	–
545391	WU-M-266-WW2-Outdoor 1710mm	75	–
545392	WU-M-266-SB-Outdoor 171mm	75	–
545405	LN 26.238	263	1
545406	WU-M-266-SB-Outdoor 855mm	75	–
545407	WU-M-266-SB-Outdoor 1710mm	75	–
545408	WU-M-266-SG-Outdoor 171mm	75	–
545409	WU-M-266-SG-Outdoor 855mm	75	–
545410	WU-M-266-SG-Outdoor 1710mm	75	–
545411	WU-M-266-SO-Outdoor 171mm	75	–
545412	WU-M-266-SO-Outdoor 855mm	75	–
545413	WU-M-266-SO-Outdoor 1710mm	75	–
545414	WU-M-266-SY-Outdoor 171mm	75	–
545415	WU-M-266-SY-Outdoor 855mm	75	–
545416	WU-M-266-SY-Outdoor 1710mm	75	–
545417	WU-M-266-RGB2-Outdoor 171mm	75	–
545418	WU-M-266-RGB2-Outdoor 855mm	75	–
545419	WU-M-266-RGB2-Outdoor 1710mm	75	–
545420	WU-M-266-RGB2-CA-Outdoor171mm	65	–
545421	WU-M-266-RGB2-CA-Outdoor855mm	65	–
545422	WU-M-266-RGB2-CA-Outdoor1710mm	65	–
545680	WU-M-403-XP-4000K W2	25	14
545689	Thermal tape Ø 48 mm Graphite	87	–
545840	29125	531	1,3
545842	29126	531	1,3
545845	29100	531	1,3
545849	29101	531	1,3
545852	29155	530	1,3
545858	29150	530	1,3
545894	09446	311	1a
545896	09447	311	1a
545933	09432	310, 532	1a
545935	09433	310, 532	1a
545937	09434	310, 532	1a

1 ENEC

1a applied

3 cULus

5 CSV

7

13 KEMA KEUR

13a KEMA EMC

14 VDE

14a applied

15 VDE

17

19 PCT

25

28 VDE EMV

31 IRAM

32 SABS

33 CQC

34 cULus

35 ETL RECOGNIZED COMPONENT US

Ref. No.	Type	Page	Approval
545939	09435	310, 532	1a
546006	97745	424	–
546075	CPS 35W 3000K	7	–
546076	CPS 35W 4200K	7	–
546077	CPS 70W 3000K	7	–
546078	CPS 70W 4200K	7	–
546088	WU-M-422-XPE-CW-30°	35	–
546089	WU-M-422-XPE-NW-30°	35	–
546090	WU-M-422-XPE-WW-30°	35	–
546161	34730	172	1a
546254	98008	314, 333	–
546271	WU-M-403-NV-3000K W1	25	14
546272	WU-M-404-NV-3000K W1	25	14
546273	WU-M-405-NV-3000K W1	25	14
546283	WU-M-403-NV-2700K W1	25	14
546284	WU-M-403-NV-4000K W1	25	14
546285	WU-M-404-NV-2700K W1	25	14
546286	WU-M-404-NV-4000K W1	25	14
546287	WU-M-405-NV-2700K W1	25	14
546288	WU-M-405-NV-4000K W1	25	14
546370	Reflector	45	–
546454	64370	420	–
546456	64370	420	–
546585	PRKUNaH 250/40%.758	137	–
546609	36020	298	1a
546612	36021	298	1a
546641	27700	316	1,3
546642	27701	316	1,3
546647	27800	316	1,3
546648	27801	316	1,3
546655	58100	315	1a
546656	58110	315	1a
546671	WU-M-421-XPC-NW	33	–
546673	WU-M-421-XPC-CW	33	–
546676	WU-M-421-XPC-WW	33	–
546680	WU-M-421-XPE-CW	33	–
546684	WU-M-421-XPE-WW	33	–
546685	WU-M-421-XPE-NW	33	–
546686	WU-M-421-XPG-CW	33	–
546687	WU-M-421-XPG-NW	33	–
546688	WU-M-421-XPG-WW	33	–
546727	WU-M-422-XPE-NW	35	–
546729	WU-M-422-XPE-CW	35	–
546733	WU-M-422-XPE-WW	35	–
546735	WU-M-422-XPE-CW-10°	35	–
546736	WU-M-422-XPE-NW-10°	35	–
546741	WU-M-422-XPE-WW-10°	35	–
546748	WU-M-422-XPE-CW-20°	35	–
546749	WU-M-422-XPE-WW-20°	35	–
546750	WU-M-422-XPE-NW-20°	35	–
546755	WU-M-422-XPE-CW-40°	35	–
546756	WU-M-422-XPE-NW-40°	35	–
546757	WU-M-422-XPE-WW-40°	35	–
546797	PKNaHJ 35.008	117	–
546817	NaHJ 70.158	122	–
547145	LN 21.293	263	–
547228	WU-M-425-CW	28	14a
547229	WU-M-425-NW	28	14a
547230	WU-M-425-WW	28	14a
547231	WU-M-425-CW	28	14a
547232	WU-M-425-NW	28	14a
547233	WU-M-425-WW	28	14a
547285	PKNaHJ 35.008	117	–
547287	PKNaHJ 70.653	117	–
547510	PowerOptics 3XP 40°	44	–
547511	PowerOptics 4XP 40°	44	–
547587	PowerOptics 3XP 30°	44	–
547588	PowerOptics 4XP 30°	44	–
547589	PowerOptics 3XP 20°	44	–
547590	PowerOptics 4XP 20°	44	–

Ref. No.	Type	Page	Approval
547591	PowerOptics 3XP 10°	44	–
547592	PowerOptics 4XP 10°	44	–
547716	PowerOptics3	42	–
547717	PowerOptics3	42	–
547718	PowerOptics3	42	–
547719	PowerOptics3	42	–
547726	LR4W XPE 3000K min P4	39	–
547788	LR4W XPE 3000K min P4	39	–
547789	LR4W XPE 3000K min P4	39	–
547790	LR4W XPE 3000K min P4	39	–
547795	LR4W XPE 6300K min Q4	39	–
547796	LR4W XPE 6300K min Q4	39	–
547797	LR4W XPE 6300K min Q4	39	–
547798	LR4W XPE 6300K min Q4	39	–
547807	34650	172	1a
547808	34651	172	1a
547837	LR4W XPE 4000K min Q2	39	–
547838	LCH-004 XPE 4500K min Q4	56	–
547860	NaHJ 70.228	119	–
547940	LR4W XPE 4000K min Q2	39	–
548030	WU-M-424-40K	33	–
548031	WU-M-424-30K	33	–
548032	WU-M-424-27K	33	–
548081	WU-VB-010	21	–
548082	WU-VB-011	21	–
548083	WU-VB-012	21	–
548135	DML62EL30/L	21	–
548136	DML62EW/L	21	–
548179	Conductive adhesive tapes	21, 86	–
548252	Thermal tape 54x54 mm	87	–
548259	NaHJ 400.743	125	1
548260	NaHJ 150.159	123	1,19
548363	LCH-008 XPE 3000K min Q3	57	–
548364	LCH-008 XPE 3000K min Q3	57	–
548366	LCH-008 XPE 3000K min Q3	57	–
548368	LCH-008 XPE 3000K min Q3	57	–
548369	LCH-008 XPE 4500K min Q4	57	–
548370	LCH-008 XPE 4500K min Q4	57	–
548372	LCH-008 XPE 4500K min Q4	57	–
548374	LCH-008 XPE 4500K min Q4	57	–
548375	LCH-008 XPE 6300K min R2	57	–
548376	LCH-008 XPE 6300K min R2	57	–
548378	LCH-008 XPE 6300K min R2	57	–
548380	LCH-008 XPE 6300K min R2	57	–
548381	WU-M-431-2700K	26	14a
548382	WU-M-431-3000K	26	14a
548383	WU-M431-4000K	26	14a
548384	WU-M-432-2700K	26	14a
548385	WU-M-432-3000K	26	14a
548386	WU-M-432-4000K	26	14a
548418	LCH-009 XPE 3000K min Q3	57	–
548419	LCH-009 XPE 3000K min Q3	57	–
548424	LCH-009 XPE 3000K min Q3	57	–
548428	LCH-009 XPE 3000K min Q3	57	–
548429	LCH-009 XPE 4500K min Q4	57	–
548430	LCH-009 XPE 4500K min Q4	57	–
548432	LCH-009 XPE 4500K min Q4	57	–
548434	LCH-009 XPE 4500K min Q4	57	–
548435	LCH-009 XPE 6300K min R2	57	–
548436	LCH-009 XPE 6300K min R2	57	–
548438	LCH-009 XPE 6300K min R2	57	–
548440	LCH-009 XPE 6300K min R2	57	–
548504	WU-M-438CW	29	–
548505	WU-M-438-NW	29	–
548506	WU-M-438WW	29	–
548518	WU-M-440-RGB	63	–
548519	WU-M-440-NW	63	–
548520	WU-M-440-WW	63	–
548521	WU-M-441-RGB	63	–
548522	WU-M-441-NW	63	–

1 ENEC
1a applied
3 cULus
5 CSV
7
13 KEMA KEUR
13a KEMA EMC
14 VDE
14a applied
15 VDE
17
19
25
28 VDE EMV
31 IRAM
32 SABS
33 CQC
34 cETLus
35 cETL RECOGNIZED COMPONENT US

Ref. No.	Type	Page	Approval
548523	WU-M-441-WW	63	–
548524	WU-M-442-RGB	63	–
548525	WU-M-442-NW	63	–
548526	WU-M-442-WW	63	–
548566	WU-M-438-CW	29	–
548567	WU-M-438-NW	29	–
548568	WU-M-438-WW	29	–
548721	JD 2000II.67	129	–
548728	WU-M-438-6KLM	31	–
548729	WU-M-438-6KLM	31	–
548730	WU-M-438-6KLM	31	–
548731	WU-M-438-10KLM	31	–
548732	WU-M-438-10KLM	31	–
548733	WU-M-438-10KLM	31	–
548739	Heat sink	45	–
548769	LCH-006 XPE 3000K min Q3	59	–
548770	LCH-006 XPE 3000K min Q3	59	–
548772	LCH-006 XPE 3000K min Q3	59	–
548774	LCH-006 XPE 3000K min Q3	59	–
548775	LCH-006 XPE 6300K min R2	59	–
548776	LCH-006 XPE 6300K min R2	59	–
548778	LCH-006 XPE 6300K min R2	59	–
548780	LCH-006 XPE 6300K min R2	59	–
548781	Reflector	45	–
548782	LCH-006 XPE 3000K min Q3	59	–
548783	LCH-006 XPE 3000K min Q3	59	–
548785	LCH-006 XPE 3000K min Q3	59	–
548787	LCH-006 XPE 3000K min Q3	59	–
548788	LCH-006 XPE 6300K min R2	59	–
548789	LCH-006 XPE 6300K min R2	59	–
548791	LCH-006 XPE 6300K min R2	59	–
548793	LCH-006 XPE 6300K min R2	59	–
548794	LCH-007 XPE 3000K min Q3	59	–
548795	LCH-007 XPE 3000K min Q3	59	–
548797	LCH-007 XPE 3000K min Q3	59	–
548799	LCH-007 XPE 3000K min Q3	59	–
548800	LCH-007 XPE 6300K min R2	59	–
548801	LCH-007 XPE 6300K min R2	59	–
548803	LCH-007 XPE 6300K min R2	59	–
548805	LCH-007 XPE 6300K min R2	59	–
548806	LCH-007 XPE 3000K min Q3	59	–
548807	LCH-007 XPE 3000K min Q3	59	–
548809	LCH-007 XPE 3000K min Q3	59	–
548811	LCH-007 XPE 3000K min Q3	59	–
548812	LCH-007 XPE 6300K min R2	59	–
548813	LCH-007 XPE 6300K min R2	59	–
548815	LCH-007 XPE 6300K min R2	59	–
548817	LCH-007 XPE 6300K min R2	59	–
548826	WU-M-437-2700K	27	–
548827	WU-M-437-3000K	27	–
548828	WU-M-437-4000K	27	–
548863	LR4W XPE 4000K min Q2	39	–
548864	LR4W XPE 4000K min Q2	39	–
548868	PowerOptics3	42	–
548869	PowerOptics3	42	–
548870	PowerOptics3	42	–
548871	PowerOptics3	42	–
548872	LR3W XPE 3000K min P4	35	–
548873	LR3W XPE 3000K min P4	35	–
548874	LR3W XPE 3000K min P4	35	–
548875	LR3W XPE 3000K min P4	35	–
548876	LR3W XPE 4000K min Q2	35	–
548877	LR3W XPE 4000K min Q2	35	–
548878	LR3W XPE 4000K min Q2	35	–
548879	LR3W XPE 4000K min Q2	35	–
548880	LR3W XPE 6300K min Q4	35	–
548881	LR3W XPE 6300K min Q4	35	–
548882	LR3W XPE 6300K min Q4	35	–
548883	LR3W XPE 6300K min Q4	35	–
548886	LCH-004 XPE 3000K min Q3	56	–

Ref. No.	Type	Page	Approval
548887	LCH-004 XPE 3000K min Q3	56	–
548888	LCH-004 XPE 3000K min Q3	56	–
548889	LCH-004 XPE 3000K min Q3	56	–
548891	LCH-004 XPE 4500K min Q4	56	–
548892	LCH-004 XPE 4500K min Q4	56	–
548893	LCH-004 XPE 4500K min Q4	56	–
548894	LCH-004 XPE 6300K min R2	56	–
548895	LCH-004 XPE 6300K min R2	56	–
548896	LCH-004 XPE 6300K min R2	56	–
548897	LCH-004 XPE 6300K min R2	56	–
548898	LCH-002 XPE 3000K min Q3	56	–
548899	LCH-002 XPE 3000K min Q3	56	–
548900	LCH-002 XPE 3000K min Q3	56	–
548901	LCH-002 XPE 3000K min Q3	56	–
548902	LCH-002 XPE 4500K min Q4	56	–
548903	LCH-002 XPE 4500K min Q4	56	–
548904	LCH-002 XPE 4500K min Q4	56	–
548905	LCH-002 XPE 4500K min Q4	56	–
548906	LCH-002 XPE 6300K min R2	56	–
548907	LCH-002 XPE 6300K min R2	56	–
548908	LCH-002 XPE 6300K min R2	56	–
548909	LCH-002 XPE 6300K min R2	56	–
548912	LCH-002 XML 3000K min T6	56	–
548913	LCH-002 XML 3000K min T6	56	–
548914	LCH-002 XML 3000K min T6	56	–
548915	LCH-002 XML 3000K min T6	56	–
548916	LCH-002 XML 4000K min U2	56	–
548917	LCH-002 XML 4000K min U2	56	–
548918	LCH-002 XML 4000K min U2	56	–
548919	LCH-002 XML 4000K min U2	56	–
548920	LCH-004 XML 3000K min T6	56	–
548921	LCH-004 XML 3000K min T6	56	–
548922	LCH-004 XML 3000K min T6	56	–
548923	LCH-004 XML 3000K min T6	56	–
548924	LCH-004 XML 4000K min U2	56	–
548925	LCH-004 XML 4000K min U2	56	–
548926	LCH-004 XML 4000K min U2	56	–
548927	LCH-004 XML 4000K min U2	56	–
548929	LCH-008 XML 3000K min T6	57	–
548930	LCH-008 XML 3000K min T6	57	–
548931	LCH-008 XML 3000K min T6	57	–
548932	LCH-008 XML 4000K min U2	57	–
548933	LCH-008 XML 4000K min U2	57	–
548934	LCH-008 XML 4000K min U2	57	–
548935	LCH-008 XML 4000K min U2	57	–
548936	LCH-009 XML 3000K min T6	57	–
548937	LCH-009 XML 3000K min T6	57	–
548938	LCH-009 XML 3000K min T6	57	–
548939	LCH-009 XML 3000K min T6	57	–
548940	LCH-009 XML 4000K min U2	57	–
548941	LCH-009 XML 4000K min U2	57	–
548942	LCH-009 XML 4000K min U2	57	–
548943	LCH-009 XML 4000K min U2	57	–
548944	LCH-006 XPE 4500K min Q4	59	–
548945	LCH-006 XPE 4500K min Q4	59	–
548946	LCH-006 XPE 4500K min Q4	59	–
548947	LCH-006 XPE 4500K min Q4	59	–
548948	LCH-006 XPE 4500K min Q4	59	–
548949	LCH-006 XPE 4500K min Q4	59	–
548950	LCH-006 XPE 4500K min Q4	59	–
548951	LCH-006 XPE 4500K min Q4	59	–
548952	LCH-007 XPE 4500K min Q4	59	–
548953	LCH-007 XPE 4500K min Q4	59	–
548954	LCH-007 XPE 4500K min Q4	59	–
548955	LCH-007 XPE 4500K min Q4	59	–
548956	LCH-007 XPE 4500K min Q4	59	–
548957	LCH-007 XPE 4500K min Q4	59	–
548958	LCH-007 XPE 4500K min Q4	59	–
548959	LCH-007 XPE 4500K min Q4	59	–
548960	LCH010 XPE 3000K min Q3	60	–

1 ENEC

1a applied

3 cULus

5 CSV

7

13 KEMA KEUR

13a KEMA EMC

14 VDE

14a applied

15 VDE

17

19

25

28 VDE EMV

31 IRAM

32 SABS

33 CQC

34 cULus

35 ETL RECOGNIZED COMPONENT US

Ref. No.	Type	Page	Approval
548961	LCH010 XPE 4500K min Q4	60	–
548962	LCH011 XPE 3000K min Q3	60	–
548963	LCH011 XPE 4500K min Q4	60	–
548964	LCH010 XPE 3000K min Q3	60	–
548965	LCH010 XPE 4500K min Q4	60	–
548966	LCH011 XPE 3000K min Q3	60	–
548967	LCH011 XPE 4500K min Q4	60	–
548970	LCH010 XML 3000K min T6	60	–
548971	LCH010 XML 4000K min U2	60	–
548972	LCH011 XML 3000K min T6	60	–
548973	LCH011 XML 4000K min U2	60	–
548974	LCH010 XML 3000K min T6	60	–
548975	LCH010 XML 4000K min U2	60	–
548976	LCH011 XML 3000K min T6	60	–
548977	LCH011 XML 4000K min U2	60	–
549056	WU-M-425-CW-LOWCRI	28	14a
549057	WU-M-425-CW-LOWCRI	28	14a
549145	WU-M-438-CW-LOWCRI	29	–
549146	WU-M-438-CW-LOWCRI	29	–
549258	DML62EL30/L 89300	21	–
549259	DML62EW/L 896300	21	–
549260	DML62EL30/L 89301	21	–
549261	DML62EW/L 89301	21	–
549262	DML62EL30/L 89302	21	–
549263	DML62EW/L 89302	21	–
549828	LCH-008 XML 3000K min T6	57	–

1 ENEC
1a applied
3
5
7
13
13a
14 VDE
14a applied
15
17
19
25
28
31
32
33
34
35

Subsidiaries	Address	Phone / Fax / Email
Vossloh-Schwabe Deutschland GmbH Germany, Benelux, Great Britain, Ireland, Austria, Switzerland, Scandinavia, Turkey	P.O. Box 28 69 D-58478 Lüdenscheid, Germany	Phone: +49/(0)2351/10 10 Fax: +49/(0)2351/10 12 17 info.vsv@vsv.vossloh-schwabe.com
Australia Vossloh-Schwabe Deutschland GmbH	Branch Office Sydney 3A Lenton Place North Rocks, N.S.W. 2151, Australia	Phone: +61/(0)2/88 43 07 00 Fax: +61/(0)2/88 43 07 77 sales-aus@vsaus.vossloh-schwabe.com
China Vossloh-Schwabe Electrical Appliances Trading (Shanghai) Co., Ltd.	Wiselogic International Center Room 1602, #66 North Shannxi Road Shanghai, P.C. 200041/China	Phone: +86/21/62 18 55 99 Fax: +86/21/62 67 07 81 sean.yang@vscn.vossloh-schwabe.com
East Europe Vossloh-Schwabe Deutschland GmbH	Sales Office East Europe Hadovka Office Park, Evropská 2589/33b 16000 Prague 6, Czech Republic	Phone: +420/2/35 31 22 88 Fax: +420/2/35 31 22 61 magdalena.ragauerova@vsv.vossloh-schwabe.com
France Vossloh-Schwabe France S.a.r.l.	ZI.-Nord 20, rue A. Kiener 68016 Colmar, France	Phone: +33/(0)389/20 12 12 Fax: +33/(0)389/24 18 65 vsf.ventes@vsf.vossloh-schwabe.com
Hong Kong Vossloh-Schwabe Hong Kong Ltd.	Flat A & B, 26/F., West Gate Tower 7 Wing Hong Street, Cheung Sha Wan Kowloon, Hong Kong	Phone: +852/28779688 Fax: +852/28779933 linda.li@vshk.vossloh-schwabe.com
Hungary Vossloh-Schwabe Deutschland GmbH	Sales Office Hungary Árpád utca 27 H-1161 Budapest, Hungary	Mobil: +36/30/298 43 00 Fax: +36/1/270 12 62 szabolcs.birtalan@vsv.vossloh-schwabe.com
Italy, Greece Vossloh-Schwabe Italia S.p.A.	Via Strada S. Martino 15 47027 Sarsina/Forlí, Italy	Phone: +39/0547/9 81 11 Fax: +39/0547/9 82 60 vs-i@vsi.vossloh-schwabe.com
Korea Vossloh-Schwabe Korea	#602 Olympia Center Building 828-10, Yeoksam-Dong, Gangnam-Gu Seoul 135-935, Korea	Phone: +82/2/62 04 87 81/4 Fax: +82/2/62 04 87 85 borim.kim@vs.vossloh-schwabe.com
New Zealand Vossloh-Schwabe Deutschland GmbH	Branch Office Auckland Unit 2 / 54 Lady Ruby Drive East Tamaki, Auckland, New Zealand	Phone: +64/(0)9/265 11 10 Fax: +64/(0)9/265 11 20 sales-nz@vsnz.vossloh-schwabe.com
Poland, Baltic States Vossloh-Schwabe Deutschland GmbH	Sales Office Poland ul. Zaporoska 6/5 PL 30-389 Kraków, Poland	Phone: +48/(0)12/3 57 23 23 Fax: +48/(0)12/2 62 03 26 lukasz.niemczycki@vsv.vossloh-schwabe.com
Serbia, Bosnia-Herzegovina, Bulgaria, Kosovo, **Croatia, Macedonia, Montenegro, Slovenia** Vossloh-Schwabe Deutschland GmbH	Sales Office Belgrad/Serbia Danila Lekica 1 11000 Belgrade, Serbia	Phone: +381/63/286 330 Fax: +381/63/286 330 goran.stankovic@vsv.vossloh-schwabe.com
Singapore Vossloh-Schwabe Pte. Ltd.	Vertex, 33 Ubi Avenue 3 Lobby A #06-72 Singapore 408868	Phone: +65/62 75 75 33 Fax: +65/62 75 76 33 vssing@singnet.com.sg
South Africa Vossloh-Schwabe Deutschland GmbH	Branch Office Johannesburg 154, Lechwe Avenue, Corporate Park Midrand 1685, South Africa	Phone: +27/11/31 44 340 Fax: +27/11/31 45 287 barry.hall@vsaf.vossloh-schwabe.com
Spain, South America, Portugal Vossloh-Schwabe Ibérica, S.L.	Venezuela 105, 5° - A 08019 Barcelona, Spain	Phone: +34/93/481 70 70 Fax: +34/93/481 70 71 vs-e@vse.vossloh-schwabe.com
Taiwan Vossloh-Schwabe Pte. Ltd.	Taiwan Branch 9. Fl-2, No. 80 Sung Chiang Road, Taipei, Taiwan	Phone: +886/(0)2/25 68 36 22 Fax: +886/(0)2/25 68 36 20 betty.ho@vstw.vossloh-schwabe.com
Thailand Vossloh-Schwabe Trading Ltd.	3rd Floor (Unit 1) BUI Building 1 175-177 Soi Anumarnratchathon 1 Surawong Road, Kwaeng Suriyawongse Khet Bangrak, Bangkok 10500, Thailand	Phone: +66/(0)2/63 473 11 Fax: +66/(0)2/63 473 13 sales.vstt@vstt.vossloh-schwabe.com
Tunisia Vossloh-Schwabe Tunisie S.A.	Rue de l'énergie, BP. 299 Zone Industrielle de Ben Arous 2013 Tunis, Tunisia	Phone: +216/1/38 49 00 Fax: +216/71/38 49 90 vs.tunisie@gnet.tn
USA, Canada, Mexico Universal™ Lighting Technologies	26 Century Blvd. Nashville, TN 37214-3683, USA	Phone: +1/615/31 65 100 Fax: +1/615/31 65 205 oem_sales@unvlt.com

Distributors	Address	Phone / Fax / Email
Belgium Huppertz NV-SA	Golden Hope Straat 35b 1620 Drogenbos, Belgium	Phone: +32/2/344 34 34 Fax: +32/2/344 34 30 info@huppertz.de
Bulgaria HIT Ltd.	Vasil Levski Street, No 20 5139 Parvomaitsi, Bulgaria	Phone: +359/(0)618/64 909 Fax: +359/(0)618/64 929 m.zelenkov@hitlighting.com
Denmark Scanlouvers A/S	Syv Holmevej 3 4130 Viby Sj., Denmark	Phone: +45/4618/66 44 Fax: +45/4618/67 12 sales@scanlouvers.dk
Egypt Egyptian German Electrical Supplies Comp.	55, Al Gomhoria St. Azbakia, Cairo, Egypt	Phone: +202/2/58 800 22 Fax: +202/2/59 141 88
Germany Arnold Houben GmbH Distributor für den Elektro-Großhandel	An der Wachsfabrik 3a 50996 Cologne, Germany	Phone: +49/(0)2236/966 310 Fax: +49/(0)2236/966 319 info@houben.eu
Iran Sepehr Afrooz Saba Trading, Inc.	141 Amol Road Babol, Iran	Phone: +98/111/328 39 11 Fax: +98/111/328 39 24 info@sasti.net
Jordan Hassan Minwer Est. Jabal Al-Hussein	Salah Ad-deen Str. 164, 182 P.O. Box 182651 11118 Amman, Jordan	Phone: +962/6/46 46 666 Fax: +962/6/46 43 746 minwerlight@index.com.jo
Netherlands L. Michels Technische Handelsonderneming B.V.	Argonweg 15 1362 AA Almere Stad-West Netherlands	Phone: +31/36/53 650 55 Fax: +31/36/52 925 85 l.michels@michels-handel.nl
Norway Lyskomponenter AS	Sagmyra 2 A 4624 KristiansandBal, Norway	Phone: +47/38/003636 Fax: +47/23/501283 firmapost@lyskomponenter.no
Portugal Vabeldi-Comercio de Iluminação, Lda.	Empreendimento Urbiportral, Armazém 3 Zona Industrial da Abrunheira 2710-089 Sintra, Portugal	Phone: +351/21/91 511 75 Fax: +351/21/91 520 63 vabeldi@vabeldi.pt
Romania Patrascoiu Consulting SRL	Budila str., 12, ap. 4B4, Sector 2 02409 Bucharest, Romania	Mobile: +40/744278096 Phone/Fax: +40/21/6107437 silviu.patrascoiu@patrascoiu-consulting.ro
Russia Terna-Lainer	87, Dmitrovskoje Shosse 127238 Moscow, Russia	Phone: +7/(0)495/77 50 100 Fax: +7/(0)495/50 298 76 svet@zaolainer.ru
Saudi Arabia Ultra Light	P.O. Box 42005 11541 Riyadh, Saudi Arabia	Phone: +966/1/29 17 855 Fax: +966/1/29 13 597 ultralight@ultra-light.net
Sweden Candelux AB	Hamragårdsvägen 37 43951 Åsa, Sweden	Phone: +46/(0)31/70 600 70 Fax: +46/(0)31/70 600 72 info@candelux.se
Switzerland, Liechtenstein Max Hauri AG	Weidstrasse 16 9220 Bischofszell, Switzerland	Phone: +41/71/42 42 525 Fax: +41/71/42 42 590 info@maxhauri.ch
United Arab Emirates VS-Gulf FZCO	P.O. Box 17590 Jebel Ali Free Zone, Dubai, U.A.E.	Phone: +971/4/88 12 599 Fax: +971/4/88 12 170 sales@vsgulf.com

Whenever an electric light goes on around the world, Vossloh-Schwabe is likely to have made a key contribution to ensuring that everything works at the flick of a switch.

Headquartered in Germany, Vossloh-Schwabe has been a member of the global Panasonic group since 2002 and counts as a technology leader within the lighting sector. Top-quality, high-performance products form the basis of the company's success.

Whether cost-effective standard components or tailor-made product developments are needed, Vossloh-Schwabe can satisfy even the most diverse market and customer requirements. Vossloh-Schwabe's extensive product portfolio covers all lighting components: electronic and magnetic ballasts, lampholders, state-of-the-art control systems (LiCS), LED systems with matching control gear units as well as OLEDs.

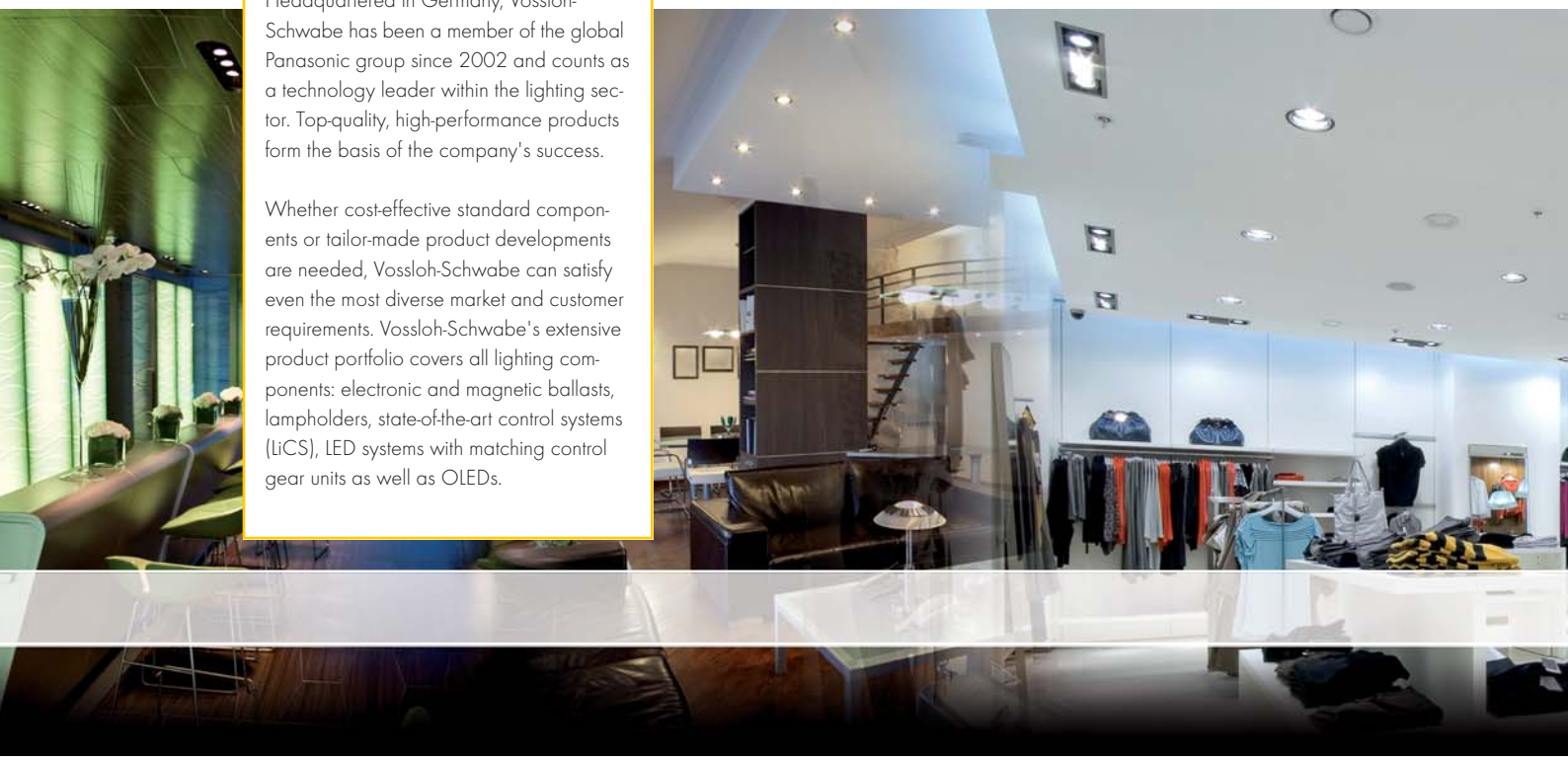

A member of the Panasonic group Panasonic

Vossloh-Schwabe Deutschland GmbH

Hohe Steinert 8 · 58509 Lüdenscheid · Germany
Phone +49/23 51/10 10 · Fax +49/23 51/10 12 17

www.vossloh-schwabe.com

VOSSLOH SCHWABE

All rights reserved © Vossloh-Schwabe
Photos: istockphoto.com; shutterstock.com
Specifications are subject to change without notice
VS Main Catalogue GB 2012