VOSSLOH SCHWABE



# Premier S

Bright Light, Shoppers' Delight

# PREMIER S

## A NEW GENERATION OF HI LAMPS



**TRIPLE-ENVELOPE TECHNOLOGY**
enclosed bulb prevents glass shards from falling out should the lamp shatter

**HIGHLY CONVENIENT MAINTENANCE AT LOW COST**
coverless design enables easy lamp replacement

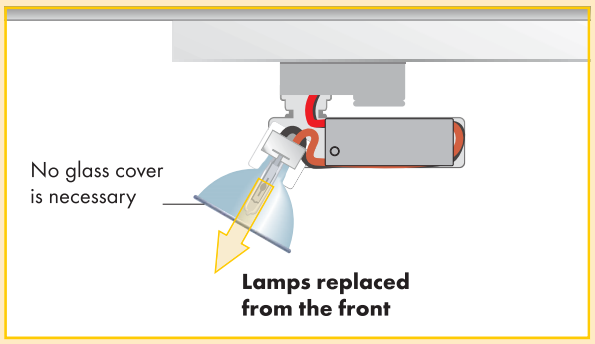


**MINIMAL DROP IN LUMINOUS FLUX**
results in long service life at nearly constant light quality

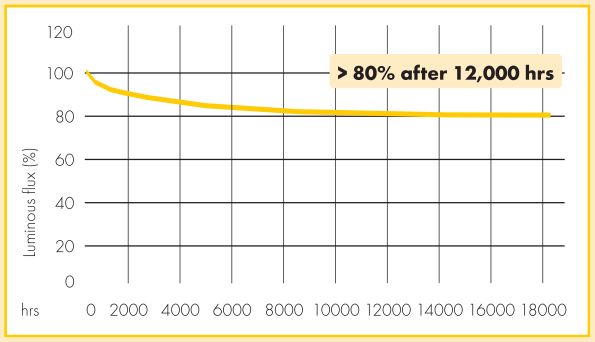


**HIGH CRI VALUE ($R_a$ 93 / $R_a$ 96)**
especially in the red spectral range

**HIGH DEGREE OF LUMINOUS EFFICIENCY (100 lm/W)**
due to perfectly matched system components

Ensuring the right kind of bright light is always key to creating a successful product display. Panasonic has now redefined the standard in retail lighting with its new 35 W and 70 W Premier S ceramic discharge lamps.

The lamp is characterised by an extremely high CRI value of more than $R_a$ 96, a high degree of luminous efficiency (100 lm/W) as well as near constant luminous flux (luminous flux = 80% at up to 12,000 operating hours).

The lamp's "triple envelope" technology removes the need to fit luminaires with a front cover since there is no danger of any glass shards falling out should the lamp shatter. Next to facilitating even slimmer luminaire designs, the enclosed bulb also increases ease of maintenance and cost-effectiveness since there is no need to remove or replace a glass cover when lamps are exchanged.

Photometric quality, cost-effectiveness, safety factors and ease of installation are all key criteria when it comes to luminaire design – and all of these criteria are fully satisfied by the Premier S lamp.







**We think in terms of systems**

As a fully owned subsidiary of the Panasonic Corporation, Vossloh-Schwabe offers much more than just 90 years of experience in the field of lighting technology. In our capacity as a systems provider, we also focus on combining ideally matched components with individual products to form a single functional unit.

In this vein, we therefore used the lamp itself as the starting point for designing the matching electronic ballast and the lampholder for the new GU8.5 base.

VS also attaches great importance to delivering systemised diversity. As a result, the electronic ballast fits into the same M3 (metal) and K34 (plastic) casings used for standard ballasts, which means the casing dimensions and mounting hole layout have remained unchanged.

At the same time, these electronic ballasts are also suitable for operating 35 W and 70 W metal halide lamps with a variety of bases (GU6.5, GU8.5 G8.5, G12, PG-12-2, RX7s and E27). Apart from featuring an improved ignition concept and temperature protection, the compact casing satisfies the demands of EEI9 A2, which already meets the EU's minimum requirements that will take effect in 2017.

The VS range is rounded off by lampholders made of high-quality materials (ceramics/LCP). The "twist and lock" bayonet fitting securely holds the lamp in place and ensures it is perfectly positioned within the reflector. This result in particularly narrow tolerances with regard to light distribution.

The mounting hole layout and burner positions were again chosen to enable problem-free use as a replacement for lamps with a G12 base.

**System advantages**

**ALL UNDER ONE ROOF**
concerted competence results in exceptional system synergies

**FIVE YEARS WARRANTY ON ALL VS PRODUCTS**
in line with our 5-year product warranty

**90 YEARS OF EXPERIENCE IN LIGHTING TECHNOLOGY**
integrated in-house production facilities guarantee superior quality



# PREMIER S

## LAMP DATA



**35 W or 70 W Premier S lamp**




**Premier S Metal Halide Lamps**

35 W and 70 W ceramic discharge lamps for open and closed luminaires
Colour temperature: warm white (3000 K)
or cool white (4200 K)
Colour rendering level: 1A
Lamp base: "twist & lock" GU8.5 base
Operation only with suitable electronic ballasts
UV filter technology

**PREMIER S 35 W**

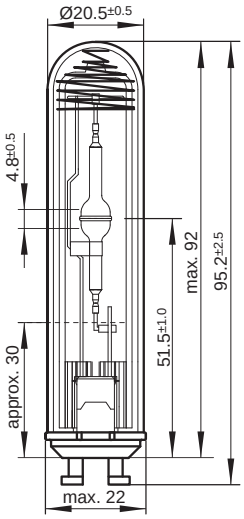


**PREMIER S 70 W**

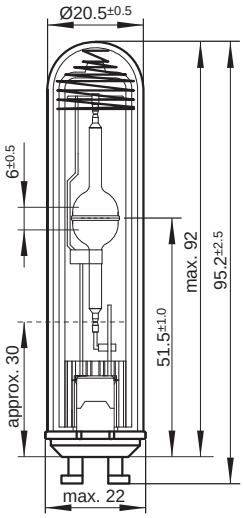

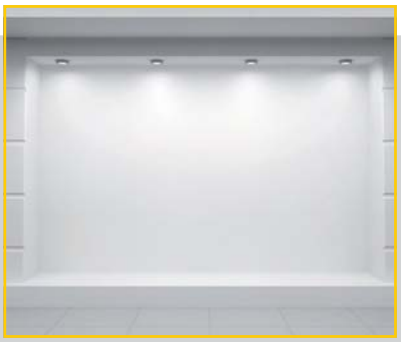



**Lampholders for the new HI Premier S lamp with a GU8.5 base**

## PREMIER S 35 W

| | | CPS 35W 3000K | CPS 35W 4200K |
|---|---|---|---|
| **Ref. No.** | | **546075** | **546076** |
| Nominal output | W | 35 | 35 |
| Output consumption | W | 39 | 39 |
| Luminous flux | lm | 3300 | 3300 |
| Luminous efficacy | lm/W | 85 | 85 |
| Colour temperature | K | 3000 (warm white) | 4200 (cool white) |
| Colour rendering index | $R_a$ | 93 | 96 |
| Lumen maintenance | % | > 80@12,000 h | > 80@12,000 h |
| Survival lamp life | h | 15,000 | 15,000 |
| Burning position | | free | free |
| Base | | GU8.5 | GU8.5 |

## PREMIER S 70 W

| | | CPS 70W 3000K | CPS 70W 4200K |
|---|---|---|---|
| **Ref. No.** | | **546077** | **546078** |
| Nominal output | W | 70 | 70 |
| Output consumption | W | 73 | 73 |
| Luminous flux | lm | 7300 | 7300 |
| Luminous efficacy | lm/W | 100 | 100 |
| Colour temperature | K | 3000 (warm white) | 4200 (cool white) |
| Colour rendering index | Ra | 93 | 96 |
| Lumen maintenance | % | > 80@12,000 h | > 82@12,000 h |
| Survival lamp life | h | 15,000 | 18,000 |
| Burning position | | free | free |
| Base | | GU8.5 | GU8.5 |

## Lampholders for discharge lamps with base GU8.5

Casing: ceramic, cover plate: LCP, T250
Nominal rating: 2/250/5 kV
Multipoint contacts: CuZn/CrNi
Leads: Cu tinned, stranded conductors 1 $mm^2$,
Si-insulation, length: 300 mm

Type: 34700
Fixing holes for screws M3

**REF. NO.: 544895**

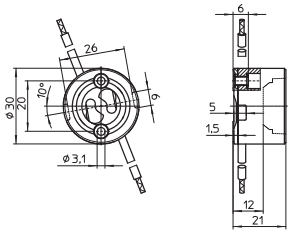


Type: 34730
Identical mounting hole layout and burning position
of G12 lampholders offer an effortless interchangeability of both lamp technologies
Fixing holes for screws M3

**REF. NO.: 546161**

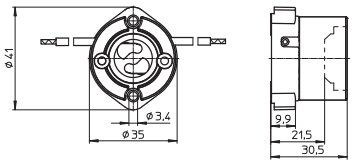

# COMPACT EBs

## TECHNICAL DATA



**Electronic ballasts for 35 W and 70 W HI lamps**



**Electronic ballasts for HI lamps 35 and 70 W**

**M3 / K34**
Casing: aluminium (M3) or
heat-resistant polycarbonate (K34)
Power factor: ≥ 0.95
Ignition voltage: max. 5 kV
Operation frequency: 173 Hz
Push-in terminals with push-button: 0.75–2.5 $mm^2$
Total harmonic distorsion: < 10%
Temperature protection
Constant power consumption
Protection against "no load" operation
For luminaires of protection class I (metal casing)
For luminaires of protection class I and II (plastic casing)
Degree of protection: IP20
Permissible load capacity: 20–120 pF
RFI-suppressed
Fixing brackets for screws M4 for base mounting
No flickering of defective lamps

**M3 EffectLine**
Casing: heat-resistant polycarbonate
Power factor: ≥ 0.95
Ignition voltage: max. 5 kV
Operation frequency: 173 Hz
Push-in terminals with push-button: 0.5–1.5 $mm^2$
Total harmonic distortion: < 10%
Temperature protection
Constant power consumption
Protection against "no load" operation
For luminaires of protection class I and II
Degree of protection: IP20
Permissible load capacity: 20–120 pF
RFI-suppressed
Life-time at $t_{c\ max.}$ = 30,000 hrs
Fixing brackets for screws M4
for base mounting





| Lamp | | | | Electronic ballast | | | | | | | | System |
|---|---|---|---|---|---|---|---|---|---|---|---|---|
| Nominal output W | Type | Base | Power consumption W | Type | **Ref. No.** | Voltage AC 50, 60 Hz V ±10% | Mains current A | Energy efficiency | Ambient temperature $t_a$ (°C) | Casing temperature $t_c$ (°C) | Weight g | Output W |
| **M3 – Electronic built-in ballast (with cap)** | | | | | | | | | | | | |
| 35 | HI | GU6.5, G8.5, GU8.5, GX8.5, G12, E27 | 1 x 39 | EHXc 35.325 | **183033** | 220 - 240 | 0,20 - 0,18 | A2 | - 20 to 65 | max. 80 | 220 | 43 |
| 70 | HI | G8.5, GU8.5, GX8.5, G12, PG12-2, E27, RX7s | 1 x 73 | EHXc 70.326 | **183036** | 220 - 240 | 0,36 - 0,34 | A2 | - 20 to 55 | max. 80 | 220 | 80 |
| **M3 PCB – Electronic built-in ballasts (without cap)** | | | | | | | | | | | | |
| 35 | HI | GU6.5, G8.5, GU8.5, GX8.5, G12, E27 | 1 x 39 | EHXc 35.325 | **183034** | 220 - 240 | 0,20 - 0,18 | A2 | - 20 to 65 | max. 80 | 180 | 43 |
| 70 | HI | G8.5, GU8.5, GX8.5, G12, PG12-2, E27, RX7s | 1 x 73 | EHXc 70.326 | **183037** | 220 - 240 | 0,36 - 0,34 | A2 | - 20 to 55 | max. 80 | 180 | 80 |
| **K34 – Independent electronic ballasts** | | | | | | | | | | | | |
| 35 | HI | GU6.5, G8.5, GU8.5, GX8.5, G12, E27 | 1 x 39 | EHXc 35.325 | **183035** | 220 - 240 | 0,20 - 0,18 | A2 | - 20 to 65 | max. 75 | 260 | 43 |
| 70 | HI | G8.5, GU8.5, GX8.5, G12, PG12-2, E27, RX7s | 1 x 73 | EHXc 70.326 | **183038** | 220 - 240 | 0,36 - 0,34 | A2 | - 20 to 55 | max. 75 | 260 | 80 |
| **M3 EffectLine – Electronic built-in ballasts** | | | | | | | | | | | | |
| 35 | HI | GU6.5, G8.5, GU8.5, GX8.5, G12, E27 | 1 x 39 | EHXe 35.356 | **183026** | 220 - 240 | 0.20 - 0.18 | A2 | - 15 to 65 | max. 80 | 220 | 43 |
| 70 | HI | G8.5, GU8.5, GX8.5, G12, PG12-2, E27, RX7s | 1 x 73 | EHXe 70.357 | **183027** | 220 - 240 | 0.36 - 0.34 | A2 | - 15 to 50 | max. 80 | 220 | 80 |

## M3 – BUILT-IN BALLAST

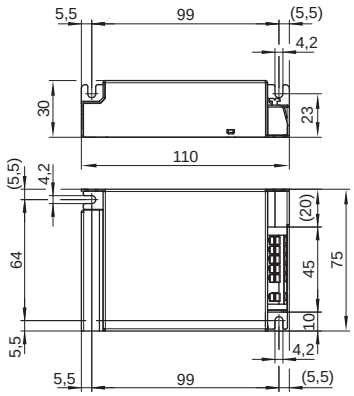


## K34 – INDEPENDENT BALLAST

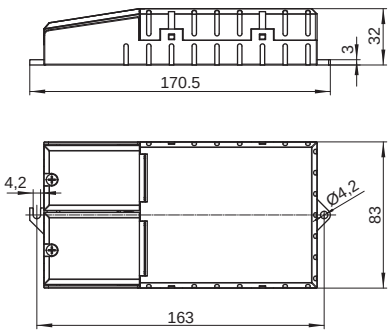


## M3 EFFECTLINE

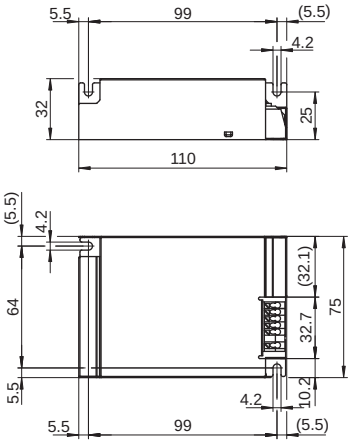


## M3 – BUILT-IN PCB

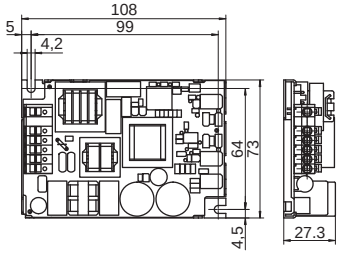

Whenever an electric light goes on around the world, Vossloh-Schwabe is likely to have made a key contribution to ensuring that everything works at the flick of a switch.

Headquartered in Germany, Vossloh-Schwabe has been a member of the global Panasonic group since 2002 and counts as a technology leader within the lighting sector. Top-quality, high-performance products form the basis of the company's success.

Whether cost-effective standard components or tailor-made product developments are needed, Vossloh-Schwabe can satisfy even the most diverse market and customer requirements. Vossloh-Schwabe's extensive product portfolio covers all lighting components: electronic and magnetic ballasts, lampholders, state-of-the-art control systems (LiCS), LED systems with matching control gear units as well as OLEDs.



A member of the Panasonic group Panasonic

**Vossloh-Schwabe Deutschland GmbH**

Hohe Steinert 8 · 58509 Lüdenscheid · Germany
Phone +49/23 51/10 10 · Fax +49/23 51/10 12 17

**www.vossloh-schwabe.com**

VOSSLOH SCHWABE

All rights reserved © Vossloh-Schwabe
Photos: istock.com
Specifications are subject to change without notice
Premier S GB 03/2012