A New Lighting Experience







System Components for High-Pressure Discharge Lamps

Magnetic Ballasts
Compensation Capacitors
Lampholders
Ignitors

System Components for High-Pressure Discharge Lamps

Contents

1	Discharge Lamps	4
2	Life Time and Rectifier Effect of High-Pressure Discharge Lamps	6
3	Magnetic Ballasts for High-Pressure Discharge Lamps	7
3.1	Functional principle of magnetic ballasts	7
3.2	Insulation system and life time of magnetic ballasts	8
3.3	Avoiding excessive temperatures in luminaires with magnetic ballasts featuring thermal cut-outs	8
3.4	Selection criteria for magnetic ballasts for high-pressure discharge lamps	10
4	Compensation Capacitors for High-Pressure Discharge Lamp Circuits	11
4.1	Capacitors with an automatic switch-off – Type B capacitors in acc. with IEC 61048	11
4.2	Capacitors without an automatic switch-off – Type A capacitors in acc. with IEC 61048	12
4.3	Selection criteria for compensation capacitors	12
5	Lampholders for High-Pressure Discharge Lamps	14
6	Ignitors for High-Pressure Discharge Lamps	15
6.1	Superimposed ignition system	16
6.1.1	Power flashing	17
6.2	Pulse ignition system	18
6.3	Fault conditions by ageing high-pressure discharge lamps	19
6.4	Advantages of VS ignitors with automatic switch-off	19
7	VS Ignitor Range	20
7.1	Overview of VS Superimposed Ignitors	21
7.1.1	Standard superimposed ignitors	21
7.1.2	Electronic superimposed ignitors with automatic switch-off – Series A	21
7.1.3	Digital superimposed ignitors with IPP technology and extended switch-off – Series D	22
7.1.4	Technical specifications of VS superimposed ignitors	25
7.1.5	Circuit diagrams for superimposed ignitors	26
7.2	Overview VS Pulse Ignitors	27
7.2.1	Standard pulse ignitors	27
7.2.2	Pulse ignitors with automatic switch-off – Series A	27
7.2.3	Pulse ignitors with pulse-pause mode – Series P	27
7.2.4	Technical specifications of VS ignitors	28
7.2.5	Circuit diagrams for pulse ignitors	29
8	Standards	29
9	Reference Numbers of VS Ignitors	30



Lighting quality, life time and availability of high-pressure discharge lamp systems are decisively influenced by the components used. New lamps with improved photometric and energy efficiency properties have led to increased and more widespread use of such systems. The choice of components has consequently become more important.

Next to providing an overview of the operational characteristics of components that are required for high-pressure discharge lamps in combination with magnetic ballasts, this brochure sets out criteria for selecting such components in line with luminaire requirements and design features.

The main emphasis of the brochure is on ignitors, a field in which decisive developments have recently been made that have created a corresponding need for information.

1. Discharge Lamps

Discharge lamps are extremely cost-effective due to their long life time and high light output. Various designs with differing light colours and numerous lamp ratings are available to suit all practical applications. Lamps are designed to suit their intended use in all kinds of luminaires and their construction features. Apart from the photometric properties, particular attention has to be paid to the temperature balance within the luminaires. The maximum values specified by the lamp manufacturers therefore have to be observed to ensure safe long-term lamp operation. The different light colours are produced by various metal vapours and / or gas blends in the burner or by special luminescent materials.

Apart from the photometric properties, particular attention has to be paid to the temperature balance within the luminaires.

Depending on the operating pressure in the discharge tube (low- or high-pressure), lamps with specific radiation characteristics can be manufactured.

Key to the lamp designation system:

L for low-pressure
M for mercury
S for sodium
H for high-pressure
I for iodide
C for ceramic

Discharge lamps generate light as the current passes through ionised gases and metal vapour. Depending on the gas filling, visible light is directly radiated or UV radiation is converted into visible light by luminescent materials on the inside surface of the glass bulb. The operation of discharge lamps is dependent on starters or ignitors that provide the requisite ignition voltage in combination with a ballast to stabilise the lamp current during normal operation.

High-pressure discharge lamps with integrated ignitors are also available on the market, but these systems have failed to have much impact.

During normal operation with magnetic AC ballasts at 50 Hz or 60 Hz, discharge lamps briefly go out at the zero crossing of the lamp current and then re-ignite when the mains voltage increases after polarity reversal. This process, which can be demonstrated using an oscilloscope, is marked by the re-ignition peak of the lamp voltage and by brief dark phases of the light emission in each sinusoidal half-wave. These dark phases of the emitted light are generally not perceived by the human eye unless the lamp is illuminating rapidly turning objects, which are then perceived as being stationary or only turning slowly. This stroboscopic effect must be taken into consideration (industrial lighting).

Ballasts stabilise the lamp current during normal operation.

	Low-pressure Discharge	High-pressure Discharge
Operating Pressure	10^{-6}...10^{-5} bar	0,3...9 bar
Type of Spectrum	Line spectrum with only few individual lines, possibly also UV	Line spectrum, often with a continuous component, possibly also UV
Luminous efficiency of the discharge	Low	High
Re-ignition behaviour	Immediate re-ignition of a hot lamp is possible	Immediate re-ignition of a hot lamp is only possible with a special ignitor, a so-called immediate start ignitor
Dimensions of the discharge tube (or burner)	Large and long	Compact and short
Lamp types	• Fluorescent lamps (LM lamps) • Low-pressure sodium lamps (LS lamps)	• High-pressure mercury vapour lamps (HM lamps) • High-pressure sodium vapour lamps (HS lamps) • Metal halide lamps (HI lamps) • Ceramic discharge lamps (C-HI lamps)

Properties of low- and high-pressure discharge lamps

Magnetic ballasts cause a phase shift between the mains voltage and the current. This phase shift is described by the power factor λ, whose value usually ranges between 0.3 and 0.7 λ. As a result of the phase shift the ballast not only draws operating power, but also idle power from the mains, the latter of which lowers the effectiveness of the lighting. Utility companies therefore require the power factor to be increased to over 0.85 λ for systems of a certain size (usually upwards of 130 W per phase conductor). Compensation capacitors are required to compensate the idle power (increase of the power factor), whereby only parallel compensation is recommended for discharge lamps nowadays as it allows power factors of over 0.85 λ to be attained. The capacitance of the capacitor has to match the specifications of the ballast manufacturer (type plate or technical documentation).

Magnetic ballasts cause a phase shift between the mains voltage and the current consumed.

As a typical form of low-pressure discharge lamp, fluorescent lamps work with mercury vapour at low pressure. During normal operation the lamp current passes through the lamp electrodes – which are made of tungsten wire and coated with emitter material – and transports electrons into the discharge chamber. As the electrons collide with the mercury atoms, mercury electrons are thrown out of orbit and then emit energy in the form of UV radiation when they return to their original position. The UV radiation is converted into visible light by the fluorescent coating on the inside of the glass tube. The composition of the luminescent material determines the light colour of the emitted light. Fluorescent lamps are used for cost-effective lighting solutions with good colour rendition properties. Fluorescent lamps attain light output values of up to 100 lm / W and a life time of between 7,500 and 36,000 hours, depending on the type of ballast and ignition system used. The life time of fluorescent lamps is expressed in terms of their useful life, i.e. the point in time at which the lamp still produces 80% of its original illuminance.

Low-pressure sodium lamps also fall into the category of low-pressure discharge lamps and attain particularly high light output values of up to 200 lm / W. However, as they only produce monochromatic yellow light, these types of lamp are only suitable for illumination purposes with low colour rendition requirements.

Low-pressure sodium lamps are only suitable for illumination purposes with low colour rendition requirements.

High-pressure discharge lamps have gained great importance in the form of high-pressure sodium lamps and metal halide lamps. The colour rendition properties of metal halide lamps are on par with those of fluorescent lamps. However, metal halide lamps provide the advantage of smaller shapes with high luminous efficiency, which makes them particularly suitable for narrow light-guiding systems. Due to these properties, metal halide lamps are often used for stage and photographic lighting, but also for lighting shops and stadiums. With the introduction of smaller lamp wattages and shapes, these lamps have also found their way into hotels, banks and offices, etc.



In contrast to the temperature of barely 100°C that the gas reaches in a low-pressure discharge lamp, this value approaches several thousand degrees in a high-pressure discharge lamp. The discharge chamber has to be made of highly heat-resistant quartz glass or ceramic to withstand the burner temperature of approx. 800°C.

At the end of the life time of some high-pressure discharge lamps with an outer bulb (high-pressure sodium lamps, metal halide lamps), extremely rare circumstances can arise in which this outer glass bulb can shatter, thus releasing hot shards into the atmosphere and posing a fire hazard. For these applications, luminaires therefore have to feature an enclosed lamp to ensure any parts are contained should the bulb shatter.

A suitable reference to this lamp behaviour can be found in the sales documentation of and on the packaging used by lamp manufacturers. The symbols are in accordance with the luminaire standard IEC 60598, in line with which lamps that emit UV radiation or that could pose a risk if operated with a defective lamp also have to labelled as such.

Symbol	
	Lamps for sole use in enclosed luminaires
	Lamps that may not be connected to the mains if the lamp is defective
	Lamps that emit UV radiation; the luminaire design must be adapted to suit
	Lamps that are suitable for use with open luminaires



2. Life Time and Rectifier Effect of High-Pressure Discharge Lamps

The life time of high-pressure discharge lamps is not only shortened by the number of ignitions and the period of operation, but also by the frequency with which ignition pulses fail to safely ignite the lamp. The electrodes and the burner are subjected to the greatest loads during ignition and the start-up phase, both of which continuously age the lamp. This results in a reduction of light and finally the destruction of the electrodes at the end of their life time.

A characteristic end-of-life feature of high-pressure sodium lamps and metal halide lamps is an increase in operating voltage with increasing lamp operation. The lamp will go out if the re-ignition voltage value of the operating voltage is exceeded. This maximum operating voltage value is decisive when designing ballasts. Lamps with this excessive operating voltage are unable to ignite and have to be replaced.

Next to the continuous ageing process of high-pressure sodium and metal halide lamps, additional end-of-life effects can occur due to asymmetrical electrode erosion and in rare cases also unsealed parts of the burner, which are caused by aggressive substances being deposited on the burner wall. Both cases are marked by flickering light and reduced luminous flux. This type of lamp fault is referred to as the rectifier effect, as a result of which the resistance of the ballast is clearly lowered and the current rises within a half-wave of the mains voltage. Fig. 1 shows the lamp current of a lamp displaying the rectifier effect. In special cases, operation is only possible during a half-wave of the mains period (100% rectification). Lamps displaying the rectifier effect must be replaced immediately.

Lamps displaying the rectifier effect must be replaced immediately.

Lamps that can develop the described safety risk at the end of their life time are named by lamp manufacturers. To operate these lamps, a thermal cut-out therefore needs to be fitted to the luminaire.

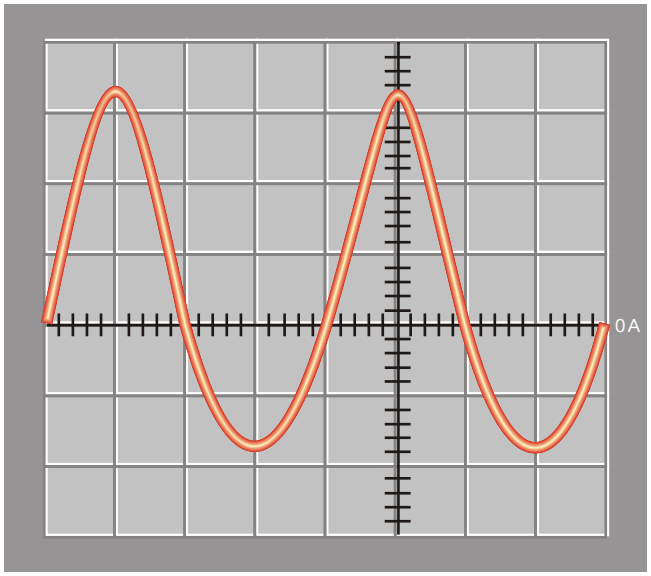

Fig. 1: Typical waveform of the current with a lamp displaying the rectifier effect.

3. Magnetic Ballasts for High-Pressure Discharge Lamps

Magnetic ballasts for high-pressure discharge lamps stabilise the operating point of a lamp, thereby influencing the system's wattage and luminous flux, its light output and life time as well as the colour temperature of the light. Magnetic ballasts are connected to the mains and are thus governed by the safety and EMC regulations of the countries in which they are used. Within the European Union, magnetic ballasts have to comply with EU Directives. For documentation purposes, manufacturers are obliged to label ballasts with the CE mark. The ENEC mark on the ballasts indicates that EU norms governing safety and performance have been fulfilled.

Magnetic ballasts for high-pressure discharge lamps stabilise the operating point of a lamp.

3.1 Functional principle of magnetic ballasts

The voltage needed to ignite a high-pressure discharge lamp is supplied by an ignitor in combination with a magnetic ballast. Once the lamp has been ignited, the ballast serves to limit the operating current. The ignition system used determines the way the ignition voltage pulses are generated. With superimposed systems, the necessary ignition voltage is generated by the ignitor itself, whereas with pulse systems the ignition voltage is jointly supplied by the ignitor and the ballast. Care must be taken to ensure the structure of the ballast (insulation) is suitable for such high voltages.

As the lamp current and lamp voltage values specified by lamp manufacturers for high-pressure sodium (HS) and metal halide lamps (HI) are usually identical given the same lamp wattage and the required impedances for the ballast are also the same, it is often possible to use the same ballasts for both types of lamp. It should be noted that HI lamps are susceptible to colour changes if the impedance value deviates from the nominal value. For that reason Vossloh-Schwabe ensures all ballasts comply with the narrower tolerances of these lamps.

In addition, the maximum DC value must be observed for HI lamps. The maximum starting current is specified for HS lamps instead of the maximum DC value.

3.2 Insulation system and life time of magnetic ballasts

The life time of magnetic ballasts is dependent on the insulation system used and the temperature load during application. The insulation system used by VS for magnetic ballasts for high-pressure discharge lamps enables a winding temperature (tw) of 130°C inside the luminaire without impairing the specified life time. For testing purposes, the insulation system is operated in a heating chamber at 222°C for a period of 30 days, after which time the lamp has to start safely without the insulation system displaying a fault. This brief life time test is based on the law developed by the American Montsinger.

VS ballasts for high-pressure discharge lamps are suitable for a winding temperature (tw) of 130°C.

Special ballasts with double insulation that comply with the latest European standards are available for use with Protection Class II luminaires. Apart from the ballasts' double insulation, particular attention was paid to re-dimensioning the creepage and air clearance distances in order to satisfy the safety requirements.

Keeping the winding temperature below the maximum tw value will increase the ballast's life time and lower its failure rate.

If the maximum value for the winding temperature in the luminaire is observed, the ballast can be expected to operate for 10 years. In this time, a failure rate of = 0.4% per 1,000 hours can be expected. However, keeping the winding temperature below the maximum tw value will increase the ballast's life time and lower its failure rate.

3.3 Avoiding excessive temperatures in luminaires with magnetic ballasts featuring thermal cut-outs

The rectifier effect, which can occur as a result of asymmetrical electrode erosion and unsealed parts of the burner (with lamps featuring an outer bulb), causes an increase in current through the magnetic ballast as its resistance to undulatory current (direct and alternating current) decreases. A marked deviation from the sinusoidal shape of a half-wave is a measure of the ballast's degree of saturation. Although this can constitute a quasi-stable state for a long period of time, this undulatory current overloads all luminaire parts (lampholders, cables, ballasts, ignitors) through which it flows. Care must therefore be taken to exchange lamps in good time. This direct current is subject to great amperage variation and often cannot be differentiated from alternating current. Safety and excess-current fuses are unsuitable for guaranteeing safe selection of the type of current. As a result, luminaires with lamps that can cause this effect must be fitted with thermal protection.

The standards governing luminaires also include appropriate test circuits for testing luminaires operated with magnetic ballasts. Figs. 2 and 3 show these test circuits, which include a rheostat for regulating the current.

The safe prevention of excessively high temperatures must be guaranteed in accordance with the luminaire standard IEC 60598-1, "Luminaires; Part 1: General Requirements and Tests".



As a cost-effective alternative to additionally fitting a separate thermal cut-out, Vossloh-Schwabe provides magnetic ballasts with integrated thermal protection that ensure the luminaire does not overheat. An intelligent thermal cut-out is used for lamp wattages of up to 150 W that measures both the ballast's temperature and the current flowing through its winding. For low-wattage lamps in particular this patented solution guarantees that the current is interrupted before the winding has time to heat up. Current selection is unnecessary for lamps over 150 W as the higher currents guarantee effective utilisation of the generated heat.

Magnetic ballasts with an integrated thermal cut-out guarantee that the luminaire does not overheat.

The thermal cut-outs feature an automatic reset function, which means that the cut-out returns to its original position after disconnection from the mains and its cooling down period has elapsed. This ensures the lamp circuit is ready for use again after exchanging a defective lamp.

Using a 70 W lamp as an example, the current would be cut off upon exceeding the nominal operating current according to the following criteria:

- 2 x operating current: 30 minutes
- 3 x operating current: 1 minute
- 4 x operating current: < 30 seconds

These cut out times are influenced by the winding temperature, which means that higher values result in the current being cut off more quickly. VS ballasts with intelligent thermal cut-outs have been developed and approved in accordance with IEC 61347-2-9 and bear the ENEC mark of the VDE-PZI for safety and performance. In line with this standard, the maximum winding temperature of tw +5 K must not yet lead to the cut-out being triggered. The temperatures at which the thermal cut-outs are activated are selected and determined in line with the design features of the ballasts.

This standard can also require disclosure of the highest ballast surface temperature upon activation of the thermal cut-out. This value can be found as a temperature value contained in a triangle on the ballast's label, but is rare for magnetic ballasts. Apart from the trigger mechanism for the thermal cut-out, the winding temperature of the ballast within the luminaire also has to be tested as different values can be attained. The winding temperature (e.g. tw = 130°C) must not be exceeded if the ballast is to reach its full life time.

The winding temperature must not be exceeded if the ballast is to reach its full life time.

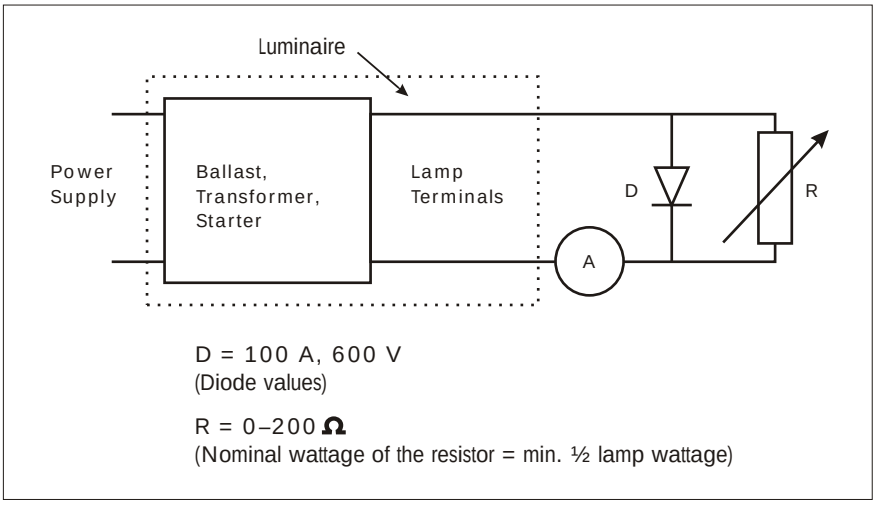

Fig. 2: Circuit diagram for testing the rectifier effect of certain high-pressure sodium and metal halide lamps

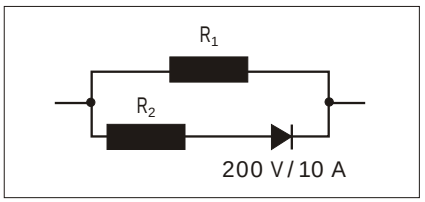

Fig. 3: Alternative circuit for simulating lamps with the rectifier effect for testing metal halide luminaires

Experience has shown that tests conducted with the circuit shown in Fig. 2 yield superior results to those conducted in line with the circuit shown in Fig. 3.

3.4 Selection criteria for magnetic ballasts for high-pressure discharge lamps

VS provides a broad range of ballasts for various mains voltages, mains frequencies of 50 Hz and 60 Hz as well as differing degrees of self-heating to suit various luminaire designs and applications. The range also includes ballasts with variable voltage tapping points and ballasts for connecting two lamps of different wattages. The product spectrum is further complemented by encapsulated ballasts and control gear units that can be used as independent ballasts.

Ballasts that can be used to operate two lamps of different wattages (e.g. 50 W/80 W) can also be used with power switches.

Voltage tapping points ensure a ballast can be precisely adjusted to the prescribed mains voltage. This in turn allows the lamp to attain its optimum light colour and life time. Ballasts that can be used to operate two lamps of different wattages (e.g. 50 W / 80 W) can also be used with power switches.

The winding temperature (tw) of a magnetic ballast is dependent on two parameters during application, namely the ambient temperature and the degree of self-heating due to inherent losses. The Δt value during normal operation is a measure of the inherent losses. This value can be found on the ballast label or in the technical specifications. The Δt value of a ballast must be selected to suit the temperature behaviour of the luminaire. The tw value specified on a ballast's label and in its technical specifications must not be exceeded inside the luminaire if it and the luminaire are to operate safely and attain their full life times. Exceeding the specified tw value by just 10°C cuts the life time by half (Montsinger law). The tw value is checked by measuring the temperature of the winding via the change in resistance of the copper wire in the ballast.

Vossloh-Schwabe develops ballasts according to IEC lamp data and the specific requirements of the lamp manufacturers. In a similar manner, consideration is taken of the latest developments with regard to the materials used. In this respect, VS attaches particular importance to meeting the narrow tolerances of ballast impedance values. This is a decisive advantage for optimising the light output, light colour and life time of high-pressure discharge lamps and is the result of every ballast being individually adjusted during the automated production and testing process. In addition, the power loss of a ballast has to be kept within narrow tolerances if the temperature behaviour of the luminaires is to be correspondingly stable.

VS develops ballasts in accordance with IEC lamp data and the specific requirements of the lamp manufacturers.

Apart from the electrical and thermal values, a ballast's dimensions are one of the main selection criteria. The VS range covers the following dimensions:

- 53 x 66 mm
  Fixing dimensions: 80 mm, 108 mm, 112 mm, 117 mm, 145 mm, 153 mm and 180 mm
- 92 x 102 mm
  Fixing dimensions: 133 mm, 148 mm, 163 mm, 173 mm, 203 mm and 248 mm
- 118 x 139 mm
  Fixing dimensions: 190 mm, 210 mm and 240 mm

Encapsulated ballasts are available with the following dimensions:

- 61 x 74 mm
  Fixing dimensions: 96 mm, 116 mm and 120 mm)
- 66 x 78 mm
  Fixing dimensions: 151,5 mm, 170,5 mm, 180,5 mm and 202,5 mm
- 100 x 113 mm
  Fixing dimensions: 120 mm and 135 mm
- 135 x 155 mm
  Fixing dimensions: 141 mm, 161 mm, 191 mm and 277 mm

Technical details regarding magnetic ballasts for high-pressure discharge lamps can be found in the main VS catalogue.

4. Compensation Capacitors for High-Pressure Discharge Lamp Circuits

MPP parallel capacitors are used for high-pressure discharge lamps.

Compensation capacitors are designed to compensate the inductive blind current of discharge lamp systems powered with mains frequencies of 50 Hz and 60 Hz. Parallel MPP capacitors (metallised plastic polypropylene) are used for high-pressure discharge lamps. Compensation capacitors help to increase the power factor to values over 0.85 λ as required by power supply companies.

VS MPP capacitors contain a low-loss dielectric polypropylene foil. Zinc and aluminium or pure aluminium vapour is vacuum-deposited directly on one side of this foil. As the contacts at either end of the capacitor winding feature a sprayed metal coating, they are suitable for high current loads and enable low-induction wiring between the contacts and the winding.

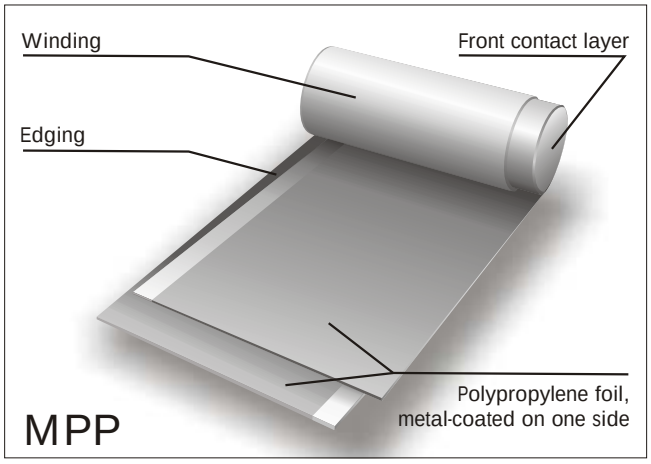

Fig. 4: Structure of an MPP capacitor

Capacitors with a nominal voltage of 280 V or more are filled with oil or resin once the winding has been inserted in the capacitor casing. This protects the winding from the environment and reduces partial discharges, thus ensuring both a long life time and stable capacitance values. Partial discharge effects are of lesser importance with capacitors operated with a nominal voltage of under 280 V so that these are generally not filled with oil or resin.

Filled capacitors of under 280 V are used for critical ambient conditions. All VS MPP capacitors are completely PCB-free (polychlorinated biphenyls).

All VS MPP capacitors are completely PCB-free.

VS MPP capacitors contain a self-healing dielectric foil. In the event of a short-circuit (dielectric breakdown in the winding), the metal deposits around the disruptive breakdown point vaporise due to the high temperature of the brief arc of light that is created. Within the space of just a few microseconds the metal vapour is displaced from the centre of the breakdown due to the excess pressure created during the dielectric breakdown. This creates an uncoated zone around the breakdown point that completely isolates it. The capacitor remains fully functional during and after the breakdown.

The self-healing ability of the capacitor can decrease with time and if operated under constant overload conditions. As a result, the risk of a non-healing dielectric breakdown with continuing short-circuit can arise. Therefore, a self-healing capacitor must not be confused with a fail-safe device.

Compensation capacitors fall into two type families (A and B) according to IEC 61048 (original wording):

- Type A Capacitors
  "Self-healing parallel capacitor not necessarily including an interrupter device"
- Type B Capacitors
  "Self-healing capacitor used in series lighting circuits or self-healing parallel capacitor, containing an interrupter device"

4.1 Capacitors with an automatic switch-off, Type B capacitors in accordance with IEC 61048

Self-healing capacitors do not require short-circuit protection as they are self-repairing after a breakdown in the dielectric foil. However, excess pressure can develop in the capacitor in the event of voltage overloads or at the end of its life time due to frequent breakdowns.

To prevent the casing from exploding, the hermetically sealed capacitors are fitted with a contact breaker in accordance with EN 61048; A2 (Type B Capacitors). Excess pressure in the capacitor opens out a concertina section causing the casing to expand lengthways. This results in the contacts rupturing at a predetermined breaking point, which irreversibly interrupts the current to the capacitor winding. This type of secured capacitor with an automatic switch-off is still often referred to as a flame- and explosion-proof capacitor with a break-action mechanism.

To prevent the casing from bursting, the hermetically sealed capacitors are fitted with a contact breaker.

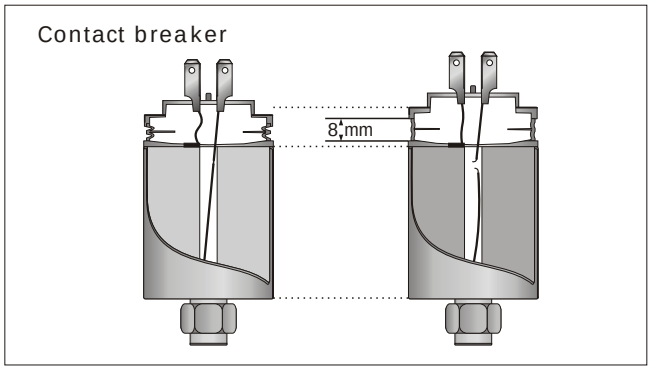

Fig. 5: Contact breaker

4.2 Capacitors without an automatic switch-off, Type A Capacitors in accordance with IEC 61048

Type A capacitors are also self-healing and require no short-circuit protection. However, in contrast to Type B capacitors, Type A capacitors are not fitted with a specific fail-safe mechanism as prescribed by the standards for Type B capacitors. The requirements laid down in the standard for Type A capacitors (special temperature and life time tests) are designed to ensure a sufficient degree of device safety and availability. Even so, these capacitors can also develop erratic end-of-life behaviour. For that reason, Type A capacitors should only be built into luminaires for operation in ambient conditions that are uncritical with regard to flammable materials.

Type A capacitors should only be built into luminaires for operation in ambient conditions that are uncritical with regard to flammable materials.

Temperature-protected capacitors are a further development of Type A capacitors and are fitted with a thermal fuse that is triggered by overheating as a result of electrical or thermal overload. They are tested in accordance with EN 61048 A2 and comply with Type A requirements. Excess temperature causes the two wire ends of the element inside the fuse to melt into bead shapes that are fully isolated from each other by special insulation. 95% of all critical cases of capacitor failure are preceded by a gradual increase in the loss factor, which is in turn always accompanied by an increase in the winding temperature. Thus, the fuse provides effective thermal protection in most cases of capacitor failure.

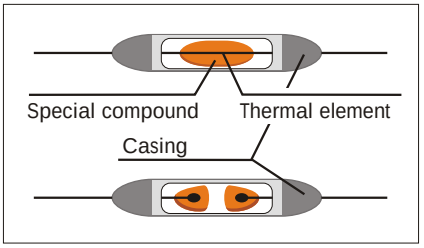

Fig. 6: Thermal element

4.3 Selection criteria for compensation capacitors

The capacitors are fixed using M8 screws or M12 base screws. In addition, potted capacitors are also available with a lateral clip. All capacitors can be mounted any way up. However, capacitors fitted with overpressure protection require clearance of at least 10 mm above the contacts so ensure the casing can expand unhindered if the fuse is triggered.

Capacitors can be mounted any way up.

VS capacitors are designed for continuous operation at the specified nominal voltage and temperature. Exceeding these values will shorten the life time of the capacitor. The specified maximum temperature refers to the permissible temperature at the capacitor's surface.

Capacitors must not be subjected to condensation. The prescribed humidity limits must not be exceeded, even during storage.

The following table provides experience values regarding the life time of capacitors. A 3% to 10% reduction in capacitance and a failure rate of 3% can be expected over a capacitor's life time. Overheating, overloads, mains harmonics and high humidity levels all go to shorten the life time of a capacitor.

From 2005 onwards, only lead-free soldering metals will be used.

do not need to be marked in accordance with the hazardous substances directive. The requirements of the RoHS Directive 2002/95/EC (Restriction of the Use of Hazardous Substances) are already being complied with, all except for leaded solder. From 2005 onwards, only lead-free soldering metals will be used.

The VS range includes parallel capacitors, Type A, in plastic or aluminium casing with a built-in discharge-resistor, whereby either push-in or IDC terminals for automated luminaire wiring can be fitted. In addition, Type B capacitors in an aluminium casing with a built-in discharge-resistor are available and can be provided with push-in terminals or spade connectors.

Capacitor	Life Time
Parallel capacitor with overpressure protection	approx. 75,000 hours
Parallel capacitor without overpressure protection in a plastic or aluminium casing	approx. 50,000 hours
Series capacitors with overpressure protection	approx. 50,000 hours

All VS capacitors with plastic casings are made of flame-retardant materials. However, the sealing compounds, oil fillings and the windings are flammable. Due consideration must be taken of this fact when integrating capacitors into a device. The fire load of an MPP capacitor amounts to approx. 40 MJ/kg. VS capacitors do not contain any PCBs, solvents or other hazardous or banned materials and therefore

Technical details on capacitors can be found in the main VS catalogue.



5. Lampholders for High-Pressure Discharge Lamps

Various lampholder families are available for various lamp bases, for instance: E27, E40, E26, E39, RX7s, Fc2, G8.5, GX10, G12, PG12-1, KY12s, etc.

The information provided on the label of a lampholder for high-pressure discharge lamps differs from the details found on the labels of lampholders for incandescent and fluorescent lamps. Apart from indicating the operating voltage in V, the lampholder or label or technical specifications will also specify the permissible ignition voltage in kV and the permissible current in Amps. These data could be presented as follows: 4 / 250 / 5kV or 4 / 500 / 5kV (current / working voltage / ignition voltage).

A change has taken place with regard to the working voltage during the last few years, whereby the permissible voltage has now been limited to 250 V for magnetic ballasts. Electronic ballasts can supply a lamp with working voltages of more than 250 V, a requirement of dimming operations. This value is specified as "U_{out}" on the electronic ballasts themselves and in the technical specifications. To provide luminaire manufacturers with a wide choice of different ballasts, the European lampholder industry has agreed on a working voltage of 500 V for lampholders. In line with IEC requirements, the creepage distances and clearances of the lampholders therefore have to be dimensioned to suit these voltages.

To provide luminaire manufacturers with a wide choice of different ballasts, the European lampholder industry has agreed on a working voltage of 500 V for lampholders.

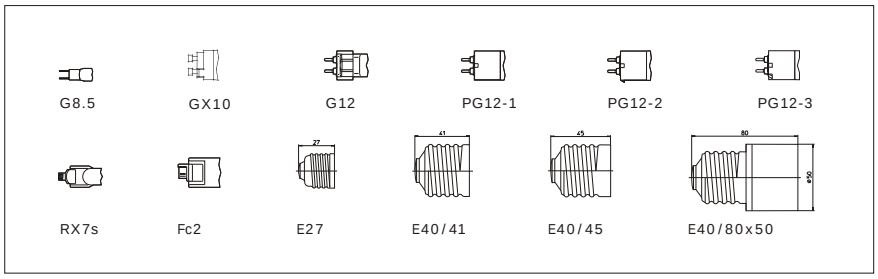

Fig. 7: Bases of the most commonly used HI, C-HI and HS lamps

The safety and ageing of lampholders are primarily influenced by the temperature loads in the luminaires. The T marking of a lampholder specifies the maximum temperature up to which the lampholder can be thermally loaded within the luminaire. The temperature within the luminaire must therefore be tested under all possible operating conditions, for which suitable provisions are contained in the existing IEC standards. However, mention must still be made of the end-of-life phenomena of dis-charge lamps that can lead to undefined temperature increases of the lampholders as a result of high currents. Therefore, also in the interest of lampholder protection, thermal cut-outs have to be fitted to luminaires or ballasts when using lamps that can develop this risk.

Therefore, also in the interest of lampholder protection, thermal cut-outs have to be fitted to luminaires or ballasts when using lamps that can develop this risk.

The UV radiation of the lamps coupled with the high-frequency voltage of the ignitor cause the surface of ceramic lampholders to ionise so that a part of the ignition voltage can be discharged to the earth potential. UV-stabilised plastic lampholders that do not display this effect are therefore also provided today. These plastic lampholders are smaller and manufactured to narrower tolerances, as a result of which they are more suitable for luminaire constructions. Compliance with the maximum temperature (T marking) in the luminaires is of particular importance when using plastic lampholders.

Special consideration must also be given to the cables of lampholders for discharge lamps. Silicone cables are highly resistant against dielectric breakdowns and thus particularly suitable for high ignition voltages. PTFE materials are not as breakdown-resistant and thus require cables with thicker insulation that are suitable for use in circuits involving ignition voltages.

Vossloh-Schwabe's lampholder range covers every need to a corresponding variety of cables. Luminaires must be wired to suit the temperature load and earth capacitance.

Technical details on VS lampholders for high-pressure discharge lamps can be found in the main VS catalogue.

6. Ignitors for High-Pressure Discharge Lamps

Apart from systems containing an integrated ignition device, high-pressure discharge lamps (HS, HI and C-HI lamps) are ignited using three different ignition systems:

- superimposed ignition systems
- pulse ignition systems
- immediate ignition systems (hot re-start ignition systems)

Immediate ignition systems ignite the hot lamp using high-frequency voltages of up to 70 kV in the MHz range. Owing to the creepage distances and clearances of the base-lampholder systems and the lamp construction, not all lamps permit a hot restart. In such cases, specific information must be obtained from lampholder and lamp manufacturers. As a result of their special technical requirements, immediate ignition systems are only rarely used. Superimposed or pulse ignition systems are used in the majority of cases.

The ignition voltage of HS, HI and C-HI lamps is dependent on the type of lamp technology used. Only high-pressure sodium lamps up to 70 W with an E27 base operate with an ignition voltage of 1.8 to 2.3 kV (as stipulated in IEC 60662). All other high-pressure discharge lamps of the sodium vapour and metal halide families are ignited with ignition voltages of 4.0 to 5.0 kV (with the exception of special lamps).

With the two ignition systems under review (superimposed and pulse principle), the ignition voltage for high-pressure discharge lamps has to be generated at the minimum supply voltage specified for the lamp type and at a certain phasing of the supply voltage. For this reason, ignition voltages usually range between 60 to 90° el and 240 to 270° el.

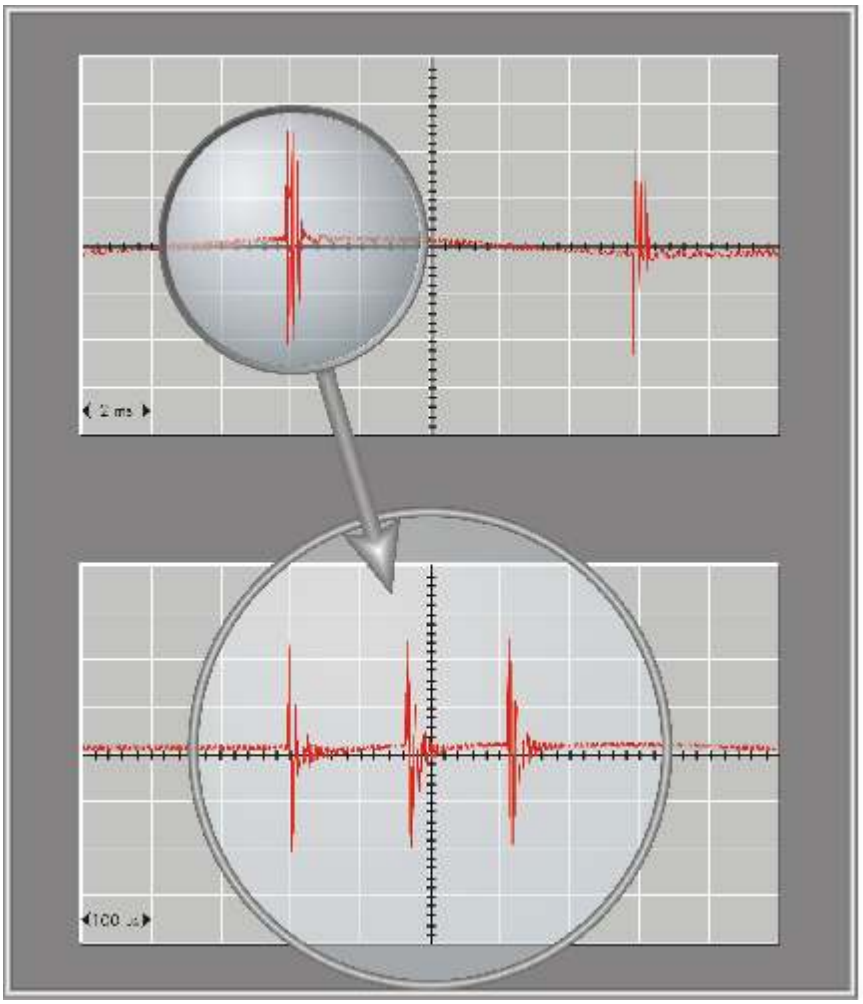

Fig. 8: Phasing of the ignition pulses: three ignition pulses on the positive and the negative half-wave of the supply voltage

Ignition voltages usually range between 60° to 90° el and 240° and 270° el.

Both methods have to ensure the generation of ignition pulses ceases once the lamp has been ignited.

With all ignition systems that do not feature an automatic switch-off, defective lamps or lamps at the end of their life time must be exchanged immediately to avoid damaging the luminaire and / or the luminaire components.

To protect its components, the luminaire must always be disconnected from the supply voltage before exchanging the lamp.

Regardless of the system used, lamps should only ever be exchanged after the luminaire has been disconnected from the supply voltage both for safety reasons and to avoid damaging the luminaire components.

6.1 Superimposed ignition system

With superimposed ignitors, the ignition voltage is generated on the input side of the ignitor with the help of an impulse transformer (through which the lamp current flows) and a capacitor. Superimposed ignitors therefore work independently of ballasts and generate defined ignition voltages within the specified mains voltage range, whereby the entire ± 10% tolerance range of the mains voltage can be utilised.

As the mains frequency only plays a minor role, these systems work equally well at 50 Hz and 60 Hz. In accordance with the lamp manufacturer's specifications, pulses or clusters of pulses of defined width and height are generated in every half-wave. After the lamp has been ignited, the lamp current flows through the secondary winding of the pulse transformer in the superimposed ignitor. This creates a power loss that leads to self-heating of the superimposed ignitor.

The inherent losses of the ignitor only account for a small part of the total system power, but still need to be taken into consideration when selecting an ignitor system for a luminaire. If one subtracts the self-heating from the specified maximum casing temperature (t_c), one arrives at the maximum permissible ambient temperature. The casing temperature must neither fall below –30°C, nor exceed the maximum value stated on the device.

The casing temperature must neither fall below –30°C, nor exceed the maximum value stated on the device.

To ensure safe ignition, superimposed ignitors should be mounted near the lamp-holder. The distance from the ignitor to the lamp is dependent on the respective maximum permissible load capacitance, which is specified in the technical specifications of each ignitor. The capacitive load of the cable is dependent on its specific properties and wiring and usually ranges between 10 pF to 100 pF per metre.

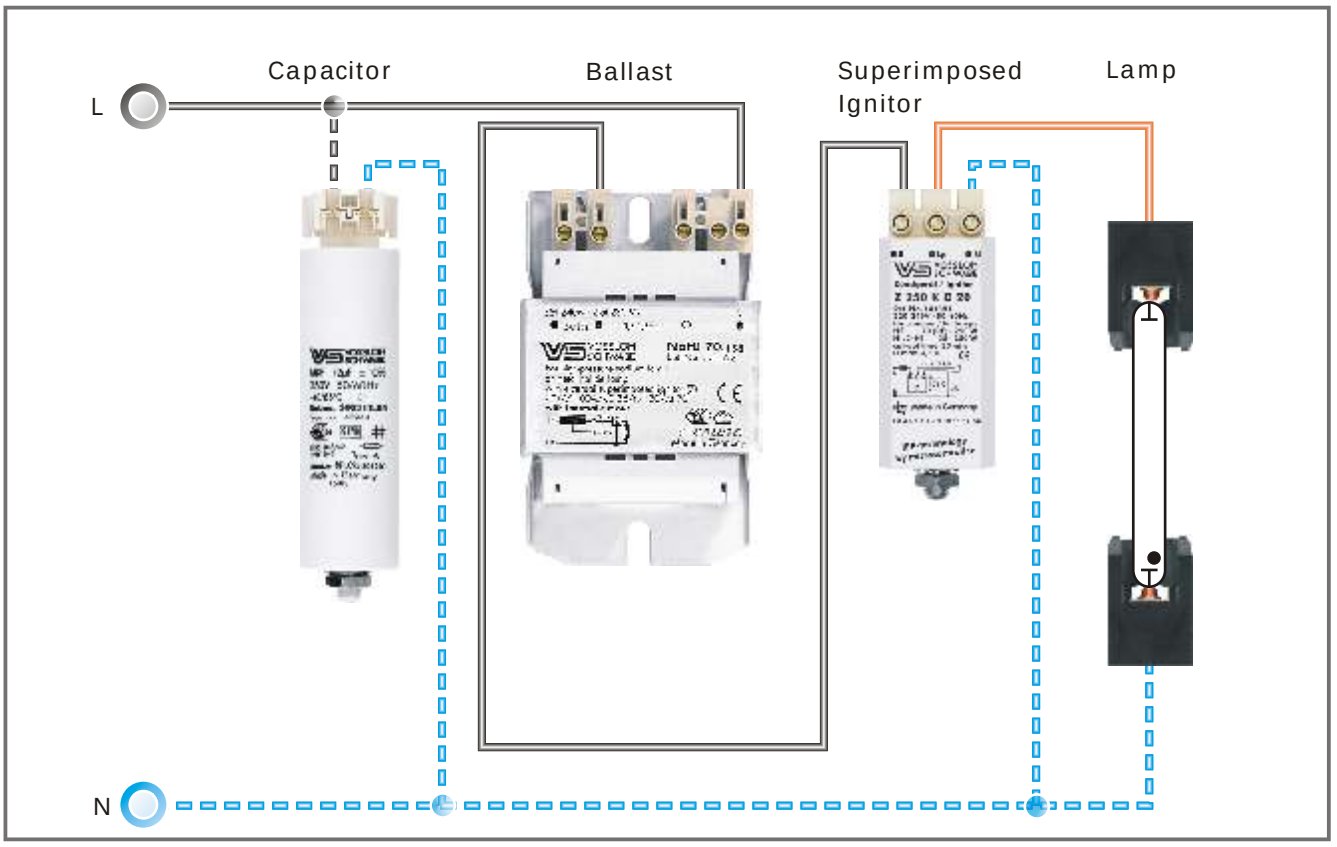

Fig. 9: Components of a circuit for high-pressure discharge lamps with a superimposed ignitor

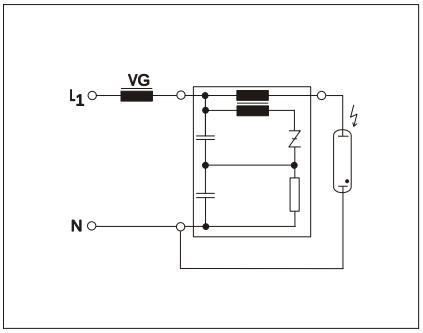

Fig. 10: Circuit principle of a superimposed ignitor

6.1.1 Power Flashing

Unfavourable physical interactions between the high-pressure discharge lamp and the superimposed ignitor can lead to the lamp current (with high di / dt) being switched on and off at high frequency (power flashing). This power flashing effect, which is associated with high current and voltage pulses, puts a strain on the components of the superimposed ignitor and can even lead to its destruction if no specially integrated protective components are fitted. To reduce this effect, a damping resistor has to be integrated in the ignitor and connected in series to the capacitor, which in turn is connected in parallel to the lamp. Vossloh-Schwabe ignitors are all fitted with a resistor of this kind (100 Ω), as recommended by ELMAPS (European Lamp Manufacturers Association for the Preparation of Standards). Furthermore, as experience has shown these special VS resistors to be particularly subject to high pulse loading, they have also been specifically tested and dimensioned to guarantee high pulse-resistance. These pulse-proof resistors are integral components of all VS ignitors.

Pulse-proof resistors are integral components of all VS ignitors.



6.2 Pulse ignition systems

Pulse ignitors utilise the winding of the inductive ballast to generate the ignition voltage needed to start high-pressure discharge lamps. For that reason these ballasts must be specially designed to withstand these high ignition voltages. The corresponding greater technical complexity particularly applies to the insulation as well as to how the creepage and air clearance distances are dimensioned. As high-voltage pulses are generated, the pulse ignition system is also suited to greater cable lengths between the ignitor and the lamp. In line with the state of the art, good ignitors are based on electronic circuits. In the simplest case, pulse ignitors are connected in parallel to the lamp to suit their design and technical requirements, whereby ignition voltages up to 1 kV can be generated.

Other models use a part of the ballast's winding with special tapping points to generate the ignition voltage. This design enables ignition voltages up to 5 kV and has made it the predominant system on the market.

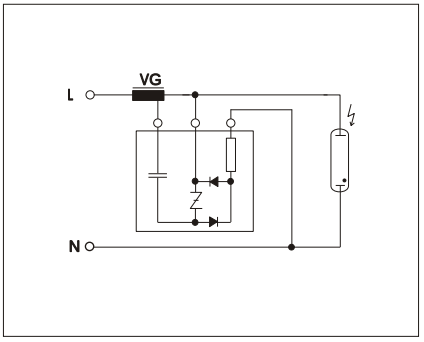

Fig. 11: Circuit principle of a pulse ignitor

In line with their constructive design, pulse ignitors can be operated within the specified mains voltage range and at frequencies of 50 to 60 Hz. The entire tolerance range of the mains voltage can also be utilised by pulse ignitors.

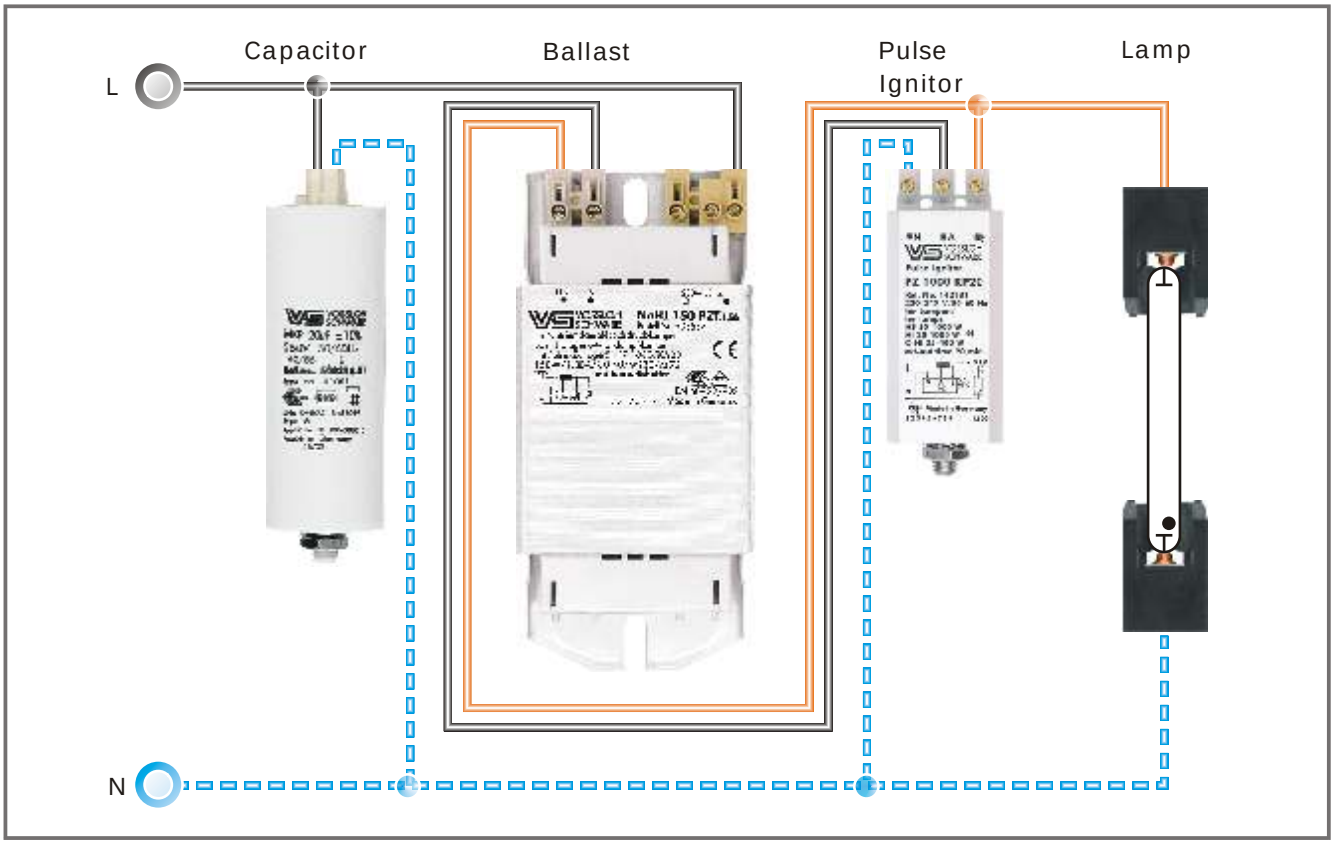

Fig. 12: Components of a circuit for high-pressure discharge lamps with a pulse ignitor

6.3 Effects of ageing high-pressure discharge lamps

Ageing discharge lamps can develop the following negative effects:

Flickering (cycling)

In ageing lamps, flickering is caused by an increase in the lamp's operating voltage. The longer the discharge lamp is in operation, the higher the operating voltage gets until the lamp goes out. After a cooling down period, which differs in accordance with the various types of high-pressure discharge lamp and the respective luminaire design, the discharge lamp can be re-ignited. During longer operation, the operating voltage will once more rise up to a point that will again cause the lamp to go out.

RFI interference

RFI interference can be caused by ageing or defective lamps. In both cases, the ignitor goes into permanent ignition mode, i.e. it sends out continuous ignition voltage pulses to the discharge lamp, which can lead to increased RFI interference.

Reduction of luminous flux

The operating behaviour of high-pressure discharge lamps changes in relation to the period of time and the number of times the lamp is switched on. The greatest loads occur during ignition and start up time and lead to electrode erosion. The blackening of the bulb additionally reduces luminous flux.

Rectifier effect

Ageing lamps can develop asymmetries – known as the rectifier effect – which are caused by uneven erosion of the electrode material or by unsealed parts of the burner. In such cases, pulse-type direct currents are generated during a half-wave and superimposed over the lamp current. As ballasts only feature low resistance to direct current, high currents occur that put an excessive load on the luminaire components. Please also see Chapter 2 "Life Time and Rectifier Effect of High-Pressure Discharge Lamps" (page 6).

6.4 Advantages of ignitors with automatic switch-off

Ignitors with automatic switch-off provide the following advantages:

Longer life time of the lighting system

The automatic switch-off substantially reduces the high loads that a lighting system can be subjected to as a result of the defective ignition behaviour of an ageing lamp. Preventing long-term high-voltage loading reduces the strain on components like ignitors, lampholders, connection terminals and conductors. This prolongs the life time of the entire lighting system.

Positive environmental impact

This switch-off function prevents the development of negative consequences such as a reduction of the light output, changes in light colour as well as continuous, irritating ignitions. The higher energy consumption associated with defective operation is also prevented. Continuous attempts to ignite also lead to greater electromagnetic interference. The switch-off function minimises interference in radios and other electronic systems.

Targeted and inexpensive maintenance

As the ignition process cuts out in the event of defective lamps, the latter are readily recognisable for maintenance staff and can be exchanged individually. This makes it possible to go from maintenance at fixed intervals to maintenance when needed. At the same time, this shortens the down times of the lighting system and lowers maintenance costs.

Perfectly suited to lamp ignition behaviour

Vossloh-Schwabe operating devices are developed in close cooperation with leading lamp manufacturers. VS ignitors with a switch-off function are fully in line with the IEC and lamp manufacturers' specifications for the respective lamp type. The programmed switch-off times are tailored to suit the ignition behaviour of each specific lamp type.

7. VS Ignitor Range

Vossloh-Schwabe's product range covers standard superimposed and pulse ignitors and models with automatic switch-off. Superimposed ignitors with automatic switch-off are available with various switch-off times and ignition voltage pulse mechanisms (A and D). In this respect, ignitors featuring the intelligent pulse-pause mode (IPP) are the best solution in terms of ignition reliability and shutting off the ignition pulses in the event of lamps that fail to light. Pulse ignitors with automatic switch-off (P series) operate in pulse-pause mode (PP).

Series A = Electronic ignitors with automatic switch-off

Series D = Digital superimposed ignitors with IPP technology and automatic switch-off

Series P = Pulse ignitors with automatic switch-off and PP mode



Fig. 13: Overview of VS ignitors with automatic switch-off



7.1 Overview of VS superimposed ignitors

VS Superimposed Ignitors		
Standard Superimposed Ignitors	Electronic Superimposed Ignitors with Automatic Switch-off Series A	Digital Superimposed Ignitors with Intelligent Pulse-Pause Mode and Automatic Switch-off Series D
Z..., Z...S, Z...K, Z...M, Z...M VS-Power, Z...M S, Z...M K, Z...M K VS-Power, Z...TOP, Z...L	Z...S A1, Z...S A20 Z...K A1 Z...SD20, Z...K A20 Z...M S A1, Z...M S A20 Z...M K A1, Z...M K A20	Z...D20 Z...K D20 Z...M K D20

Key to abbreviations:

S	= model with radial aluminium casing, suitable for luminaires of Protection Classes I and II
K	= model with plastic casing, suitable for luminaires of Protection Classes I and II
M	= compact design, suitable for luminaires of Protection Class I
VS Power	= economy version
TOP	= for luminaires with a high degree of protection IP55; suitable for luminaires of Protection Class I
L	= for long lead lengths
A1	= programmed switch-off time 82 sec.
A20	= programmed switch-off time 1310 sec.
D20	= switch-off function: max. ignition time in IPP mode 1216 sec.

7.1.1 Standard superimposed ignitors

After connection to the mains, standard superimposed ignitors generate ignition voltage pulses until the lamp has ignited. The ignition pulses are not interrupted in the event of lamps that fail to ignite.

7.1.2 Electronic superimposed ignitors with automatic switch-off – Series A

With A-series ignitors with automatic switch-off the generation of ignition voltage pulses is discontinued if the lamp has failed to ignite on reaching the predefined switch-off time (sum of all ignition periods), whereby this is defined to suit the respective lamp's re-ignition behaviour.

Z ... A1
For HS lamps
Programmed switch-off time: 82 seconds

Z ... A20
For HS, HI and C-HI lamps
Programmed switch-off time: 1,310 seconds

7.1.3 Digital superimposed ignitors with IPP technology and extended automatic switch-off – Series D

After connection to the mains, series D digital ignitors generate ignition voltage pulses that are controlled and if necessary switched off by the ignitor in accordance with the lamp's operating state, lamp type and safe burning time. Appropriately programmed microprocessors enable these extra performance features of digital ignitors with IPP technology (Intelligent Pulse-Pause Mode) and extended switch-off function. series D ignitors can be used for HS, HI and C-HI lamps. Ignitors of the series D automatically detect the type of lamp by gradually increasing the necessary ignition voltage pulse clusters (HS mode: 12 sec. ignition voltage pulse clusters with 24 sec. pause, HI mode: 24 sec. ignition voltage pulse clusters with 52 sec. pause).

Z ... D20
For HS, HI and C-HI lamps
Programmed switch-off time: 1,216 seconds

Functional description of digital superimposed ignitors:

A) Cold lamp start

A minimum ignition time of 30 seconds is specified for some lamp types to ensure safe ignition. For this reason, the ignitor starts with an extended pulse cluster of 36 seconds. Once the lamp has ignited, the ignition attempt counter is set back by 1 and the generation of ignition pulses ceases. During operation the lamp's operating voltage is monitored and once the safe burning time has elapsed (85 minutes), the ignition attempt counter is reset to its original value.

B) Hot lamp start

If the lamp is re-ignited after an interruption, the ignitor will only start the ignition programme after a pause of 24 seconds during which time the lamp can cool down.

After that, ignition voltage pulses are generated in HS mode (12 sec. pulse clusters, 24 sec. pause). If the lamp fails to ignite in this range, the ignitor switches to HI mode (24 sec. pulse clusters, 52 sec. pause). This ignition method was defined to comply with the re-ignition behaviour of the various lamp technologies.

C) Renewed re-ignition of a hot lamp

If a further re-ignition is required, the ignitor will begin the ignition programme by suppressing the ignition pulses for a period of time derived from the previous lamp ignition. This time is defined by the number of ignition pulse clusters that the ignitor counted during the preceding ignition. This guarantees the lamp can safely cool down. Suppressing the ignition pulses prevents the lamp from further heating up and enables faster re-ignition. One could describe it as a self-learning ignitor with a memory that "remembers" that the lamp failed to ignite.

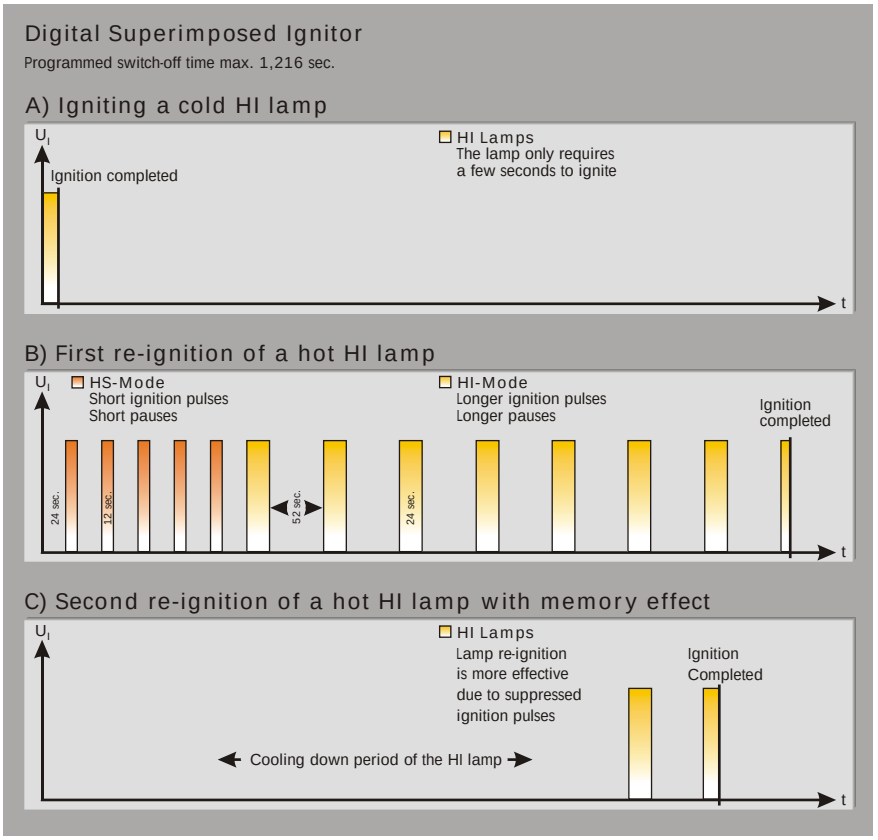

Fig. 14: Functional description of digital superimposed ignitors using an HI lamp as an example

If the lamp fails to ignite within approx. 20 minutes, the lamp is classified as defective and no further ignition voltage pulses are generated. If the lamp's safe burning time is not attained on two successive re-ignitions, the generation of ignition pulses will also cease.

D) Recognition of a lamp nearing the end of its life time

Lamps that are nearing the end of their life time are characterised by an increase in operating voltage and by failing to attain the safe burning time. Both parameters are captured and evaluated independently.
If the safe burning time is not achieved on three occasions (whereby the safe burning time counter is set back by one each time), the generation of ignition pulses will cease. These circuits for IPP ignitors, for which VS has applied for a patent, enable early recognition of lamps nearing the end of their life time.

Fig. 15 shows the ignition behaviour of lamps of varying ages.

Fig. 15 a) Functional lamps
After ignition, the counter is reduced by one and reset to the default value once the safe burning time has been attained.

Fig. 15 b) Nearing the End of Life Time
After ignition the safe burning time is achieved. During further operation of the HI lamp, it will go out as a result of ageing. After re-ignition, the counter will be reduced by one. As the safe burning time will neither be achieved on this occasion, nor during further operation after the second re-ignition, the ignition attempt counter will be reset to 0 and no further ignition pulses generated.

Fig. 15 c) The lamp is at the end of its life time
Every ignition attempt reduces the counter by one as the safe burning time is not attained. Once the counter has reached 0, no further ignition pulses are generated.

E) Differentiation between mains and lamp defects

In addition to voltage fluctuations, the supply voltage also displays momentary voltage peaks and interruptions that can make the lamp go out, which will cause the ignitor to re-ignite the lamp immediately. Following successful ignition the lamp's operating state will be compared with the safe burning time parameter. If the safe burning time is achieved, the lamp is assumed to be intact and the problem to have been caused by a problem in the supply voltage.

This process can be repeated any number of times without affecting re-ignition attempts (condition: burning time of lamp > safe burning time). Ignitors with IPP mode are therefore particularly suitable for continuous lighting applications (e.g. lighting for department stores or shops).

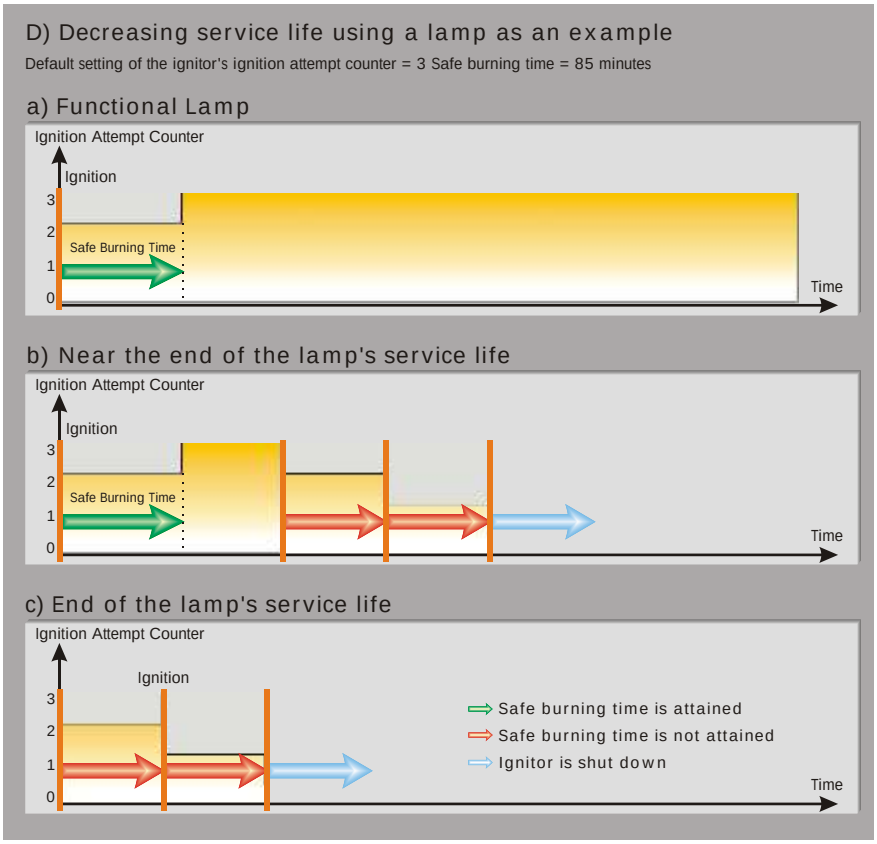

Fig. 15: Automatic switch-off mechanism of a digital superimposed ignitor with decreasing life time



Summary of performance features of digital ignitors with IPP technology – Series D

High efficiency ignition and re-ignition

High-pressure discharge lamps display differing ignition behaviour during cold and hot starts. For that reason, the time sequences and ignition voltage pulse clusters have been optimised with series D ignitors. This optimised and gentle ignition process does not impair the lamp's life time as ignition pulses that do not lead to lamp ignition and would shorten the life time are largely suppressed. A minimum ignition time is specified to ensure safe ignition during cold starts of metal halide lamps. This minimum ignition time is fully met by digital ignitors with IPP technology. By recognising the lamp's operating state, digital ignitors with IPP technology ensure that the lamp burner cools down before re-ignition during hot starts.

By recognising the operating state, digital ignitors with IPP technology ensure the lamp burner cools down properly.

Automatic lamp recognition

Various high-pressure discharge lamps such as high-pressure sodium lamps (HS), metal halide lamps (HI) and metal halide lamps with a ceramic discharge tube (C-HI) are used in large-scale lighting systems. The lamps differ with regard to their design and physical properties, thus also with regard to their ignition and re-ignition times. Digital IPP ignitors recognise the lamp type via the ignition behaviour and modify their ignition time management to suit the re-ignition characteristics. This prevents unnecessary ignition attempts. Digital IPP ignitors start their ignition programme in HS mode and then automatically switch to HI or C-HI mode. This automatic changeover is necessary owing to the differing ignition times of the lamp types and ensures the gentlest kind of ignition.

Digital IPP ignitors start their ignition programme in HS mode and then automatically switch to HI or C-HI mode.

Early recognition of lamps at the end of their life time

For the first time now, digital IPP ignitors check a lamp's safe burning time, which ensures that lamps nearing the end of their life time are recognised and no longer ignited. This safe burning time is then monitored in three consecutive cycles. If it is not attained within these three cycles, no further ignition voltage pulses are generated.

The integrated micro-controller technology makes it possible to define this safe burning time.

Checking the safe burning time ensures that lamps that are nearing the end of their life time are recognised and no longer ignited.

7.1.4 Technical specifications of VS superimposed ignitors

The table on the following page provides an overview of the technical specifications of VS superimposed ignitors.

During ignitor operation, it is necessary to measure the can temperature, which is made up of the ambient temperature and degree of self-heating. The maximum temperature of 105°C for VS superimposed ignitors is measured on the surface of the casing. Should the maximum temperature of t_c = 105°C be exceeded during operation, the ignitor must be mounted in a different location or a higher capacity ignitor should be used.

VS ignitors are built to guarantee long life time and a high degree of reliability.

VS ignitors are built to guarantee long life time with a high degree of reliability. Modern design, high-quality components and precise production enable an average life time of 50,000 hours with a failure rate of < 0.04% per 1,000 operating hours.

The life time of ignitors is decisively influenced by the operating temperature. The specified average life time applies to the maximum permissible t_c temperature value on the surface of the ignitor. If the temperature of the ignitor remains below this value, the life time will become longer, if it is exceeded, the life time will be shortened.

Consideration must also be taken of the fact that an ageing lamp can generate greater heat within the luminaire.

The distance between the ignitor and the lamp is also decisive for safe ignition. The connecting cables cause the ignition voltage to be dampened. The table indicates the maximum distances between ignitor and lamp. These distances are based on an assumed load capacitance of 100 pF per metre of cable (3x2.5 mm²). These lengths are typical values and should not be exceeded.

The distance between the ignitor and the lamp is also decisive for safe ignition.



Technical specifications of VS superimposed ignitors

V/Hz	Type	Max. Lamp Current A	Power Loss** W	Inherent heating** K	Ignition Voltage kV	Max. Load Capacity pF	Max. Cable length between ignitor and lamp* m	Screw Terminal mm^2	Casing Material	Dimensions (Ø x L or L x W x H) Length without threaded stud mm
220–240/ 50–60	Z 70 S	2	< 0.6	< 5	1.8–2.3	200	2	0.75–2.5	ALU	Ø 35 x 74
	Z 70 K	2	< 0.6	< 5	1.8–2.3	200	2	0.75–2.5	PC	76 x 34 x 29
	Z 70 S A1 Z 70 S A20	2	< 0.6	< 5	1.8–2.3	200	2	0.75–2.5	ALU	Ø 35 x 78
	Z 70 K A1 Z 70 K A20 Z 70 K D20	2	< 0.6	< 5	1.8–2.3	200	2	0.75–2.5	PC	80 x 34 x 30
	Z 250 Z 250 S	3,5	< 1.8	< 20	4.0–5.0	100	1	0.75–2.5	ALU	Ø 35 x 74
	Z 250 K	3,5	< 1.8	< 20	4.0–5.0	100	1	0.75–2.5	PC	76 x 34 x 29
	Z 250 S A1 Z 250 S A20	3,5	< 1.8	< 20	4.0–5.0	100	1	0.75–2.5	ALU	Ø 35 x 78
	Z 250 K A20 Z 250 K D20	3,5	< 1.8	< 20	4.0–5.0	100	1	0.75–2.5	PC	80 x 34 x 30
	Z 400 Z 400 S	5	< 3.0	< 25	4.0–5.0	100	1	0.75–2.5	ALU	Ø 45 x 76
	Z 400 M Z 400 M VS-Power Z 400 M S	5	< 3.0	< 35	4.0–5.0	50	0.5	0.75–2.5	ALU	Ø 35 x 74
	Z 400 M K Z 400 M K VS-Power	5	< 3.0	< 35	4.0–5.0	50	0.5	0.75–2.5	PC	76 x 34 x 29
	Z 400 S A20 Z 400 S D20	5	< 3.0	< 25	4.0–5.0	100	1	0.75–2.5	ALU	Ø 45 x 88
	Z 400 M S A1 Z 400 M S A20	5	< 3.0	< 35	4.0–5.0	50	0.5	0.75–2.5	ALU	Ø 35 x 78
	Z 400 M K A1 Z 400 M K A20 Z 400 M K D20	5	< 3.0	< 35	4.0–5.0	50	0.5	0.75–2.5	PC	80 x 34 x 30
	Z 600	7	< 6.0	< 35	4.0–5.0	250	2.5	0.75–2.5	ALU	Ø 50 x 94
	Z 750 S	8	< 3.0	< 20	4.0–5.0	100	1	0.75–2.5	ALU	Ø 50 x 94
	Z 1000 Z 1000 S Z 1000 TOP	12	< 6.0	< 35	4.0–5.0	100	1	0.75–2.5	ALU	Ø 50 x 84 TOP = 85 x 85 x 60
	Z 1000 S D20	12	< 6.0	< 35	4.0–5.0	100	1	0.75–2.5	ALU	Ø 50 x 84
	Z 1000 L	12	< 6.0	< 35	4.0–5.0	2000	20	0.75–2.5	ALU	Ø 50 x 84
	Z 1200/2,5	15	< 7.5	< 40	2.0–2.5	200	2	0.75–2.5	ALU	Ø 50 x 84
	Z 1200/9	15	< 10.0	< 40	7.0–8.0	50	0.5	0.75–2.5	ALU	Ø 50 x 133
	Z 2000 S	20	< 6	< 30	4.0–5.0	100	1	0.75–2.5	ALU	Ø 65 x 104
380–420/ 50–60	Z 2000 S/400V	12	< 5.0	< 32	4.0–5.0	2000	20	0.75–2.5	ALU	Ø 50 x 84

* cable with an assumed load capacitance of 100 pF per m (3 x 2.5 mm^2)

** at max. lamp current

7.1.5 Circuits for superimposed ignitors

50

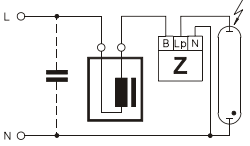

Superimposed ignition of HS and HI lamps

51

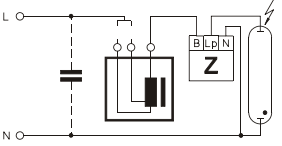

Superimposed ignition of HS and HI lamps (ballast with two alternative voltage tapping points)

52

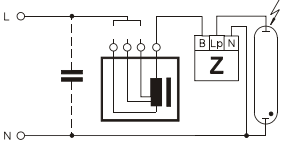

Superimposed ignition of HS and HI lamps (ballast with three alternative voltage tapping points)

53

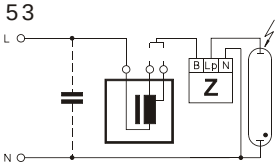

Superimposed ignition of HS and HI lamps (ballast with two alternative voltage tapping points)

65

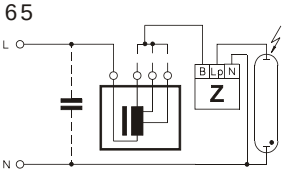

Superimposed ignition of HS and HI lamps with three alternative voltage tapping points

66

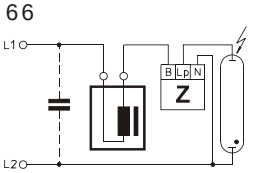

Superimposed ignition of HS and HI lamps with polyphase power systems

7.2 Overview of VS Pulse Ignitors

VS pulse ignitors are classified in line with the lamps for which they were designed.

VS Pulse Ignitors		
For 1 kV HI lamps PZI...	For Standard HS lamps PZS	For HS, HI and C-HI lamps PZ...
PZI 1000/1 k PZI 2000/400V 1,2 k	PZS 1000K	PZ 1000K PZ 1000KP20 (Series P) PZ 1000/400V KA5 (Series A)

Key to abbreviations:

K = model with plastic casing
A5 = programmed cut-out time 5 minutes (300 seconds)
P20 = switch-off function: max. ignition time in IPP mode 20 minutes (1,280 seconds)

7.2.1 Standard pulse ignitors

After connection to the mains, standard pulse ignitors generate ignition pulses until the lamp has ignited. The ignition pulses are not switched off if the lamp fails to ignite.

7.2.2 Pulse ignitors with automatic switch-off – Series A

Supplementary to standard pulse ignitors, these models with automatic switch-off stop generating ignition voltage pulses if the lamp fails to ignite after the defined switch-off time (sum of all ignition periods).

PZ ... A5
For HS lamps
Programmed switch-off time: 5 min. (300 seconds)

7.2.3 Pulse ignitors with pulse-pause mode – Series P

In contrast to the A series, ignition voltage pulses are generated in clusters by P-series ignitors. This process – called pulse-pause mode – reduces the load on luminaire components and eliminates EMC problems due to interference voltage. After connection to the mains, pulse-pause mode causes ignition voltage pulses to be generated in clusters until the switch-off time has been reached. The switch-off time is compared with the sum of all ignition periods in the event of a non-igniting lamp. If this value is attained, no further ignition pulses are generated.

PZ ... P20
For HS, HI and C-HI lamps
Programmed switch-off time: 1,280 seconds

7.2.4 Technical specifications of VS pulse ignitors

The following table provides an overview of the technical specifications of VS pulse ignitors.

During operation it is necessary to measure the ignitor temperature, which is made up of the ambient temperature and degree of self-heating. The maximum temperature of 95°C for VS pulse ignitors is measured on the surface of the casing. Should the maximum temperature of t_c = 95°C be exceeded during operation, the ignitor must be mounted in a different location.

The life time of pulse ignitors is decisively influenced by the operating temperature. The specified average life time applies to the maximum permissible tc temperature value on the surface of the ignitor can. Remaining below this temperature will lengthen the life time of the ignitor, exceeding it will shorten it.

The life time of pulse ignitors is decisively influenced by the operating temperature.

Consideration must also be taken of the fact that an ageing lamp can generate greater heat within the luminaire.

The distance between the ignitor and the lamp is also decisive for safe ignition. The connecting cables cause the ignition voltage to be dampened. The following table indicates the maximum cable distances between ignitor and lamp. This distance is based an assumed load capacitance of 100 pF per metre of cable (3x2.5 mm²).

Pulse ignitors enable longer cable lengths between ignitor and lamp than is possible with superimposed ignitors. However, ballasts must be used that are suited to the pulse ignition system in question.

Pulse ignitors enable longer cable lengths between ignitor and lamp.

Technical specifications of VS pulse ignitors

Type	Nominal Voltage / Frequency V / Hz	Casing Temperature t_c °C	Ignition Voltage kV	Max. Load Capacity pF	Max. Cable Length between Ignitor and Lamp* m	Screw Terminal mm²	Casing Material	Dimensions (L x W x H) Length without threaded stud mm
PZS 1000 K	220–240 / 50-60	95	ca. 4	4000	40	0.5–1.5	PC	53 x 28 x 27
PZ 1000 K			1.8–2.3 / 4.0–5.0	1000	10	0.75–2.5		53 x 28 x 27
PZ 1000 K P20			1.8–2.3 / 4.0–5.0					80 x 34 x 30
PZ 1000/400 V K A5	380–420 / 50–60		4.0–5.0	800	8			
PZI 1000/1K	220–240 / 50–60		0.7–0.9	10000	100	0.5–2.5		57 x 28 x 27
PZI 1000/1K	240 / 50–60		0.7–0.9					76 x 34 x 27
PZI 2000/400V	380–420 / 50–60		0.9–1.3					80 x 34 x 30

* cable with an assumed load capacitance of 100 pF per m (3 x 2.5 mm²) – must be observed when laying cables

7.2.5 Circuits for pulse ignitors

55

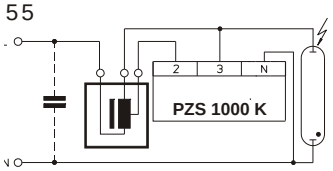

Pulse ignition of standard HS lamps

56

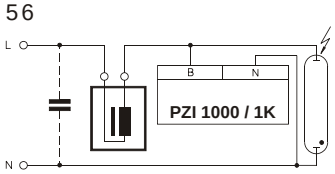

Pulse ignition of HI lamps,
ignition voltage 0.9 kV

57

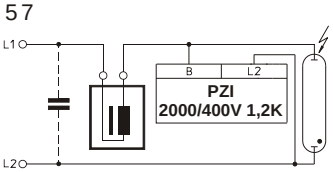

Pulse ignition of HI lamps,
ignition voltage 1.3 kV

58

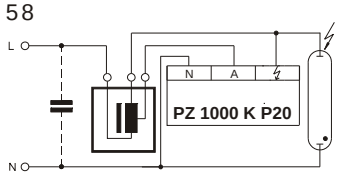

Pulse ignition of HS and HI lamps

8. Standards

DIN VDE 0100	Erection of power installation with nominal voltages up to 1000 volts
EN 55015	Limits and methods of measurement of radio disturbance charactaristics of electrical lighting and similar equipment
EN 60048	Capacitors for use in tubular fluorescent and other discharge lamp circuits – General and safety requirements
EN 60049	Capacitors for use in tubular fluorescent and other discharge lamp circuits – Performance requirements
EN 60598–1	Luminaires – part 1: General requirements and tests
EN 60923	Auxiliaries for lamps – Ballasts for discharge lamps (excl. tubular fluorescent lamps) – Performance requirements
EN 60927	Auxiliaries for lamps – Ignitors (other than glow starters) – Performance requirements
EN 61000–3–2	Electromagnetic Compatibility (EMC) – part 3: maximum values – main section part 2: maximum values for mains harmonics (device input current up to and including 16 A per conductor)
EN 61347–1	Lamp controlgear – Part 1: General and safety requirements
EN 61347–2–1	Lamp controlgear – Part 2-1: Particular requirements for starting devices (other than glow starters)
EN 61347–2–9	Lamp controlgear – Part 2-9: Particular requirements for ballasts for discharge lamps (excl. fluorescent lamps)
EN 61547	Equipment for general lighting purposes – EMC immunity requirements

9. Ignitor Reference Numbers

9.1 Superimposed ignition

Ref. No.	Type
140383	Z 250
140386	Z 400
140399	Z 600
140400	Z 1000
140413	Z 70 S
140425	Z 250 S
140427	Z 400 S
140430	Z 1000 S
140432	Z 2000 S
140435	Z 70 S A20
140436	Z 70 K A20
140471	Z 1000 L
140481	Z 70 K
140489	Z 250 K
140497	Z 2000 S/400 V
140571	Z 70 S A1
140585	Z 250 S A1
140587	Z 250 S A20
140593	Z 400 S A20
140594	Z 400 M
140597	Z 400 M K
140607	Z 1000 TOP
140608	Z 1200/2, 5
140609	Z 1200/9
140612	Z 1000 S A20
140661	Z 400 M K A1
140665	Z 400 M S A20
140672	Z 70 K A1
140677	Z 250 K A20
140679	Z 400 M K A20
140693	Z 400 M S
140694	Z 400 M S A1
141580	Z 70 K D20
141581	Z 250 K D20
141582	Z 400 M K D20
141583	Z 400 S D20
141584	Z 1000 S D20
142897	Z 400 M K VS-Power
146990	Z 750 S
147707	Z 400 M VS-Power

9.2 Pulse ignition

Ref. No.	Type
140613	PZS 1000 K
140617	PZI 1000/1K
141497	PZI 2000/400 V 1,2 K
141899	PZI 1000/1K
142777	PZ 1000/400 V K A5

Visit our website and try our electronic catalogue at:
www.vossloh-schwabe.com



On request we will be glad to send you our sales documentation for further areas of lighting technology.



www.beckerwerbung.com

Subsidiaries

Vossloh-Schwabe
Deutschland GmbH
P.O. Box 28 69 · D-58478 Lüdenscheid
Germany:
Phone: +49/(0) 23 51/10 10
Fax: +49/(0) 23 51/10 12 17
Export:
Phone: +49/(0) 23 51/10 10
Fax: +49/(0) 23 51/10 13 84

Belgium, Netherlands
Vossloh-Schwabe vbr
Molstraat 30
3001 Leuven, Belgium
Phone: +32/(0)16/25 33 30
Fax: +32/(0)16/25 50 30

China
Vossloh-Schwabe Electrical Appliances
Trading (Shanghai) Co., Ltd.
705# room, D building,
80# CaoBao Road
Shanghai Everbright
Convention & Exhibition Center
Shanghai, China P.C. 200235
Phone: +86/21/6432 64 10
Fax: +86/21/6432 67 90

East Europe
Vossloh-Schwabe Deutschland GmbH
Sales Office East Europe
Brunnerova ul. 4
16300 Prag 6, Czech Republic
Phone: +4 20/(0)2/35 31 22 88
Fax: +4 20/(0)2/35 31 22 61

France
Vossloh-Schwabe France S.a.r.l.
Zl.-Nord
20, rue A. Kiener
68016 Colmar, France
Phone: +33/(0)3 89/20 12 12
Telex: 880201
Fax: +33/(0)3 89/24 18 65

Great Britain, Ireland
Vossloh-Schwabe UK Ltd.
42 Tanners Drive
Blakelands
Milton Keynes, MK14 5BW
Great Britain
Phone: +44/(0)19 08/51 78 00
Fax: +44/(0)19 08/51 78 17

www.vossloh-schwabe.com

Hungary
Vossloh-Schwabe Deutschland GmbH
Sales Office Hungary
Ròbert Kàroly krt. 16/a
1138 Budapest, Hungary
Phone: +36/30/298/43 00
Fax: +36/1/270/12 62

India
Vossloh-Schwabe India Pvt. Ltd.
A-491, 12 & 13
3rd Pasta Lane, Colaba
Mumbai 400 005, India
Phone: +91/22/2 88 33 55
Fax: +91/22/2 88 13 66

Italy, Portugal, Greece
Vossloh-Schwabe Italia S.p.A.
Via Strada S. Martino 15
47027 Sarsina/Forlí, Italy
Phone: +39/05 47/9 81 11
Fax: +39/05 47/9 82 60

Korea
Vossloh-Schwabe Korea
#807, 8th Fl., Renaissance Tower
Korea Social Welfare Center
456 Gongduk-dong, Mapo-ku
Seoul, Korea
Phone: 82 2 6377 7750/-1
Fax: 82 2 6377 7752

Poland
Vossloh-Schwabe Deutschland GmbH
Sales Office Poland
ul. Torowa 3 F
30435 Kraków, Poland
Phone: +48/(0)12/2 69 06 35
Fax: +48/(0)12/2 69 06 72

Romania
Vossloh-Schwabe Deutschland GmbH
Sales Office Romania
Calea Mosilor Nr. 288, bl. 32
Sc. 1, Ap. 6, Sector 2
020895 Bucharest, Romania
Phone: +402/16 10 74 37
Fax: +4 02/16 10 74 37

Serbia, Montenegro
Vossloh-Schwabe Deutschland GmbH
Sales Office Belgrade/Serbia and
Montenegro
Straska Pindzura 9/1
11000 Belgrade
Phone: +381/63/269094
Fax: +381/11/3541927

Singapore
Vossloh-Schwabe Pte. Ltd.
10 Toh Guan Road
04–02 TT International Trade Park
Singapore 608838
Phone: +65/62 75 75 33
Fax: +65/62 75 76 33

Spain, South America
Vossloh-Schwabe Ibérica, S.L.
Avenida Drassanes N° 6–8, 7°, 1ª
08001 Barcelona, Spain
Phone: +34/93/4 81 70 70
Fax: +34/93/4 81 70 71

Sweden, Denmark,
Finland, Norway
Vossloh-Schwabe Skandinavien A.B.
Kungsporten 1c
42750 Billdal, Sweden
Phone: +46/(0) 31/91 49 40
Fax: +46/(0) 31/91 40 95

Taiwan
Vossloh-Schwabe Pte. Ltd.
Taiwan Branch
9. FL-2, No. 80
Sung Chiang Road
Taipei, Taiwan
Phone: +8 86/(0)2/25 68 36 22
Fax: +8 86/(0)2/25 68 36 20

Thailand
Vossloh-Schwabe (Trading) Ltd.
3rd Floor (Unit 1) BUI Building 1
175–177 Soi Anumarnratchathon 1
Surawong Road
Kwaeng Suriyawongse
Khet Bangrak, Bangkok 10500
Thailand
Phone: +66/(0)2/6 34-73 11
Fax: +66/(0)2/6 34-73 13

Tunisia
Vossloh-Schwabe Tunisie S.A.
Rue de l'énergie, BP. 299
Zone Industrielle de Ben Arous 2013
Tunis, Tunisia
Phone: +2 16/71/38 49 00
Fax: +2 16/71/38 49 90

USA, Canada, Mexico
Vossloh-Schwabe, Inc.
55 Mayview Road
Lawrence, PA 15055, USA
Phone: +1/7 24/7 43 47 70
Fax: +1/7 24/7 43 47 71

1/2005