VOSSLOH SCHWABE



# AluLED IP20/IP64

High efficient "plug & play" LED profile

# AluLED IP20/IP64

## HIGHLY EFFICIENT PLUG & PLAY LED PROFILE

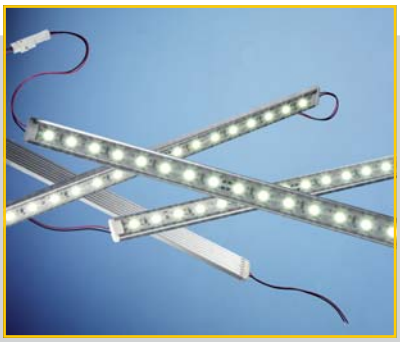

## AluLED, THE IDEAL LED MODULES

Thanks to being both vibration- and shock-proof, the highly efficient AluLED IP20 and IP64 modules are ideal for both indoor and protected outdoor applications. A key advantage of AluLED is the extremely slim and flat design, which makes it suitable for illuminating complex structures or places where space is too limited to permit traditional light sources to be installed.

AluLED is available in different lengths to allow easy customisation. Its long service life of up to 45,000 hours will effectively cut necessary maintenance costs. AluLED's extreme durability efficiency will help you to significantly reduce $CO_2$ emissions and counter greenhouse effect. Clear or diffused covers are available to achieve desired lighting effect and mood.

**Typical applications for AluLED IP20**

- Indoor contour lighting
- Handrail illumination
- Kitchen lighting

**Typical applications for AluLED IP64**

- Outdoor protected border lighting
- Outdoor protected architectural illumination
- Outdoor protected illuminated path markings
- Bathrooms and rooms with high humidity
- Refrigerated food counters

UV FREE 0% MERCURY RoHS CE





# ADVANTAGES OF ALULED LIGHTING

- **PLUG & PLAY**
- **SUITABLE FOR INDOOR AND PROTECTED OUTDOOR APPLICATIONS**
- **LONG SERVICE LIFE OF UP TO 45,000 HOURS (>50% OUTPUT)**
- **SLIM AND FLAT DESIGN**
- **AVAILABLE IN VARIOUS WHITE TONES AND RGB AND IN DIFFERENT LENGTHS FOR EASY CUSTOMISATION**
- **INTEGRATED HEAT SINK**
- **SIMPLE MOUNTING SYSTEM FOR EASY MAINTENANCE**
- **NO UV AND IR RADIATION**

**Service life expectation (lumen depreciation)**

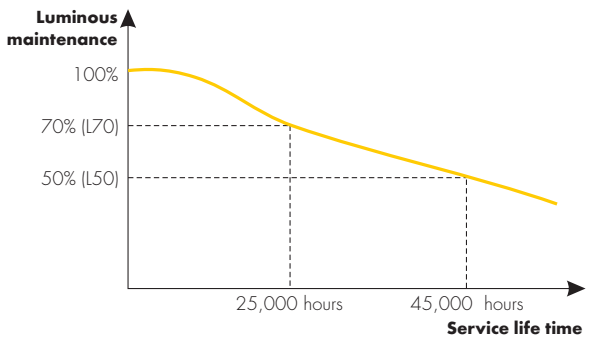




# AluLED IP20

AluLED IP20 is ideal for indoor applications and the slim & flat design is extremely convenient for low profile lighting design mounting.
It is available in neutral white (4000 K). Further white tones on request.

**Technical notes**
Voltage supply: 24 V DC
Beam angle: 120°
Allowed ambient temperature: –20 to 40 °C
Allowed storage temperature: –40 to 85 °C
Degree of protection: IP20
Maximum bridging current load: 3 A



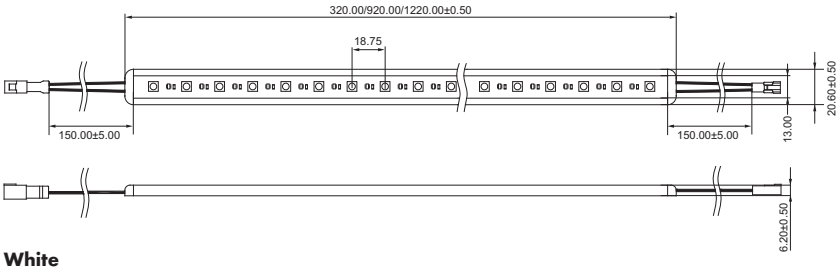


**White**

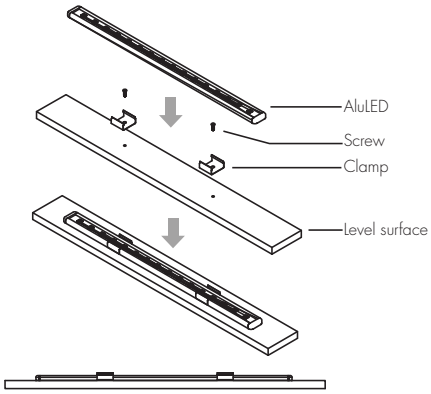


| White Modules | | | | | | | | | | | |
|---|---|---|---|---|---|---|---|---|---|---|---|
| Type | **Ref. No.** | Length mm | No. of LEDs | Current mA | Colour | Colour temperature K | Luminous flux lm | Beam angle ° | Power W | Cover | Packing unt pcs. |
| AluLED-320-4000-IP20 - D | **552092** | 320 | 18 | 180 | neutral white | 4000 | 220 | 120 | 4.3 | Diffuse | 1 |
| AluLED-320-4000-IP20 - C | **552093** | 320 | 18 | 180 | neutral white | 4000 | 240 | 120 | 4.3 | Clear | 1 |
| AluLED-1220-4000-IP20 - D | **552094** | 1220 | 72 | 720 | neutral white | 4000 | 870 | 120 | 17.3 | Diffuse | 1 |
| AluLED-1220-4000-IP20 - C | **552095** | 1220 | 72 | 720 | neutral white | 4000 | 950 | 120 | 17.3 | Clear | 1 |

Note: Further colours for AluLED are available on request

# AluLED IP64

AluLED IP64 is ideal for outdoor protected applications under humid conditions (excluding direct UV and water exposure) and the slim & flat design is extremely flexible for low profile lighting design mounting.
It is available in different CCTs and RGB to suit different application needs.



**Technical notes**
Voltage supply: 24 V DC
Beam angle: 120°
Allowed ambient temperature: -30 to 85 °C
Allowed storage temperature: -40 to 85 °C
Degree of protection: IP64
Maximum bridging current load: 3 A

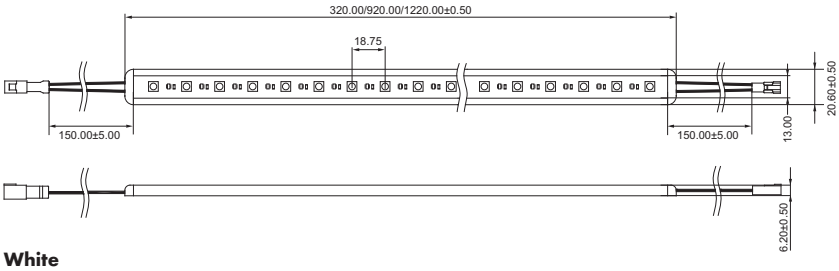


**White**

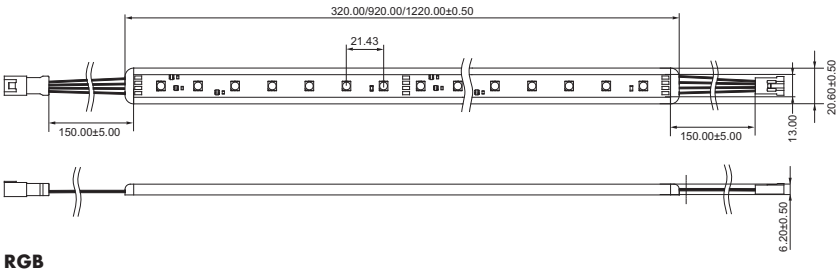


**RGB**

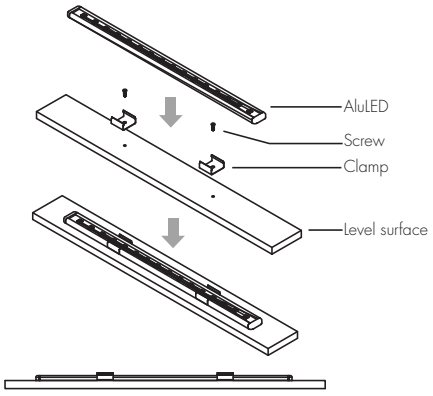


| White Modules | | | | | | | | | | |
|---|---|---|---|---|---|---|---|---|---|---|
| Type | **Ref. No.** | Length mm | No. of LEDs | Current mA | Colour | Colour temperature K | Luminous flux lm | Beam angle ° | Power W | Packing unit pcs. |
| AluLED-320-3000 | **543314** | 320 | 16 | 160 | warm white | 3000 | 160 | 120 | 3.8 | 1 |
| AluLED-920-3000 | **543315** | 920 | 48 | 480 | warm white | 3000 | 490 | 120 | 11.5 | 1 |
| AluLED-1220-3000 | **543316** | 1220 | 64 | 640 | warm white | 3000 | 630 | 120 | 15.3 | 1 |
| AluLED-320-6000 | **543317** | 320 | 16 | 160 | cool white | 6000 | 192 | 120 | 3.8 | 1 |
| AluLED-920-6000 | **543318** | 920 | 48 | 480 | cool white | 6000 | 576 | 120 | 11.5 | 1 |
| AluLED-1220-6000 | **543319** | 1220 | 64 | 640 | cool white | 6000 | 768 | 120 | 15.3 | 1 |

| RGB Modules | | | | | | | | | | | | |
|---|---|---|---|---|---|---|---|---|---|---|---|---|
| Type | **Ref. No.** | Length mm | No. of LEDs | Current mA | Luminous flux (lm) | | | Dom. wavelength (nm) | | | Beam angle ° | Power W | Packing unit pcs |
| | | | | | red | green | blue | red | green | blue | | | |
| AluLED-320-RGB | **543320** | 320 | 14 | 120 | 16.8 | 38.1 | 11.2 | 620-630 | 520-535 | 465-475 | 120 | 2.8 | 1 |
| AluLED-920-RGB | **543321** | 920 | 42 | 360 | 50.4 | 114.2 | 33.6 | 620-630 | 520-535 | 465-475 | 120 | 8.6 | 1 |
| AluLED-1220-RGB | **543322** | 1220 | 56 | 480 | 67.2 | 152.3 | 44.8 | 620-630 | 520-535 | 465-475 | 120 | 11.5 | 1 |

Note: Further colours for AluLED are available upon request

# AluLED – LED Connecting Technology

All components of the AluLED series can be connected by the use of VS Easy Connect system. With this, a simple, cost-effective and solderless assembly is possible.

**EasyConnect Cable**
Max. permissible current: 3 A
Number of strands: 2/4
(Strand diameter: 0.35 mm²/22 AWG)
For monochrome modules with 2 strands
**Ref. No.: 543426** 25 cm, male connector
**Ref. No.: 543427** 50 cm, male/female connector
For RGB modules with 4 strands
**Ref. No.: 543428** 25 cm, male connector
**Ref. No.: 543429** 50 cm, male/female connector

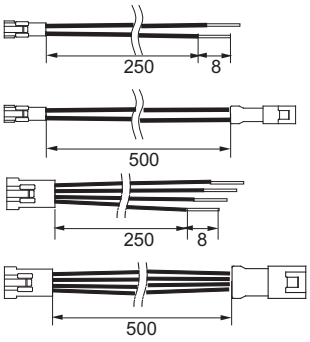




**DigiLED Slave CA**
The active slave is to increase the system performance
Signal amplification on the 2 slave RGB (W) channels
$t_c$ = 65 °C max.
Max. current per control channel per slave: 1.25 A
Type: WU-ST-002-DigiLED-Slave CA
**Ref. No.: 186142**

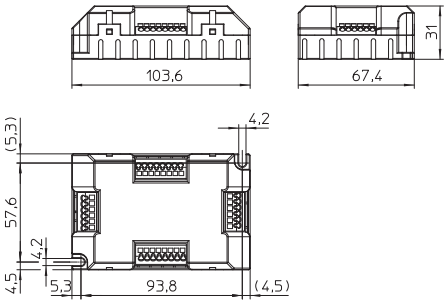




# Electronic Converters for LED Modules

Short circuit protection
Overload and temperature protection
Protection against "no load" operation

| Electronic converter | | | | | | | | | | | |
|---|---|---|---|---|---|---|---|---|---|---|---|
| Max. output W | Type | **Ref. No.** | Mains voltage 50/60 Hz V | Voltage output V | Mains current mA | Output current A | Ambient temperature $t_a$ °C | Casing temperature $t_c$ °C | Power factor | With cord grip | Weight g |
| **Degree of protection: IP20** | | | | | | | | | | | |
| 0.1-20 | EDXe 120/24 V | **186129** | 220-240 | 24 ±0.5 | 230/210 | 0.85 | -20 to 45 | 75 | 0.5 | – | 155 |
| 0.0-50 | EDXe 150/24 V | **186218** | 220-240 | 24 ±0.72 | 260/235 | 0.0-2.1 | -40 to 45 | 70 | 0.97 | – | 290 |
| 0.0-50 | EDXe 150/24 V | **186219** | 220-240 | 24 ±0.72 | 260/235 | 0.0-2.1 | -40 to 45 | 70 | 0.97 | • | 320 |
| 0.0-70 | EDXe 170/24 V | **186103** | 220-240 | 24 ±0.48 | 360/310 | 0.0-2.9 | -20 to 45 | 70 | 0.97 | – | 340 |
| 0.0-70 | EDXe 170/24 V | **186104** | 220-240 | 24 ±0.48 | 360/310 | 0.0-2.9 | -20 to 45 | 70 | 0.97 | • | 360 |
| 0.0-130 | EDXe 1130/24 V | **186131** | 220-240 | 24 ±0.48 | 640/585 | 0.0-5.4 | -20 to 45 | 75 | 0.98 | – | 370 |
| 0.0-130 | EDXe 1130/24 V | **186132** | 220-240 | 24 ±0.48 | 640/585 | 0.0-5.4 | -20 to 45 | 75 | 0.98 | • | 390 |
| **Degree of protection: IP67** | | | | | | | | | | | |
| 0.0-70 | EDXe 170/24 V | **186105** | 220-240 | 24 ±0.48 | 360/330 | 0.0-2.9 | -20 to 45 | 70 | 0.97 | • | 515 |
| 0.0-130 | EDXe 1130/24 V | **186133** | 220-240 | 24 ±0.48 | 640/585 | 0.0-5.4 | -20 to 45 | 70 | 0.97 | • | 545 |

**Converter EDXe 120/24 V IP20**
Shape (LxWxH): 182x42x18 mm
Degree of protection: IP20
SELV-equivalent
Connections/leads:
prim.: mains connection cable, length: 1.48 m
sec.: screw terminals 1.5 mm²
**Ref. No.: 186129**



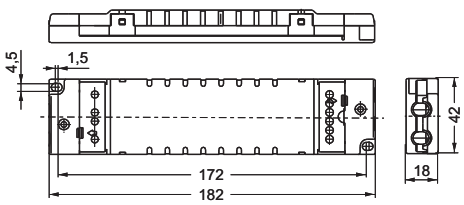

**Converters EDXe 150, 170, 1130/24 V IP20**
Degree of protection: IP20
SELV
Push-in terminals with push button:
2.5 mm² solid lead

**Without cord grip**
Shape (LxWxH): 187x60x36 mm
Fixing distance: 178 mm
Type: EDXe 150/24 V
**Ref. No.: 186218** output: 0–50 W
Shape (LxWxH): 200x61x49
Fixing distance: 191 mm
Type: EDXe 170/24 V
**Ref. No.: 186103** output: 0–70 W
Type: EDXe 1130/24 V
**Ref. No.: 186131** output: 0–130 W

**With cord grip**
Cord grip approved for mains leads:
H03VV-F 3X0.75 mm² or NYM 3X1.5 mm²
Cord grip approved for output leads:
SIHY-Cu 4X1 mm² or SIHSI-Cu 4X1 mm²
Shape (LxWxH): 224x60x36 mm
Fixing distance: 210 mm
Type: EDXe 150/24 V
**Ref. No.: 186219** output: 0–50 W
Shape (LxWxH): 245 x61x49 mm
Fixing distance: 231 mm
Type: EDXe 170/24 V
**Ref. No.: 186104** output: 0–70 W
Type: EDXe 1130/24 V
**Ref. No.: 186132** output: 0–130 W



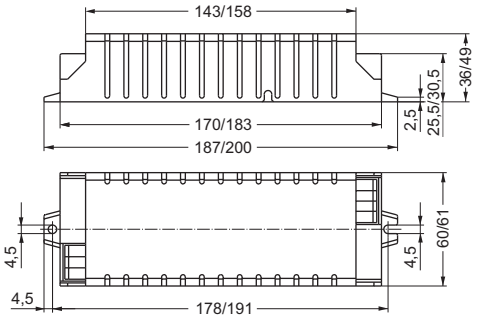


**With cord grip**

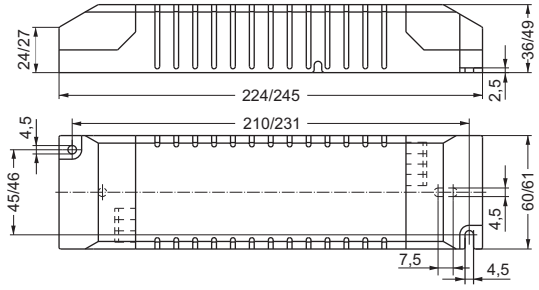


**Converter EDXe 170/24 V IP67**
Shape (LxWxH): 275 x 79.1x 51 mm
Fixing distance: 235 mm
Degree of protection: IP67, SELV
Pre-assembled connection:
prim.: 3x1 mm², H05RN-F, length: 500 mm
sec.: 2x2 mm², S07RN-F, length: 500 mm
**Ref. No.: 186105** output: 0–70 W



**Converter EDXe 1130/24 V IP67**
Shape (LxWxH): 275 x 79.1x 51 mm
Fixing distance: 235 mm
Degree of protection: IP67, SELV
Pre-assembled connection:
prim.: 3x1 mm², H05RN-F, length: 500 mm
sec.: 2x2 mm², S07RN-F, length: 500 mm
**Ref. No.: 186133** output: 0–130 W

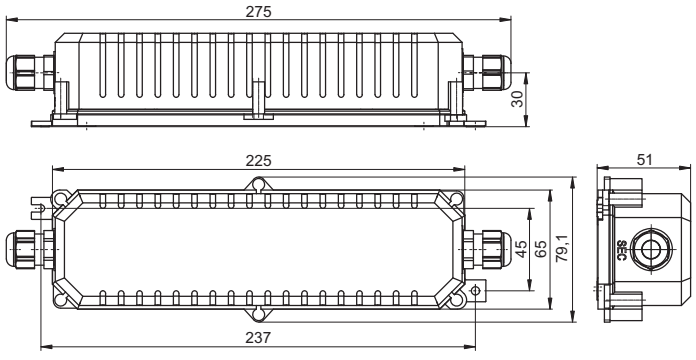

# Colour Control Modules – DigiLED

The DigiLED CA series is based on a system design that combines simplicity, flexibility and reliability.



**DigiLED Manual CA**
Colour controls via key pads (6 keys)
Individual colour control or selection of pre-set programs
$t_c$ = 55 °C max.
Max current per control channel: 1.25 A
Type: WU-ST-001-Digi-manuell-CA
**Ref. No.: 186136**

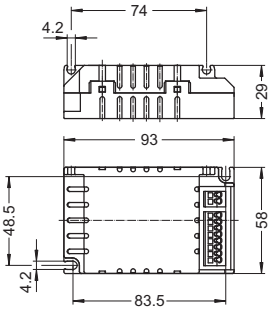




**DigiLED DMX CA**
Digital colour controls via DMX light management
$t_c$ = 60 °C max.
Max current per control channel: 1.25 A
Type: WU-ST-003-DigiLED-DMX-CA
**Ref. No.: 186153**

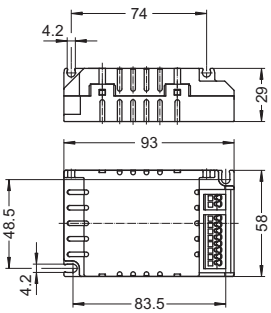




**DigiLED DALI CA**
Digital colour controls via DALI light management
$t_c$ = 60 °C max.
Max current per control channel: 1.25 A
Type: WU-ST-004-Digi-DALI-CA
**Ref. No.: 186138**

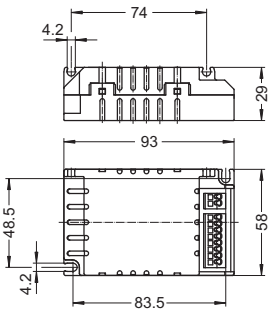




**DigiLED Push CA**
Colour adjustment by separate push button
Permits retrieval of pre-set programs
$t_c$ = 55 °C max.
Max current per control channel: 1.25 A
Type: WU-ST-006-DigiLED-Push CA
**Ref. No.: 186144**

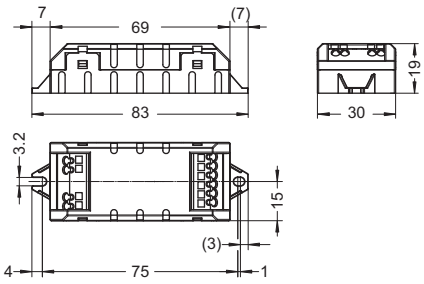




**DigiLED Mono CA**
For dimming of single-colour LED modules
Dimming via 1 – 10 V interface or external PWM signal
$t_c$ = 55 °C max.
Max. current per control channel: 5 A
Type: WU-ST-010-DigiLED-Mono CA
**Ref. No.: 186155**

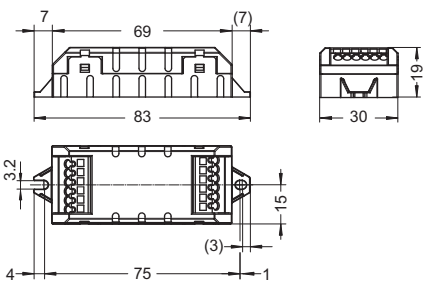

# AluLED Wiring Layout

### Wiring layout for white modules

When selecting LED converters, care must be taken to observe the technical specifications and comply with the maximum power rating of the converters to avoid overload.

### Non-dimmable wiring layout

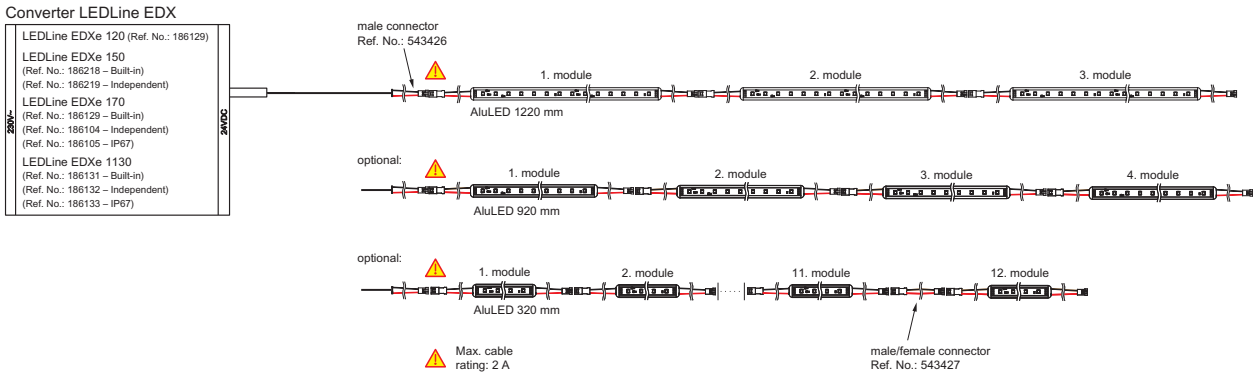


### 1–10 V dimmable wiring layout

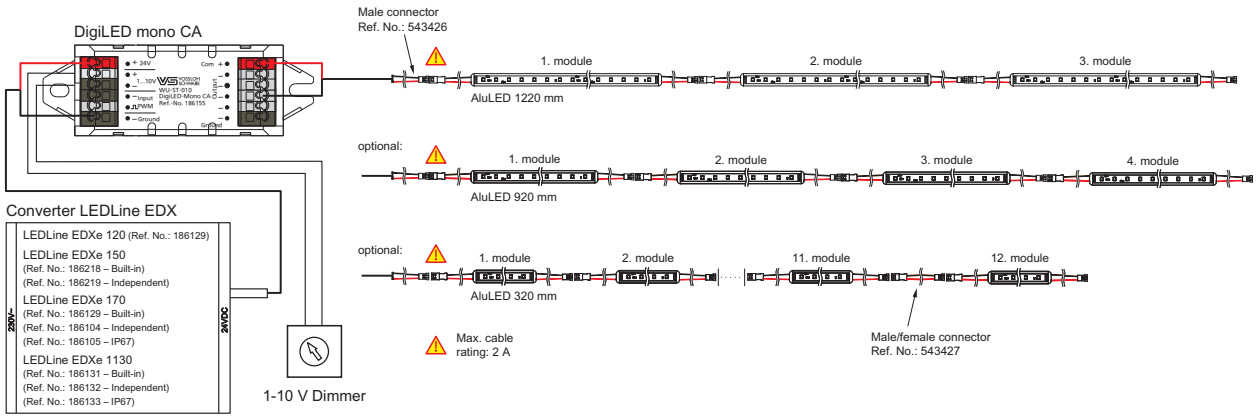


| AluLED IP20 | | | | | |
|---|---|---|---|---|---|
| Type | **Ref. No.** | Length mm | Power W | Current mA | Max. number of modules per output/slave |
| AluLED-320-4000-IP20 - D | **552092** | 320 | 4.3 | 180 | 16 |
| AluLED-320-4000-IP20 - C | **552093** | 320 | 4.3 | 180 | 16 |
| AluLED-1220-4000-IP20 - D | **552094** | 1220 | 17.3 | 720 | 4 |
| AluLED-1220-4000-IP20 - C | **552095** | 1220 | 17.3 | 720 | 4 |

| AluLED IP64 – White modules | | | | | |
|---|---|---|---|---|---|
| Type | **Ref. No.** | Length mm | Power W | Current mA | Max. number of modules per output/slave |
| AluLED-320-3000 | **543314** | 320 | 3.8 | 160 | 18 |
| AluLED-920-3000 | **543315** | 920 | 11.5 | 480 | 6 |
| AluLED-1220-3000 | **543316** | 1220 | 15.3 | 640 | 4 |
| AluLED-320-6000 | **543317** | 320 | 3.8 | 160 | 18 |
| AluLED-920-6000 | **543318** | 920 | 15.3 | 480 | 6 |
| AluLED-1220-6000 | **543319** | 1220 | 3.8 | 640 | 4 |

### RGB wiring layout with DigiLED colour control modules

The wiring diagram shows the typical wiring layout of the AluLED module with 24 V converters, DigiLED colour control modules and a slave (CA) to increase system performance.

The passive slave (CA) enables system extension without needing to amplify the signal.

### RGB wiring layout

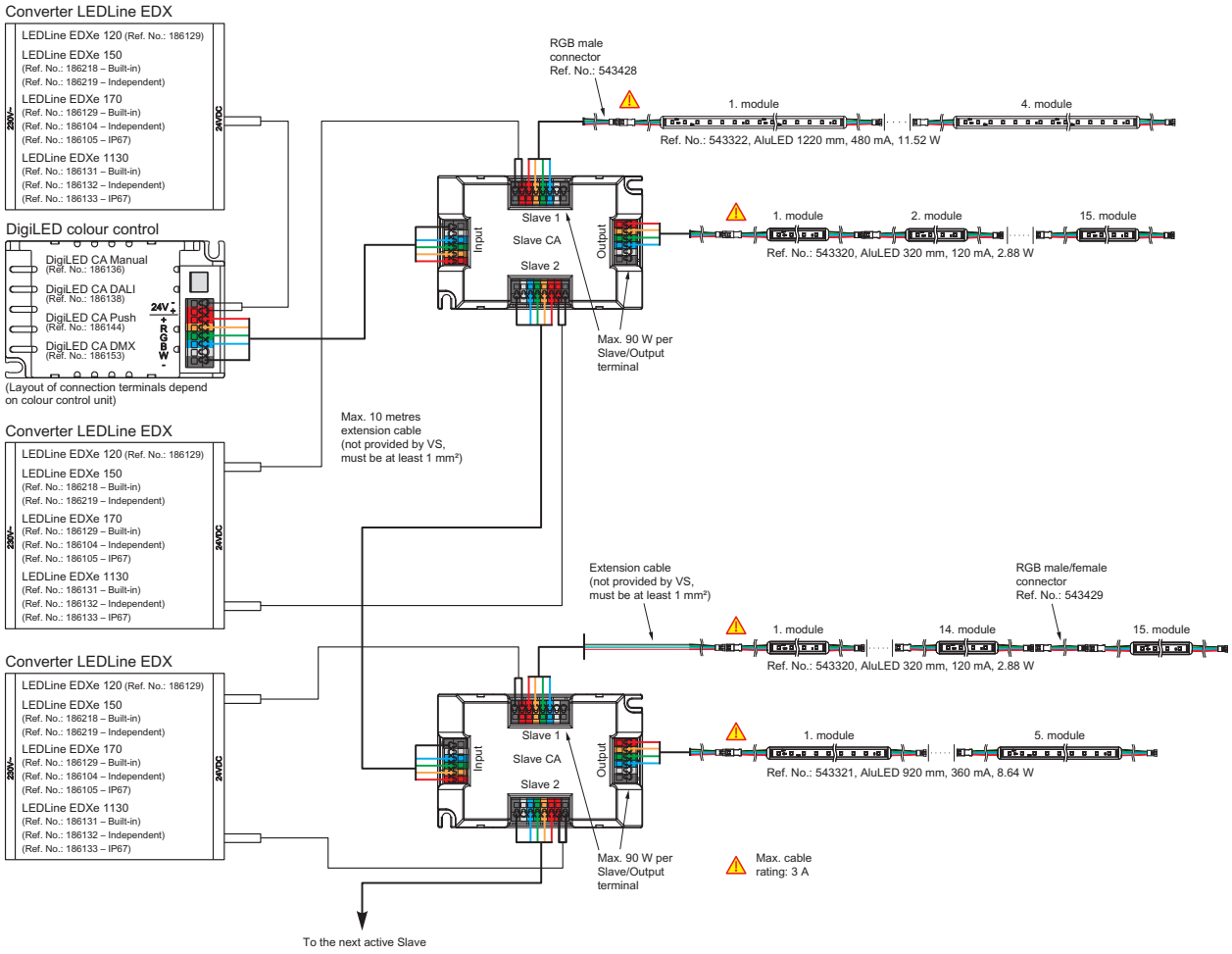


| RGB modules | | | | | |
|---|---|---|---|---|---|
| Type | **Ref. No.** | Length<br>mm | Power<br>W | Current<br>mA | Max. no. of modules per output/slave |
| AluLED-320-RGB | **543320** | 320 | 2.8 | 120 | 25 |
| AluLED-920-RGB | **543321** | 920 | 8.6 | 360 | 8 |
| AluLED-1220-RGB | **543322** | 1220 | 11.5 | 480 | 6 |

Whenever an electric light goes on around the world, Vossloh-Schwabe is likely to have made a key contribution to ensuring that everything works at the flick of a switch.

Headquartered in Germany, Vossloh-Schwabe has been a member of the global Panasonic group since 2002 and counts as a technology leader within the lighting sector. Top-quality, high-performance products form the basis of the company's success.

Whether cost-effective standard components or tailor-made product developments are needed, Vossloh-Schwabe can satisfy even the most diverse market and customer requirements. Vossloh-Schwabe's extensive product portfolio covers all lighting components: LED systems with matching control gear units, OLEDs and state-of-the-art control systems (LiCS) as well as electronic and magnetic ballasts and lampholders.



A member of the Panasonic group Panasonic

**Vossloh-Schwabe Deutschland GmbH**

Hohe Steinert 8 · 58509 Lüdenscheid · Germany
Phone +49/23 51/10 10 · Fax +49/23 51/10 12 17

**www.vossloh-schwabe.com**

VOSSLOH SCHWABE

All rights reserved © Vossloh-Schwabe
Photos: istock.com
Specifications are subject to change without notice
AluLED GB 06/2013