VOSSLOH SCHWABE



LED System by Vossloh-Schwabe

LED Lighting for Retail Environments

PERFECT LIGHTING



ADVANTAGES OF LED LIGHTING

- **LONG SERVICE LIFE**
- **LOW ENERGY COSTS DUE TO HIGH LUMINOUS EFFICIENCY**
- **HIGH CRI VALUE**
- **LIGHTING THAT IS GENTLE ON PRODUCTS (IR- AND UV-FREE)**
- **EASILY DIMMABLE**
- **INSTANTANEOUS LIGHT (LIKE INCANDESCENT LAMPS)**



Light as a Marketing Tool

The products we buy have long included much more than just the bare essentials: cosmetics promise beauty, clothes reflect lifestyle and a preference for organic foods is an expression of an individual's outlook on life. In today's world, shopping is an emotional experience.

Lighting plays a major role in shaping this affective experience; getting it right will enhance the wellbeing of both customers and staff. Good lighting does far more than just ensure good product visibility and let customers get their bearings when they enter a retail environment. It also helps to create a limitless array of retail settings, each of which has the power to positively shape a customer's personal shopping experience.

Harnessing the sales-promoting effect of light can therefore yield decisive competitive advantages for any kind of retail environment, whether large department store or exclusive designer boutique.

Well-lit shop façades and attractive window displays are like magnets to passers-by. In fact, the more such displays set themselves apart from their surroundings, the more likely they are to draw public interest. Studies into the subject have returned conclusive evidence that shop windows send a powerful marketing message. The brighter the window display is, the more appealing it will be to passers-by. For example, while only five out of 100 people will stop to look at a window with a lighting level of only 180 lux, this figure increases considerably to 25 out of 100 people if the window is brightly illuminated at 2000 lux.

Furthermore, an attractive and well-lit entrance area sends out a welcoming invitation to window shoppers to enter into the retail experience and become in-store browsers. An appealing display of merchandise is naturally equally important. Apart from showcasing quality, a successful product presentation will ideally define the store's image and trigger a positive emotional response in customers. Light is an excellent means of communicating this kind of intangible marketing message.

From the shop front and entrance area to product displays and changing rooms, light is an omniscient feature of retail environments – which is why it is so crucial to choose the right kind for each retail setting.





Light for Every Retail Area

A shop window is like a store's business card and as such must be eye-catching and appealing with dynamic lighting that brings the display to life. Lighting technology that combines a high degree of luminous efficiency with excellent CRI values is perfect for this purpose.

Ideally, it should be possible to integrate basic in-store lighting into the architecture of the building, with brightness levels adjusted to suit the type of shop. In discount and DIY stores, for instance, lighting is generally bright and cost-efficiency key, but exclusive stores tend to go for a more muted lighting effect. This basic level of lighting must ensure good visibility and enable in-shop orientation.

Brighter accent and effect lighting is used to create the desired retail ambience and focus shoppers' attention on special campaign areas. It serves to emphasise the structure, texture and colours of product displays.

Illuminated with brilliant high-CRI light, glass showcases are great for presenting high-end products and underscoring the exclusive nature of displayed merchandise.

Providing suitable lighting for fitting rooms in fashion stores is particularly important as this is where a customer will decide whether or not to buy a product. Good all-around lighting with superior CRI values is therefore vital for this important shop area.



STAGING YOUR RETAIL SPACE – WITH LIGHT





The Sales-Promoting Effect of Light

The specific photometric properties typical of today's high-pressure discharge and compact fluorescent lamps are particularly suitable for the purpose of creating successful product presentations. The newer generation of LED lighting technology delivers the same properties and many additional advantages that help to optimise in-shop lighting.

For instance, given identical colour temperatures and CRI values to those provided by other lighting options, LEDs both ensure greater visual comfort and more faithfully portray the colours of illuminated products. An appropriate LED module is available for every application.

Whereas neutral white light ranging between 3700 and 4000 K is particularly good for presenting fashion items, light with a chromaticity that tends towards the red end of the spectrum and a colour temperature of 4000 K is best for making food-stuffs like meat and fish look more appetizing. Bakery products, however, are at their most enticing if illuminated at a colour temperature of 2700 K.

LED lighting is free from any harmful UV or IR radiation that could impair fresh produce or cause it to spoil more quickly. UV light, for instance, makes colours in textiles fade and IR radiation causes unwanted heating in refrigerated display counters. The IR-free light produced by the LED module can therefore considerably lower energy consumption and enable savings of up to 30%.

In addition to this, maintenance costs are reduced due to the long 50,000-hour service life of LED lighting. Along with the reduced energy consumption, this ensures any lighting system will deliver a fast ROI.

Furthermore, LEDs are resistant to vibrations, provide instantaneous light without a warm-up phase and are easy to dim – all of which open up additional options for creating exciting, well-lit sales areas.

The compact dimensions of the LED modules facilitate the design of smaller and more stylish luminaires.

A Comparative Look at LED Lighting

LED modules are used for the most diverse applications in the field of retail lighting, e.g. shop windows, refrigerated display counters or vending trucks at weekly markets. The rapid pace of technological progress is giving rise to new application options on a daily basis.

The table below details the many advantages that LEDs offer in comparison to conventional lighting solutions:

Quality Feature	**Metal Halide Lamps** (e.g. Ceramic metal halide) 35 W	**Compact Fluorescent Lamps** (e.g. TC-TEL) 32 W	**LEDs** (e.g. VS LED series) 30 W	**Comments**
Luminous flux, lamp (lm)	2800	2400	3000	Comparable
Luminous flux, luminaire (lm)	2380	2280 (–5%)	3000 +	Losses caused in luminaires with metal halide lamps by front luminaire covers (–10%) and rearward light radiation of the lamp (–5%) **>> LEDs only radiate light to the front**
Lamp output (W)	39	32	30 +	Lower energy costs **>> LED efficiency will continue to increase in the future**
Service life (h)	15,000	10,000	50,000 ++	Reduction of maintenance costs **>> LEDs very rarely need replacing**
Luminous efficiency (lm/W)	61	65	100 ++	Lower energy costs **>> LED efficiency will continue to increase in the future**
CRI (R_a)	80...95	82 (R_a 8)	80...95	Comparable
Requires closed luminaire casing for operation	Yes	No	No +	More freedom for luminaire design; a glass cover at the front of a luminaire reduces light output by up to 10% **>> Easy lamp replacement and low loss of light**
IR radiation (heat radiation)	Yes	No	No +	No heat radiation to impair products, especially important for refrigerated display counters **>> Lower operating costs for refrigeration and air conditioning equipment due to less heat generation within the shop**
UV radiation (if yes, requires UV-absorbing glass pane)	Yes	Yes (low)	No ++	No UV radiation to impair products, especially important for textiles **>> Not having to protect products against discolouration saves costs**
Lamp ignition required (direct start impossible)	Yes	Yes (short start-up phase)	No ++	No dark phase when light is switched on; important when it comes to brief fluctuations in mains supply which can cause a lamp to switch off **>> Instantaneous light**
Lamp replacement (careful handling of the lamp required; use of gloves)	Yes	No	No +	Simpler handling of the luminaire lowers maintenance costs **>> No need to replace lamps due to long service life of LEDs**
Safety Extra-Low Voltage (SELV luminaire)	No	No	Yes ++	In accordance with the relevant standards, fewer measures needed to ensure protection against accidental contact **>> Simple luminaire construction**
Low self-heating of the lamp	No	Yes	Yes +	During standard operation, LED luminaires generate temperatures of typ. 65 °C. **>> Gentle on products and lower energy consumption due to minimal self-heating**
Easy to dim	No	Yes	Yes +	Electronic dimming via the operating current **>> LEDs can be dimmed upwards of nearly 0% to 100% without changing the colour temperature**
Shock- and vibration-resistant	No	Yes	Yes +	Lamps can be damaged due to mechanical impact (or vibrations), e.g. in vending trucks or suspended ceilings **>> LEDs are shock- and vibration-resistant**
Suitable for DC operation	No	No	Yes ++	Permits quick changeover to central battery operation **>> No lamp re-ignition time to take into account**
Suitable for low ambient temperatures	No	No	Yes ++	Ambient temperature affects the brightness of the lamp **>> The efficiency of LEDs increases at low ambient temperatures**

LED MODULES FOR RETAIL ENVIRONMENTS



LED module family

Vossloh-Schwabe's new built-in LED system for retail lighting

LED technology delivers many advantages:

- Instantaneous light: no delay on being switched on nor a warm-up phase following disconnection from the mains
- Gentle on products: UV- and IR-free
- Longer lamp service life: up to 50,000 hours
- Easily dimmable for fast changes of lighting scenes
- Colour temperatures to suit every product group: clothing, meat, sausages, cold cuts, fish, vegetables, etc.
- True-colour displays: excellent CRI values to suit the product type
- Negligible drop in luminous flux during the lamp's service life, removing the need to replace lamps
- Extremely energy-efficient
- Simple luminaire construction with maximum safety guaranteed by safety extra-low voltage (SELV)

LED module's performance is not just restricted to retail lighting. For instance, the system is equally suitable for use in reflector luminaires, flat downlights, façade lighting and pendant luminaires in which the LED driver is not integrated into the LED module, but is installed in a separate unit. This makes the LED module suitable for the most diverse applications, including domestic lighting.

HIGHLY VERSATILE TO SUIT ANY APPLICATION

Powered by constant current, the LED module at the heart of the LED module system is available in different luminous flux packages (2000 to 5500 lm) and various colour temperatures (2700 to 4000 K). In addition, the compact module is very flat and measures only 50 mm in diameter or 46.2×44.8 mm.

➲ Simple installation and slim-line luminaire designs

The lamp's low installation depth and flat geometry enable very slim-line luminaire designs since the module can be mounted directly on top of heat-dissipating surfaces.

➲ One luminaire design to suit various lighting needs

Featuring a single internal structure and identical dimensions for easy module exchange within the luminaire, LED module is available in various colour temperatures. As a result, lighting can be easily tailored to suit the respective application (food/non-food).

➲ Independent control gear for luminaires with remote technology

Independent control gear makes it possible to use greater cable lengths between the driver and the LED module, thus enabling smaller, slimmer luminaire designs with remote technology.

HIGHEST OPERATING SAFETY

LED module is operated using safety extra-low voltage (SELV). Fewer measures are therefore required to ensure protection against accidental contact and compliance with relevant standards.

➲ For simpler luminaire construction





HIGHEST DEGREE OF THERMAL SAFETY
Thermal protection circuitry ensures the operating current is reduced should the temperature at the tc point attain a critical value.

➲ Reduction of Failure Rate
Optimised heat dissipation and thermal protection circuitry ensure components are subjected to less thermal stress, which minimises the failure rate and prolongs the service life of the module.

SUPERIOR MECHANICAL STABILITY
LED module is shock- and vibration-resistant. Three mounting points in the form of metal bushings permit safe and reliable mounting of the module, with the components ideally protected by the plastic casing. In addition, the metal bushings enable optimum connection of a heat sink.

MADE FOR EASE OF USE
LED module is fitted with push-in terminals for releasable connecting cables.

➲ Installation- and user-friendly
Push-in terminals make installing and exchanging modules considerably faster and easier.

TESTED FOR SAFETY
LED modules will be VDE-approved in accordance with EN 62031, the relevant safety standard.

➲ Simplification of the luminaire approval process
Considerably easier luminaire approval in accordance with EN 60598.

SAFE OPERATION THANKS TO ELECTRONIC DRIVERS MADE BY VOSSLOH-SCHWABE
Provided with either a compact plastic or metal casing, VS' electronic LED drivers ensure the respective LED module is supplied with the correct operating current of either 700 or 1050 mA. These LED drivers feature high-quality components and are available in standard and dimmable (DALI) versions.

➲ VS' LED control gear is suitable for emergency power operation
In addition, the control gear units can also be powered using direct current. In the event of an electricity cut, a battery can therefore be used to temporarily power the lighting system.

FURTHER INFORMATION
On request we can put you in contact with manufacturers of reflectors, heat sinks and fans that are suitable for use with the LED module system.

Further recommendations on dimensioning heat sinks and other technical specifications can be found at our website:
➲ www.vs-optoelectronic.com



Technical notes of LED modules

- Dimensions WU-M-431/432: Ø 50 mm
  Dimensions WU-M-437: 46.2x44.8 mm
- Use of external LED constant current driver
- Temperature fail-safe circuit (activation temperature: $t_c \approx 105$ °C)
- On-board push-in connector

Typical light distribution curve

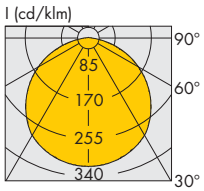

Mechanical Dimensions

WU-M-431

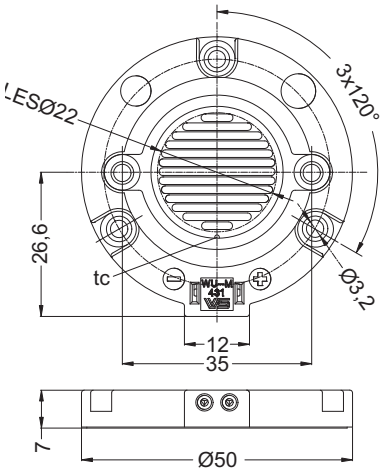

WU-M-432

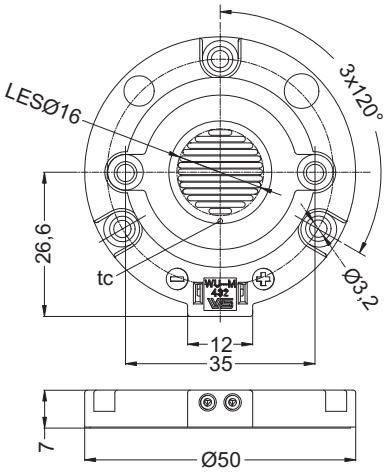

WU-M-437

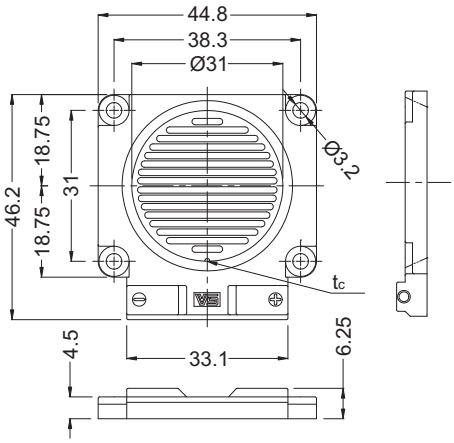





Electrical characteristics

at PCB temperature t_c = 65 °C

Type	Ref. No.	Colour	Number of LEDs	Max. current per module	Typ. voltage DC*			Typ. power consumption*		
					350 mA	700 mA	1050 mA	350 mA	700 mA	1050 mA
				mA	V	V	V	W	W	W
WU-M-431	**Alle Typen**	warm white/ neutral white	120	1050	41.7	43.8	44.6	14.6	30.7	46.8
WU-M-432	**Alle Typen**	warm white/ neutral white	60	700	28	29.6	not allowed	9.8	20.7	not allowed
WU-M-437	**Alle Typen**	warm white/ neutral white	216	1050	–	50.4	52.7	–	35.3	55.3

Use of external LED constant current driver with max. 750 mA or with max. 1050 mA required.

Optical Characteristics

at t_c = 65 °C

Type	Ref. No.	Colour	Correlated colour temperature	Luminous flux* at 350 mA		700 mA		1050 mA		Typ. radiation angle (°)	Typ. CRI** R_a
			K	min.	typ.	min.	typ.	min.	typ.		
WU-M-431-2700K	**548381**	warm white	2700 -75/+125	1468	1600	2666	2908	3519	3825	120	82
WU-M-431-3000K	**548382**	warm white	3000 -75/+165	1509	1681	2736	3070	3605	4006	120	82
WU-M431-4000K	**548383**	neutral white	4000 -215/+185	1559	1732	2834	3150	3719	4140	120	82
WU-M-432-2700K	**548384**	warm white	2700 -75/+125	927	1018	1648	1793	not allowed	not allowed	120	82
WU-M-432-3000K	**548385**	warm white	3000 -75/+165	958	1079	1687	1884	not allowed	not allowed	120	82
WU-M-432-4000K	**548386**	neutral white	4000 -215/+185	998	1109	1745	1947	not allowed	not allowed	120	82
WU-M-437-2700K	**548826**	warm white	2700 -75/+125	–	–	3524	3838	4809	5234	120	82
WU-M-437-3000K	**548827**	warm white	3000 -75/+165	–	–	3615	4020	4928	5481	120	82
WU-M-437-4000K	**548828**	neutral white	4000 -215/+185	–	–	3737	4152	5096	5669	120	82

Preliminary data

* Measurement tolerance of luminous flux: ± 7% | Emission data at t_c = 65 °C

** CRI R_a > 90 on request

Minimum order quantity: 100 pcs. per LED module

Maximum ratings

Exceeding the maximum ratings can lead to reduction of lifetime or destruction of the modules.

Type	Operation temperature range at t_c-point		Storage temperature range		Max. permitted output voltage of operating device
	°C min.	°C max.	°C min.	°C max.	V
All types	0	+85	-40	+85	60

Operating life

t_c = 65 °C

Lumen maintenance	WU-M-431		WU-M-432	WU-M-437
	I_F 700 mA	I_F 1050 mA	I_F 700 mA	I_F 1050 mA
L90/B10	50,000 h	37,000 h	40,000 h	50,000 h
L80/B10	60,000 h	50,000 h	50,000 h	60,000 h

This value does not refer to the colour temperature.

OPERATING DEVICES AND ACCESSORIES



Operating Devices for LED Module System

Mains voltage: 220–240 V ±10%
Mains frequency: 0 Hz, 50–60 Hz
SELV equivalent

Constant current drivers
700 mA and 1050 mA
Type: ECXe 700.022
Current output: 700 mA
Voltage output: 20–57 V
Power: 40 W
Ref. No.: 186200
Type: ECXe 1050.021
Current output: 1050 mA
Voltage output: 20–57 V
Power: 60 W
Ref. No.: 186198

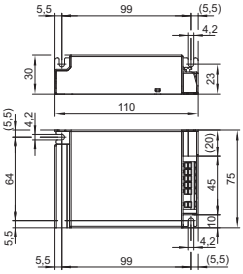



Dimmable constant current drivers
700 mA and 1050 mA – DALI
Type: ECXd 700.017
Current output: 700 mA
Voltage output: 9–48 V
Power: 34 W
Ref. No.: 186177
Type: ECXd 1050.020
Current output: 1050 mA
Voltage output: 20–57 V
Power: 60 W
Ref. No.: 186196

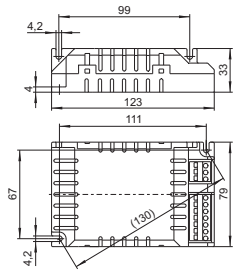







Accessories for LED Module System

Thermal conductive graphite tape
Thermal resistance: $R_{th} \leq 0.04$ K/W
Type: Thermal tape Ø 47.2 mm Graphite
Ref. No.: 549501 for WU-M-431/432
Type: Thermal tape 42x40.7 mm Graphite
Ref. No.: 549502 for WU-M-437

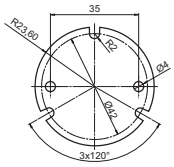

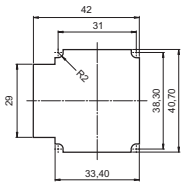

Manufacturers of reflectors for the LED module system

ACL-Lichttechnik GmbH
www.reflektor.com

Alux-Luxar GmbH & Co. KG
www.alux.de

JORDAN REFLEKTOREN GmbH & Co. KG
www.jordan-reflektoren.de

Heat sinks with active cooling for the LED module system

Nuventix, Inc.
www.nuventix.com

Sunon
www.sunon.com

AVC
www.avc-europe.eu

Heat sinks with passive cooling for the LED module system

ALPHA-Numerics GmbH
www.alpha-numerics.de

Fischer Elektronik GmbH & Co. KG
www.fischerelektronik.de

Frigo Dynamics
www.frigodynamcs.com

Fans for the LED module system

ebn-papst Mulfingen GmbH & Co. KG
www.ebmpapst.com

Sunon
www.sunon.com

AVC
www.avc-europe.eu

Whenever an electric light goes on around the world, Vossloh-Schwabe is likely to have made a key contribution to ensuring that everything works at the flick of a switch.

Headquartered in Germany, Vossloh-Schwabe has been a member of the global Panasonic group since 2002 and counts as a technology leader within the lighting sector. Top-quality, high-performance products form the basis of the company's success.

Whether cost-effective standard components or tailor-made product developments are needed, Vossloh-Schwabe can satisfy even the most diverse market and customer requirements. Vossloh-Schwabe's extensive product portfolio covers all lighting components: electronic and magnetic ballasts, lampholders, state-of-the-art control systems (LiCS), LED systems with matching control gear units as well as OLEDs.



A member of the Panasonic group Panasonic

Vossloh-Schwabe Deutschland GmbH

Hohe Steinert 8 · 58509 Lüdenscheid · Germany
Phone +49/23 51/10 10 · Fax +49/23 51/10 12 17

www.vossloh-schwabe.com

VOSSLOH SCHWABE

All rights reserved © Vossloh-Schwabe
Photos: istock.com
Specifications are subject to change without notice
LED Shop COB GB 03/2012