THE PERFECT REPLACEMENT

CONVENIENT LED TECHNOLOGY





LEDSPOT SETS FOR GENERAL AND FURNITURE LIGHTING

As the perfect replacement for low-voltage halogen lamps, the new LEDSpots made by VS are ideal for use in furniture, suspended ceilings as well as cooker hoods in kitchens.

The LED modules are available with either one or three High Power LEDs and semi-transparent optics attachments. The circular or square metal frame is available in a white, silver, matt silver or gold finish. Furthermore, flexible snap-in fasteners make it extremely easy and quick to exchange halogen spots, which are still in widespread use.

The package is rounded off by a matching LED driver housed in a compact VS LiteLine transformer casing plus a set of cables with pre-assembled plugs for connecting up to five spots.

Key system facts

LED-SPOTS
With 1 or 3 High Power LEDs with pre-assembled optics attachments – also ideal for combined use

COLOUR TEMPERATURES
From warm white (2700 °K) to cool white (6200 °K)

METAL FRAMES
Circular or square with various surface finishes

SNAP-IN FASTENERS
For quick and easy installation

COMPLETE SET OR SINGLE COMPONENTS
Available either individually or as a complete set featuring LEDSpots, plug-in connector and constant current driver

VOSSLOH SCHWABE

A Member of the Panasonic Group Panasonic

Vossloh-Schwabe Deutschland GmbH · Hohe Steinert 8 · 58509 Lüdenscheid · Germany · Phone +49 23 51/10 10 · Fax +49 23 51/10 12 17 · www.vossloh-schwabe.com

LEDSpot with heat sink



For cut-out: Ø 56 mm
Number of LEDs: 1 LED with heat sink
for optimal thermal management
Metal frame: steel
Leads: Cu tinned, stranded conductors 0,5 mm², PVC insulation, length: 100 mm, with connector
Snap-in clips for easy installation
Degree of protection: IP40

Lead set for 1, 2, 3 or 5 LEDSpots are also available (see p. 5)

Electrical characteristics

at ambient temperature t_a = 25 °C

Type	Ref. No.	Voltage DC (V) at 350 mA		Power (W)	
		typ.	max.	typ.	max.
LCH-004	**All XP-E types**	3.20	3.90	1.12	1.37

Use of external LED constant current driver with max. 350 mA required.

Optical characteristics

at junction temperature t_j = 25 °C

Type	Description	LEDSpot version	LED type	Colour	Correlated colour temperature K	Luminous flux (lm) at 350 mA min.	typ.	Radiation angle* °
With half-frosted lens ◎								
LCH-004	XP-E 3000K Min. Q2 LENS HAL	**A**	XP-E	warm white	2870...3200	74.3	82.5	100
LCH-004	XP-E 6300K Min. R2 LENS HAL	**B**	XP-E	cool white	5650...6950	96.9	107.1	100

* On account of the complex manufacturing process of the modules the above values only represent statistical variables. The values do not necessarily correspond exactly to the actual parameters of every single product which can vary from the typical specification.

Frame colour

(selectable)

Frame colour	Ref. No. **A** (warm white)	Ref. No. **B** (cool white)
silver	**545873**	**545875**
matt silver	**545818**	**545820**
gold	**545874**	**545876**
white	**545819**	**545821**

Operating service life

at ambient temperature t_a = 25 °C

Current mA	Operating service life* (lumen maintenance at 70%)
350	50,000 hrs.

* Operating service life was determined with a clearance of at least 60 mm over the heat sink.

Typical light distribution curve

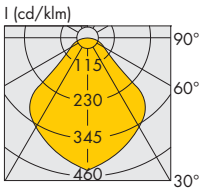

Mechanical dimensions LEDSpot

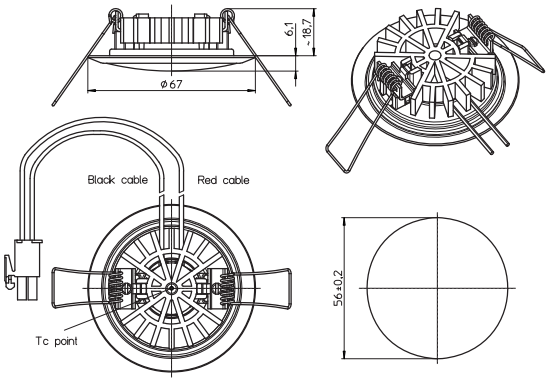

VOSSLOH SCHWABE
A Member of the Panasonic Group Panasonic
Vossloh-Schwabe Deutschland GmbH · Hohe Steinert 8 · 58509 Lüdenscheid · Germany · Phone +49 23 51/10 10 · Fax +49 23 51/10 12 17 · www.vossloh-schwabe.com

LED-TriplePowerEmitter module with heat sink



Lead set for 1 or 2 LED TriplePowerEmitter modules are also available (see p. 5)

Circular metal frame

Fixed frame for cut-out: Ø 65 mm
Tilting frame for cut-out: Ø 72 mm
Diameter of PCB: Ø 45 mm
Number of LEDs: 3 LEDs with heat sink for optimal thermal management
Metal frame: steel

Pre-assembled 40° lens
Leads: Cu tinned, stranded conductors 0.5 mm², PVC insulation, length: 100 mm, with connector
Snap-in clips for easy installation
Weight: 130/175 g

Electrical characteristics

at ambient temperature t_a = 25 °C

Type	350 mA			
	Voltage DC (V)		Power(W)	
	typ.	max.	typ.	max.
All types	9.9	11.7	3.48	4.11

Use of external LED constant current driver with max. 350 mA required.

Optical characteristics

Type	Description	**LEDSpot version**	LED type	Colour	Correlated colour temperature K	CRI R_a	Luminous flux (lm) at t_j = 25 °C 350 mA (P_{el} = 4.1 W) min.	typ.	Radiation angle °
LR3W-XR-E-WW-40°	XRE 3000°K Min P2	**A**	XR-E	warm white	2870...3200	80	181.4	217.6	40
LR3W-XR-E-W-40°	XRE 6300°K Min Q2	**B**	XR-E	cool white	5650...6950	75	236	270	40

* On account of the complex manufacturing process of the modules the above values only represent statistical variables. The values do not necessarily correspond exactly to the actual parameters of every single product which can vary from the typical specification.

Frame colour

(selectable)

Frame colour	**Circular frame; fixed LED module**		**Circular frame; tilting LED module**	
	Ref. No.	**Ref. No.**	**Ref. No.**	**Ref. No.**
	A (warm white)	**B** (cool white)	**A** (warm white)	**B** (cool white)
silver	**546552**	**546560**	**546548**	**546556**
matt silver	**546553**	**546561**	**546549**	**546557**
gold	**546554**	**546562**	**546550**	**546558**
white	**546555**	**546563**	**546551**	**546559**

Operating service life

at ambient temperature t_a = 25 °C

Current mA	Operating service life* (lumen maintenance at 70%
350	50,000 hrs.

* Operating service life was determined with a clearance of at least 60 mm over the heat sink.

Typical light distribution curve

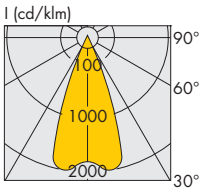

with lens 40°

Mechanical dimensions
Fixed LED module with circular frame

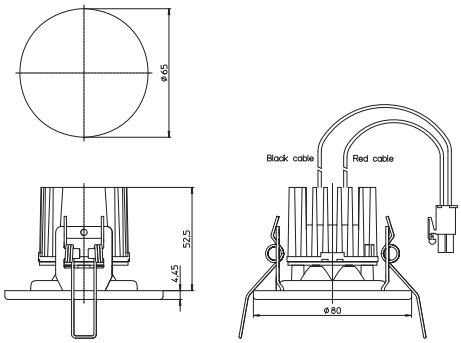

Mechanical dimensions
Tilting LED module with circular frame

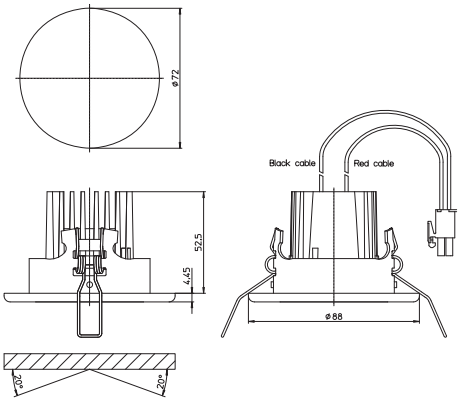

LED-TriplePowerEmitter module with heat sink



Lead set for 1 or 2 LED TriplePowerEmitter modules are also available (see p. 5)

Square metal frame

Fixed frame for cut-out: Ø 65 mm
Diameter of PCB: Ø 45 mm
Number of LEDs: 3 LEDs with heat sink for optimal thermal management
Metal frame: steel
Pre-assembled 40° lens

Leads: Cu tinned, stranded conductors 0.5 mm², PVC insulation, length: 100 mm, with connector
Snap-in clips for easy installation
Weight: 130 g

Electrical characteristics

at ambient temperature t_a = 25 °C

Type	350 mA			
	Voltage DC (V)		Power (W)	
	typ.	max.	typ.	max.
All types	9.9	11.7	3.48	4.11

Use of external LED constant current driver with max. 350 mA required.

Optical characteristics

Type	Description	LEDSpot version	LED type	Colour	Correlated colour temperature K	CRI R_a	Luminous flux (lm) at t_j = 25 °C 350 mA (P_{el} = 4.1 W) min.	typ.	Radiation angle °
LR3W-XR-E-WW-40°	XRE 3000°K Min P2	**A**	XR-E	warm white	2870...3200	80	181.4	217.6	40
LR3W-XR-E-W-40°	XRE 6300°K Min Q2	**B**	XR-E	cool white	5650...6950	75	236	270	40

* On account of the complex manufacturing process of the modules the above values only represent statistical variables. The values do not necessarily correspond exactly to the actual parameters of every single product which can vary from the typical specification.

Frame colour

(selectable)

Frame colour	Square frame; fixed LED module	
	Ref. No. **A** (warm white)	**Ref. No.** **B** (cool white)
silver	**547241**	**547246**
matt silver	**547242**	**547247**
gold	**547243**	**547248**
white	**547244**	**547249**

Operating service life

at ambient temperature t_a = 25 °C

Current mA	Operating service life* (lumen maintenance at 70%
350	50,000 hrs.

* Operating service life was determined with a clearance of at least 60 mm over the heat sink.

Typical light distribution curve

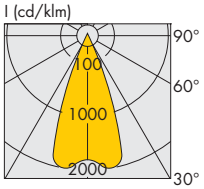

with lens 40°

Mechanical dimensions
Fixed LED module with square frame

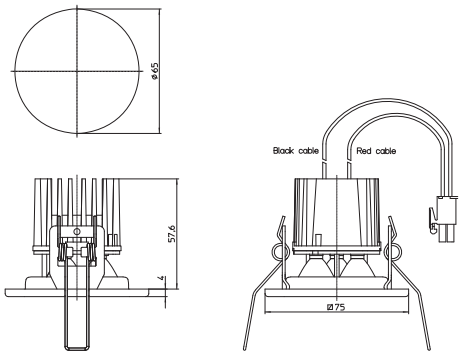

Lead sets



For LEDSpots

Lead sets with connector
for easy and fast connection
Connector material: PA, natural, UL94V-0
Leads: Cu tinned, stranded conductors 0.5 mm², PVC insulation, with connector, lead ends: ferrules on bare end of core

546654

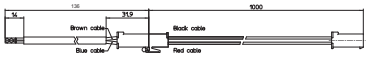

Lead sets **546388**

Weight: 18/36/58/90 g

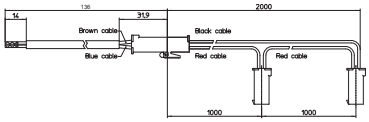

Ref. No.: 546654 with 1 connector
Ref. No.: 546388 with 2 connectors
Ref. No.: 545315 with 3 connectors
Ref. No.: 545316 with 5 connectors

545315

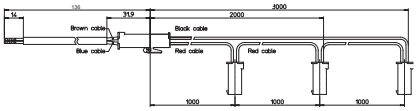

Lead sets with	LEDSpot	TriplePower-Emitter module
1 connector	X	X
2 connectors	X	X
3 connectors	X	–
5 connectors	X	–

545316

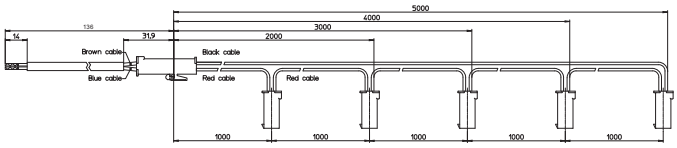

LED constant current drivers

For LEDSpots

Mains voltage: 220–240 V ±10%
Mains frequency: 0 Hz, 50–60 Hz
Electronic short-circuit protection
Overload protection
Protection against "no load" operation
Degree of protection: IP20, Protection class II
SELV-equivalent, power factor: 0.6
Screw terminals: 2.5 mm²
Quantity of screw terminals:
1x2-poles primary
1x2-poles secondary
With integrated cord grip
EN 61000-3-2, EN 55015, EN 61347-1
EN 61347-2-13, EN 61547, EN 62384

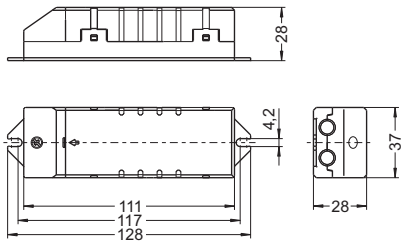



Max. output W	Type	Ref. No.	Voltage 0 Hz 50/60 Hz V	Mains current mA	Output current DC mA	Output voltage DC V	Ambient temperature t_a °C	Casing temperature t_c °C	Weight g	Max. number of modules per driver LEDSpot pcs.	Max. number of modules per driver TriplePower-Emitter (pcs.)
Dimensions: 128x37x28 mm											
11	ECXe 350mA/11W	**186157**	176/254 220/240	75/52 122/117	350 ±5%	2–32	–20 to 50	70	70	8	2

Service life time: 50,000 hrs. permanent operation when maximum $t_c$max. at t_c point will not be exceeded; failure rate: < 0.2% per 1,000 hrs.

Assembly and safety information

For LEDSpot sets

Installation and maintenance must always be performed by a qualified fitter in accordance with relevant legislation.
The following instructions must be strictly observed. Vossloh-Schwabe Deutschland GmbH accepts no liability for any possible inaccuracies during installation, any non-compliance with these instructions or for any possible omissions in this publication.

In addition, Vossloh-Schwabe Deutschland GmbH reserves the right to make modifications at any time and without prior notification. This data sheet is an integral part of the equipment and its safety devices and should therefore be kept in a safe place for easy reference. The equipment must always be disconnected from the mains prior to undertaking any maintenance work. The safety instructions on the type plate of the components must be strictly observed.

- Safe operation only possible by the use of external constant current sources.
- Power supply units must be used for operation, in which the following protective measures are ensured:
  – Short-circuit protection
  – Overload protection
  – Overheating protection
  – SELV equiv. (Safety Extra Low Voltage)
- Please ensure the correct polarity of the leads prior to commissioning. Reversed polarity can destroy the modules.
- The maximum output of the power supply must be observed.
- ESD (electrostatic discharge) protection measures must be observed when handling and installing the LED modules.
- The modules are not protected against dust or moisture. When LED modules are operated in unduly moist or dusty environments, care must be taken to ensure each module is built into a protective casing in compliance with the correct IP classification or provided with corrosion protection. Damage caused by moisture and/or corrosion will not be recognised as a material or manufacturing defect.
- Under no circumstances may downlights ever be covered by insulation material or similar.
- For optimal load of used constant current driver the LED modules can only be connected in series. The quantity of LED modules is limited by the sum of forward voltage and the capacity of used constant current driver.
  Under no circumstances may the sum of the forward bias exceed 60 V DC.
- A parallel connection of the modules is not allowed.
- Tests have shown the following chemicals to be harmful to LEDs used on the modules. It is recommended not to use the under-mentioned chemicals anywhere in an LED system. The fumes from even small amounts of these chemicals may damage the LEDs.
  – Chemicals that might outgas aromatic hydrocarbons (e.g., toluene, benzene, xylene)
  – Methyl acetate or ethyl acetate (i.e., nail polish remover)
  – Cyanoacrylates (i.e., "Superglue")
  – Glycol ethers (including Radio Shack®, Precision Electronics Cleaner – dipropylene glycol monomethyl ether)
  – Formaldehyde or butadiene (including Ashland PLIOBOND® adhesive)
  – Dymax 984-LVUF conformal coating
  – Loctite Sumo glue
  – Gorilla glue
  – Clorox bleach
  – Clorox Clean-Up cleaner spray
  – Loctite 384 adhesive
  – Loctite 7387 activator
  – Loctite 242 threadlocker
  Detailed information of handling of Cree LEDs can be found on www.cree.com.
- Photobiological safety of lamps and lamp systems; German version EN 62471:2008
  General lighting: exempt group

VOSSLOH SCHWABE
A Member of the Panasonic Group Panasonic
Vossloh-Schwabe Deutschland GmbH · Hohe Steinert 8 · 58509 Lüdenscheid · Germany · Phone +49 23 51/10 10 · Fax +49 23 51/10 12 17 · www.vossloh-schwabe.com
July, 2011