VOSSLOH SCHWABE



LiCS OUTDOOR

Lighting Control System for Outdoor Applications

ELECTRONIC CONTROL OF OUTDOOR LIGHTING





ECO-FRIENDLY AND COST-SAVING LIGHTING

The lighting solutions provided by Vossloh-Schwabe ensure that local authorities everywhere can save energy, achieve sustainable cost reductions and at the same time make a valuable contribution to reducing CO_2 output. Using various lighting situations as examples, energy savings of 30%–50% can be achieved if efficient technology is used in the right place.

This chapter presents Vossloh-Schwabe's newly developed light control systems for street lighting and lighting systems in the vicinity of buildings.

Luminaires operated in combination with magnetic and dimmable electronic ballasts that feature a 1–10 V or DALI interface can be monitored and controlled using these products. The system is suitable for both new installations as well as classic retrofits.

Without exception, all LiCS outdoor products can rightfully claim to provide the most efficient and most flexible control solutions for outdoor lighting. Vossloh-Schwabe's light management systems enable centralised control of individual luminaires with the advantage of a constant online link and the ability to monitor the lighting system. Lighting systems for which flexibility and efficiency are key, but that do not require an online connection, can benefit from the same savings potential by using the intelligent multifunctional controller units (iMCUs) in offline mode.

Typical applications

- General lighting in public spaces
- Lighting in the vicinity of buildings
- Lighting in tunnels
- Lighting for sports' venues
- Industrial lighting

LiCS OUTDOOR

Intelligent light control for outdoor applications **4**

System overview **5**

Network-capable products **6–9**
iLC – intelligent luminaire controller (built-in) 6–7
iPC – intelligent pole controller (built-in) 7
iDC – intelligent data concentrator 8
iLUX – intelligent lux meter with a power line carrier interface 9

Software **10**
iCT – intelligent configuration software 10
iLIC – intelligent luminaire information centre 10

Non network-capable products **11**
iMCU – intelligent multifunctional controller unit 11

Sensors
Further sensors for the LiCS outdoor system are currently being developed. Please contact your VS representative for further details. The VS website at **www.vossloh-schwabe.com** also provides information on the current situation.

MidNight Controller
Further controllers for the LiCS outdoor system are currently being developed. Please contact your VS representative for further details. The VS website at **www.vossloh-schwabe.com** also provides information on the current situation.

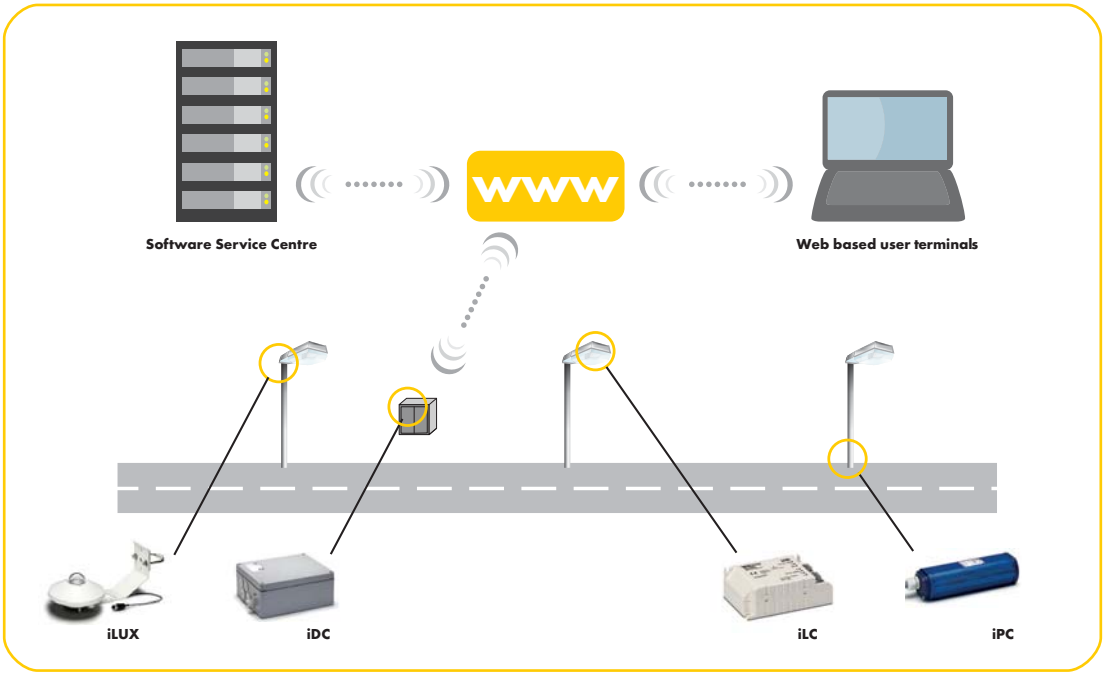

Intelligent Light Control for Outdoor Applications

Power line carrier (PLC) technology enables bidirectional data transmission via the 230-V supply voltage. Without requiring additional wiring it is therefore possible to connect these light controllers to form a powerful network using either a lighting cable or a commonly available network cable in almost any environment. Data are measured with a high degree of precision at every controller connected to the network and, if required, automatically amplified. As a result, length restrictions make no difference. Vossloh-Schwabe's LiCS Outdoor system is based on this tried-and-tested technology, which has already proved itself millions of times in the most diverse applications and fields.

Vossloh-Schwabe's LiCS Outdoor system makes it possible to dim individual luminaires or entire luminaire groups. Depending on the requirements, the degree to which the lighting level is dimmed can be sensor-controlled or can comply with a preset level; the burn-in periods of discharge lamps can also be taken into consideration.
A lighting system that provides light as required therefore results in further savings potential.
Thanks to the system's convenient remote monitoring functions, it is possible to optimise maintenance processes as well as better plan maintenance work and budget for it in more detail.

Overview of functions

Independent functions form an integral part of the LiCS Outdoor controller and are common to all products. The parameters of these functions can be (re)set at any time by the customer using various tools or via the power line carrier network.

DPC (Delayed Switching for Pedestrian Crossing)
The system can be programmed to ensure that certain lighting groups can be switched on after a specified delay or switched off earlier, but without impacting the basic lighting level required by relevant standards at, for instance, pedestrian crossings

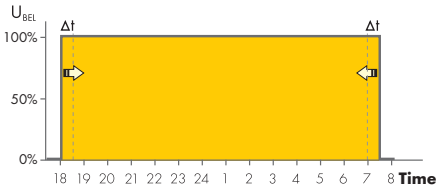

DOO (Dimmed ON/OFF)
The lighting system can be programmed to ensure the lighting level of the luminaires slowly increases to the desired brightness upon being switched on and to dim down within a certain timeframe before switching off



MFF (Maintenance Factor Function)
Maintenance factor function: reduction of the degree to which the luminous flux decreases over the service life of the light source.

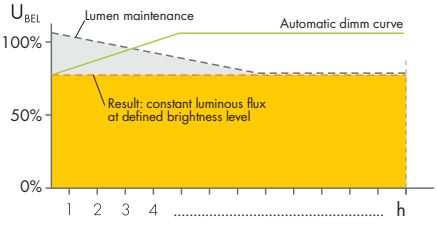

BBT (Burn-in Block Time)
Configurable dimmer block during the burn-in period of conventional light sources (can be deactivated).

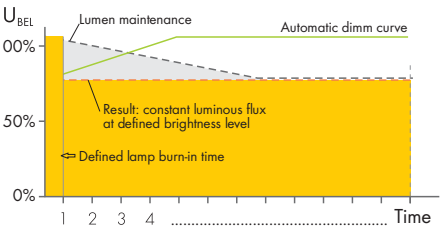

ISD (Intelligent Switching Time Dimming)
Intelligent, timer-controlled periods of dimmed light.

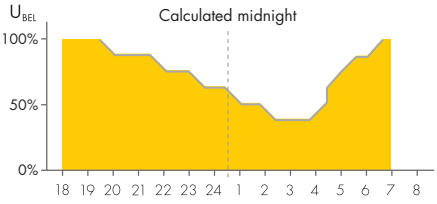

LST (Control input)
Control input with configurable behaviour and effect on the DALI/1–10 V output or the relay's two-way contact.

RCR (Ripple Control Receiver)
Sound frequency reception module for typical sound frequencies of 100 Hz to 1.7 kHz; TFR protocols on request.

Overview of the LiCS Outdoor System

Product matrix	Network-capable		Non network-capable
Software	**iLIC**	**iSITE**	–
Data concentrator	**iDC** • GPRS • IP • FO-MM • FO-SM 	**iMICO or iCTT** 	
Controller	**iLC** (for installation in luminaires) **iPC** (for installation in the luminaire pole) **iRFS** (controller) 	**iMCU** (controller) **EHXd** (electronic ballasts) **iRFS** (controller) 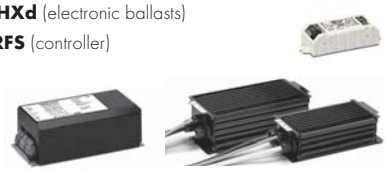	**iMCU Light Controller** for independent operation **iRFS** (controller) 
Sensors	**iLUX** (lux meter) / **iRAS** (radar sensor) 	**iRAS** (radar sensor)	**iRAS** (radar sensor) **iRFS** (wireless bridge)
Operating unit	**iSCT** (tablet) **iCTI** (hand-held operating device) 	–	–

The technical documentation for the iMICO and iCTT MidNight controllers as well as the associated iSITE software can be found online at **www.vossloh-schwabe.com**.
Please contact your VS representative for further details.

Expansion Options for the LiCS Outdoor System

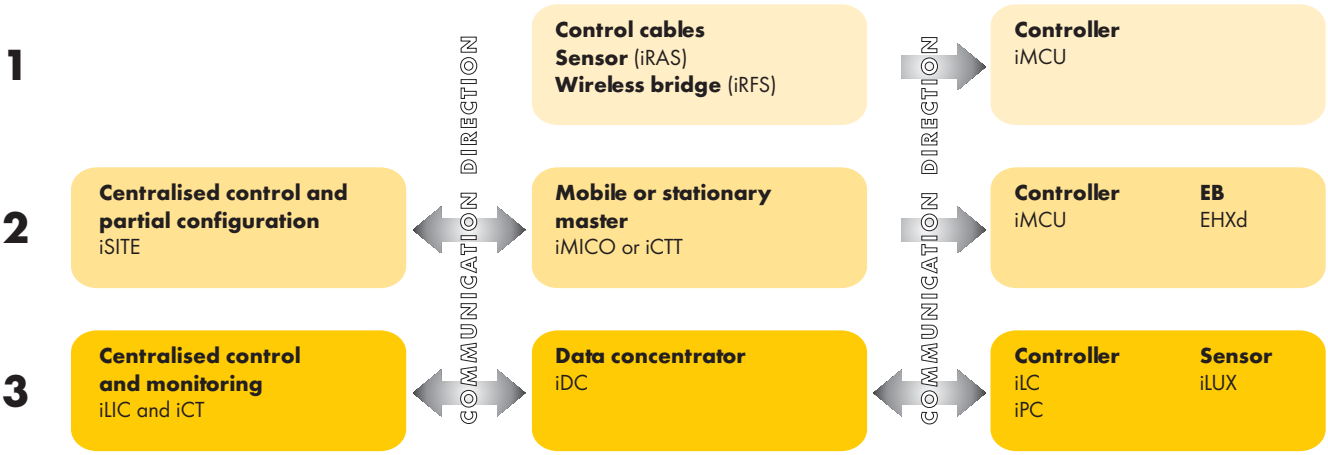

Light Control Gear for Outdoor Luminaires

Vossloh-Schwabe's outdoor light control gear works with power-line-carrier communication using the C/B CENELEC band. Thanks to the integrated functions, they can be used as independent control components or be integrated into a light management system to centrally monitor and regulate individual luminaires.

The LiCS outdoor system enables control of luminaires operated with magnetic ballasts (low-lost ballast and low-loss ballast ECO) as well as luminaires with up to four dimmable electronic ballasts with a 1–10 V or DALI interface.

The product is suitable both for new installations as well as for classic retrofits. The particularly flat design of the controller enables installation in almost all luminaires, especially luminaires featuring LED technology.

Control input L_{ST} can be used for a control phase, a motion detector, a key switch, a light sensor or, if operated independently, to receive simple protocols. Please contact your VS representative for further details.

The controller is integrated into a LON power-line-carrier light management system that requires a network connection to a central module (iDC). Communication via power line carrier occurs in accordance with standardised directives EN 14908-1, EN 14908-3 and the Lonmark® OLC profile (outdoor luminaire controller profile).

Installation and integration requires further products that are supplied in accordance with customer specifications. Once installed in a light management system, the controller delivers various performance data and status reports independently of the connected ballast. The following calibrated performance data are available within a tolerance of 1 %: voltage, current, power factor, energy consumption, lighting hours and temperature. Limits must be defined for each measured value, which are then monitored in the controller with a report being transmitted to the master system if limits are exceeded. As a result, the controller itself already intelligently monitors the luminaire.

iLC – intelligent Luminaire Controller (built-in)

This light controller was developed for installation in a luminaire. Without requiring additional wiring, it can be integrated into a light management system.

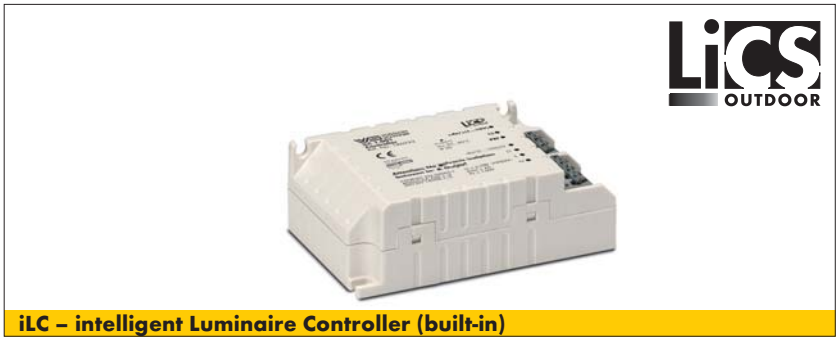

iLC – intelligent Luminaire Controller (built-in)

Technical notes

Dimensions (LxWxH): 93x58x30 mm
Control output: DALI or 1–10 V for max. 4 EBs, Short-circuit-proof
Bistable relay output: closing contact, control output ECO ballast: 10 mA for powerreduction relays
Connection terminals: 0.5–1.5 mm²
Storage temperature: –25 to 85 °C
Operating temperature: –25 to 80 °C
Humidity: non-condensing
Degree of protection: IP20, protection class I and II

Galvanic isolation

The electronic ballast does not feature potential isolation between input and output: as soon as the electronic ballast is connected to the controller, the control input of the electronic ballast is not potential-free.

Typical applications

Lighting for public spaces
Lighting in the vicinity of buildings
Lighting for tunnels

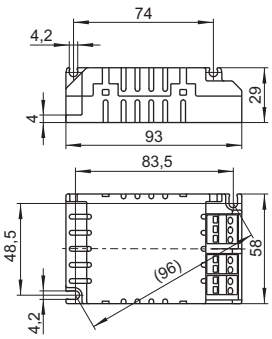

● DPC ● MFF ● ISD ● DOO
● BBT ● LST ○ RCR
(s. p. 4)

Type	**Ref. No.**	Voltage AC V, 50 Hz	Power consumption W	Control input L_{ST} V	Switching output V	Switching current A (λ = 0.8)	Weight g
iLC	**186233**	110–230	< 1,0	230	230	4	100

Operating Elements

The parameters of the iLC, iPC and the iMCU light control devices can be (re)set at any time using various tools. A hand-held operating unit is available with which the iMCU can be updated with modified parameters even without an external power supply. The parameters of the iLC and iPC controllers are set using the power line carrier via the iDC data concentrator.

Further product details are available at **www.vossloh-schwabe.com**.



iSCT **iCTI**

Type	Ref. No.	Description	Dimensions LxWxH (mm)	Weight g
iSCT	**186251**	Intelligent tablet	266x212x17	970
iCTI	**186246**	Intelligent hand-held operating device	180x65x40	200

iPC – intelligent Pole Controller (built-in)

This light controller was developed for installation in a luminaire pole. It can also be integrated into a light management system without requiring additional wiring.

Technical notes
Dimensions (LxWxH): 250x60x55 mm
Control output: DALI or 1–10 V for max. 4 EBs, Short-circuit-proof
Bistable relay output: closing contact
Control output ECO ballast: 10 mA for power-reduction relays
Connection cable: 1 m (special configurations are available on request)
Storage temperature: –25 to 85 °C
Operating temperature: –25 to 80 °C
Humidity: non-condensing
Degree of protection: IP20, protection class II

Galvanic isolation
The electronic ballast does not feature potential isolation between input and output: as soon as the electronic ballast is connected to the controller, the control input of the electronic ballast is not potential-free.

Typical applications
Lighting for public spaces
Lighting in the vicinity of buildings



iPC – intelligent Pole Controller (built-in)

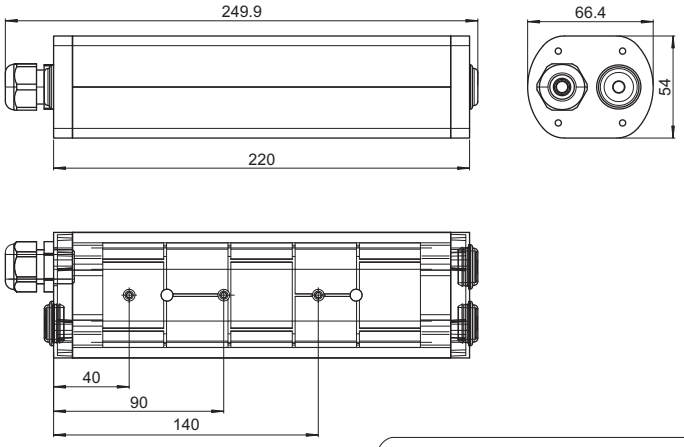

DPC **MFF** **ISD** **DOO**
BBT **LST** **RCR** (s. p. 4)

Type	Ref. No.	Voltage AC V, 50 Hz	Power consumption W	Control input L_{ST} V	Switching output* V	Switching current A (λ = 0.8)	Suitable for iLUX light sensors	For ripple-control sound frequency**	Weight g
iPC	**186234**	110–230	< 1.0	230	230	4	no	no	360
iPC-Lux	**186235**	110–230	< 1.0	230	230	4	yes	no	360
iPC-RC	**186236**	110–230	< 1.0	230	230	4	no	yes	360

* Optionally available with a second switching output on request

** Protocols on request

For ripple-control iDC – intelligent Data Concentrator

The iDC forms the master of the light management system and functions as the central connection interface to the software of the master system. The product can be programmed and also features application programs that are perfect for controlling lighting systems.

The following functions are an integral part of the product: timer programs, monitoring of limit values plus alarm function and alarm transmission, data conversion, data logging and email client.

Fitted with various interfaces such as S0 for counter registration, the M bus for remote counter reading or the MOD bus for extended sensor and actuating functions, the iDC can adapt to suit almost any control task.

The iDC also provides a very well documented, web-based XML/SOAP interface or an optionally available OPC driver (open process control) to the SCADA (Supervisory Control and Data Acquisition) system. This makes it possible to integrate the iDC also into any BA (Building Automation) or control system.

The iLIC software was specifically developed to enable control of the iDC. Various extension options are available to suit common communication requirements: GPRS, IP (CAT5), Fibre optic (FO) Single Mode, Fibre optic (FO) Multi Mode, and optionally also WLAN on request.

Technical notes

Dimensions (LxWxH): 280x230x112 mm
Material: aluminium AlSi12 (Fe)
Drill holes for cables:
- 2 PG metric fittings (25x1.5 mm)
- 2 PG metric fittings (32x1.5 mm)
- 1 PG metric fittings (20x1.5 mm)

Interfaces for power line carriers
Inputs: 2 x 30 V DC digital inputs
Optionally extendable using a cut-off relay for 230 V AC
2 impulse-counter inputs typical of S0
Outputs: 2 relay outputs 230 V AC; 10 A
Ethernet port 10/100BaseT, auto-selecting,
RS232 interface for GSM/GPRS modem
LON power line carrier communication:
Protocols: in acc. with ANSI CEA 709.1 / EN 14908-1 on the supply voltage (tri/single phase)
Transmission: in acc. with ANSI CEA 709.3 / EN 14908-3
IP communication: XML / SOAP, http, FTP, UDP
FME antenna connection: male
Storage temperature: –25 to 85 °C
Operating temperature: –25 to 60 °C
Humidity: non-condensing
Degree of protection: IP65, protection class I

Special features

The product can be commissioned using the VS iCT tool.



iDC – Data Concentrator

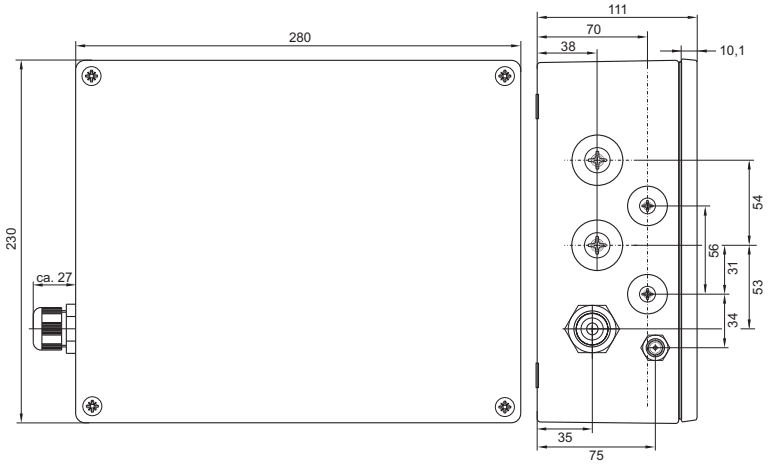

Type	Ref. No.	Voltage AC V, Hz	Average power consumption VA	Transmission mode VA	Weight g
iDC-GPRS	**186230**	230±10%, 50±1%	standby 7VA	12	4400
iDC-IP	**186237**	230±10%, 50±1%	standby 7VA	12	4400
iDC-FO-MM	**186238**	230±10%, 50±1%	standby 7VA	12	4400
iDC-FO-SM	**186239**	230±10%, 50±1%	standby 7VA	12	4400

iLUX – intelligent Lux Meter with a Power-Line-Carrier Interface

The high-quality light sensor, upgraded with a special variant of the iPC controller for installation in the luminaire pole, directly measures and delivers digital light metrics in lux to a light management system for the purpose of lighting control.

Lighting systems operated with or without a light management system can be switched on or off at a specific lux value via internal relays. The measured lux values can then be transmitted to the lighting system via the power line. Depending on the respective lighting level required in each case, it is therefore possible to independently control luminaires in different areas, e.g. at major and minor roads, pedestrian crossings and in parks.

The compact sensor can be fixed to the luminaire pole or a wall using the enclosed mounting bracket.



iLUX – Light sensor

Technical notes
Dimensions (LxWxH: 165x165x104 mm
Sensor casing: aluminium with a PC cover,
Sensor unit protected by opal glass
Connection cable to the controller: 10 m
(special configurations available on request)
Storage temperature: –25 to 85 °C
Operating temperature: –25 to 80 °C
Humidity: non-condensing
Degree of protection: IP65
Weight of mounting bracket: 300 g
For details on the casing and connections of the iPC controller (intended for installation in luminaire poles), see page 7

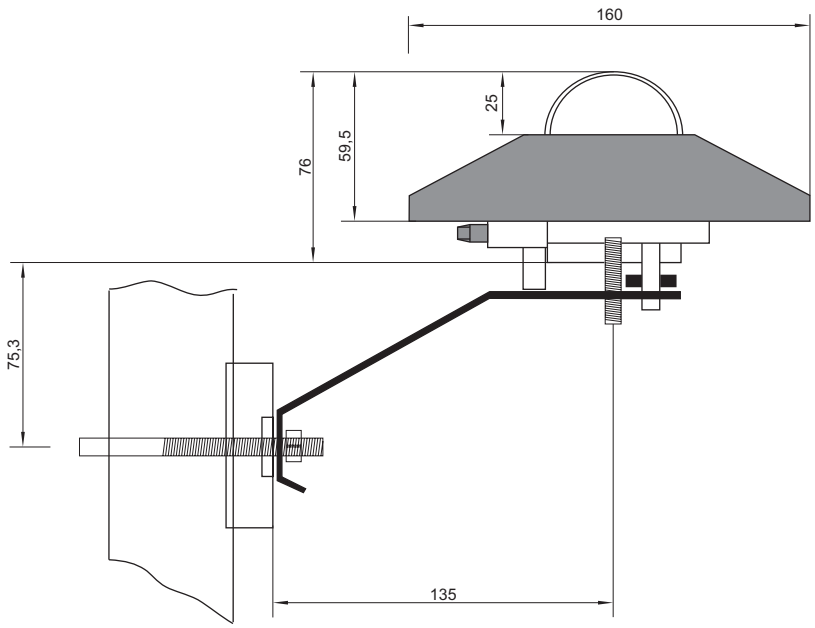

Typical applications
Lighting for public spaces
Lighting in the vicinity of buildings

Type	**Ref. No.**	Note	Weight g
iLUX	**186231**	Use only in combination with iPC-LUX (Ref. No.: 186235)	1000

iCT – intelligent Configuration Software

For outdoor luminaire control

The software was specifically developed to integrate iLC or iPC luminaire controllers in the iDC. This enables quick and convenient installation of all controllers in network segments. Commissioning can also be completed quickly by using an optional barcode scanner to read the unique barcode identification number printed on each controller. The parameters of the controllers of the individual luminaires as well as luminaire groups can be set in accordance with the OLC Lonmark® profile. The software is available only in combination with the iDC, the intelligent data concentrator.

Ref. No.: 186242



iLIC – intelligent Luminaire Information Centre

For outdoor luminaire control

The luminaire information centre is the central control instrument of a light management system. All connected luminaires can be controlled, monitored and displayed using a web-based server application.

The server-based software supports both Windows and Linux operating systems. Firefox or Internet Explorer are the frontend applications to operate, control or display the light management system. The following actions can be controlled via the software:

- Switching individual luminaires on or off ahead of defined luminaire groups
- Defining the most diverse timer settings
- Evaluation and display of the lighting system status depending on various types of error message
- Evaluation of energy consumption at individual luminaire and luminaire-group level
- Graphic display of all acquired data over time (voltage, current, power, temperature, power factor, lighting hours, ...)

Ref. No.: 186243

Based on the software design, the lighting system displays information as a tree-like structure showing city, suburb, street, luminaire or can be broken down according to other criteria. The multi-client software also makes it possible to restrict rights and functions for different people or groups of people depending on their level of authorisation.

As the software is a wholly web-based application, system maintenance can be carried out via the web (global) or can be restricted to just the company using its LAN network, all depending on the system structure. Numerous users can access the system at the same time. Optional interfaces are also available to connect to other asset management systems.



System requirements

- Server: state-of-the-art
- RAM: 4GB HD: 2TB
- CPU: min. Dual Core, depending on the scope of the project
- Operating system: XP, Windows 7, Linux, Distribution, VM operation is possible
- Data security: min. RAID 1, recommended RAID 5

iMCU – intelligent Multifunctional Controller Unit

For outdoor luminaire control

This light controller unit was specifically designed for independent operation to enable control of street lighting or lighting close to buildings.

The unit is suitable for use with luminaires operated with magnetic ballasts (low-loss ballasts and low-loss ballasts ECO) as well as with dimmable electronic ballasts that support a 1–10 V or DALI interface.

The product is suitable both for new installations as well as for classic retrofits. The controller's particularly compact design facilitates installation in almost any luminaire, especially luminaires with LED technology.

Depending on the given task, the product can replace one or more individual products. It also enables control of conventional magnetic ballasts with coil tapping points without needing any other components. The control input LST can be used to connect a control phase, a motion detector, a key switch or a light sensor, but can also be used to receive simple data protocols.

Operating units

The parameters of the iMCU can be (re)set at any time using various tools. A simple hand-held unit (which does not require an additional power supply) is available with which the installed controller can be updated with modified parameters (see page 493).

Alternatively, a Windows-based program can be used that provides extended functions for stationary applications. To suit the specific requirements of the OEM market, the controller can be supplied with software protection mechanisms. Please contact us directly for further information.

Technical notes

Dimensions (LxWxH): 83x30x19 mm
Control output: DALI or 1–10 V for max. 1 EB, short-circuit-proof
Relay contacts: potential-free (input, opener, closing contact)
Connection terminals: 0.5–1.5 mm²
Storage temperature: –25 to 85 °C
Operating temperature: –25 to 80 °C
Humidity: non-condensing
Degree of protection: IP20, protection class I and II

Galvanic isolation

The electronic ballast does not feature potential isolation between input and output: as soon as the electronic ballast is connected to the controller, the control input of the electronic ballast is not potential-free.

Typical applications

Street lighting or lighting in the vicinity of buildings

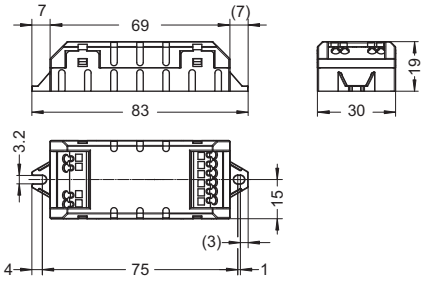



iMCU

DPC ● MFF ● ISD ● DOO ●
BBT ● LST ● RCR ○
(s. p. 4)

Type	Ref. No.	Voltage AC V, Hz	Power consumption mW	Control input LST V	Switching current A (λ = 0.8)	Weight g
iMCU	**186232**	220–230, 50	< 500	230	4	30

Whenever an electric light goes on around the world, Vossloh-Schwabe is likely to have made a key contribution to ensuring that everything works at the flick of a switch.

Headquartered in Germany, Vossloh-Schwabe has been a member of the global Panasonic group since 2002 and counts as a technology leader within the lighting sector. Top-quality, high-performance products form the basis of the company's success.

Whether cost-effective standard components or tailor-made product developments are needed, Vossloh-Schwabe can satisfy even the most diverse market and customer requirements. Vossloh-Schwabe's extensive product portfolio covers all lighting components: electronic and magnetic ballasts, lampholders, state-of-the-art control systems (LiCS), LED systems with matching control gear units as well as OLEDs.



A member of the Panasonic group Panasonic

Vossloh-Schwabe Deutschland GmbH

Hohe Steinert 8 · 58509 Lüdenscheid · Germany
Phone +49/23 51/10 10 · Fax +49/23 51/10 12 17

www.vossloh-schwabe.com

VOSSLOH SCHWABE

All rights reserved © Vossloh-Schwabe
Photos: istock.com, shutterstock.com
Specifications are subject to change without notice
LiCS Outdoor GB 10/2012