

CONNOLS-AIR

LINEAR GRILLES & REGISTERS

CONTENTS

SLIM, ATTRACTIVE & STREAMLINED APPEARANCE 4

FRAMES/BLADE STYLES, SIZES & FINISH 5

CUSTOMIZED DESIGNS & SPECIAL APPLICATIONS 8

ACCESSORIES 9

MODEL TYPES 10

STANDARD MODELS

S1100/S1115 11

S1200/S1215 12

S2200/S2215 13

REMOVABLE CORE MODELS

RS1100/RS1115 14

RS1200/RS1215 15

RS2200/RS2215 16

HINGED-TYPE MODEL RETURN AIR-GRILLES

FS1100/FS1200/FS2200 17

SPECIFICATIONS 18

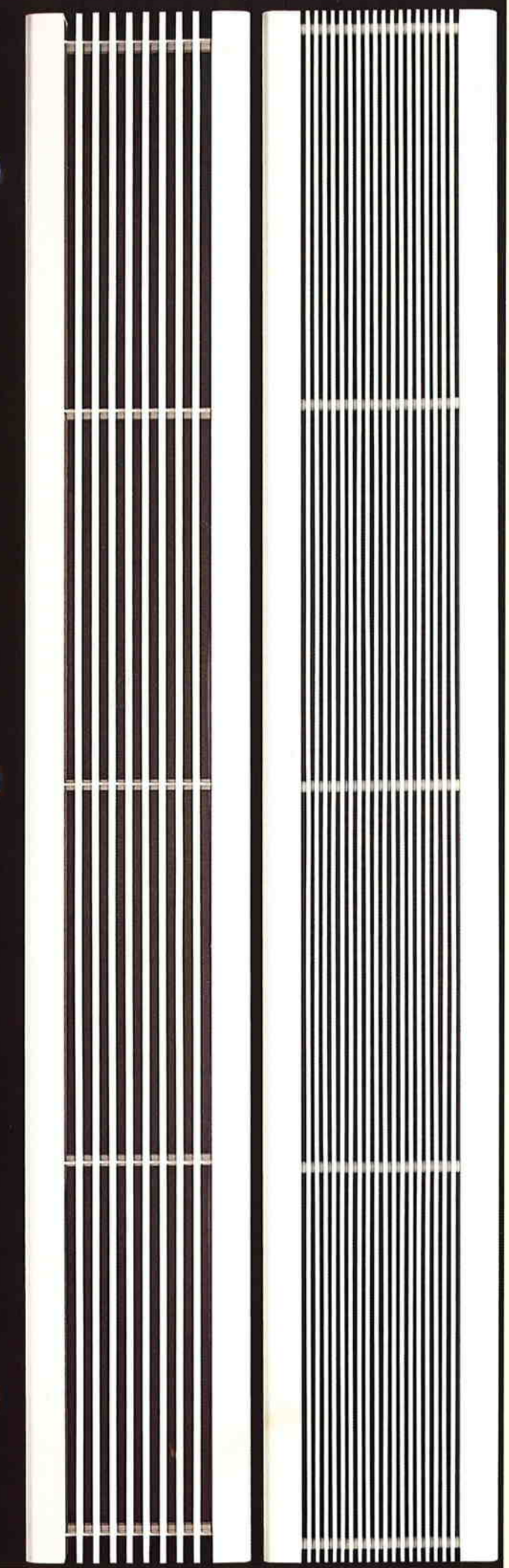

Connols-Air linear air grilles and registers are stylishly designed with a slim and streamlined look. For a pleasing and a modern appearance, they are most suitable when buildings require long and continuous linear air grilles to blend into the interiors.

Connols-Air linear air grilles are available in standard lengths ranging from 600 mm to 2400 mm, at 300 mm increments. Other lengths are available upon special arrangements with Connols-Air. For continuous installation, 2400 mm long grilles may be butted together during on-site installation with joining kits provided. The joining kits ensure neat and strong joints, creating a straight and continuous line that will not distort over time.

For corners of building interiors, mitre joints (see page 5) are available to provide a continuous installation along bending building lines. *Continue on page 8*

SLIM, ATTRACTIVE & STREAMLINED **APPEARANCE**

Frame/Blade Styles, Sizes & Finish

Frame Styles

Connols-Air linear grilles and registers are available in different frame styles, as shown on this page. Style A frames have a 17.4 mm flat face and are suitable for surface mounting. Style B frames are also suitable for surface mounting and they have a 30 mm wide face with curved edges : Style B frames are available in heights of 30 mm and 50 mm. The 50 mm style B frames are suitable for use with deflector. Style B frames are suitable for straight length installation only while Style A frames are suitable for corner installations using mitre joints as shown on this page. Style C frame can be used when regular cleaning and maintenance are required, especially for continuous run installations. The removable core frame will prevent damages to the surrounding finishes and maintain alignment of continuous run grilles. Return air grille may be used with the removable core frame so that it may be used as access to ceiling space. Grilles with Style D frames are used with concealed hinges and latches mainly for access to air filter and to the ceiling space.

FIGURE 1 : FRAME STYLES

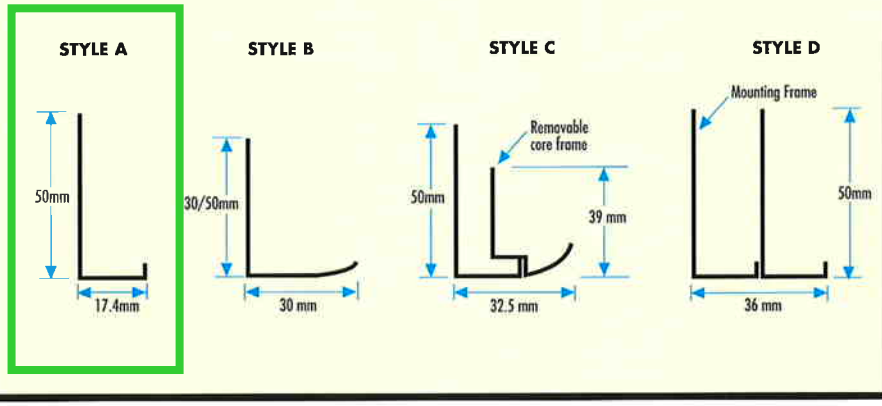

Blade Style

Connols-Air linear grilles and registers are available in 4 different blade styles:
5 mm bars with 0° deflection
5 mm bars with 15° deflection
3 mm bars with 0° deflection
3 mm bars with 15° deflection

The 15° deflection bars may be utilized to provide the necessary air deflection as a result of installation constraints as in the case where the linear grille cannot be installed near the ceiling, the air may need to be deflected toward the ceiling to achieve the Coanda Effect. Conversely, if the linear grille is installed on high wall, it may be necessary to deflect the air slightly down to achieve sufficient room residual air velocity within the occupied zone. For rooms with normal ceiling heights of about 3 meters where the linear air grilles can be installed near to the ceiling, it is not necessary to use 15° deflection bars. Linear return air grilles do not require the use of 15° deflection bars and return air performance data are available for 0° deflection bars only.

Standard Sizes

All linear grilles are supplied in standard widths of 50 mm to 600 mm for grilles with blade spacings of 12.75 mm, and 450 mm for grilles with blade spacings of 6.25mm. They are available in standard lengths of 600 mm to a maximum of 2400 mm, at 300 mm increments. Return linear grilles may be supplied in larger widths of up to

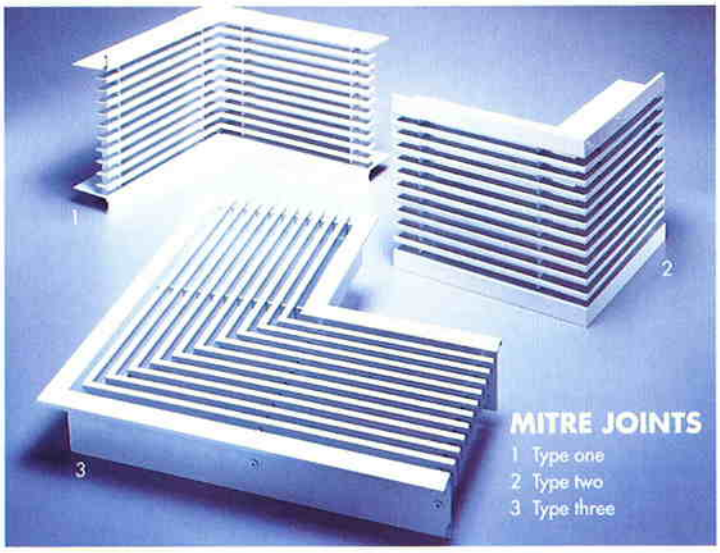

1200 mm, depending on the lengths required. However, hinged-type return linear grille will have minimum widths of 300 mm. It is recommended that our standard incremental widths be used to achieve equal spacings between blades and between blades & frames.

Finishes

Connols-Air linear grilles are available in standard baked white enamel. Other colors are available upon request. All grilles are subject to cleaning, de-oiling, phosphating before the finishing coats are applied and baked to ensure paint adhesion. Special finishes, such as stainless steel hairline or non-standard colored grilles, are also available at additional costs and longer lead-time will be required. Aluminum-opposed blade dampers for linear registers are supplied in standard mill finishes. Matt black enamel finish are also available at additional cost.

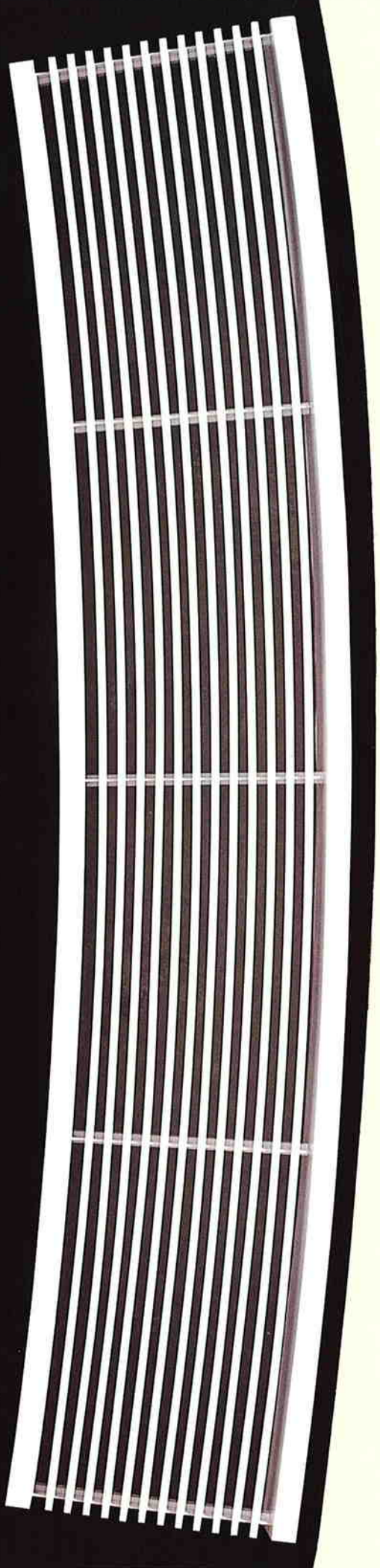

With color schemes specially selected to match the interiors, the continuous linear grilles with mitre joints can greatly enhance the interiors of building premises. Non-standard or customised designs, such as curved linear grilles, are also available upon special requests.

The supply linear air grilles and registers may be supplied with matching returns. A standard range of hinged-type linear return air grilles (with concealed latches) are also available for applications where return linear grilles may be used for access to the ceiling space or air filters. These linear return grilles are best suited for use in air-conditioning systems with fan coil units as found in most high-end residential or hotel projects. For maintenance, air filters can be removed easily from these return linear grilles for cleaning.

CUSTOMISED DESIGNS & **SPECIAL APPLICATIONS**

Accessories

Dampers

Connols-Air linear registers are fitted with extruded aluminum opposed blade damper which is adjustable from the face of the grilles without special tools. Linear grilles smaller than 150 mm may be supplied with an inexpensive steel adjustable flapped damper in matt black finish.

LINEAR REGISTER WITH FLAPPED DAMPER (Specify D1)

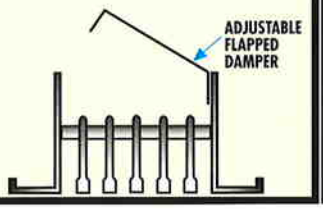

EXTRUDED ALUMINUM OPPOSED BLADE DAMPER (Specify D)



Equalizing-Thermal-Acoustic (ETA) Plenum

The supply air linear grille may be supplied with an engineered plenum designed to achieve uniform airflow across the full length of the grille. The engineered plenum is internally lined with high-density semi-rigid board to provide the required thermal insulation. The equalizer incorporated within the plenum effectively ensures uniform air distribution. As a result, pressure loss and noise generated by the linear grilles are reduced. With the equalizer and high-density insulation, the plenum provides significant noise absorption, effective in attenuating upstreamed ductbourne noise, including noise generated by throttling dampers. When ordering, specify ETA if equalizing-thermal-acoustic plenum is required. If you require non-ETA plenums, specify P.

Blank-Off

Blank-off panels may be fitted at the rear of linear grilles. They are constructed of 0.5 mm thick cold-formed steel channels in matt black finish as shown. When ordering blank-offs, specify B.

BLANK-OFF (Specify B)



Air Filter

Connols-Air standard air filters are designed for easy removal from the linear grilles during maintenance. The air filter frame is constructed of 12.5 mm extruded aluminum suitable for 6 mm thick washable filter which has a filtration efficiency of 78 % according to Ashrae 52–76. The filtered media is inserted between a layer of expanded metal and flexible wire that can be easily removed for access to the media. When ordering air filter, specify F78.

AIR FILTER (Specify F78)

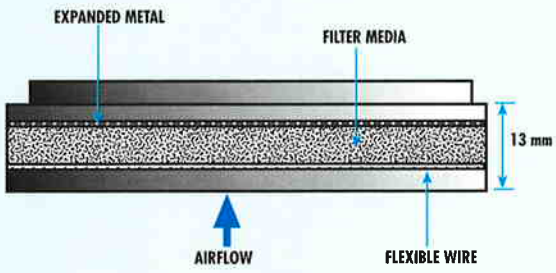

EQUALIZING-THERMAL-ACOUSTIC PLENUM (Specify ETA)

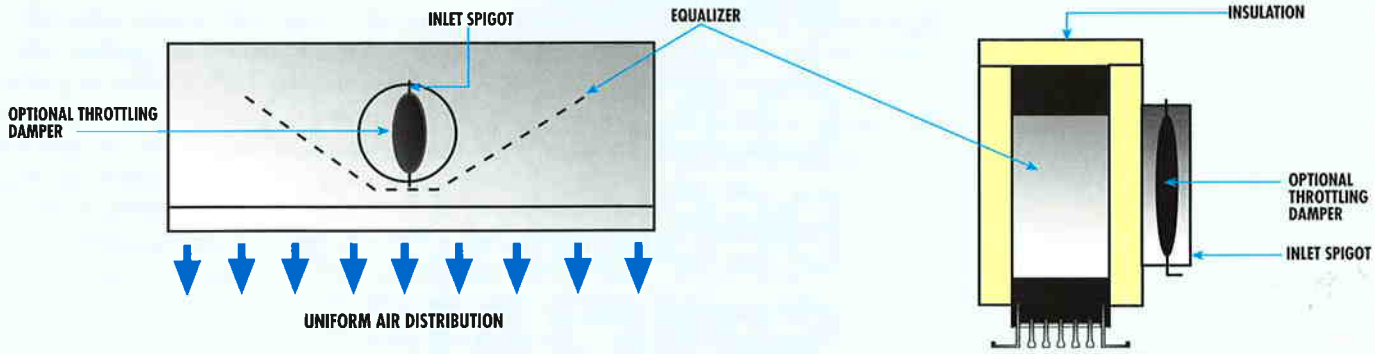

Model Types

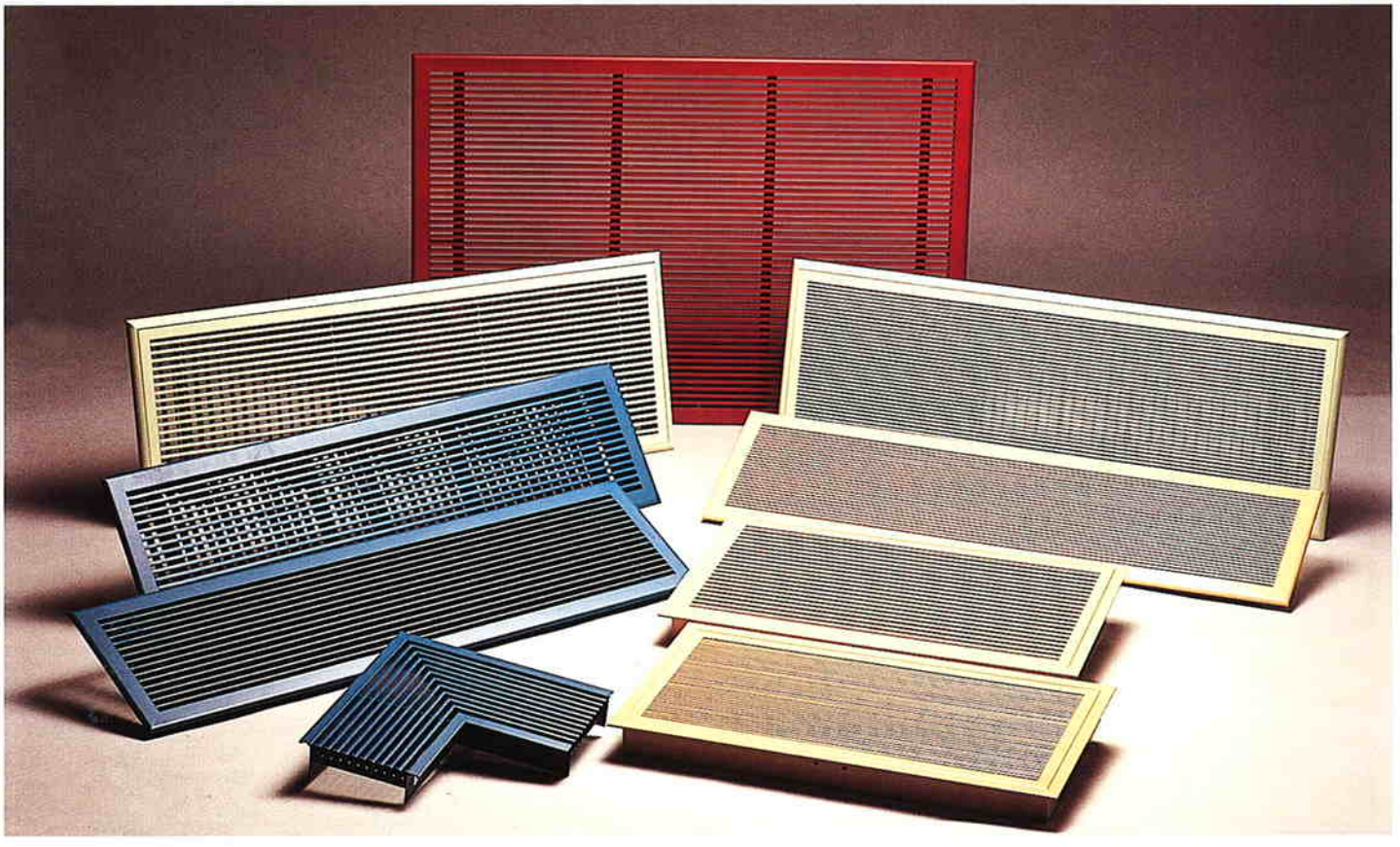

S 2200 Series
Models:
S 2200
SV 2200

S 2215 Series
Models:
S 2215
SV 2215

S 1200 Series
Models:
S 1200
SV 1200

S 1215 Series
Models:
S 1215
SV 1215

S 1100 Series
Models:
S 1100
SV 1100

S 1115 Series
Models:
S 1115
SV 1115

R 2200 Series
Models:
RS 2200
RSV 2200

R 2215 Series
Models:
RS 2215
RSV 2215

R 1200 Series
Models:
RS 1200
RSV 1200

R 1215 Series
Models:
RS 1215
RSV 1215

R 1100 Series
Models:
RS 1100
RSV 1100

R 1115 Series
Models:
RS 1115
RSV 1115

Filter Series
Models:
FS 2200
FS 1200
FS 1100

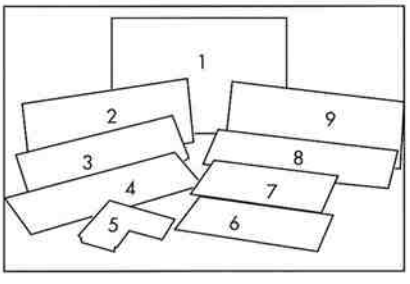

1 S2200
2 RSV2200
3 SV2200
4 S1200
5 S2200 Mitre joint
6 FS 1100
7 FS 2200
8 S1100
9 RSV 1100

To specify the model you wish to order, refer to the following chart :

MODELS

XXX X X XX

- XX: 00 – 0° bars; 15 – 15° bars
- X: 1 – 6.25 mm blade spacing; 2 – 12.75 mm blade spacing
- X: 1 – 3 mm thick bar; 2 – 5 mm thick bar
- XXX:
  - S : Standard model
  - RS : Removable core model
  - FS : Hinged model
  - SV : Standard model with deflector
  - RSV: Removable core model with deflector

Example:
S 2200 refers to linear grille with 0°, 5 mm thick bars spaced at 12.75 mm centers.

Supply and Return Air

S1100
S1115
Series



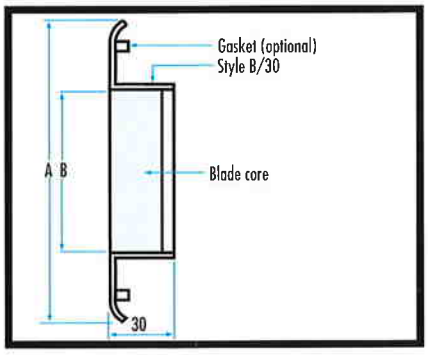

S 1100 /S 1115

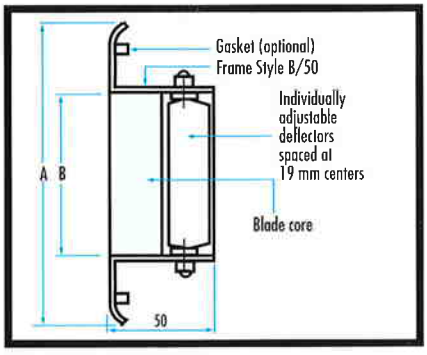

SV 1100 /SV 1115

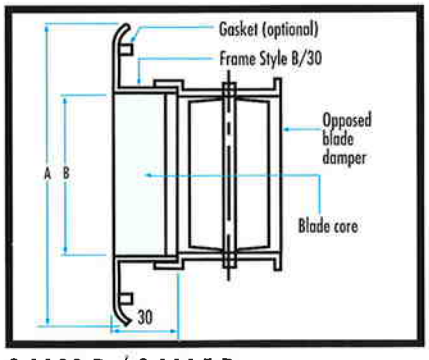

S 1100-D / S 1115-D

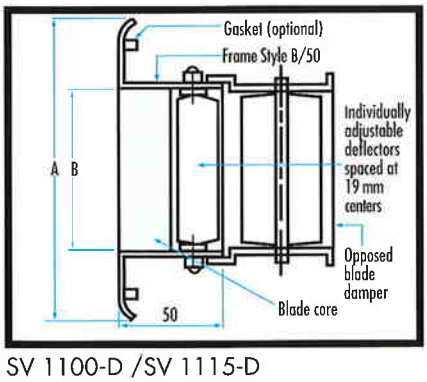

SV 1100-D /SV 1115-D

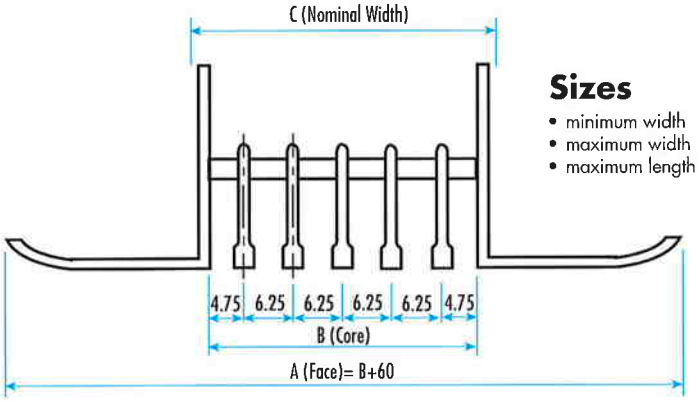

Sizes

- minimum width : 50 mm
- maximum width : 450 mm
- maximum length : 2400 mm
  one piece construction

Blade Core

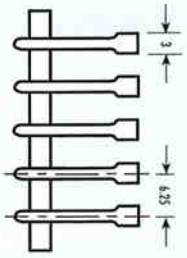

S1100 Series

S 1100 :
3mm bars;
6.25 spacing;
0° deflection

SV 1100 :
3mm bars;
6.25 spacing;
0° deflection
complete with
adjustable deflector blades

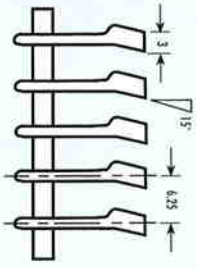

S1115 Series

S 1115 :
3mm bars;
6.25 spacing;
15° deflection

SV 1115 :
3mm bars;
6.25 spacing;
15° deflection
complete with
adjustable deflector blades

Nominal Width	Blade	Core	Frame A Face	Frame B Face	Duct Size
50	5	35	69	95	47
75	9	60	94	120	72
100	13	85	119	145	97
125	17	110	144	170	122
150	21	135	169	195	147
175	25	160	194	220	172
200	29	185	219	245	197
225	33	210	244	270	222
250	37	235	269	295	247
275	41	260	294	320	272
300	45	285	319	345	297
325	49	310	344	370	322
350	53	335	369	395	347
375	57	360	394	420	372
400	61	385	419	445	397
425	65	410	444	470	422
450	69	435	469	495	447

Supply and Return Air

S 1200
S 1215
Series



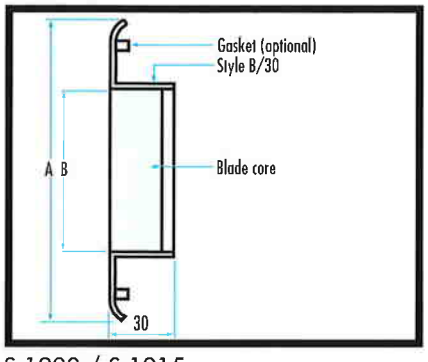

S 1200 / S 1215

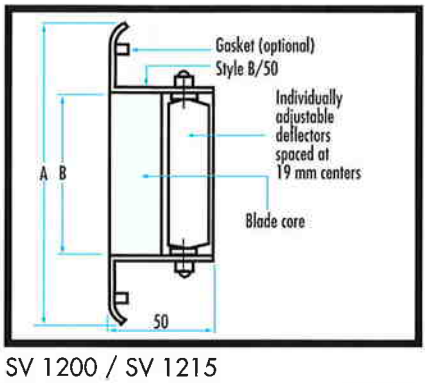

SV 1200 / SV 1215

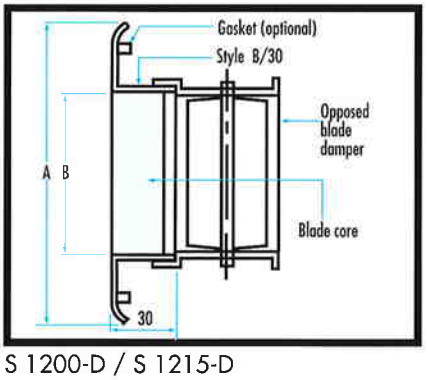

S 1200-D / S 1215-D

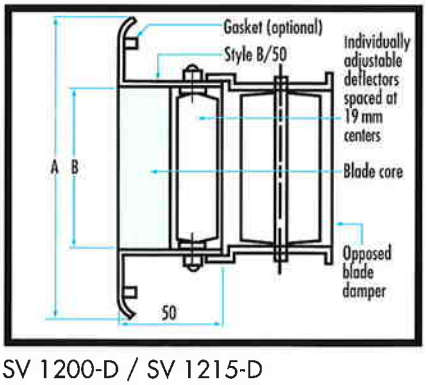

SV 1200-D / SV 1215-D

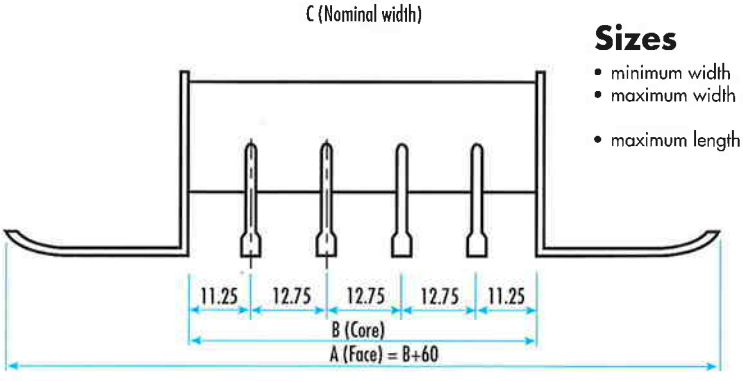

Sizes

- minimum width : 50mm
- maximum width : 400mm for supply air grille
  600 mm for return air grille
- maximum length : 2400mm
  one piece construction

Blade Core

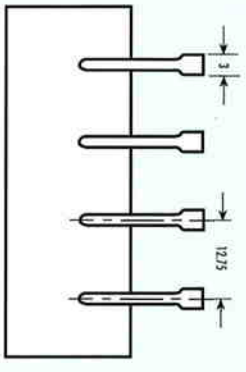

S1200 Series

S 1200 :
3mm bars;
12.75 spacing;
0° deflection

SV 1200 :
3mm bars;
12.75 spacing;
0° deflection
complete with
adjustable
deflector blades

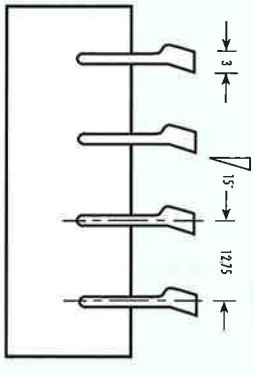

S1215 Series

S 1215 :
3mm bars;
12.75 spacing;
15° deflection

SV 1215 :
3mm bars;
12.75 spacing;
15° deflection
complete with
adjustable
deflector blades

Nominal Width	Blade	Core	Frame A Face	Frame B Face	Duct Size
50	2	35	70	95	48
75	4	61	96	121	73
100	6	86	121	146	99
125	8	112	147	172	124
150	10	137	172	197	150
175	12	163	198	223	175
200	14	188	223	248	201
225	16	214	249	274	226
250	18	239	274	299	252
275	20	265	300	325	277
300	22	290	325	350	303
325	24	316	351	376	328
350	26	341	376	401	354
375	28	367	402	427	379
400	30	392	427	452	405
425	32	418	453	478	430
450	34	443	478	503	456
475	36	469	504	529	481
500	38	494	529	554	507
525	40	520	555	580	532
550	42	545	580	605	558
575	44	571	606	631	583
600	46	596	631	656	609

Supply and Return Air

S 2200
S 2215
Series



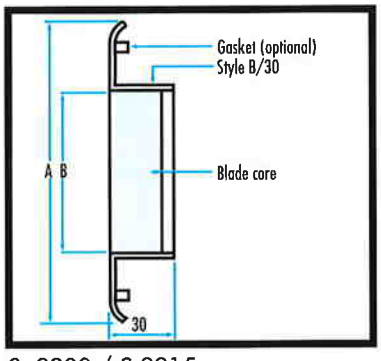

S 2200 / S 2215

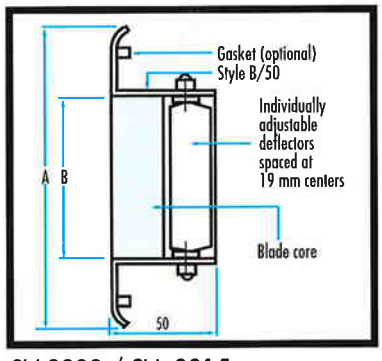

SV 2200 / SV 2215

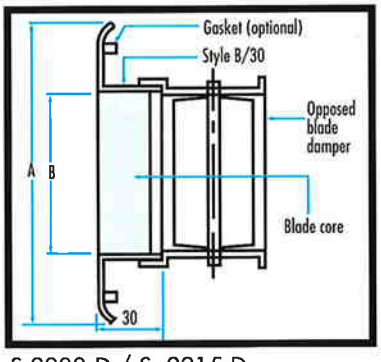

S 2200-D / S 2215-D

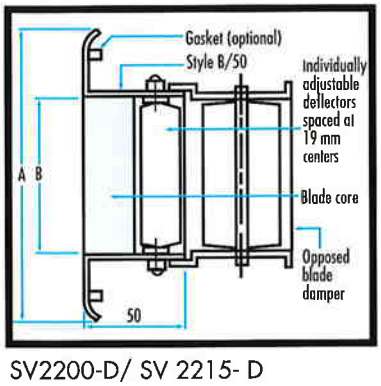

SV2200-D/ SV 2215- D

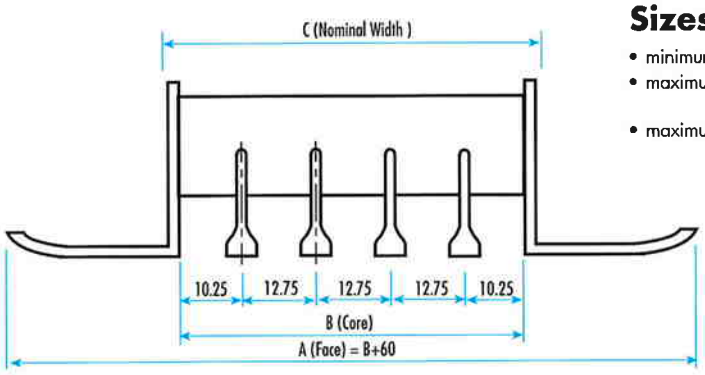

Sizes

- minimum width : 50 mm
- maximum width : 400 mm for supply air grille
  600 mm for return air grille
- maximum length : 2400 mm one piece construction

Blade Core

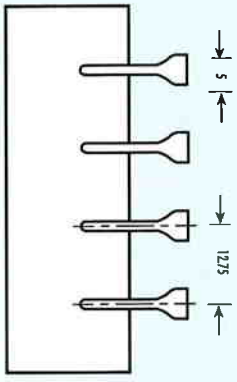

S2200 Series

S 2200 :
5mm bars;
12.75 spacing;
0° deflection

SV 2200 :
5mm bars;
12.75 spacing;
0° deflection
complete with
adjustable
deflector blades

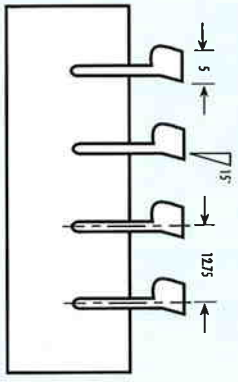

S2215 Series

S 2215 :
5mm bars;
12.75spacing;
15° deflection

SV 2215 :
5mm bars;
12.75 spacing;
15°deflection
complete with
adjustable
deflector blades

Nominal Width	Blade	Core	Frame A Face	Frame B Face	Duct Size
50	2	33	68	93	46
75	4	59	94	119	71
100	6	84	119	144	97
125	8	110	145	170	122
150	10	135	170	195	148
175	12	161	196	221	173
200	14	186	221	246	199
225	16	212	247	272	224
250	18	237	272	297	250
275	20	263	298	323	275
300	22	288	323	348	301
325	24	314	349	374	326
350	26	339	374	399	352
375	28	365	400	425	377
400	30	390	425	450	403
425	32	416	451	476	428
450	34	441	476	501	454
475	36	467	502	527	479
500	38	492	527	552	505
525	40	518	553	578	530
550	42	543	578	603	556
575	44	569	604	629	581
600	46	594	629	654	607

Note: Grilles with 5mm thick bars cannot be supplied with 6.25 mm blade spacings

Supply and Return Air

RS1100
RS1115
Series

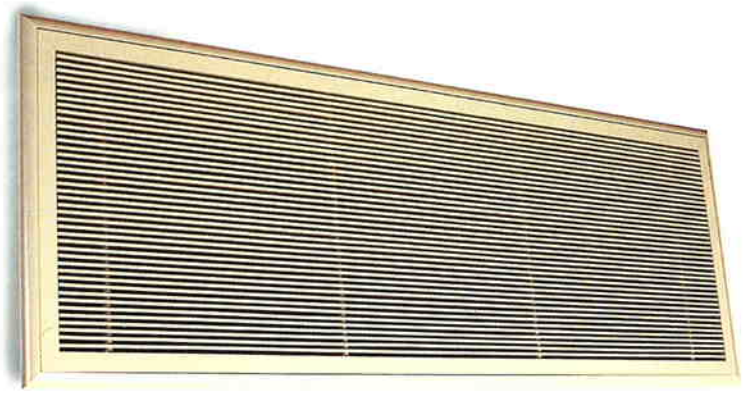

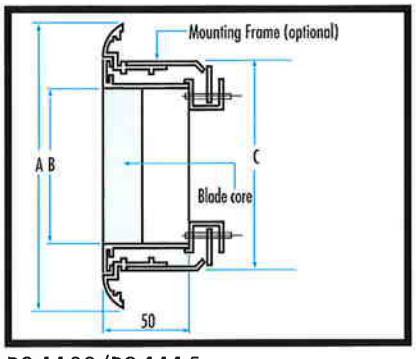

RS 1100/RS 1115

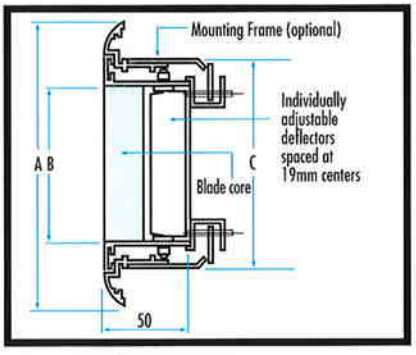

RSV 1100/RSV 1115

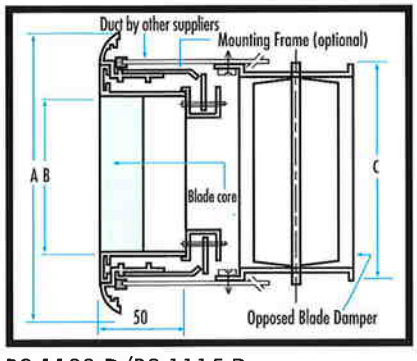

RS 1100-D/RS 1115-D

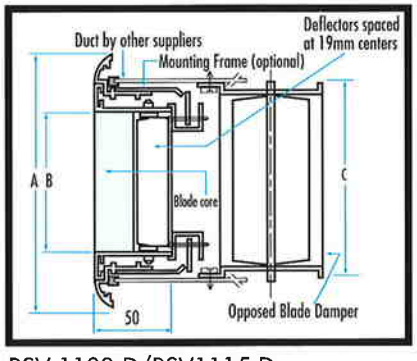

RSV 1100-D/RSV1115-D

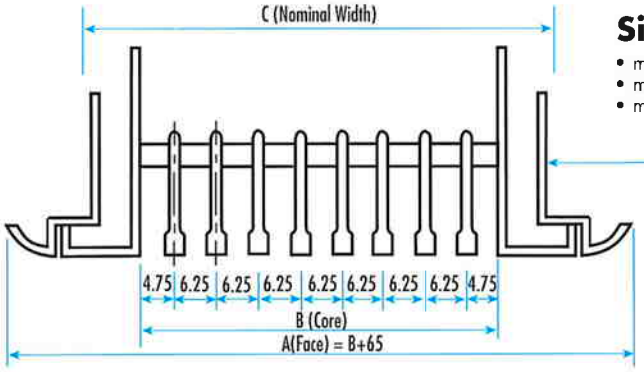

Sizes

- minimum width : 75mm
- maximum width : 450mm
- maximum length : 2400mm one piece construction

Blade Core

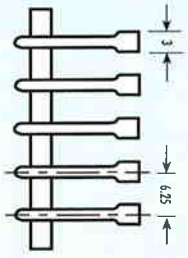

RS1100 Series

RS 1100 :
3 mm bars;
6.25 spacing;
0° deflection

RSV 1100 :
3 mm bars;
6.25 spacing;
0° deflection
complete with
adjustable deflector blades

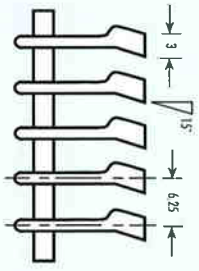

RS 1115 Series

RS 1115 :
3 mm bars;
6.25 spacing;
15° deflection

RSV 1115 :
3 mm bars;
6.25 spacing;
15° deflection
complete with
adjustable deflector blades

Nominal Width	Blade	Core	Face	Duct Size
75	7	47	112	75
100	11	72	137	100
125	15	97	162	125
150	19	122	187	150
175	23	147	212	175
200	27	172	237	200
225	31	197	262	225
250	35	222	287	250
275	39	247	312	275
300	43	272	337	300
325	47	297	362	325
350	51	322	387	350
375	55	347	412	375
400	59	372	437	400
425	63	397	462	425
450	67	422	487	450

Note: Damper will be supplied separately for installation on ductwork by contractor

Supply and Return Air

RS1200
RS1215
Series



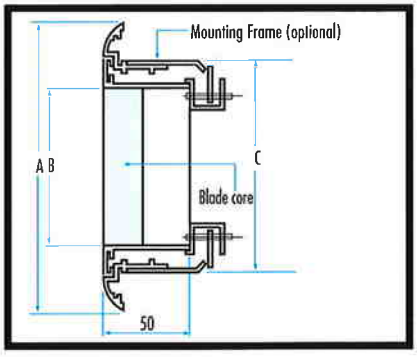

RS 1200 / RS 1215

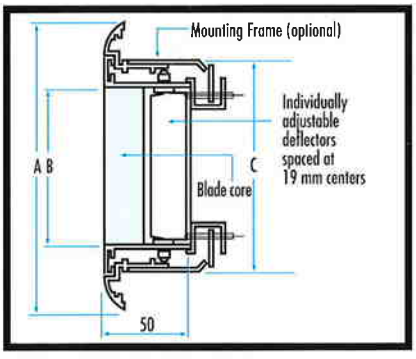

RSV 1200 / RSV 1215

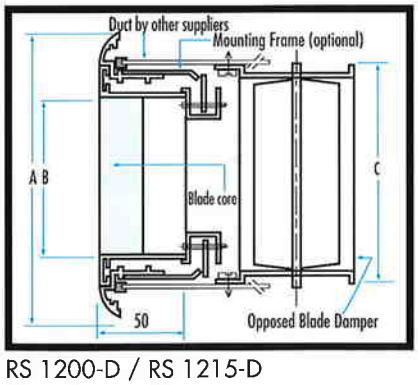

RS 1200-D / RS 1215-D

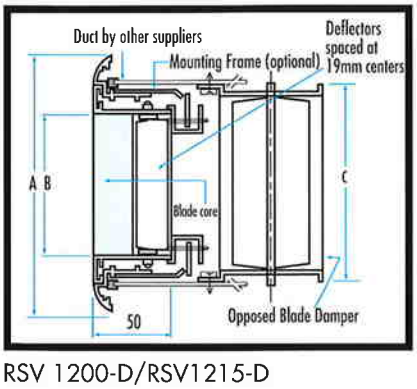

RSV 1200-D/RSV1215-D

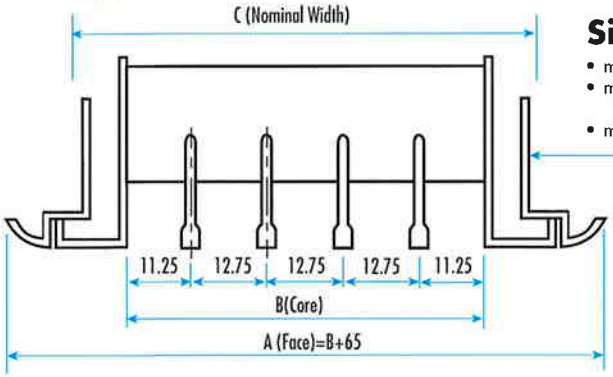

Sizes

- minimum width : 75mm
- maximum width : 400 mm for supply air grille
  600 mm for return air grille
- maximum length : 2400mm one piece construction

Blade Core

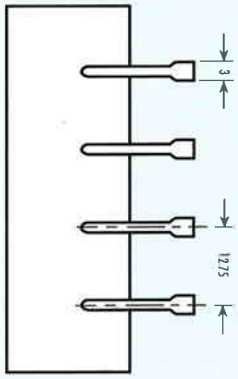

RS1200 Series

RS 1200 :
3mm bars;
12.75 spacing
0° deflection blade.

RSV 1200 :
3mm bars;
12.75 spacing;
0° deflection blade complete with adjustable deflector blades

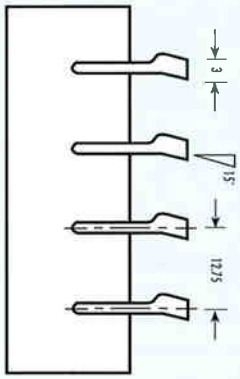

RS1215 Series

RS 1215 :
3mm bars;
12.75 spacing;
15° deflection blade

RSV 1215 :
3mm bars;
12.75 spacing;
15° deflection blade complete with adjustable deflector blades

Nominal Width	Blade	Core	Face	Duct Size
75	3	48	113	76
100	5	74	139	102
125	7	99	164	127
150	9	125	190	153
175	11	150	215	178
200	13	176	241	204
225	15	201	266	229
250	17	227	292	255
275	19	252	317	280
300	21	278	343	306
325	23	303	368	331
350	25	329	394	357
375	27	354	419	382
400	29	380	445	408
425	31	405	470	433
450	33	431	496	459
475	35	456	521	484
500	37	482	547	510
525	39	507	572	535
550	41	533	598	561
575	43	558	623	586
600	45	584	649	612

Supply and Return Air

RS 2200
RS 2215
Series

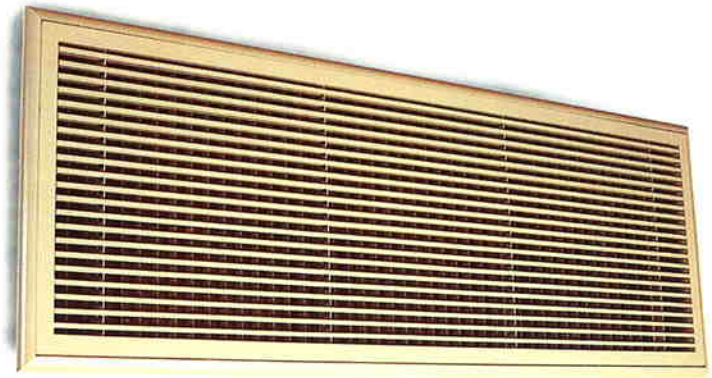

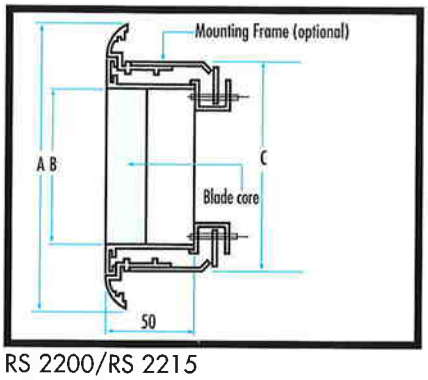

RS 2200/RS 2215

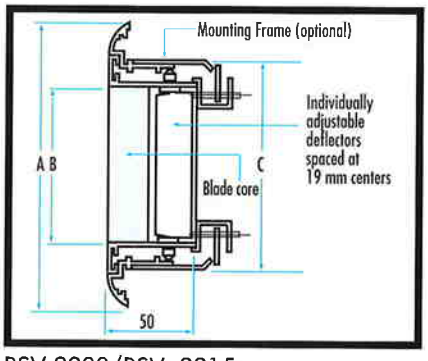

RSV 2200/RSV 2215

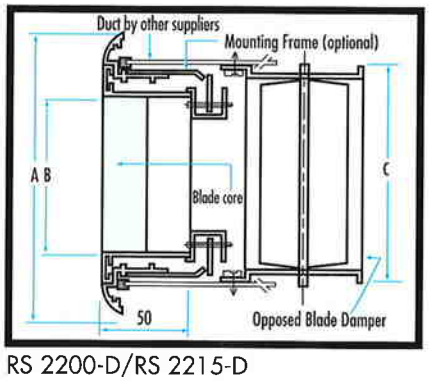

RS 2200-D/RS 2215-D

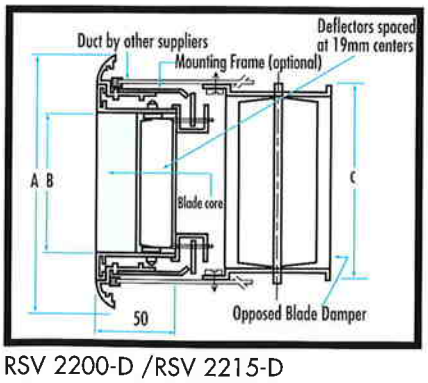

RSV 2200-D /RSV 2215-D

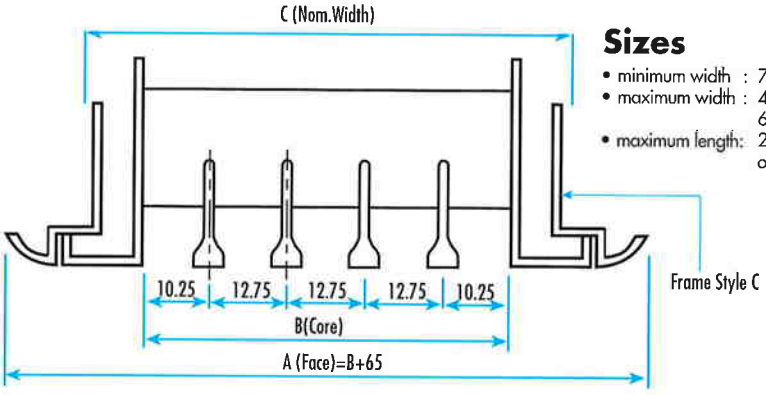

Sizes

- minimum width : 75 mm
- maximum width : 400 mm for supply air grille
  600 mm for return air grille
- maximum length: 2400 mm
  one piece construction

Blade Core

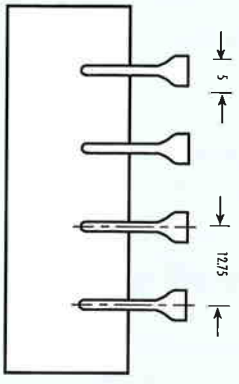

RS 2200 Series

RS 2200 :
5 mm bars;
12.75 spacing
0° deflection blade.

RSV 2200 :
5 mm bars;
12.75 spacing;
0° deflection blade
complete with
adjustable
deflector blades

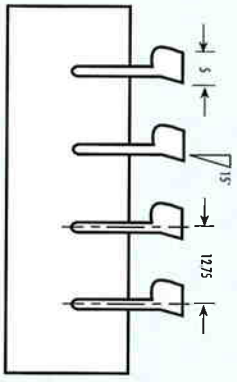

RS 2215 Series

RS 2215 :
5 mm bars;
12.75 spacing;
15° deflection blade

RSV 2215 :
5 mm bars;
12.75 spacing;
15° deflection blade
complete with
adjustable
deflector blades

Nominal Width	Blade	Core	Face	Duct Size
75	3	46	111	74
100	5	72	137	100
125	7	97	162	125
150	9	123	188	151
175	11	148	213	176
200	13	174	239	202
225	15	199	264	227
250	17	225	290	253
275	19	250	315	278
300	21	276	341	304
325	23	301	366	329
350	25	327	392	355
375	27	352	417	380
400	29	378	443	406
425	31	403	468	431
450	33	429	494	457
475	35	454	519	482
500	37	480	545	508
525	39	505	570	533
550	41	531	596	559
575	43	556	621	584
600	45	582	647	610

Note: Grilles with 5mm thick bars cannot be supplied with 6.25 mm blade spacings

Return Air with Concealed Hinges & Latches

FS 1100
FS 1200
FS 2200
Filtered Series



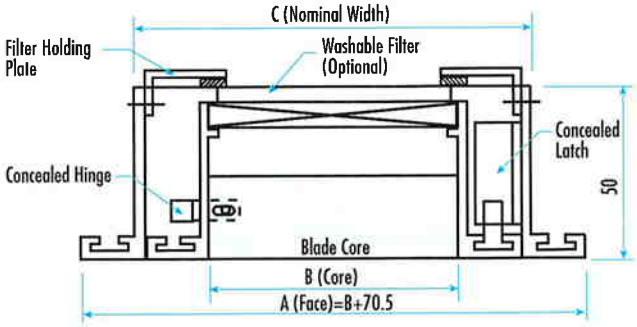

FS1100

Nominal Width	Blade	Core	Face	Duct Size
250	31	197	268	245
275	35	222	293	270
300	39	247	318	295
325	43	272	343	320
350	47	297	368	345
375	51	322	393	370
400	55	347	418	395
425	59	372	443	420
450	63	397	468	445

FS1200

Nominal Width	Blade	Core	Face	Duct Size
250	15	201	272	249
275	17	227	297	275
300	19	252	323	300
325	21	278	348	326
350	23	303	374	351
375	25	329	399	377
400	27	354	425	402
425	29	380	450	428
450	31	405	476	453
475	33	431	501	479
500	35	456	527	504
525	37	482	552	530
550	39	507	578	555
575	41	533	603	581
600	43	558	629	606

FS2200

Nominal Width	Blade	Core	Face	Duct Size
250	15	199	270	247
275	17	225	295	273
300	19	250	321	298
325	21	276	346	324
350	23	301	372	349
375	25	327	397	375
400	27	352	423	400
425	29	378	448	426
450	31	403	474	451
475	33	429	499	477
500	35	454	525	502
525	37	480	550	528
550	39	505	576	553
575	41	531	601	579
600	43	556	627	604

Note: FS2200 grilles with 5mm thick bars cannot be supplied with 6.25 mm blade spacings

Blade Core

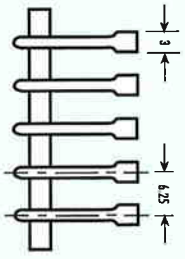

FS 1100 Series

FS 1100 : 3 mm bars; 6.25 spacing; 0° deflection complete with concealed hinges and latches

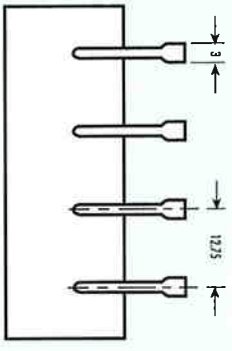

FS 1200 Series

FS 1200 : 3 mm bars; 12.75 spacing; 0° deflection complete with concealed hinges and latches

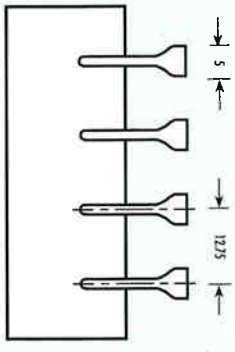

FS 2200 Series

FS 2200 : 5 mm bars; 12.75 spacing; 0° deflection complete with concealed hinges and latches

Ordering Instructions

Model
See page 10

Length
60 – 600 mm
90 – 900 mm
100 – 1000 mm
120 – 1200 mm
150 – 1500 mm
180 – 1800 mm
210 – 2100 mm
240 – 2400 mm

Width
50 – 50 mm
75 – 75 mm
100 – 100 mm
200 – 200 mm
300 – 300 mm
600 – 600 mm

Frame Styles
A : 17.4 mm flat face
B/30 : 30 x 30 mm frame with curved face
B/50 : 30 x 50 mm with curved face
C : Removable core frame
D : Hinged-type frame

Finish
W : Standard white
O : Other colors
A : Anodised
S : Stainless steel finish

Accessories
D : Opposed blade damper
D1 : Flapped damper
ETA : Equalizing-thermal-acoustic plenum
P : Non-ETA plenum
B : Blank-off
F78 : 13 mm washable filter

Specifications

Linear supply air grilles shall be constructed of extruded frame of minimum 1.25mm thick aluminium alloy 6063 tempered to T5. All linear air grilles shall be designed with semi-airfoil blades of X* degree deflection (0° or 15°) and Y* mm thick (3mm or 5mm) bars spaced at Z* mm centers (6.25mm or 12.75mm) that will give it a streamlined appearance. All parallel blades shall be securely fastened onto specially designed support bars to prevent rattling. The linear air grille shall have concealed mounting with adjustable mounting bracket for fine adjustments to ensure perfect butting on the wall or ceiling. Matching grilles shall be used for return air.

Where air distribution with short throw and wider spread are required to suit the room configuration, individually adjustable airfoil deflectors shall be added onto the rear of the grille. The deflectors shall be constructed of airfoil extruded aluminium blades securely fastened onto the frame with plastic bushes to ensure precise blade adjustment and to prevent rattling. Using steel wire as a means of preventing rattling of the blades is not acceptable.

For area utilizing fan coil unit with ceiling return, the return grille shall be supplied with acoustic plenum to minimize noise from the equipment through the grille. Where plenum is required as shown on the drawing, the plenum shall be engineered to provide uniform air distribution and shall have good noise attenuation property. Engineered plenum shall be of proprietory made by approved manufacturers. Data on plenum attenuation property and air distribution performance must be submitted for approval.

Damper shall be of the opposed blade type with blade parallel to short side and shall be adjustable from the face of the grille without special tool. Damper shall be required for all linear supply or return registers.

Where the duct take-off is shorter than two times the horizontal dimension of the linear air grilles, an air volume extractor shall be used instead of a volume damper. Installed at the take-off on the upstream side, the air volume extractor Model E25 type 1 extracts, equalizes and provides volume control of air flow into the supply linear grille, reducing air turning pressure loss and ensuring a quieter system operation. The air volume extractor shall be constructed of steel vanes assembled at 25mm centers, gang-operated and synchronized to remain parallel with airflow, regardless of the extractor angle. All supply linear air grilles performance shall be rated in accordance to ISO 5219-1984 .

LINEAR FILTER RETURN AIR GRILLES

The return linear air grille shall be of the hinged type with washable filter specially designed for this type of grille. The grilles shall be constructed of two extruded aluminium frames, an inner core frame and a mounting frame. The semi-airfoil blades of Y* mm thick (3mm or 5mm) spaced at Z* mm (6.25mm or 12.75mm) centers shall be securely fastened onto the inner core frame with special support bars to prevent rattling. The core consisting of the inner core frame and semi airfoil blades shall be attached at one side to the mounting frame with concealed hinges – exposed hinges are not acceptable. The hinged type return air grilles shall also incorporate specially designed concealed core latches and filter retainer clips which permit quick and easy removal of filter for cleaning without special tools. Filtered frame shall be constructed of extruded aluminium with washable media similar to model 78/4 as manufactured by Connols-Air. The filtered media shall be retained in the filter frame such that the media can be easily removed for cleaning, by simply releasing the flexible wire. The filter shall have a dust extraction efficiency of 70 per cent according to ASHRAE 52-76. All return air grilles performance shall be rated in accordance to ISO 5219-1984.

** Specify the required blade deflection, thickness and spacing.*

Supply Air Performance

Model S2200 and SV2200 with rear adjustable blade at zero degree

Neck Velocity (m/s)		1	1.5	2	2.5	3	3.5	4	4.5	5	5.5	6	6.5
Nominal Width (mm)	Static Pressure (Pa)	-	-	-	-	6	8	11	15	19	23	28	34
50	Flow(CMH/m)	180	270	360	450	540	630	720	810	900	990	1080	1170
	NC	-	-	-	-	-	-	21	24	26	28	30	31
	Throw(m)	1.5	2.3	3	3.8	4.5	5.3	6.1	6.9	7.7	8.5	9.2	10
75	Flow(CMH/m)	270	405	540	675	810	945	1080	1215	1350	1485	1620	1755
	NC	-	-	-	-	-	20	23	26	28	30	32	33
	Throw	1.6	2.4	3.2	4.1	4.9	5.8	6.6	7.5	8.3	9.2	10	10.9
100	Flow(CMH/m)	360	540	720	900	1080	1260	1440	1620	1800	1980	2160	2340
	NC	-	-	-	-	-	21	24	27	29	31	33	34
	Throw	1.9	2.9	3.9	4.9	5.9	6.9	7.9	8.9	9.9	11	12	13
125	Flow(CMH/m)	450	675	900	1125	1350	1575	1800	2025	2250	2475	2700	2925
	NC	-	-	-	-	-	22	25	28	30	32	34	35
	Throw	2.2	33	4.4	5.6	6.7	7.9	9	10.2	11.4	12.5	13.7	14.9
150	Flow(CMH/m)	540	810	1080	1350	1620	1890	2160	2430	2700	2970	3240	3510
	NC	-	-	-	-	20	23	26	29	31	33	35	36
	Throw	2.4	3.7	4.9	6.2	7.4	8.7	10	11.3	12.6	13.9	15.2	16.5
175	Flow(CMH/m)	630	945	1260	1575	1890	2205	2520	2835	3150	3465	3780	4095
	NC	-	-	-	-	21	24	27	30	32	34	36	38
	Throw	2.7	4.2	5.6	7	8.5	9.9	11.4	12.9	14.3	15.8	17.3	18.8
200	Flow(CMH/m)	720	1080	1440	1800	2160	2520	2880	3240	3600	3960	4320	4680
	NC	-	-	-	-	21	24	27	30	32	34	36	37
	Throw	2.9	4.5	6	7.5	9.1	10.6	12.2	13.8	15.3	16.9	18.5	20.1
225	Flow(CMH/m)	810	1215	1620	2025	2430	2835	3240	3645	4050	4455	4860	5265
	NC	-	-	-	-	22	25	28	31	33	35	37	38
	Throw	3.1	4.8	6.3	8	9.6	11.3	12.9	14.6	16.3	17.9	19.6	21.3
250	Flow(CMH/m)	900	1350	1800	2250	2700	3150	3600	4050	4500	4950	5400	5850
	NC	-	-	-	-	22	25	28	31	33	35	37	38
	Throw	3.3	5	6.7	8.4	10.1	11.9	13.6	15.4	17.1	18.9	20.7	22.5
275	Flow(CMH/m)	990	1485	1980	2475	2970	3465	3960	4455	4950	5445	5940	6435
	NC	-	-	-	-	23	26	29	32	34	36	38	39
	Throw	3.4	5.3	7	8.8	10.6	12.4	14.3	16.1	18	19.8	21.7	23.6
300	Flow(CMH/m)	1080	1620	2160	2700	3240	3780	4320	4860	5400	5940	6480	7020
	NC	-	-	-	-	23	26	29	32	34	36	38	39
	Throw	3.6	5.5	7.3	9.2	11.1	13	14.9	16.8	18.8	20.7	22.7	24.6
325	Flow(CMH/m)	1170	1755	2340	2925	3510	4095	4680	5265	5850	6435	7020	7605
	NC	-	-	-	20	23	27	29	32	34	36	38	40
	Throw	3.7	5.7	7.6	9.6	11.5	13	15.5	17.5	19.5	21.6	23.6	25.6
350	Flow(CMH/m)	1260	1890	2520	3150	3780	4410	5040	5670	6300	6930	7560	8190
	NC	-	-	-	20	24	27	30	33	35	37	39	41
	Throw	3.9	6	7.9	9.9	12	14	16.1	18.2	20.3	22.4	24.5	26.6
375	Flow(CMH/m)	1350	2025	2700	3375	4050	4725	5400	6075	6750	7425	8100	8775
	NC	-	-	-	20	24	27	30	33	35	37	39	40
	Throw	4	6.2	8.2	103	12.4	14.5	16.7	18.8	21	23.2	25.3	27.5
400	Flow(CMH/m)	1440	2160	2880	3600	4320	5040	5760	6480	7200	7920	8640	9360
	NC	-	-	-	20	24	27	30	33	35	37	39	40
	Throw	4.1	6.4	8.4	10.6	12.8	15	17.2	19.4	21.7	23.9	26.2	28.4

Remarks : "-" for NC represent level below 20 dB

"-" for pressure loss represent loss below 5 Pa

All throw are based on terminal velocity of 0.25 m/s

All throe are based on isothermal conditions, for converstion factor, please refer to note 6

All performance data are based on 1000mm grille length

Supply Air Performance

Model SV2200 with rear blade setting at 22 degrees

Neck Velocity (m/s)		1	1.5	2	2.5	3	3.5	4	4.5	5	5.5	6	6.5
Nominal Width (mm)	Static Pressure (Pa)	-	-	6	9	2	16	21	26	31	27	43	50
50	Flow(CMH/m)	180	270	360	450	540	630	720	810	900	990	1080	1170
	NC	-	-	-	-	-	22	25	28	31	33	36	38
	Throw(m)	1.4	2.1	2.8	3.5	4	4.9	5.6	6.4	7.1	7.8	8.5	9.2
75	Flow(CMH/m)	270	405	540	675	810	945	1080	1215	1350	1485	1620	1755
	NC	-	-	-	-	-	23	27	30	32	35	37	39
	Throw	1.5	2.2	2.9	3.8	4.5	5.3	6.1	6.9	7.6	8.5	9.2	10.0
100	Flow(CMH/m)	360	540	720	900	1080	1260	1440	1620	1800	1980	2160	2340
	NC	-	-	-	-	21	25	28	31	34	36	39	41
	Throw	1.7	2.6	3.5	4.3	5.2	6.1	7.0	7.9	8.8	9.7	10.6	11.5
125	Flow(CMH/m)	450	675	900	1125	1350	1575	1800	2025	2250	2475	2700	2925
	NC	-	-	-	-	22	26	29	32	35	37	39	41
	Throw	1.9	2.9	3.9	5.0	5.9	7.0	8.0	9.0	10.1	11.1	12.1	13.2
150	Flow(CMH/m)	540	180	1080	1350	1620	1890	2160	2430	2700	2970	3240	3510
	NC	-	-	-	-	22	26	30	33	35	38	40	42
	Throw	2.1	3.3	4.3	5.5	6.5	7.7	8.8	10.0	11.2	12.3	13.5	14.6
175	Flow(CMH/m)	630	945	1260	1575	1890	2205	2520	2835	3150	3465	3780	4095
	NC	-	-	-	-	23	27	30	34	36	39	41	43
	Throw	2.4	3.7	5.0	6.2	7.5	8.8	10.1	11.4	12.7	14.0	15.3	16.6
200	Flow(CMH/m)	720	1080	1440	1800	2160	2520	2880	32400	3600	3960	4320	4680
	NC	-	-	-	-	28	28	31	34	37	39	42	44
	Throw	3.3	5.1	6.8	8.5	10.3	12.0	13.8	15.6	17.3	19.1	20.9	22.7
225	Flow(CMH/m)	810	1215	1620	2025	2430	2835	3240	3645	4050	4455	4860	5265
	NC	-	-	-	20	25	29	3235	35	38	40	43	45
	Throw	2.7	4.2	5.6	7.1	8.5	10.0	11.4	12.9	14.4	15.8	17.3	18.8
250	Flow(CMH/m)	900	1350	1800	2250	2700	3150	3600	4050	4500	4950	5400	5850
	NC	-	-	-	21	26	30	33	36	39	41	43	45
	Throw	2.9	4.4	5.9	7.4	8.9	10.5	12.0	3.6	151.0	16.7	18.3	19.9
275	Flow(CMH/m)	990	1485	1980	2475	2970	3465	3960	4455	4950	5445	5940	6435
	NC	-	-	-	21	26	30	33	36	39	42	44	46
	Throw	3.1	4.9	6.4	8.1	9.8	11.4	13.2	14.8	16.6	18.2	20.0	21.7
300	Flow(CMH/m)	1080	1620	2160	2700	3240	3780	4320	4860	5400	5940	6480	7020
	NC	-	-	-	22	27	31	34	37	40	42	44	46
	Throw	3.2	4.9	6.5	8.1	9.8	11.5	13.2	14.9	16.6	18.3	20.1	21.8
325	Flow(CMH/m)	1170	1755	2340	2925	3510	4095	4680	5265	5850	6435	7020	7605
	NC	-	-	-	22	27	31	34	37	40	42	45	47
	Throw	3.3	5.0	6.7	8.5	10.2	11.5	13.7	15.5	17.3	19.1	20.9	22.7
350	Flow(CMH/m)	1260	1890	2520	3150	3780	4410	5040	5670	6300	6930	7560	8190
	NC	-	-	-	22	27	31	34	38	40	43	45	47
	Throw	3.5	5.5	7.0	8.8	10.6	12.4	14.2	16.1	18.0	19.8	21.7	23.5
375	Flow(CMH/m)	1350	2025	2700	3375	4050	4725	5400	6075	6750	7425	8100	8775
	NC	-	-	-	23	27	31	35	38	41	43	45	47
	Throw	3.5	5.5	7.3	9.1	11.0	12.8	14.8	16.6	18.6	20.5	22.4	24.3
400	Flow(CMH/m)	1440	2160	2880	3600	4320	5040	5760	6480	7200	7920	8640	9360
	NC	-	-	-	23	28	32	35	38	41	43	46	48
	Throw	3.8	5.9	7.7	9.8	11.8	13.8	15.8	17.9	20.0	22.0	24.1	26.1

Remarks : "-" for NC represent level below 20 dB

"-" for pressure loss represent loss below 5 Pa

All throw are based on terminal velocity of 0.25 m/s

All throe are based on isothermal conditions, for converstion factor, please refer to note 6

All performance data are based on 1000mm grille length

Return Air Performance

Model S2200

Neck Velocity (m/s)		1.5	2	2.5	3	3.5	4	4.5	5
Nominal Width (mm)	Static Pressure (Pa)	-	5	7	10	14	18	22	27
50	Flow(CMH/m)	270	360	450	540	630	720	810	900
	NC	-	-	21	24	27	30	33	36
75	Flow(CMH/m)	405	540	675	810	945	1080	1215	1350
	NC	-	-	21	25	28	31	34	37
100	Flow(CMH/m)	540	720	900	1080	1260	1440	1620	1800
	NC	-	-	22	26	29	32	35	38
125	Flow(CMH/m)	675	900	1125	1350	1575	1800	2025	2250
	NC	-	-	23	23	30	33	36	39
150	Flow(CMH/m)	810	1080	1350	1620	1890	2160	2430	2700
	NC	-	20	24	27	31	34	38	41
175	Flow(CMH/m)	945	1260	1575	1890	2205	2520	2835	3150
	NC	-	20	24	27	31	34	38	41
200	Flow(CMH/m)	1080	1440	1800	2160	2520	2880	3240	3600
	NC	-	21	25	29	33	36	40	43
225	Flow(CMH/m)	1215	1620	2025	2430	2835	3240	3645	4050
	NC	-	22	26	30	34	37	41	44
250	Flow(CMH/m)	1350	1800	2250	2700	3150	3600	4050	4500
	NC	-	22	26	31	34	38	42	45
275	Flow(CMH/m)	1485	1980	2475	2970	3465	3960	4455	4950
	NC	-	23	27	31	35	39	43	46
300	Flow(CMH/m)	1620	2160	2700	3240	3780	4320	4860	5400
	NC	-	23	28	32	36	40	44	47
325	Flow(CMH/m)	1755	2340	2925	3510	4095	4680	5265	5850
	NC	-	24	28	32	336	40	44	48
350	Flow(CMH/m)	1890	2520	3150	3780	4410	5040	5670	6300
	NC	-	24	29	33	37	41	45	49
375	Flow(CMH/m)	2025	2700	3375	4050	4725	5400	6075	6750
	NC	20	24	29	33	38	42	46	50
400	Flow(CMH/m)	2160	2880	3600	4320	5040	5760	6480	7200
	NC	20	25	30	34	38	43	47	51
425	Flow(CMH/m)	2295	3060	3825	4590	5355	6120	6885	7650
	NC	20	25	30	34	39	43	47	51
450	Flow(CMH/m)	2430	3240	4050	4860	5670	6480	7290	8100
	NC	20	26	30	35	39	44	48	52
475	Flow(CMH/m)	2565	3420	4275	5130	5985	6840	7695	8550
	NC	21	26	31	35	40	44	49	55
500	Flow(CMH/m)	2700	3600	4500	5400	6300	7200	8100	9000
	NC	21	26	31	36	40	45	49	53
525	Flow(CMH/m)	2835	3780	4725	5670	6615	7560	8505	9450
	NC	21	26	31	36	41	45	50	54
550	Flow(CMH/m)	2970	3960	4950	5940	6930	7920	8910	9900
	NC	21	27	32	37	41	46	50	55
575	Flow(CMH/m)	3105	4140	5175	6210	7245	8280	9315	10350
	NC	22	27	32	37	42	46	51	55
600	Flow(CMH/m)	3240	4320	5400	6480	7560	8640	9720	10800
	NC	22	27	33	37	42	47	51	56

Remarks: "-" for NC represent level below 20 dB

"-" for pressure loss represent loss blow 5 Pa

All performance data are based on 1000mm grille length

Note:

1. NC values are based on 10 dB room absorption
2. Throw data are based on 0.25 m/s terminal velocity
3. NC Values are based on 1000mm length grilles. For grilles of other lengths add the correction factor as shown in the table 1 below
4. Nc values are applicable to register with damper in full open postion. Effect of damper closure on noise generated by the register is shown in table 2 below.
5. NC values are based on noise generated by a single grille or register. When more than one grille is present it may be necessary to add the appropriate value from table 3 below for the effect of of multiple grilles and register
6. Throw data are based on isothermal conditions. To determine throw for temperature differential of 10 degrees, multiply a factor of 0.78 to the throw values.
7. Balancing data are shown in chart 1 and diagram 1
8. Data obtained above are based in the tests conducted in the reverberation laboratory according to ISO 5135, ISO 3741, ISO 5219

Table 1: NC correction for length								
300	600	900	1000	1200	1500	1800	2100	2400
-2	-1	0	0	0	+1	+1	+2	+2

Table 2: NC correction for damper throttling		
Effective Damper Opening	Total Resistance	dB To be added
100%	100%	0dB
80%	150%	5dB
70%	200%	8dB
50%	400%	16dB

Table 3 : NC correction for multiple grilles/register											
Sound Power Level Difference Grilles	0	1	2	3	4	5	6	7	8	9	10
Sound Power Level to be added	3	2.5	2	1.5	1.5	1	1	0.5	0	0	0



CONNOLS-AIR (S) PTE LTD
3-B Joo Koon Circle
Singapore 629034
Tel : (65) 861 5253
Fax : (65) 861 9850

Designed & Produced by Propac Design Consultants • Tel: 235 4404