CONNOLS-AIR

LINEAR SLOT DIFFUSER

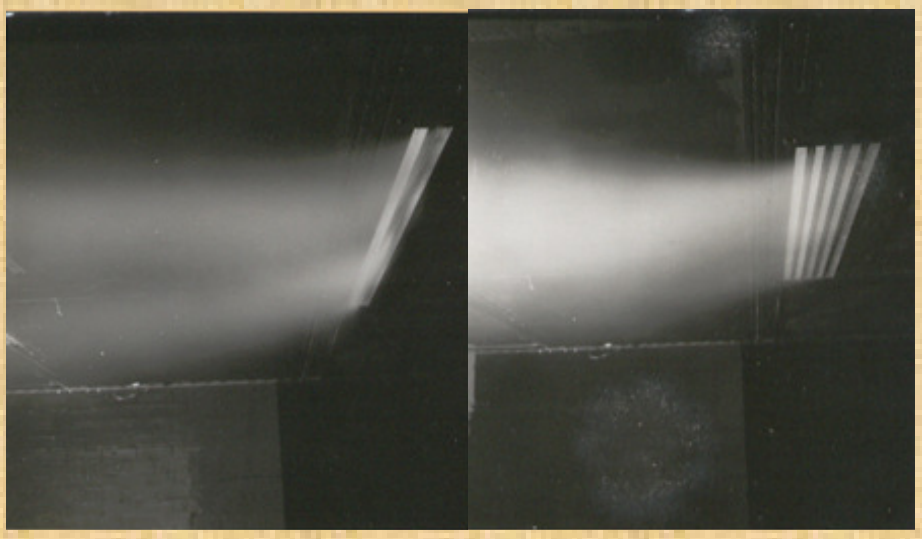

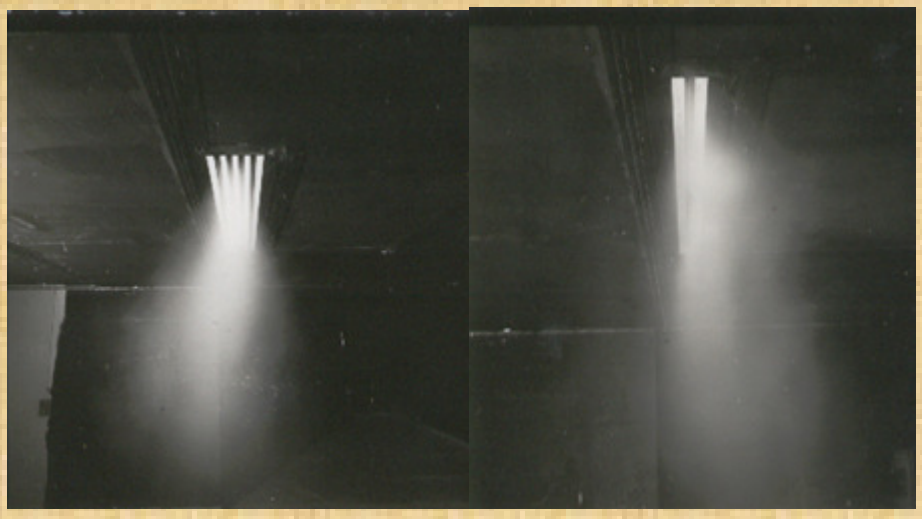

LEADER IN AIR DISTRIBUTION PRODUCTS

LINEAR SLOT DIFFUSER

MODEL: **LSD** - *Supply diffuser with adjustable damper / pattern control blade*
LRD - *Return diffuser without adjustable damper / pattern control blade*

CONSTRUCTION

The frames and blades are constructed of corrosion resistance aluminium alloy 6063 tempered to T5. Adjustable blades are anodised matt black in color and fixed to the frame with special brackets which allow it to function both as an air pattern controller and damper.

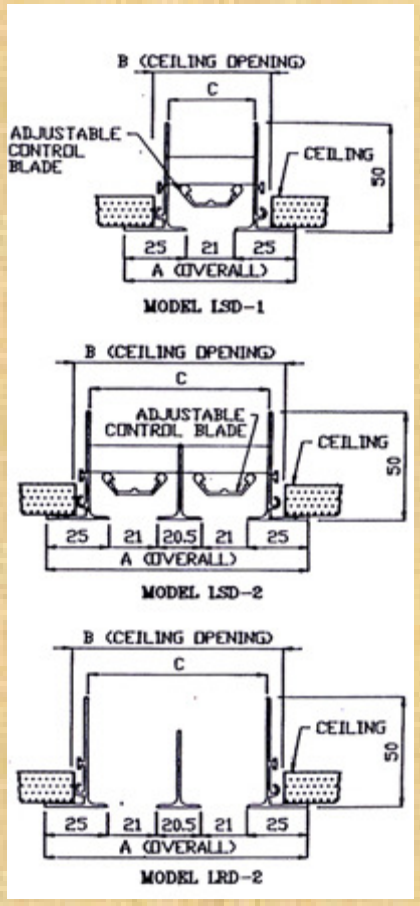

FEATURES

- Frames and blade are constructed of corrosion resistance aluminium alloy and tempered to give rigidity
- Blade easily adjustable from the face of the diffuser
- Air flow pattern setting is easy with dual function blade
- Flow pattern adjustable to give horizontal one or two way throw or vertical throw for high ceiling installation
- A wide range of sizes from 1 to 8 slots to handle a wide range of air flow
- Standard length up to 2400mm one piece construction
- Acoustic plenum internally insulated with high density fibregllass provide excellent noise attenuation and hence ensure lower room noise
- Dual function blade may be used as a damper for return air application
- Low pressure loss and low generated noise

NO. OF SLOT	A	B	C
1	71	55	40
2	113	98	82
3	154	138	123
4	196	180	165

FINISH

Standard finish is baked white enamel. Other colors are available on request. For special finish, refer to our factory. As a standard, blade is available in matt black color.

AIR FLOW PATTERN

The blades can be easily adjustable after installation to provide all kinds of airflow pattern to suite all type of installation. Each blade is individually adjustable to give horizontal or vertical throw pattern and throttled for balancing airflow. The following drawings show some of the throw pattern with two-slot diffuser. Flow pattern can be easily obtained by following the simple logic.

FLOW PATTERN LOGIC

For Right Horizontal Throw – set Blade to the Right side
For Left Horizontal Throw – set Blade to Left Side
For Vertical Throw – set Blade to Centre of the slot

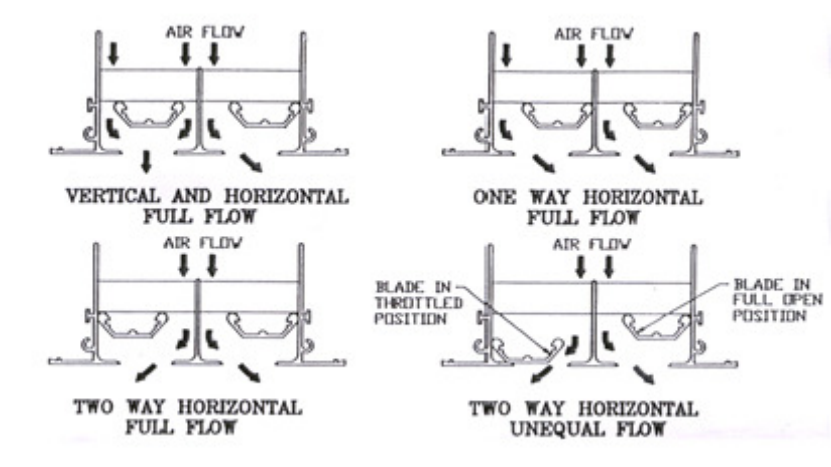

BLADE SETTING

1) With your fingers, push the blade back as far as it can go for maximum airflow and, at the same time, push it to the side that give you the desired airflow direction according to the simple logic explained above.
2) To throttle the air volume, use the "J" hook provided to pull the blade vertically down gently at each end of the blade as shown below. The diffuser slot can also be shut off by pulling the blade down toward the slot opening. Please note however that throttling at the diffuser should be minimized and, as far as possible avoided as it would generate excessive noise. Throttling as far as possible should be done with damper upstream at the plenum inlet or duct take-off so that any noise generated due to throttling can be attenuated by the plenum.

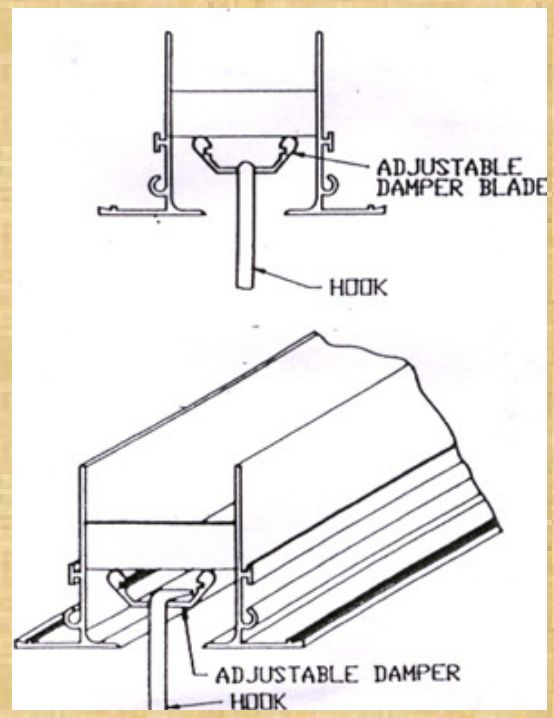

APPLICATIONS

Although the diffuser is rated for supply, it can be used as return unit or as a combination unit as in the case with air-light fixtures. The Series LSD diffuser can be easily used for integrated ceiling system with appropriate installation accessories as was done in the 34 storey United Square Project shown below.

34 STOREY UNITED SQUARE INTEGRATED CEILING SYSTEM WITH LSD DIFFUSER



When installed on high side wall, the air discharged from the slot diffuser will not drop if the diffuser is located within 150-300 mm from the ceiling, and is of sufficient length to establish surface effect. Under these conditions, air will travel along the ceiling to the end of the throw. If the slot diffuser is mounted 300-600 mm below the ceiling, the control blade shall be adjusted to deflect the air up to the ceiling to achieve the same result.
The linear slot diffuser may be used with a plenum box as shown on page 5. The plenum box is constructed of galvanised steel sheet and lined with 48kg/m^3 tissue coated glass fibre insulation. It can be supplied with a volume control damper for balancing purpose. Plenum box is incorporated for the following reasons:

- Increase sound attenuation of duct noise
- More even distribution of air across face of diffuser
- Easy installation
- Allow last minute relocation of diffuser as the box is connected to the ducting by flexible duct
- Upgrade the overall performance of the system

SPECIFICATION

The linear diffuser shall be constructed of extruded aluminium alloy 6063 T5. The air delivery patterns shall be manually adjustable from the face of diffuser when installed to provide horizontal left or right, vertical, or intermediate air pattern from each slot independent of any other slot. The air pattern control blade in each slot shall be adjusted independently from the face of diffuser to balance the air discharge or complete blank off on inactive sections of the diffuser. All linear supply diffusers or returns shall be LRD or LSD as manufactured by OLS Manufacturing Co. Pte Ltd.

SLOT DIFFUSER MOUNTED ON AIR PLENUM BOX

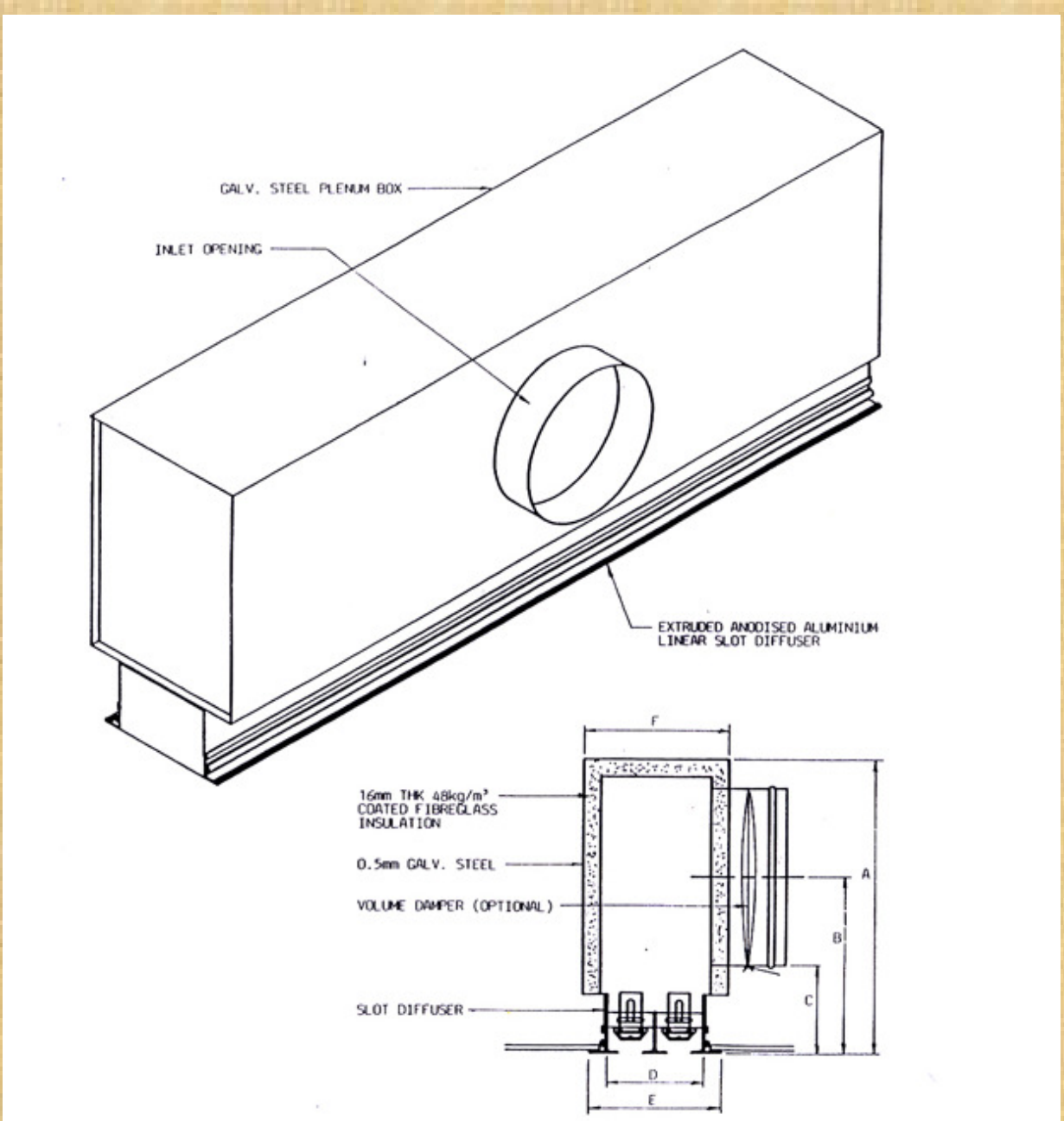

SLOT	A	B	C	D	E	F	INLET
1	225	138	75	44	71	80	125 Round
2	250	150	75	84	113	122	150 Round
3	300	175	75	123	154	163	200 Round
4	300	175	75	163	196	220	200 Oval

PERFORMANCE DATA --- SUPPLY AIR

MODEL: LSD complete with plenum

1 Slot				2 Slot			
Flow (l/s)	Press. Drop (Pa)	Throw m	NR	Flow (l/s)	Press. Drop (Pa)	Throw m	NR
30	7	0.95	17	60	14	1.14	20
35	9	1.11	20	65	16	1.24	22
40	12	1.26	23	70	19	1.33	23
45	15	1.42	25	75	22	1.43	25
50	19	1.58	27	80	25	1.52	26
55	23	1.74	29	85	28	1.62	27
60	27	1.90	31	90	31	1.71	28
65	32	2.06	33	95	34	1.81	30
70	37	2.21	34	100	38	1.91	31
75	42	2.37	35	105	42	2.00	32
80	48	2.53	37	110	46	2.10	33
85	54	2.69	38	115	50	2.19	34
90	60	2.85	39	120	54	2.29	34
95	67	3.00	40	125	59	2.38	35
100	74	3.16	41	130	63	2.48	36

MODEL: LSD complete with plenum

3 Slot				4 Slot			
Flow (l/s)	Press. Drop (Pa)	Throw m	NR	Flow (l/s)	Press. Drop (Pa)	Throw m	NR
70	13	1.11	17	90	16	1.43	17
75	14	1.19	18	95	18	1.51	18
80	16	1.27	19	100	20	1.58	19
85	18	1.35	20	105	22	1.66	20
90	20	1.43	21	110	24	1.74	21
95	23	1.51	22	115	26	1.82	22
100	25	1.58	23	120	28	1.90	23
105	28	1.66	24	125	30	1.98	24
110	30	1.74	25	130	33	2.06	25
115	33	1.82	26	135	35	2.14	25
120	36	1.90	27	140	38	2.22	26
125	39	1.98	28	145	40	2.30	27
130	42	2.06	29	150	43	2.38	28
135	45	2.14	30	155	46	2.46	29
140	48	2.22	31	160	49	2.54	29

Note:
NR values are based on a room absorption of 8 db.
Throw values are for terminal velocity of 0.25 m/s.
Sound data are base on 1.2m length diffuser, db correction for various length are:

Length:	300mm	600mm	900mm	1200mm	1500mm	1800mm
Corr.:	-4	-3	-1	0	+1	+2

PERFORMANCE DATA --- RETURN AIR

MODEL: LSD with blade fully retracted and without plenum

1-Slot			2-Slot			3-Slot			4-Slot		
Flow (l/s)	Press. Drop (Pa)	NR	Flow (l/s)	Press. Drop (Pa)	NR	Flow (l/s)	Press. Drop (Pa)	NR	Flow (l/s)	Press. Drop (Pa)	NR
55	9	18	70	7	17	90	5	18	110	-	18
60	11	19	80	9	20	110	6	19	120	4	19
65	12	21	90	11	23	120	8	20	130	5	20
70	14	23	100	14	25	130	9	21	140	6	21
75	16	25	110	17	27	140	10	23	150	7	22
80	18	26	120	20	29	150	11	24	160	8	24
85	20	28	130	23	31	160	13	26	170	8	25
90	22	30	140	26	33	170	15	27	180	10	27
95	24	31	150	30	35	180	16	29	190	11	28
100	26	32	160	34	37	190	18	30	200	12	30
105	27	34	170	38	38	200	20	32	210	14	31
110	30	35	180	42	39	210	23	33	220	15	33
120	34	39	190	46	41	220	25	35	230	17	35
						230	27	37	240	20	36

MODEL: LSD with blade fully retracted and complete with plenum

1-Slot			2-Slot			3-Slot			4-Slot		
Flow (l/s)	Press. Drop (Pa)	NR	Flow (l/s)	Press. Drop (Pa)	NR	Flow (l/s)	Press. Drop (Pa)	NR	Flow (l/s)	Press. Drop (Pa)	NR
30	4	20	75	11	20	80	5	20	140	6	19
40	6	22	80	12	22	90	6	23	150	7	21
50	8	25	90	15	26	100	8	27	160	8	23
60	12	29	100	17	30	110	10	29	170	9	26
70	15	33	110	23	32	120	12	30	180	11	28
75	17	35	120	28	34	130	13	32	190	13	31
80	20	36	130	34	36	140	15	33	200	15	33
90	27	39	140	39	38	150	17	35	210	16	34
100	34	41	150	45	40	160	20	37	220	18	35
						170	24	39	230	19	37
						180	27	42	240	21	38
									250	22	39

Note: All NR value are based on single source sound power level and room losses of 8 db at all octave bands.



51 Storey Treasury Building
Installed With LSD Integrated
Linear Slot Diffusers.

In the interest of the product improvement, we reserve the right to make change without notice.

CONNOLS-AIR (S) PTE LTD
3-B, Joo Koon Circle, Singapore 629034
Website: http://www.connols-air.com
Email: enquiry@connols-air.com
Company No: 198900833W GST Reg No: 19-8900833-W