EAE

ELEKTRİK

E-LINE KX

Busbar Systems 630A...6300A



CONTENTS

EAE
ELEKTRİK

▶▶ E-LINE KX

Introduction 2-3
Distribution & Horizontal Applications 4
Riser & Vertical Applications 5
Technical Characteristics 6-9
Order Code System 10
Straight Lengths 11
Elbows 12-15
Standard Components 16
Expansions 17-18
End Closer 19
Panel Connections 20-25
Transformer Connections & Flexible 26-29
Tap-off Boxes 30-35
Vertical & Horizontal Support Applications 36-37
Feeder Boxes 38-39
Fixing Elements 40-47
Joint Structure 48
Measuring a Special Length 49
Inserting "Make-up Section" 50
CE Conformity Certificate 51
Certificates 52
Product Specification 53

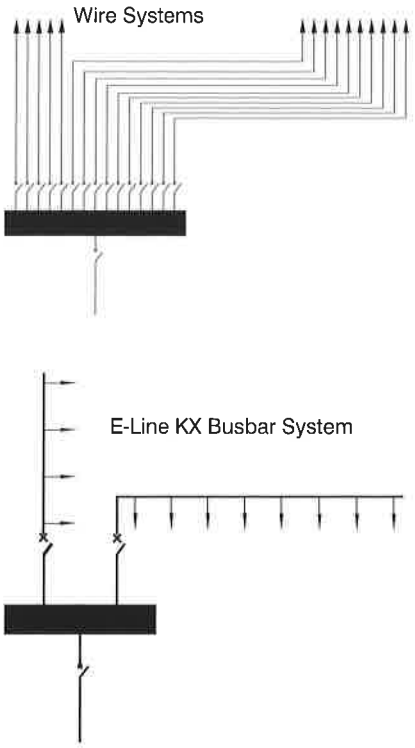

Transportation and distribution of electricity especially at high ampere ratings used to be provided by paralelling a number of large sized cables. In order to support these cables in the buildings, there were used a lot of cable trays, cable ladders, under-floor cable channels, etc. Applications of cables, such as, fixing to cable channels, branching, connecting, calculating distances between cables for heat dissipation, adjusting difference lengths, etc. need special expert workers, more time, more effort, which means more money. Even after all above difficulties and expense, the result is not efficient enough. For example, there is no flexibility in this solution.

In order to eliminate all above disadvantages, modern **BUSBAR SYSTEMS** are developed. **EAE** manufactures **E-LINE** busbar systems from 25A up to 6.300A in order to convert above disadvantages to advantages. High technological, modular structured **E-LINE** busbar systems allow users to get safe energy how much and where ever they need by tap off boxes, easy and efficient planning, short installation time, better heat dissipation, automatic length adjustments, re-design / re-using capability, better electrical characteristics, etc. **E-LINE** busbar systems are designed and certified as per IEC 60439-2/1 standard.

Standard Prefabricated Structure
E-Line KX busbar system can be adapted to any kind of building structure using. Space-saving prefabricated components.
All necessary components and fitting elements are manufactured items.

**** Special components can be manufactured in one week on request.***

Rapid and Efficient Installation
It has been important to keep abreast with the rapidly improving building technologies in civil engineering, the installation time was we have lowered by reducing the number of bolts on the joint points of the busbar.

Flexible Power Supply
Tap-off points at short intervals make electrical power available in all locations; the power supply can be adapted to different production processes simply by relocating the tap-off unit.

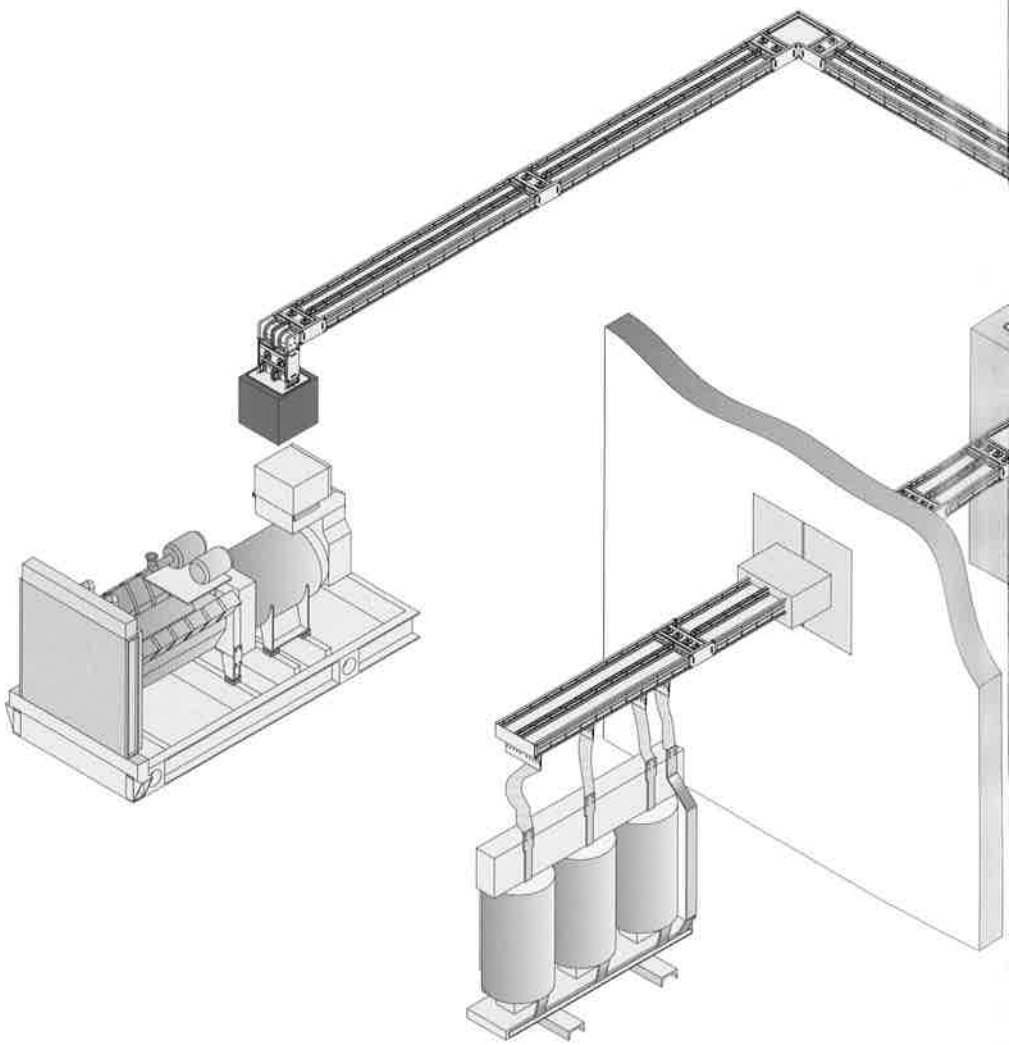

ELINEKX

Technical Features

Hybrid Insulation

The perfect design for high current busbar systems is the "compact structure" where tin plated and insulated with B class polyester film and epoxy coated on conductors are tightly placed into the extruded aluminium housing (Figure 1).

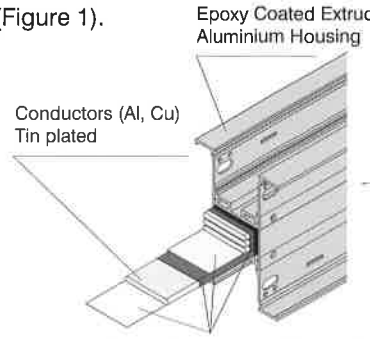

Figure 1

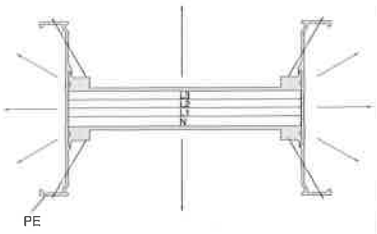

Figure 2

Heat Transfer

"In compact structure" there is no empty space filled with air and heat is easily transferred to the environment by the housing that works like a heat-shink (Figure 2).

Minimum Voltage Drop

In **E-Line KX**, inductive reactance is very low due to closely placed conductors.
The voltage drop comparison of compact and ventilated busbar that have same cross sectional area prove the importance of the compact structure.

High Short-Circuit Endurance

As there are no support points in "compact structure" momentum levers are not formed (Figure 1).
This feature ensures high short-circuit endurance (Figure 5).

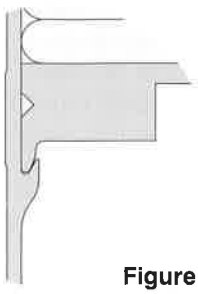

Figure 5

One Bolt Joint Ensures Safety and Easy Installation

E-Line KX Busbars are installed by tightening the "one bolt joint". Belleville spring washers on both ends of the bolt retains the original contact pressure, ensuring a more secure, reliable and maintenance - free joint.
E-Line KX Busbar Systems are easily installed (Figures 3-4).

**** The bolt is tightened to 83 Nm (60 lbft) using the torque spanner.***

Figure 3

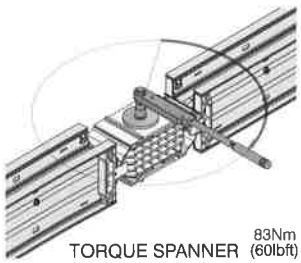

Figure 4

Easy and Safe Installation:

Due to alignment piece on the joint point, block joint element and busbar tray are aligned. This makes installation easier and correct on the right axes. (Figure 6).



Figure 6

ELINEKX

▶▶ Distribution & Horizontal Applications

While designing an electrical distribution system with E-Line KX a few approximate details will be necessary.

- Location, number, type and approximate ratings of loads,
- Transformer rates and short-circuit capacities, Utilization factor=a,
- System coordination with other distribution system (heat, water, etc),
- Determining the route of E-Line KX on layout, If necessary, coordination of E-Line KX Busbar with E-Line KO-II runs,
- Deciding on suitable hanger types.

Utilization Factor (α)

Utilization factor (α) depends on the type and number of loads.
It is usually around 0.7 or lower. The utilization factor of a line that supplies electricity to motors and lighting systems is usually lower than 0.6.
It is as low as 0.30 in weld shops of car factories, it can be 1 in lines where only one big load is supplied.

Voltage Drop

For practical voltage drop calculation, necessary values, formula and easy calculation methods are given on the technical characteristics table on pages 6-9.

Rated Current

The current is calculated using the following equation:

$$I_B = \frac{P.\alpha}{\sqrt{3}.U.\cos\varphi}$$

I_B = Operation current (A)
P = Installed load (W)
α = Utilization factor
U = Supply voltage (V)

- Busbar current rating is chosen as equal to or higher then the calculated I_B current.
- After the voltage drop calculation if the chosen current rate is not convenient, a higher rating is chosen.

Short-Circuit

Tested short-circuit capacities are given on technical characteristics table on pages 6-9.

Busbar Installation Plan

Our distributor's project & design departments will help you for preparing the installation plans on request.

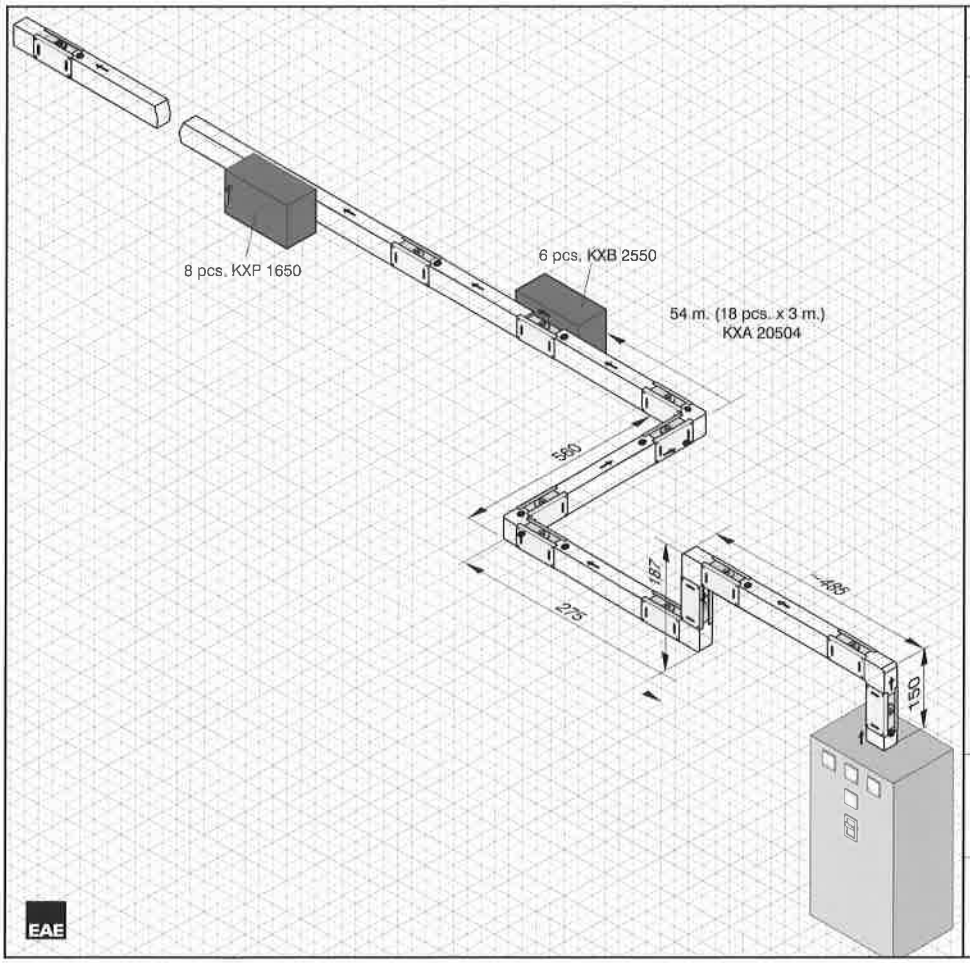

Components List

Item	Components		Quantity
1	KXA 20504 - STD	Busbar (20 x 3m.)	60 m.
2	KXA 20504 - D	Downwards Elbow	2 pcs.
3	KXA 20504 - R	Right Elbow	1 pc.
4	KXA 20504 - U	Upwards Elbow	1 pc.
5	KXA 20504 - L	Left Elbow	1 pc.
6	KXA 20504 - P11	Panel Connection	1 pc.
7	KXA 20504 - S10	End Closer	1 pc.
8	KXA 20504 - X95	Special Straight Length	1 pc.
8	KXA 20504 - X120	Special Straight Length	1 pc.
9	KXA 20504 - X122	Special Straight Length	1 pc.
10	KXA 20504 - X200	Special Straight Length	1 pc.
11	KXA 20504 - X174	Special Straight Length	1 pc.
12	KXP 1650	Tap-off Box	8 pcs.
13	KXB 2550	Tap-off Box	6 pcs.

Company : Demir Makine
Project : II.OSB Tesisleri
Project No : 1128

Prepared by
Name : Abdullah ELDELEKLİ
Date : 02 / 01 / 2009
Signature :

Project Sample

ELINEKX

▶▶ Riser & Vertical Applications

As each building's structure is different than the other for vertical applications of **E-Line KX** special projects has to be designed.

The details on this page briefly explain the necessary information for drawing a vertical application project.

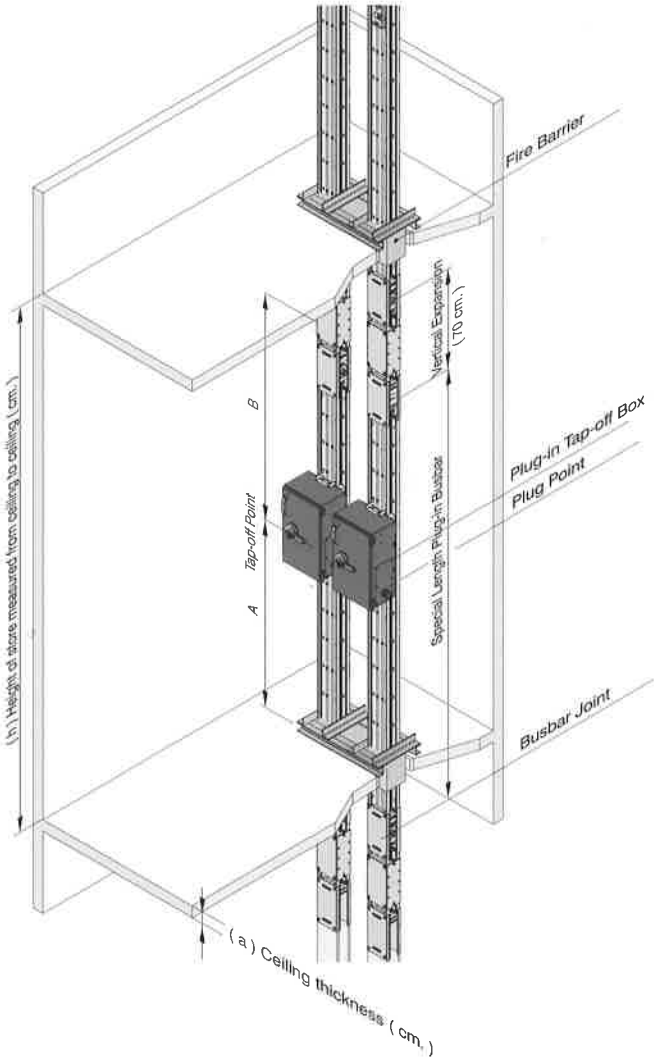

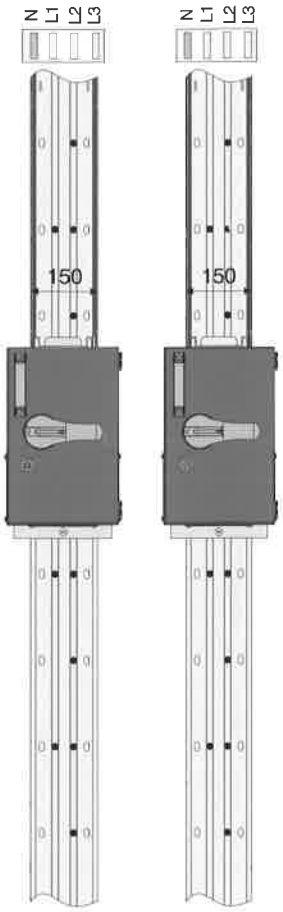

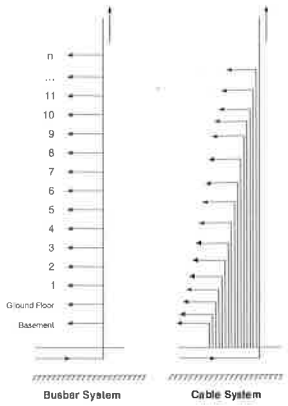

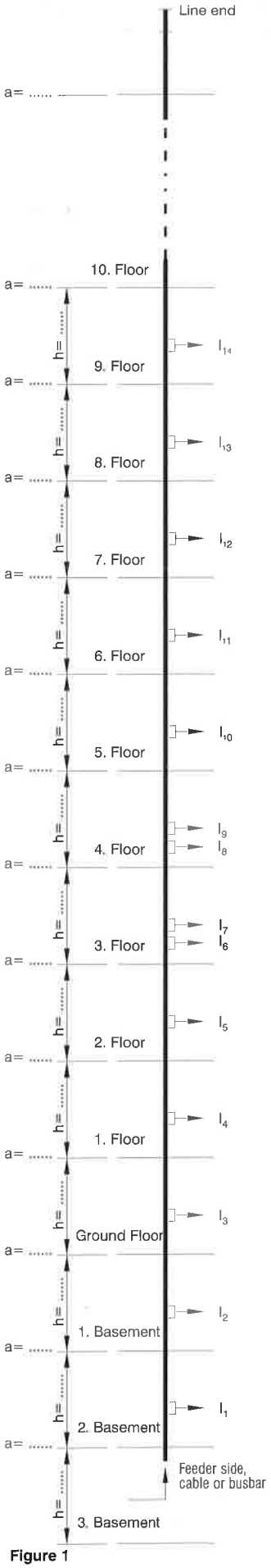

Figure 1

Project Design

The details below should be sent to our Project & Design department.

- Location and dimensions of the floor penetration where busbar will be installed.
- Number, height and ceiling thickness of storeys. (a=..., h=...)
- Connected load for each storey.
- Supply type of the vertical line (busbar or cable).

Please send the information to us by fax or e-mail with a sample drawing in Figure 1.

ELINEKX

▶▶ Technical Characteristics

Aluminium Conductor (Al)

Rated Current	I_n	A	630	800	1000	1250	1350	1600
Busbar Code			06	08	10	12	14	17
Standards	TS EN / DIN EN / BS EN / IEC 60439-1/2							
Rated Insulation Voltage	Ui	V	1000					
Rated Operational Voltage	Ue	V	1000					
Rated Frequency	f	Hz	50 / 60					
Pollution Degree	III							
Protection Degree	IP55							
Measures For Protection Against Electric Shock	Basic protection (HD 60364-4-41,clause A1)							
Housing Material	RAL 7038 epoxy polyester coated special aluminium alloy extruded housing.							
Rated Short-time Withstand Current (1s)	Icw	kArms	25	35	50	60	60	80
Rated Peak Withstand Current	Ipk	kA	52,5	73,5	105	132	132	176
Rated Short-time Withstand Current For Neutral Conductor (1s)	Icw	kA	15	21	30	36	36	48
Rated Peak Withstand Current For Neutral Conductor	Ipk	kA	30	44,1	63	75,6	75,6	100,8
Rated Short-time Withstand Current For Protection Degree (1s)	Icw	kA	15	21	30	36	36	48
Rated Peak Withstand Current For Protection Degree	Ipk	kA	30	44,1	63	75,6	75,6	100,8
PHASE CONDUCTORS								
The Mean Ohmic Resistance at 20°C and at I_n	R_{20}	mΩ/m	0,119	0,088	0,060	0,044	0,039	0,030
Mean Ohmic Resistance at the Steady State Operation Temp. (θ1) and at I_n	R_1	mΩ/m	0,132	0,119	0,081	0,059	0,052	0,040
Mean Ohmic Reactance at the Steady State Operation Temp. (θ1) and at I_n	X_1	mΩ/m	0,100	0,040	0,020	0,018	0,018	0,015
Mean Ohmic Impedance at the Steady State Operation Temp. (θ1) and at I_n	Z_1	mΩ/m	0,166	0,126	0,083	0,062	0,055	0,043
SECTIONS								
L1, L2, L3, N		mm²	240	330	480	660	750	960
PE (for 4 ½ conductors)		mm²	120	165	240	330	375	480
PE (for 5 conductors)		mm²	240	330	480	660	750	960
Housing Cross Section (Aluminium)		mm²	1686	1788	1894	2050	2128	2314
Conductor Size		mmxmm	6x40	6x55	6x80	6x110	6x125	6x160
Weight - 4 Conductors		kg/m	7,9	9,2	11,3	13,9	15,2	18,3
Weight - 5 Conductors		kg/m	8,6	10,2	12,8	15,9	17,5	21,1
Method of Impedance Under Fault Conditions (1)								
Method Ohmic Resistance at 20°C	$R_{b0\text{-}ph\text{-}ph}$	mΩ/m	0,264	0,187	0,128	0,094	0,083	0,069
Method Ohmic Resistance at 20°C	$R_{b0\text{-}ph\text{-}N}$	mΩ/m	0,273	0,200	0,136	0,101	0,090	0,072
Method Ohmic Resistance at 20°C (Housing)	$R_{b0\text{-}ph\text{-}PE}$	mΩ/m	0,180	0,154	0,108	0,092	0,092	0,071
Mean Ohmic Resistance at the Steady State Condition (θ1)	$R_{b1\text{-}ph\text{-}ph}$	mΩ/m	0,296	0,204	0,141	0,101	0,088	0,075
Mean Ohmic Resistance at the Steady State Condition (θ1)	$R_{b1\text{-}ph\text{-}N}$	mΩ/m	0,306	0,219	0,150	0,108	0,096	0,079
Mean Ohmic Resistance at the Steady State Condition (θ1) (Housing)	$R_{b1\text{-}ph\text{-}PE}$	mΩ/m	0,202	0,168	0,119	0,099	0,098	0,078
Mean Ohmic Reactance at the Rated Frequency (f)	$X_{b\text{-}ph\text{-}ph}$	mΩ/m	0,044	0,044	0,036	0,037	0,035	0,024
Mean Ohmic Reactance at the Rated Frequency (f)	$X_{b\text{-}ph\text{-}N}$	mΩ/m	0,083	0,063	0,054	0,056	0,052	0,046
Mean Ohmic Reactance at the Rated Frequency (f) (Housing)	$X_{b\text{-}ph\text{-}PE}$	mΩ/m	0,078	0,065	0,054	0,054	0,050	0,037

(1) Method of impedances had been used for determination of resistance, reactance and impedance values of the system under fault conditions (IEC 60439-2; N2b).

(2) Short-circuit tests had been performed for busbars having 4 1/2 conductors.

2000	2500	2500	3000	3200	4000	5000
20	**25**	**27**[2]	**32**	**33**	**40**	**50**
80	100	100	100	120	120	120
176	220	220	220	264	264	264
48	60	60	60	72	72	72
100,8	132	132	132	158,4	158,4	158,4
48	60	60	60	72	72	72
100,8	132	132	132	158,4	158,4	158,4
0,024	0,022	0,021	0,017	0,015	0,012	0,008
0,032	0,030	0,029	0,020	0,020	0,017	0,010
0,012	0,011	0,010	0,016	0,007	0,007	0,006
0,034	0,032	0,030	0,025	0,021	0,018	0,012
1200	1320	1500	1680	1920	2400	3600
600	660	750	840	960	1200	1800
1200	1320	1500	1680	1920	2400	3600
2518	3912	2764	4224	4411	4848	7128
6x200	2(6x110)	6x250	2(6x140)	2(6x160)	2(6x200)	3(6x200)
21,7	27,3	28,5	32,5	35,9	42,9	63,9
25,3	31,2	34,2	37,5	41,6	50,0	74,6
0,053	0,052	0,044	0,041	0,036	0,029	0,018
0,055	0,058	0,047	0,046	0,041	0,032	0,022
0,067	0,066	0,056	0,055	0,052	0,050	0,034
0,057	0,058	0,065	0,045	0,040	0,031	0,019
0,060	0,065	0,070	0,050	0,045	0,035	0,023
0,073	0,073	0,084	0,060	0,058	0,054	0,036
0,019	0,007	0,024	0,005	0,014	0,013	0,012
0,027	0,006	0,030	0,005	0,020	0,022	0,014
0,031	0,011	0,031	0,009	0,017	0,027	0,015

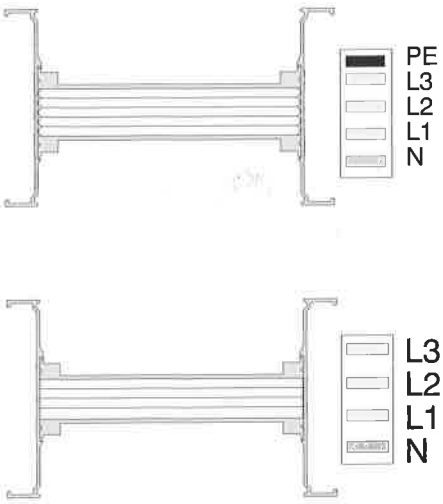

Voltage Drop Calculation

Generally Voltage drop of a busbar system can be calculated with the following formula.

$$\Delta U = \sqrt{3}.L.I.(R_1 .\cos\varphi + X_1.\sin\varphi)\ 10^{-3}\ [V]$$

ΔU = Voltage Drop (V)
L = Line Length (m)
I = Line Current or Load (A)
R_1 = Resistance (mΩ/m)
X_1 = Inductive Reactance (mΩ/m)
$\cos\varphi$ = Power Factor

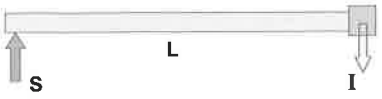

S = Supply Point

ELINEKX

▶▶ Technical Characteristics

Copper Conductor (Cu)

Rated Current	I_n	A	800	1000	1250	1350	1600	2000	2250
Busbar Code			08	10	12	14	16	20	21
Standards	TS EN / DIN EN / BS EN / IEC 60439-1/2								
Rated Insulation Voltage	Ui	V	1000						
Rated Operational Voltage	Ue	V	1000						
Rated Frequency	f	Hz	50 / 60						
Pollution Degree	III								
Protection Degree	IP55								
Measures For Protection Against Electric Shock	Basic protection (HD 60364-4-41,clause A1)								
Housing Material	RAL 7038 epoxy polyester coated special aluminium alloy extruded housing								
Rated Short-time Withstand Current (1s)	Icw	kArms	40	50	60	60	80	80	80
Rated Peak Withstand Current	Ipk	kA	84	105	132	132	176	176	176
Rated Short-time Withstand Current For Neutral Conductor (1s)	Icw	kA	24	30	36	36	48	48	48
Rated Peak Withstand Current For Neutral Conductor	Ipk	kA	50,4	63	75,6	75,6	100,8	100,8	100,8
Rated Short-time Withstand Current For PE (1s)	Icw	kA	24	30	36	36	48	48	48
Rated Peak Withstand Current For PE	Ipk	kA	50,4	63	75,6	75,6	100,8	100,8	100,8
PHASE CONDUCTORS									
The Mean Ohmic Resistance at 20°C and at I_n	R_{20}	mΩ/m	0,075	0,055	0,043	0,038	0,027	0,021	0,018
Mean Ohmic Resistance at the Steady State Operation Temp. (θ1) and at I_n	R_1	mΩ/m	0,101	0,072	0,058	0,051	0,037	0,028	0,026
Mean Ohmic Reactance at the Steady State Operation Temp. (θ1) and at I_n	X_1	mΩ/m	0,030	0,030	0,027	0,026	0,019	0,015	0,013
Mean Ohmic Impedance at the Steady State Operation Temp. (θ1) and at I_n	Z_1	mΩ/m	0,105	0,078	0,064	0,057	0,041	0,032	0,029
SECTIONS									
L1, L2, L3, N		mm²	240	330	420	480	660	840	960
PE (for 4 ½ conductors)		mm²	120	165	210	240	330	420	480
PE (for 5 conductors)		mm²	240	330	420	480	660	840	960
Housing Cross Section (Aluminium)		mm²	1686	1788	1842	1894	2050	2206	2314
Conductor Size		mmxmm	6x40	6x55	6x70	6x80	6x110	6x140	6,1x160
Weight - 4 Conductors		kg/m	14,4	18,3	22	24,5	32,1	39,6	44,6
Weight - 5 Conductors		kg/m	16,8	21,5	26,1	29,2	38,5	47,9	54,1
Method of Impedance Under Fault Conditions (1)									
Method Ohmic Resistance at 20°C	$R_{b0\text{-}ph\text{-}ph}$	mΩ/m	0,162	0,117	0,094	0,083	0,059	0,047	0,040
Method Ohmic Resistance at 20°C	$R_{b0\text{-}ph\text{-}N}$	mΩ/m	0,171	0,128	0,062	0,086	0,065	0,051	0,044
Method Ohmic Resistance at 20°C (Housing)	$R_{b0\text{-}ph\text{-}PE}$	mΩ/m	0,136	0,111	0,060	0,092	0,077	0,064	0,054
Mean Ohmic Resistance at the Steady State Condition (θ1)	$R_{b1\text{-}ph\text{-}ph}$	mΩ/m	0,173	0,122	0,100	0,088	0,063	0,050	0,042
Mean Ohmic Resistance at the Steady State Condition (θ1)	$R_{b1\text{-}ph\text{-}N}$	mΩ/m	0,182	0,133	0,107	0,096	0,070	0,055	0,048
Mean Ohmic Resistance at the Steady State Condition (θ1) (Housing)	$R_{b1\text{-}ph\text{-}PE}$	mΩ/m	0,144	0,115	0,103	0,098	0,082	0,069	0,062
Mean Ohmic Reactance at the Rated Frequency (f)	$X_{b\text{-}ph\text{-}ph}$	mΩ/m	0,057	0,042	0,052	0,035	0,029	0,024	0,021
Mean Ohmic Reactance at the Rated Frequency (f)	$X_{b\text{-}ph\text{-}N}$	mΩ/m	0,080	0,066	0,065	0,052	0,042	0,019	0,035
Mean Ohmic Reactance at the Rated Frequency (f) (Housing)	$X_{b\text{-}ph\text{-}PE}$	mΩ/m	0,072	0,067	0,046	0,050	0,038	0,037	0,031

(1)Method of impedances had been used for determination of resistance, reactance and impedance values of the system under fault conditions (IEC 60439-2; N2b).

2500	2000	2500	3300	3600	4000	4250	5000	6300
25	22	26	32	36	40	43	50	63
80	70	100	120	120	120	120	120	120
176	154	220	264	264	264	264	264	264
48	42	60	72	72	72	72	72	72
100,8	88,2	132	158,4	158,4	158,4	158,4	158,4	158,4
48	42	60	72	72	72	72	72	72
100,8	88,2	132	158,4	158,4	158,4	158,4	158,4	158,4
0,015	0,027	0,019	0,014	0,012	0,011	0,009	0,008	0,005
0,019	0,037	0,025	0,019	0,017	0,015	0,013	0,010	0,007
0,011	0,015	0,013	0,010	0,006	0,006	0,006	0,006	0,005
0,022	0,040	0,028	0,021	0,018	0,016	0,014	0,012	0,008
1200	660	960	1320	1500	1680	1920	2400	3600
600	330	480	660	750	840	960	1200	1800
1200	660	960	1320	1500	1680	1920	2400	3600
2518	3340	3600	3912	4068	4224	4411	4848	7128
6x200	2(6x55)	2(6x80)	2(6x110)	2(6x125)	2(6x140)	2(6,1x160)	2(6x200)	3(6x200)
54,7	35,9	48,5	63,5	71,1	78,6	88,6	108,8	162,8
66,5	42,4	57,9	76,5	85,8	95,2	107,5	132,4	198,2
0,033	0,064	0,045	0,017	0,031	0,022	0,023	0,017	0,012
0,037	0,073	0,069	0,019	0,037	0,024	0,016	0,019	0,009
0,053	0,073	0,066	0,028	0,051	0,038	0,023	0,032	0,015
0,035	0,071	0,050	0,018	0,033	0,022	0,025	0,018	0,013
0,040	0,081	0,059	0,044	0,039	0,033	0,024	0,020	0,015
0,057	0,082	0,072	0,060	0,053	0,048	0,039	0,035	0,025
0,021	0,007	0,006	0,003	0,005	0,020	0,011	0,009	0,008
0,029	0,006	0,005	0,005	0,005	0,025	0,016	0,014	0,001
0,030	0,006	0,007	0,007	0,007	0,025	0,016	0,014	0,011

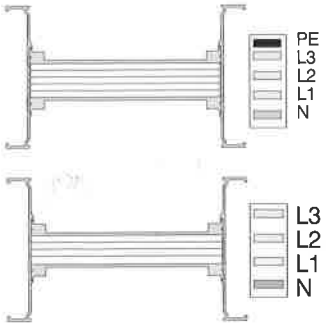

Voltage Drop Calculation

Generally Voltage drop of a busbar system can be calculated with the following formula.

$$\Delta U = \sqrt{3}.L.I.(R_1 .Cos\varphi + X_1.Sin\varphi)\ 10^{-3}\ [V]$$

ΔU = Voltage Drop (V)
L = Line Length (m)
I = Line Current or Load (A)
R_1 = Resistance (mΩ/m)
X_1 = Inductive Reactance (mΩ/m)
$Cos\varphi$ = Power Factor



S = Supply Point

ELINEKX

▶▶ Order Code System

BUSBAR TYPE
CONDUCTOR MATERIAL
BUSBAR CODE
PROTECTION DEGREE
CONDUCTOR CONFIGURATION
UTILIZATION TYPE P - Plug-in / B - Bolt-on
COMPONENT

KX | A | 16 | 5 | 04 - B - TR41

Busbar Type

Aluminium (Al) A / Copper (Cu) C — CONDUCTOR MATERIAL

KXA - Al Conductor		KXC - Cu Conductor		Conductor Size
Rated Current	Busbar Code	Rated Current	Busbar Code	
630	06	800	08	6x40*
800	08	1000	10	6x55
-	-	1250	12	6x70
1000	10	1350	14	6x80
1250	12	1600	16	6x110
1350	14	-	-	6x125
-	-	2000	20	6x140
1600	17	-	-	6x160
-	-	2250	21	6,1x160
2000	20	2500	25	6x200
2500	27	-	-	6x250
-	-	2000	22	2(6x55)
-	-	2500	26	2(6x80)
2500	25	3300	32	2(6x110)
-	-	3600	36	2(6x125)
3000	32	4000	40	2(6x140)
3200	33	-	-	2(6x160)
-	-	4250	43	2(6,1 x160)
4000	40	5000	50	2(6x200)
5000	50	6300	63	3(6x200)

*** Tap-off box can not be fixed to this size busbar.**

BUSBAR CODE

IP 55 5 — PROTECTION DEGREE

Number of Conductors	Code	Conductor Configuration								
		L1	L2	L3	N	PE	½ PE	CPE	½ CPE	PE (Housing)
3 Conductors	03	✓	✓	✓						✓
4 Conductors	04	✓	✓	✓	✓					✓
4 ½ Conductors	07	✓	✓	✓	✓		✓			✓
4 ½ Conductors	08	✓	✓	✓	✓				✓	✓
5 Conductors	05	✓	✓	✓	✓	✓				✓
5 Conductors	09	✓	✓	✓	✓			✓		✓

*TYPE	Utilization Type
(B) Bolt-on	Energy is supplied from the joints.
(P) Plug-in	Energy is supplied from the joints and the plug-in points.

COMPONENTS

Standard Length	STD
Special Length	X
Upwards Elbow	U
Downwards Elbow	D
Right Elbow	R
Left Elbow	L
Left Horizontal Offset	LH
Right Horizontal Offset	RH
Upwards Vertical Offset	UV
Downwards Vertical Offset	DV
Upwards Left Combined Offset	KUL
Upwards Right Combined Offset	KUR
Downwards Left Combined Offset	KDL
Downwards Right Combined Offset	KDR
Left Upwards Combined Offset	KLU
Right Upwards Combined Offset	KRU
Left Downwards Combined Offset	KLD
Right Downwards Combined Offset	KRD
End Closer	S
Reduction	RD
Left Side Feeder "T"	TYL
Right Side Feeder "T"	TYR
Central Feeder "T"	TO
Horizontal Expansion	YDT
Vertical Expansion	DDT
Phase Transposition Module	FDM
Panel Connection	P10
Panel Connection	P11
Upwards Panel Connection	PU20
Upwards Panel Connection	PU21
Downwards Panel Connection	PD20
Downwards Panel Connection	PD21
Right Panel Connection	PR30
Right Panel Connection	PR31
Left Panel Connection	PL30
Left Panel Connection	PL31
Panel Connection	P40
Panel Connection	P41
Transformer Connection	TR11
Upwards Transformer Connection	TU21
Downwards Transformer Connection	TD21
Transformer Connection	TR31
Transformer Connection	TR41
Right Transformer Connection	TR51
Left Transformer Connection	TL51
Transformer Connection	TR61
Transformer Connection	TR71
Feeder Box	B10
Feeder Box	B11
Central Feeder Box	BO
Flexible	F

ELINEKX

▶▶ Standard Straight Length

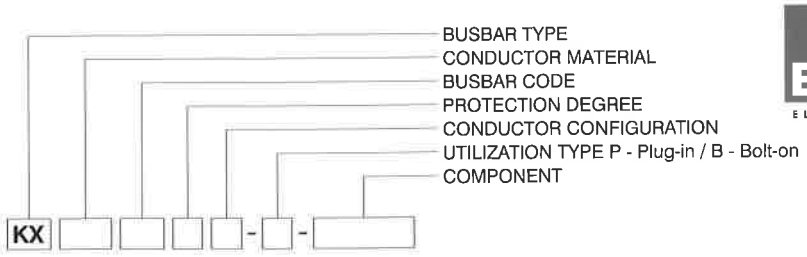

Bolt-on

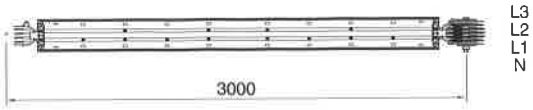

Electrical energy up to 1000 A can be supplied from the joints of bolt-on type by bolt-on tap-off boxes.

Note:
Busbar energy should be turned off, before installing bolt-on type tap-off boxes.

Plug-in

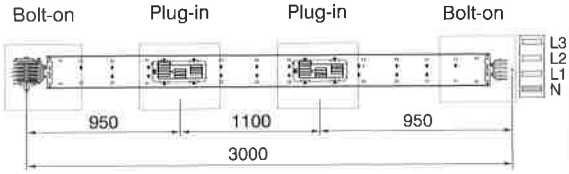

Electrical energy up to 1000 A can be supplied from the joints and up to 630 A can be supplied from the plus.

Note:
Please, determine number and side of plug-in points (single or double side).

Table For Outer Dimension of Busbars

KXA - Al Conductor		KXC - Cu Conductor		A
Rated Current	Busbar Code	Rated Current	Busbar Code	(mm)
630	06	800	08	91
800	08	1000	10	106
-	-	1250	12	121
1000	10	1350	14	131
1250	12	1600	16	161
1350	14	-	-	176
-	-	2000	20	191
1600	17	-	-	211
-	-	2250	21	211
2000	20	2500	25	251
2500	27	-	-	301
-	-	2000	22	202
-	-	2500	26	252
2500	25	3300	32	312
-	-	3600	36	342
3000	32	4000	40	372
3200	33	-	-	412
-	-	4250	43	412
4000	40	5000	50	492
5000	50	6300	63	732

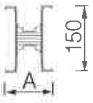

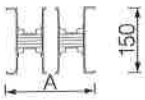

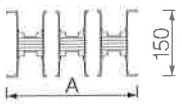

Bolt-on Standard - STD Straight Length Busbar

Sample Order:

2500 A, Aluminium, Bolt-on, IP 55, 4 conductors

KXA 25504 - B - STD

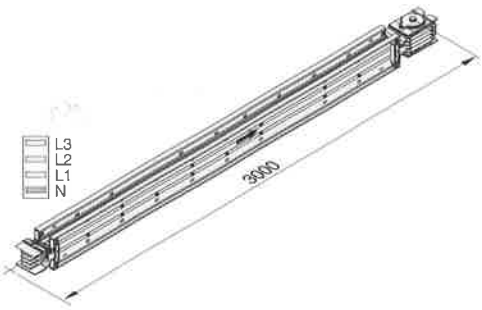

Applications:

- As feeder or sub-feeder line,
- Where a load has to be supplied from the busbar.

Plug-in Standard - STD Straight Length Busbar

Sample Order:

1250 A, Copper, Plug-in, IP 55, 4 conductors

KXC 12504 - P - STD

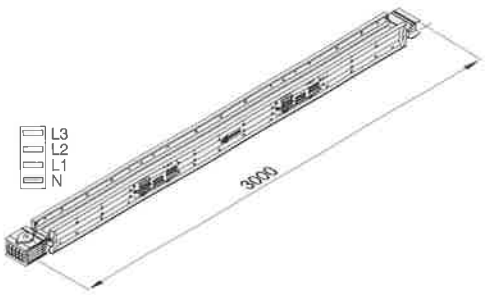

Applications:

- In application of bolt-on
- As vertical feeder line high rise buildings
- For frequent energy supply
- If continuous energy needed,while tap-offs installed.

Special Straight Length



Special Straight Length in (cm)

Sample Order:

2500 A, Copper, Bolt-on, IP 55, 4 conductors, 147cm

KXC 25504 - B - X - 147

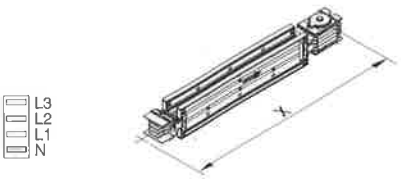

Note:
Bolt-on Minimum Length = 35cm
Plug-in Minimum Length = 100cm

ELINEKX

▶▶ Elbows

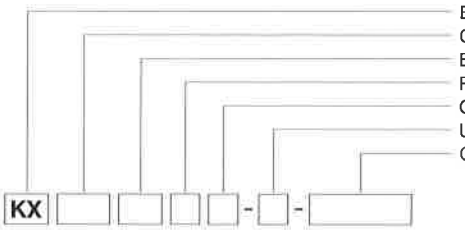

Upwards Elbow - U

Sample Order:

3300 A, Copper, Bolt-on, IP 55, 4 conductors

KXC 32504 - B - U



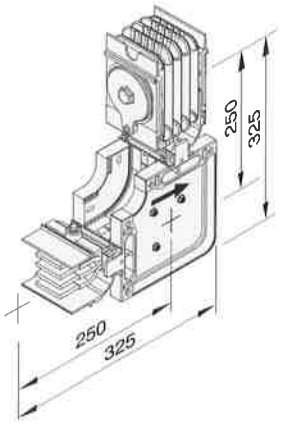

Downwards Elbow - D

Sample Order:

3300 A, Copper, Bolt-on, IP 55, 4 conductors

KXC 32504 - B - D



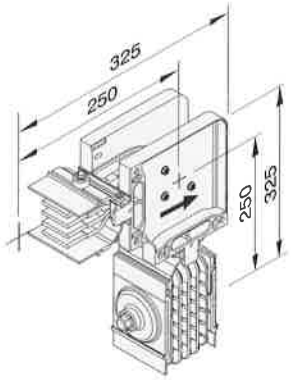

Left Elbow - L

Sample Order:

2000 A, Copper, Bolt-on, IP 55, 4 conductors

KXC 20504 - B - L



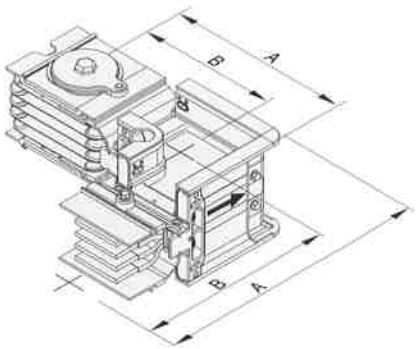

Right Elbow - R

Sample Order:

2000 A, Aluminium, Bolt-on, IP 55, 4 conductors

KXA 20504 - B - R



KXA - Al Conductor		KXC - Cu Conductor		A	B
Rated Current	Busbar Code	Rated Current	Busbar Code	(mm)	(mm)
630	06	800	08	267	222
800	08	1000	10	282	229
-	-	1250	12	297	236
1000	10	1350	14	307	241
1250	12	1600	16	337	256
1350	14	-	-	352	264
-	-	2000	20	367	271
1600	17	-	-	387	281
-	-	2250	21	387	281
2000	20	2500	25	427	301
2500	27	-	-	477	326
-	-	2000	22	377	276
-	-	2500	26	427	301
2500	25	3300	32	487	331
-	-	3600	36	517	346
3000	32	4000	40	547	361
3200	33	-	-	587	381
-	-	4250	43	587	381
4000	40	5000	50	667	421
5000	50	6300	63	907	541

■ The dimensions given above are minumum values. ■ Please call us for non-standard components.

ELINEKX

▶▶ Elbows

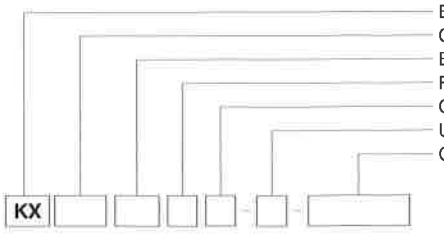

Left Horizontal Offset - LH

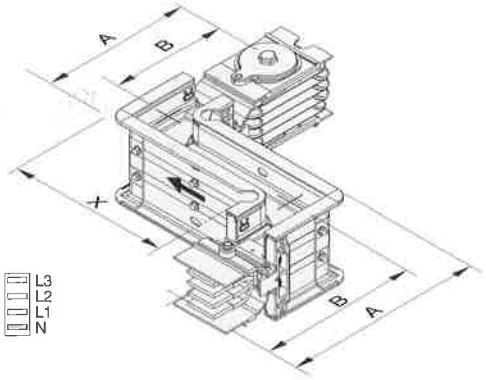

Sample Order:

X=60 cm, 3300 A, Copper Bolton, IP 55, 4 conductors

KXC 32504-B-LH60 - LH □□ (X cm)

Note:
X=min:28 cm,
max: *Please see table.
Used,if two horizontal elbows can not fit.

Right Horizontal Offset - RH

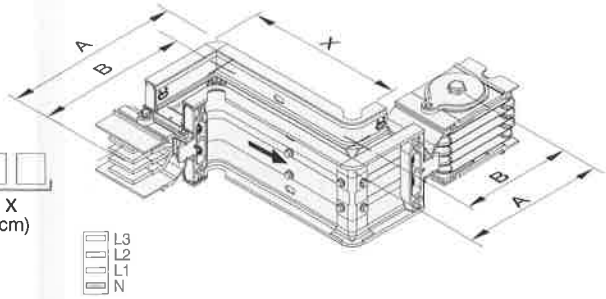

Sample Order:

X=60 cm, 3300 A, Copper Bolton, IP 55, 4 conductors

KXC 32504-B-RH60 - RH □□ (X cm)

Note:
X=min:28 cm,
max: *Please see table.
Used,if two horizontal elbows can not fit.

Upwards Vertical Offset - UV

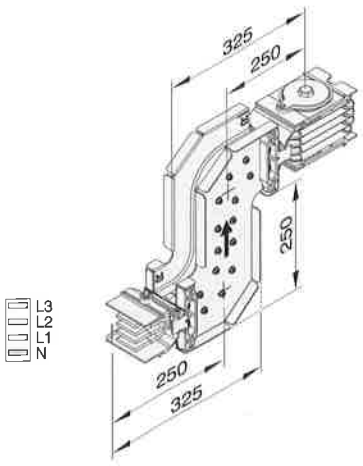

Sample Order:

Y=25 cm, 2000 A, Aluminium Bolt-on, IP 55, 5 conductors

KXA 20505-B-UV25 - UV □□ (Y cm)

Note:
Y=min:25 cm max:49 cm

Downwards Vertical Offset - DV

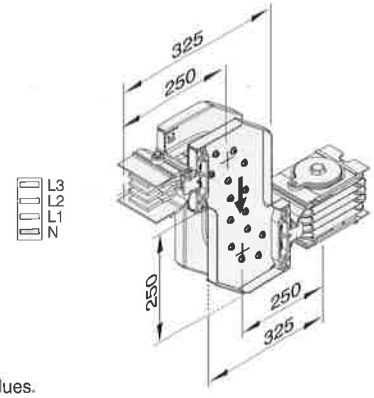

Sample Order:

Y=25 cm, 2000 A, Aluminium Bolt-on, IP 55, 5 conductors

KXA 20505-B-DV25 - DV □□ (Y cm)

Note:
Y=min:25 cm max:49 cm

KXA - Al Conductor		KXC - Cu Conductor		A	B	X
Rated Current	Busbar Code	Rated Current	Busbar Code	(mm)	(mm)	(mm)
630	06	800	08	267	222	442
800	08	1000	10	282	229	457
-	-	1250	12	297	236	472
1000	10	1350	14	307	241	482
1250	12	1600	16	337	256	512
1350	14	-	-	352	264	527
-	-	2000	20	367	271	542
1600	17	-	-	387	281	562
		2250	21	387	281	562
2000	20	2500	25	427	301	602
2500	27	-	-	477	326	652
-	-	2000	22	377	276	552
-	-	2500	26	427	301	602
2500	25	3300	32	487	331	662
-	-	3600	36	517	346	692
3000	32	4000	40	547	361	722
3200	33	-	-	587	381	762
-	-	4250	43	587	381	762
4000	40	5000	50	667	421	842
5000	50	6300	63	907	541	1082

■ The dimensions given above are minumum values.

ELINEKX

▶▶ Elbows

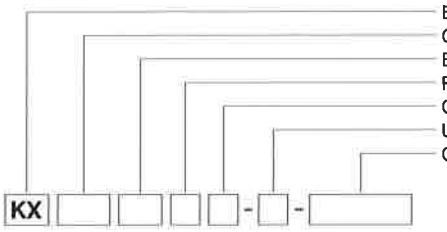

Upwards Left Combined Offset - K U L

Sample Order:

3300 A, Copper
Bolt-on, IP 55, 4 conductors

KXC 32504 - B - KUL

Note:
Y=min. 30 cm



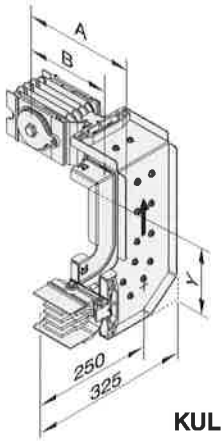

KUL

Upwards Right Combined Offset - K U R

Sample Order:

3200 A, Aluminium
Bolt-on, IP 55, 4 conductors

KXA 33504 - B - KUR

Note:
Y=min. 30 cm



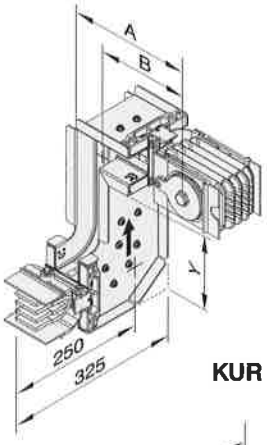

KUR

Downwards Left Combined Offset - K D L

Sample Order:

3300 A, Copper
Bolt-on, IP 55, 4 conductors

KXC 32504 - B - KDL

Note:
Y=min. 30 cm



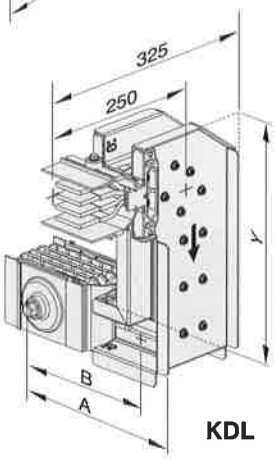

KDL

Downwards Right Combined Offset - K D R

Sample Order:

3200 A, Aluminium
Bolt-on, IP 55, 4 conductors

KXA 33504 - B - KDR

Note:
Y=min. 30 cm



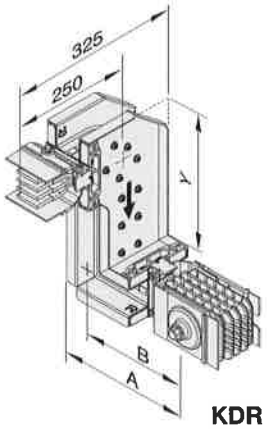

KDR

KXA - Al Conductor		KXC - Cu Conductor		A	B
Rated Current	Busbar Code	Rated Current	Busbar Code	(mm)	(mm)
630	06	800	08	267	222
800	08	1000	10	282	229
-	-	1250	12	297	236
1000	10	1350	14	307	241
1250	12	1600	16	337	256
1350	14	-	-	352	264
-	-	2000	20	367	271
1600	17	-	-	387	281
-	-	2250	21	387	281
2000	20	2500	25	427	301
2500	27	-	-	477	326
-	-	2000	22	377	276
-	-	2500	26	427	301
2500	25	3300	32	487	331
-	-	3600	36	517	346
3000	32	4000	40	547	361
3200	33	-	-	587	381
-	-	4250	43	587	381
4000	40	5000	50	667	421
5000	50	6300	63	907	541

■ Please call us for non-standard components.

■ The dimensions given above are minumum values.

ELINEKX

▶▶ Elbows

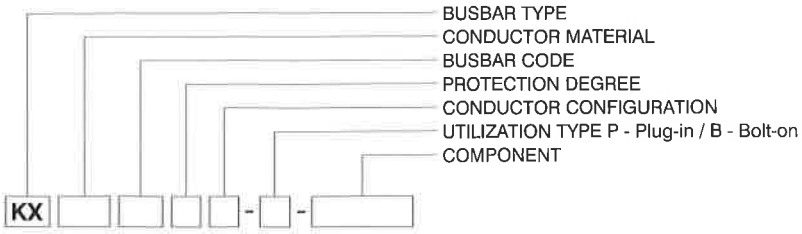

Left Upwards Combined Offset - K L U

Sample Order:

3200 A, Aluminium
Bolt-on, IP 55, 4 conductors

KXA 33504 - B - KLU

Note:
Y=min. 30 cm

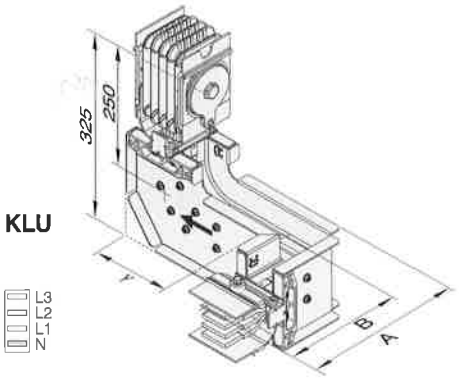

KLU

Right Upwards Combined Offset - K R U

Sample Order:

3300 A, Copper
Bolt-on, IP 55, 4 conductors

KXC 32504 - B - KRU

Note:
Y=min. 30 cm

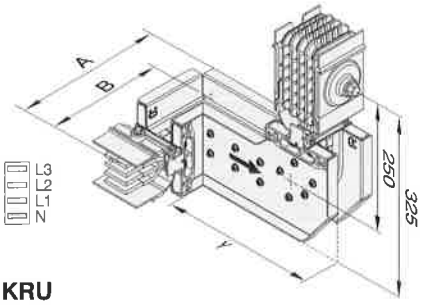

KRU

Left Downwards Combined Offset - K L D

Sample Order:

3200 A, Aluminium
Bolt-on, IP 55, 4 conductors

KXA 33504 - B - KLD

Note:
Y=min. 30 cm

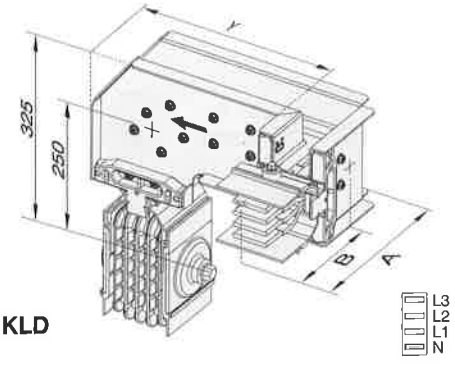

KLD

Right Downwards Combined Offset - K R D

Sample Order:

3300 A, Copper
Bolt-on, IP 55, 4 conductors

KXC 32504 - B - KRD

Note:
Y=min. 30 cm

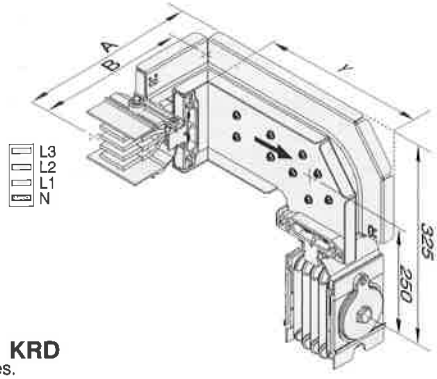

KRD

KXA - Al Conductor		KXC - Cu Conductor		A	B
Rated Current	Busbar Code	Rated Current	Busbar Code	(mm)	(mm)
630	06	800	08	267	222
800	08	1000	10	282	229
-	-	1250	12	297	236
1000	10	1350	14	307	241
1250	12	1600	16	337	256
1350	14	-	-	352	264
-	-	2000	20	367	271
1600	17	-	-	387	281
-	-	2250	21	387	281
2000	20	2500	25	427	301
2500	27	-	-	477	326
-	-	2000	22	377	276
-	-	2500	26	427	301
2500	25	3300	32	487	331
-	-	3600	36	517	346
3000	32	4000	40	547	361
3200	33	-	-	587	381
-	-	4250	43	587	381
4000	40	5000	50	667	421
5000	50	6300	63	907	541

■ Please call us for non-standard components.

■ The dimensions given above are minumum values.

ELINEKX

▶▶ Standard Components

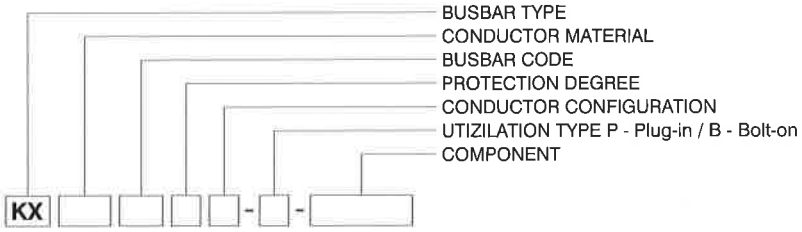

Reduction
Is used to change the busbar cross section.

NOTE:
Decisions and selection of reduction module and protection on lower side is under the customer's responsibility.

Reduction - RD□□
Reduced Busbar Current

Sample Order:

2000A / 1600A, Aluminium, Bolt-on, IP 55, 4 conductors

KXA 20504 - B - RD17

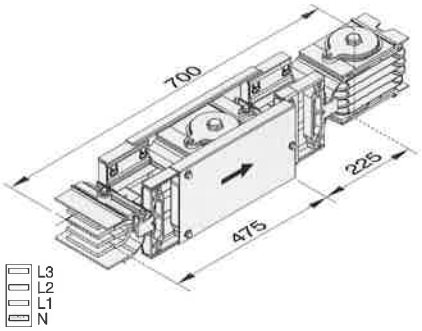

Reducers Table

KXA - Al Conductor

Rated Current	Reduced Busbar Current											
	06	08	10	12	14	17	20	25	27	32	33	40
800	✓	-	-	-	-	-	-	-	-	-	-	-
1000	✓	✓	-	-	-	-	-	-	-	-	-	-
1250	-	✓	✓	-	-	-	-	-	-	-	-	-
1350	-	-	✓	✓	-	-	-	-	-	-	-	-
1600	-	-	-	✓	✓	-	-	-	-	-	-	-
2000	-	-	-	-	✓	✓	-	-	-	-	-	-
2500	-	-	-	-	-	✓	✓	-	-	-	-	-
2500	-	-	-	-	-	✓	✓	-	-	-	-	-
3000	-	-	-	-	-	-	✓	✓	✓	-	-	-
3200	-	-	-	-	-	-	✓	✓	✓	-	-	-
4000	-	-	-	-	-	-	-	✓	✓	✓	✓	-
5000	-	-	-	-	-	-	-	-	-	✓	✓	✓

1 ↓ 2 →

KXC - Cu Conductor

Rated Current	Reduced Busbar Current														
	08	10	12	14	16	20	21	22	25	26	32	36	40	43	50
1000	✓	-	-	-	-	-	-	-	-	-	-	-	-	-	-
1250	✓	✓	-	-	-	-	-	-	-	-	-	-	-	-	-
1350	-	✓	✓	-	-	-	-	-	-	-	-	-	-	-	-
1600	-	-	✓	✓	-	-	-	-	-	-	-	-	-	-	-
2000	-	-	-	✓	✓	-	-	-	-	-	-	-	-	-	-
2000	-	-	-	✓	✓	-	-	-	-	-	-	-	-	-	-
2250	-	-	-	-	✓	✓	-	✓	-	-	-	-	-	-	-
2500	-	-	-	-	-	✓	✓	✓	-	-	-	-	-	-	-
2500	-	-	-	-	-	✓	✓	✓	-	-	-	-	-	-	-
3300	-	-	-	-	-	-	-	✓	✓	✓	-	-	-	-	-
3600	-	-	-	-	-	-	-	-	✓	✓	✓	-	-	-	-
4000	-	-	-	-	-	-	-	-	-	-	✓	✓	-	-	-
4250	-	-	-	-	-	-	-	-	-	-	-	✓	✓	-	-
5000	-	-	-	-	-	-	-	-	-	-	-	-	✓	✓	-
6300	-	-	-	-	-	-	-	-	-	-	-	-	-	✓	✓

1 ↓ 2 →

See table below for ratings and busbar codes.

KXA - Al Conductor		KXC - Cu Conductor		A	B	C
Rated Current	Busbar Code	Rated Current	Busbar Code	(mm)	(mm)	(mm)
630	06	800	08	267	222	442
800	08	1000	10	282	229	456
-	-	1250	12	297	236	470
1000	10	1350	14	307	241	480
1250	12	1600	16	337	256	510
1350	14	-	-	352	264	525
-	-	2000	20	367	271	540
1600	17	-	-	387	281	560
		2250	21	387	281	560
2000	20	2500	25	427	301	602
2500	27	-	-	477	326	702
-	-	2000	22	377	276	552
-	-	2500	26	427	301	602
2500	25	3300	32	487	331	662
-	-	3600	36	517	346	692
3000	32	4000	40	547	361	722
3200	33	-	-	587	381	762
-	-	4250	43	587	381	762
4000	40	5000	50	667	421	842
5000	50	6300	63	907	541	1082

■ Please call us for non-standard components.

Right Side Feeder "T" - T Y R

Sample Order:

2500 A, Copper, Bolt-on, IP 55, 4 conductors

KXC 25504 - B - TYR

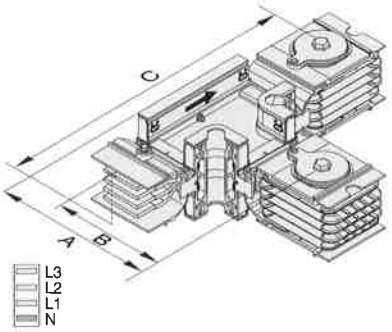

Left Side Feeder "T" - T Y L

Sample Order:

2500 A, Aluminium, Bolt-on, IP 55, 4 conductors

KXA 25504 - B - TYL

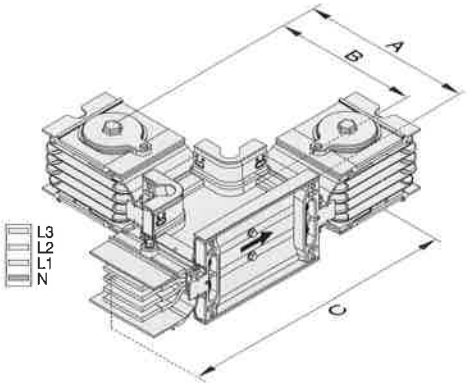

The dimensions given above are minumum values.

ELINEKX

▶▶ Expansions

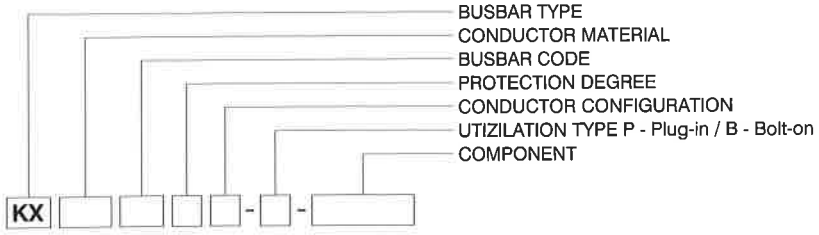

Central Feeder "T" - T O

Sample Order:

3300 A, Copper, Bolt-on,
IP 55, 4 conductors

KXC 32504 - B - TO

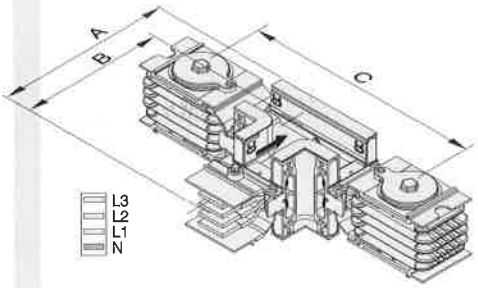

Vertical Expansion

Used for vertical applications in multi storey buildings.

- One vertical expansion unit is advised to be used at every floor between fixed support points.

Vertical Expansion - D D T

Sample Order:

2000 A, Copper, Bolt-on,IP 55
4 conductors

KXC 20504 - B - DDT

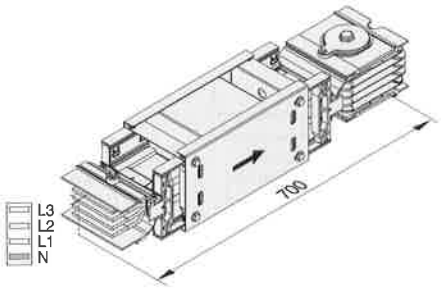

Horizontal Expansion

Used at every 40m in long horizontal straight lines and building expansion points.

Note:1) Horizontal expansion joint should be utilised if busbar line is crossing to adjacent through building expansion joints.

2) This module is used on the long busbar line (>75m.) where line is ended by end closure and is not fixed on the support rigidly.

3) Horizontal expansion joint has sufficient movement span of 25mm. max.

EAE requests to be consulted during design stage.

Horizontal Expansion - Y D T

Sample Order:

2500 A, Aluminium, Bolt-on,
IP 55, 4 conductors

KXA 25504 - B - YDT

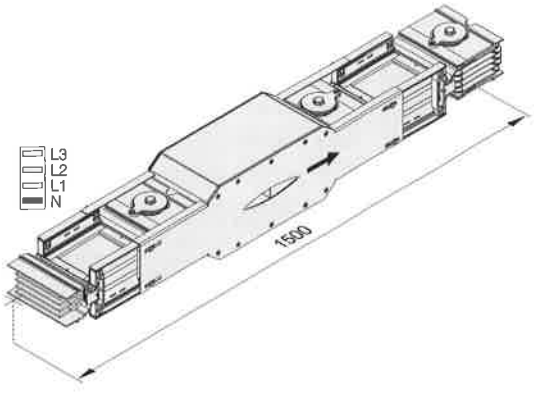

Attention!
The total length of the module should be adjusted to 1500 mm. after installation.

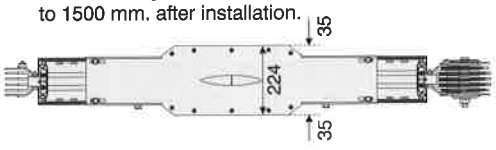

■ Please call us for non-standard components.

■ The dimensions given above are minumum values.

ELINEKX

▶▶ Expansions

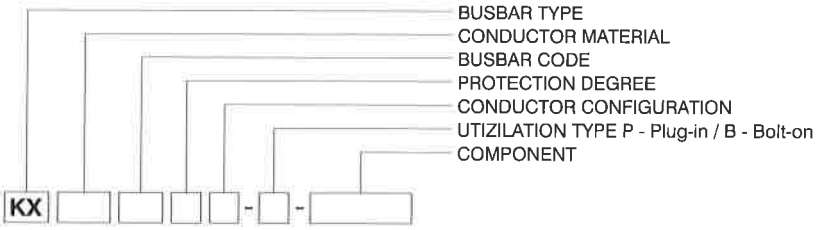

Phase Transposition Module

They used for transposition of phase sequence.

Phase Transposition Module - F D M

Sample Order:

2500 A, Aluminium, Bolt-on, IP 55, 4 conductors

KXA 25504 - B - FDM

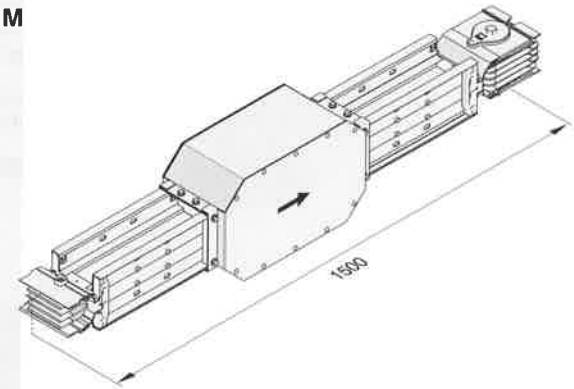

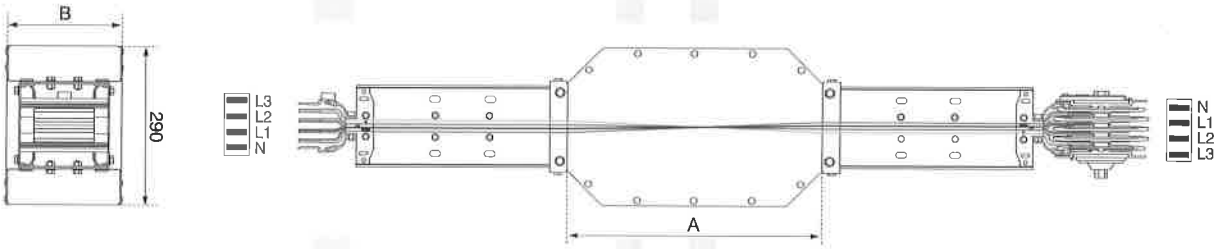

FDM Dimension Table

KXA - Al Conductor		KXC - Cu Conductor		Conductor	A	B
Rated Current	Busbar Code	Rated Current	Busbar Code		(mm)	(mm)
630	06	800	08	6x40	410	142
800	08	1000	10	6x55	410	157
-	-	1250	12	6x70	410	172
1000	10	1350	14	6x80	510	182
1250	12	1600	16	6x110	510	212
1350	14	-	-	6x125	510	227
-	-	2000	20	6x140	610	242
1600	17	-	-	6x160	610	262
-	-	2250	21	6,1x160	610	262
2000	20	2500	25	6x200	610	302
-	-	2000	22	2(6x55)	410	252
-	-	2500	26	2(6x80)	510	282
2500	25	3300	32	2(6x110)	510	342
-	-	3600	36	2(6x125)	510	372
3000	32	4000	40	2(6x140)	610	402
3200	33	-	-	2(6x160)	610	442
-	-	4250	43	2(6,1 x160)	610	442
4000	40	5000	50	2(6x200)	610	522

■ Please call us for non-standard components.

■ The dimensions given above are minumum values.

ELINEKX

▶▶ End Closers

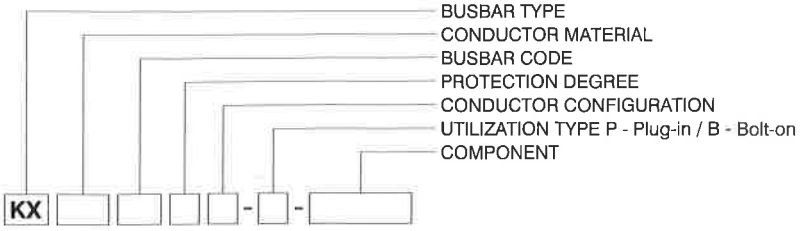

End Closer

Is used to close the end of busbar run.

Al Conductor		Cu Conductor		L1, L2, L3, N + Housing 04 L1, L2, L3, N, ½ PE + Housing 07 L1, L2, L3, N, PE + Housing 05	
Rated Current	Busbar Code	Rated Current	Busbar Code	Dimensions (mm)	Order No
630	06	800	08	6x40	**50907B**
800	08	1000	10	6x55	**50908B**
-	-	1250	12	6x70	**50909B**
1000	10	1350	14	6x80	**50910B**
1250	12	1600	16	6x110	**50911B**
1350	14	1600	16	6x125	**50912B**
-	-	2000	20	6x140	**50913B**
1600	17	2250	21	6x160	**50914B**
2000	20	2500	25	6x200	**50915B**
2500	27	-	-	6x250	**50919B**
-	-	2000	22	2(6x55)	**50916B**
2000	21	2500	26	2(6x80)	**50917B**
2500	25	3300	32	2(6x110)	**50918B**
-	-	3600	36	2(6x125)	**50920B**
3000	32	4000	40	2(6x140)	**50921B**
3200	33	4250	43	2(6x160)	**50922B**

End Closer - S

Sample Order:

2000 A, Aluminium, 2500 A, Copper
Bolt-on,IP 55, 4 /4½ / 5 conductors

KX 205A / 255C - B- S

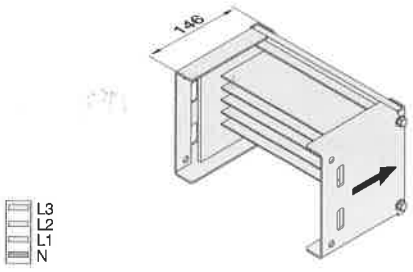

Note: S10 or S11 modules shall be used for Clean Earth and / or 200% N applications.

Al Conductor		Cu Conductor		L1, L2, L3, N + Housing 04 L1, L2, L3, N, ½ PE + Housing 07 L1, L2, L3, N, PE + Housing 05
Rated Current	Busbar Code	Rated Current	Busbar Code	Dimensions (mm)
4000	40	5000	50	2x(6x200)
5000	50	6300	63	3x(6x200)

End Closer - S 1 0

Sample Order:

6300 A, Copper
Bolt-on,IP 55, 4 conductors

KXC 63504 - B- S 10

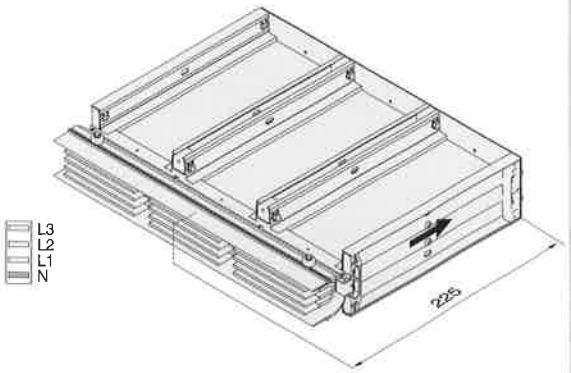

Al Conductor		Cu Conductor		L1, L2, L3, N + Housing 04 L1, L2, L3, N, ½ PE + Housing 07 L1, L2, L3, N, PE + Housing 05
Rated Current	Busbar Code	Rated Current	Busbar Code	Dimensions (mm)
4000	40	5000	50	2x(6x200)
5000	50	6300	63	3x(6x200)

End Closer - S 1 1

Sample Order:

5000 A, Aluminium,
Bolt-on,IP 55, 4 conductors

KXA 50504 - B - S 11

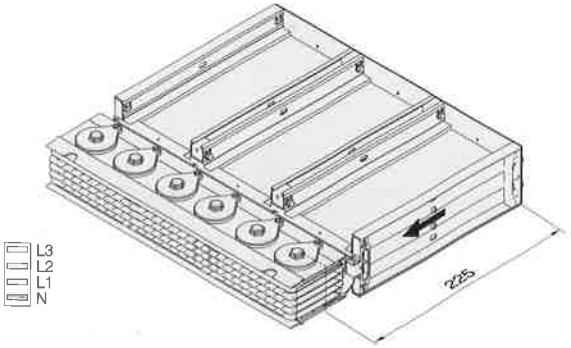

■ Please call us for non-standard components.

■ The dimensions given above are minumum values.

ELINEKX

▶▶ Panel Connections

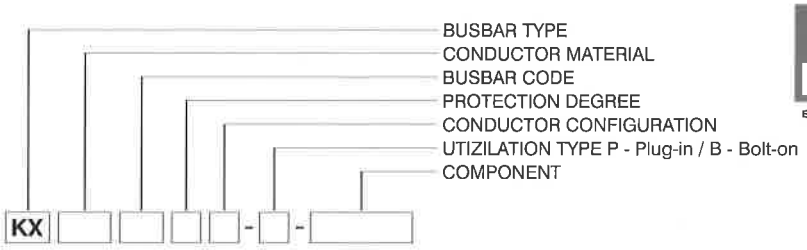

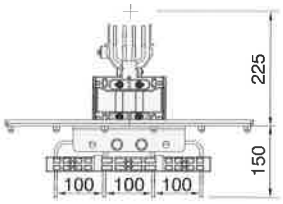

Panel Connection **- P 1 0**

Panel Feeder

Sample Order:

2500 A, Copper, Bolt-on,4 conductors for Panel Feeder

KXC 25504 - B - P10

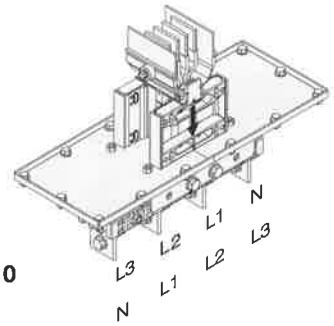

P10

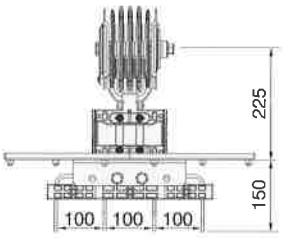

Panel Connection **- P 1 1**

Busbar Feeder

Sample Order:

2500 A, Copper, Bolt-on,4 conductors for Busbar Feeder

KXC 25504 - B -P11

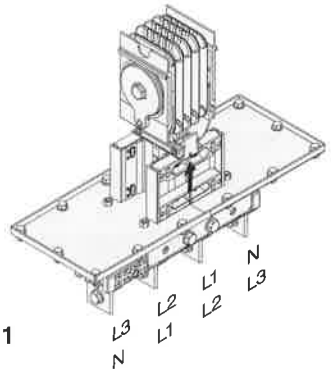

P11

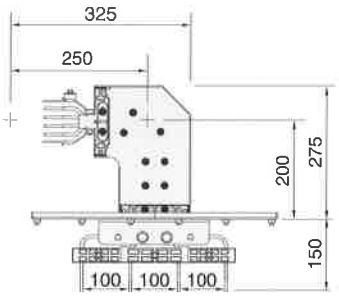

Upwards Panel Connection **- P U 2 0**

Panel Feeder

Sample Order:

3600 A, Copper, Bolt-on,4 conductors for Panel Feeder

KXC 36504 - B - PU20

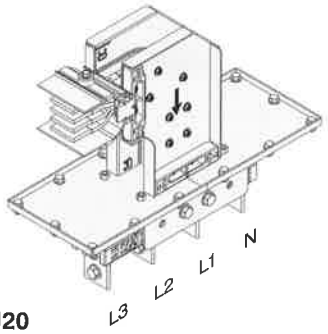

PU20

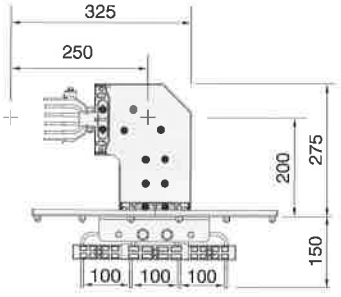

Downwards Panel Connection **- P D 2 0**

Panel Feeder

Sample Order:

4250 A, Copper, Bolt-on,4 conductors for Panel Feeder

KXC 43504 - B - PD20

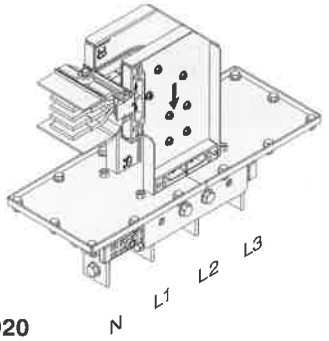

PD20

For connection dimensions please refer to tables on pages 23,24 and 25.

- Distance between conductors can vary in ±5 mm.
- Please call us for non-standard components.
- The dimensions given above are minumum values.

ELINEKX

▶▶ Busbar&Panel Connections

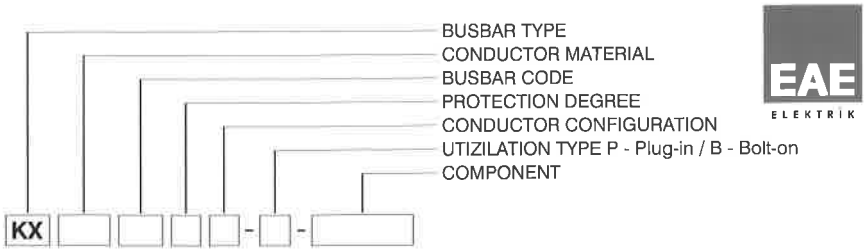

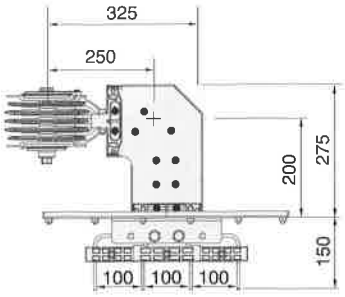

Upwards Busbar Connection **- P U 2 1**

Busbar Feeder

Sample Order:

3600 A, Copper, Bolt-on, 4 conductors for Busbar Feeder

KXC 36504 - B - PU21

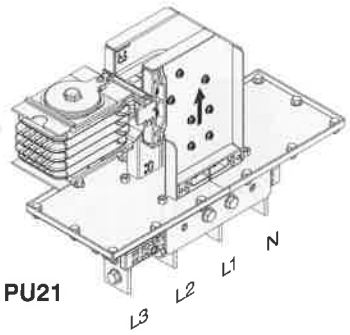

PU21

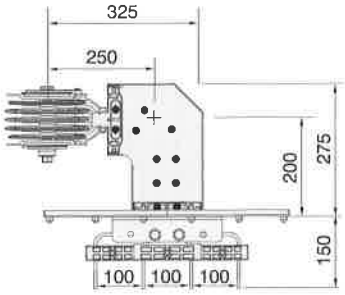

Downwards Busbar Connection **- P D 2 1**

Busbar Feeder

Sample Order:

4250 A, Copper, Bolt-on, 4 conductors for Busbar Feeder

KXC 43504 - B - PD21

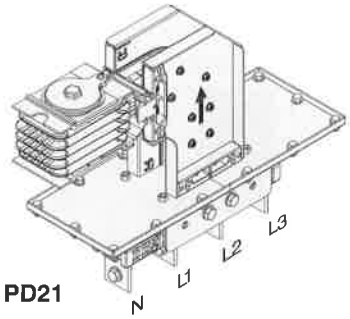

PD21

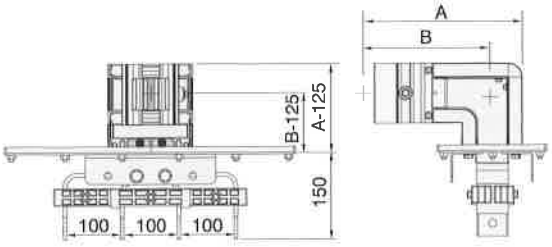

Right Panel Connection **- P R 3 0**

Panel Feeder

Sample Order:

2500 A, Copper, Bolt-on, 4 conductors for Panel Feeder

KXC 25504 - B - PR30

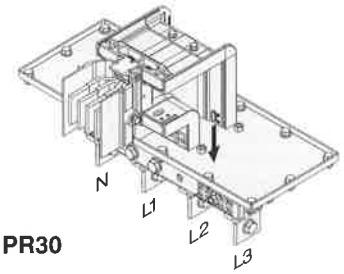

PR30

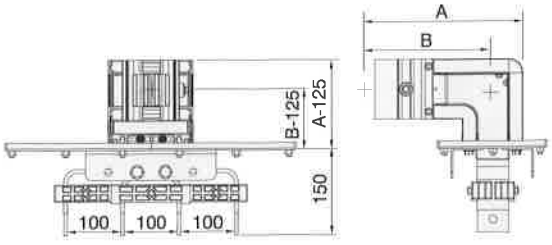

Left Panel Connection **- P L 3 0**

Panel Feeder

Sample Order:

2500 A, Copper, Bolt-on, 4 conductors for Panel Feeder

KXC 25504 - B - PL30

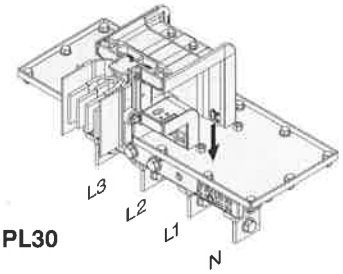

PL30

The "A" and "B" dimensions for PR30 and PL30 are the same dimensions as left and right elbows. Please refer to page 12 for the dimensions.

For connection dimensions please refer to tables on pages 23,24 and 25.

- Distance between conductors can vary in ±5 mm.
- Please call us for non-standard components.
- The dimensions given above are minumum values.

ELINEKX

▶▶ Panel Connections

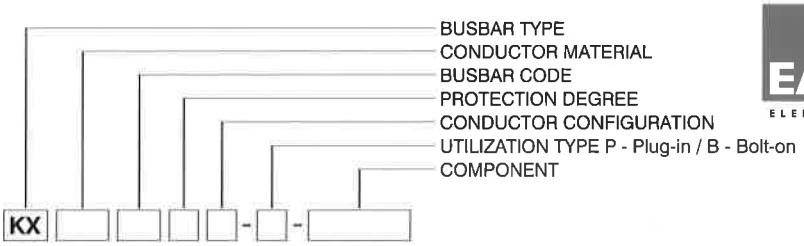

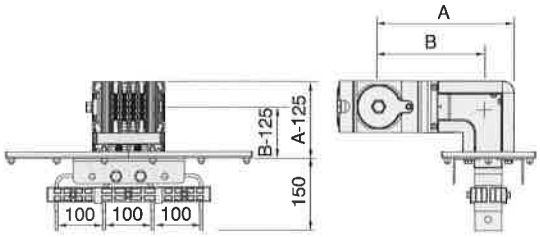

Right Panel Connection **- PR 31**

Busbar Feeder

Sample Order:

2500 A, Copper, Bolt-on, 4 conductors for Busbar Feeder

KXC 25504 - B - PR31

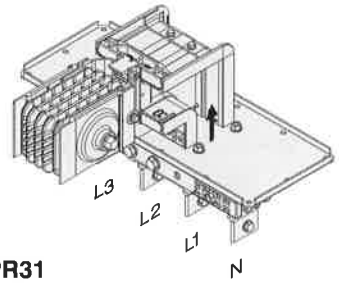

PR31

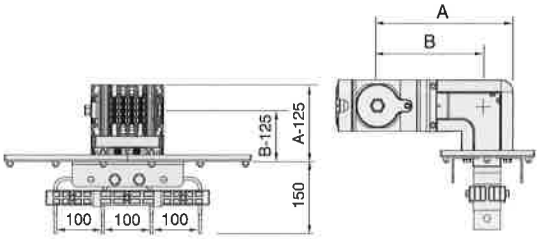

Left Panel Connection **- PL 31**

Busbar Feeder

Sample Order:

2500 A, Copper, Bolt-on, 4 conductors for Busbar Feeder

KXC 25504 - B - PL31

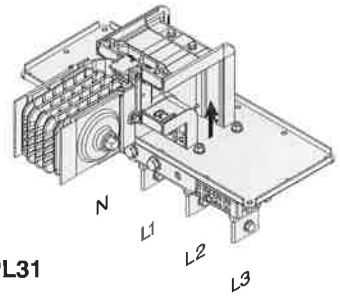

PL31

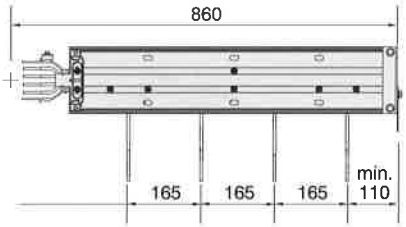

Panel Connection **- P 4 0**

Panel Feeder

Sample Order:

3300 A, Copper, Bolt-on, 4 conductors for Panel Feeder

KXC 32504 - B - P40

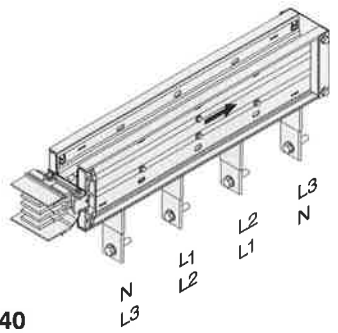

P40

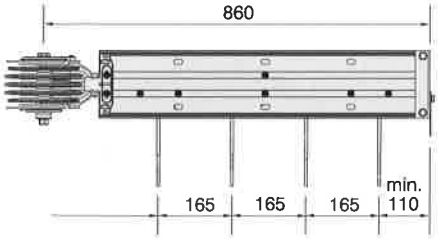

Panel Connection **- P 4 1**

Busbar Feeder

Sample Order:

3300 A, Copper, Bolt-on, 4 conductors for Busbar Feeder

KXC 32504 - B - P41

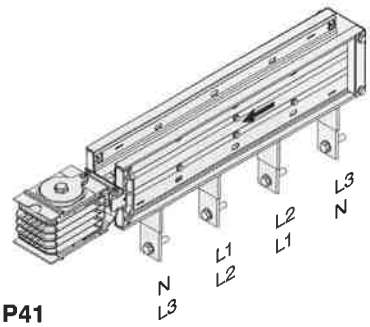

P41

The "A" and "B" dimensions for PR31 and PL31 are the same dimensions as left and right elbows. Please refer to page 12 for the dimensions.

For connection dimensions please refer to tables on pages 23,24 and 25.

- Distance between conductors can vary in ±5 mm.
- Please call us for non-standard components.
- The dimensions given above are minumum values.

Panel Connection Units

Panel Connection Units (P10,P11,PU20,PD20,PU21,PD21,PL30,PR30,PL31,PR31)

KXA 06
KXC 08

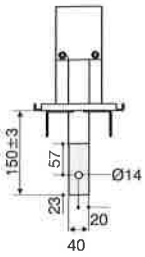

KXA 08
KXC 10

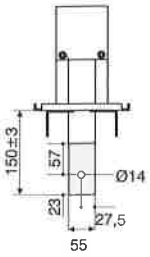

KXC 12

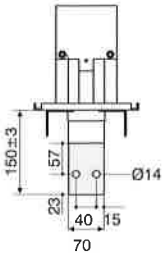

KXA 10
KXC 14

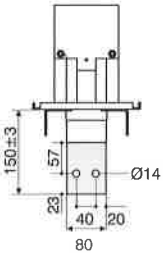

KXA 12
KXC 16

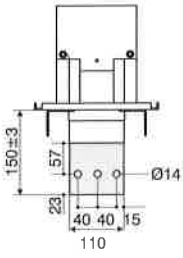

KXA 14

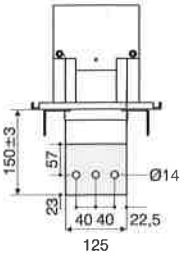

KXC 20

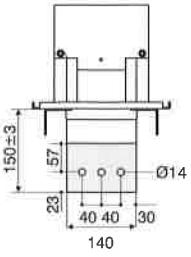

KXA 17
KXC 21

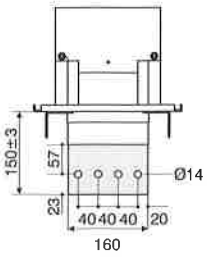

KXA 20
KXC 25

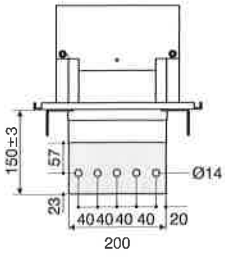

KXA 27

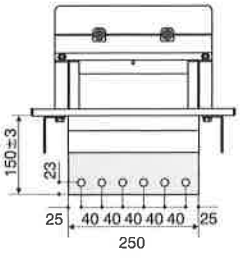

KXC 22

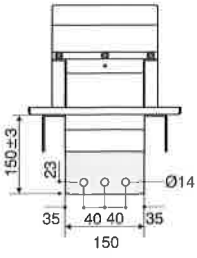

KXC 26

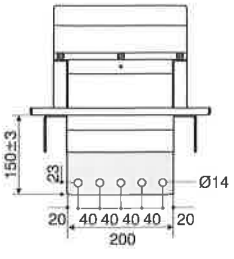

KXA 25
KXC 32

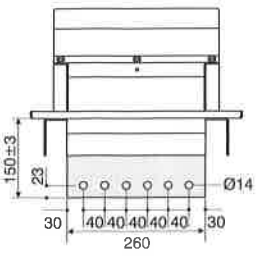

KXC 36

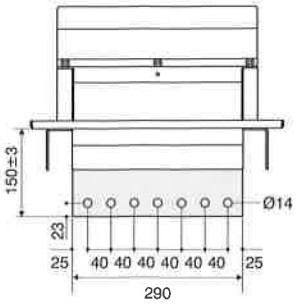

KXA 32
KXC 40

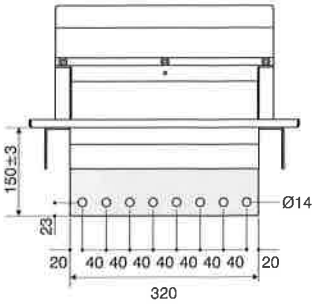

KXA 33
KXC 43

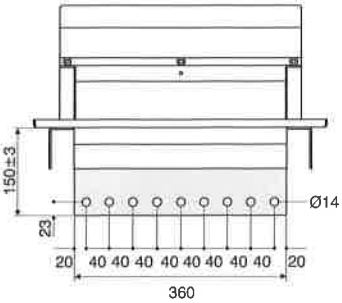

KXA 40
KXC 50

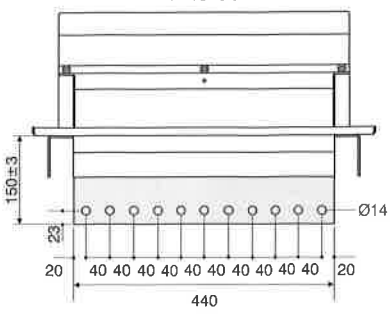

KXA 50
KXC 63

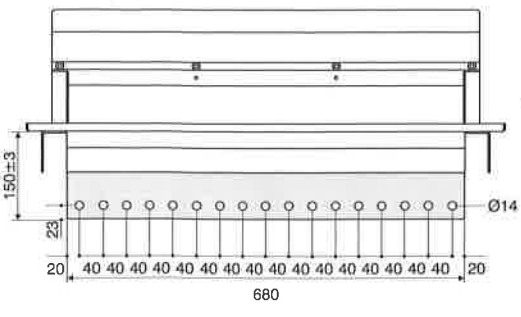

Sample Connection

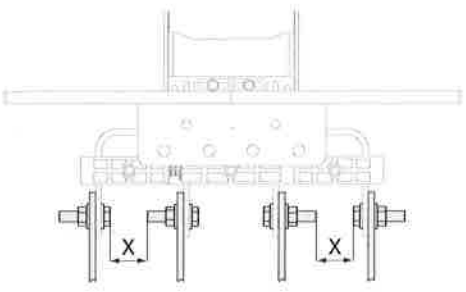

(Minimum X= 25 mm)

■ Please call us for non-standard components.

■ Distance between conductors can vary in ±5 mm.

■ The dimensions given above are minumum values.

ELINEKX

▶▶ Panel Connections

Panel Connection Units

Panel Connection Units (P40,P41)

KXA 06
KXC 08

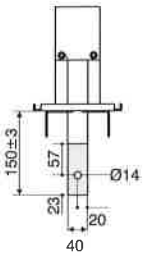

KXA 08
KXC 10

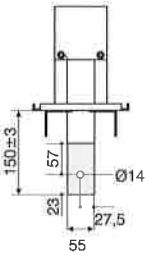

KXC 12

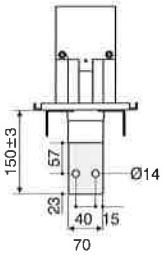

KXA 10
KXC 14

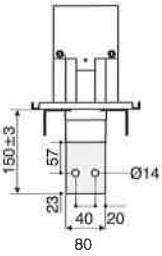

KXA 12
KXC 16

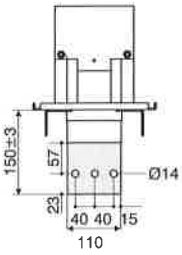

KXA 14

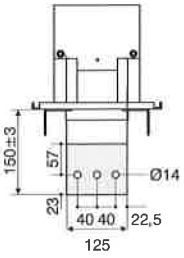

KXC 20

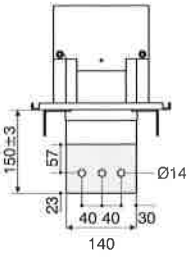

KXA 17
KXC 21

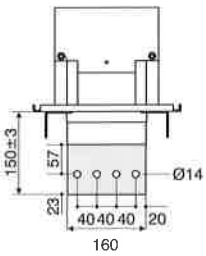

KXA 20
KXC 25

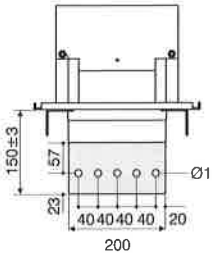

KXA 27

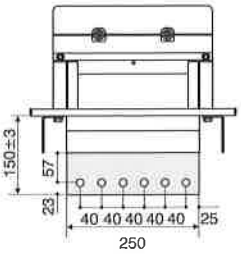

KXC 22

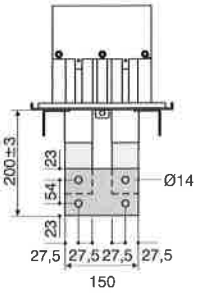

KXC 26

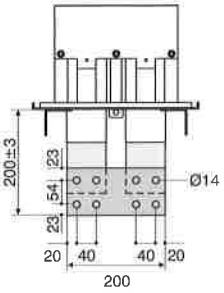

KXA 25
KXC 32

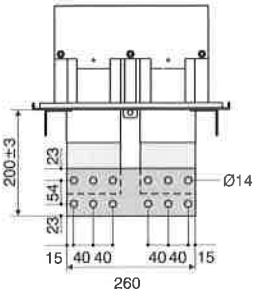

KXC 36

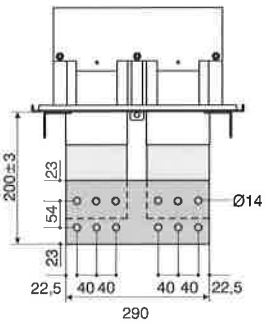

KXA 32
KXC 40

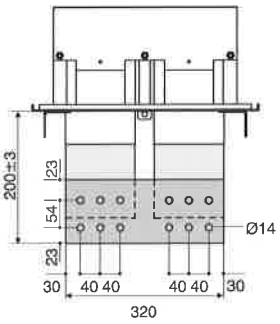

KXA 33
KXC 43

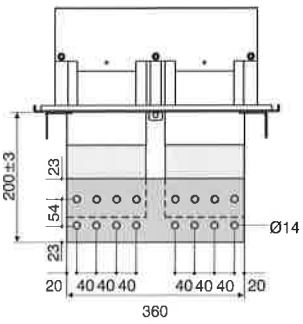

KXA 40
KXC 50

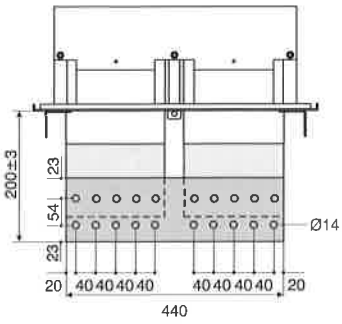

KXA 50
KXC 63

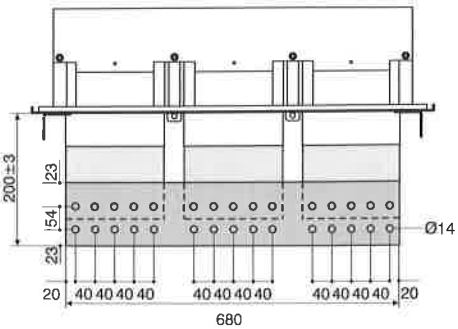

Sample Connection

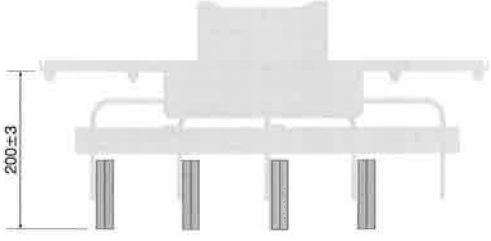

■ Please call us for non-standard components. ■ Distance between conductors can vary in ±5 mm. ■ The dimensions given above are minumum values.

ELINEKX

▶▶ Panel Connection Dimensions

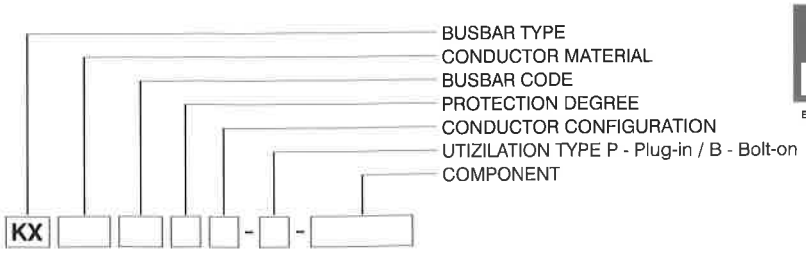

Flange Dimensions

Panel Connection Units are supplied with suitable flange as standard.

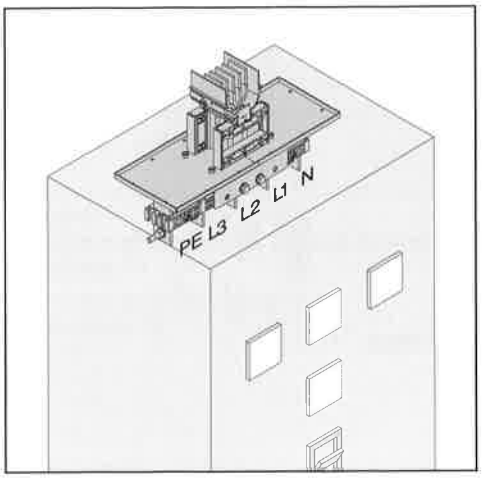

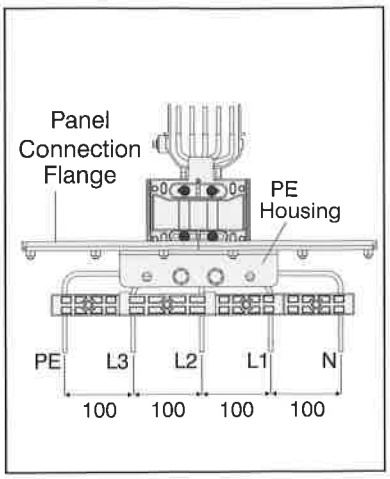

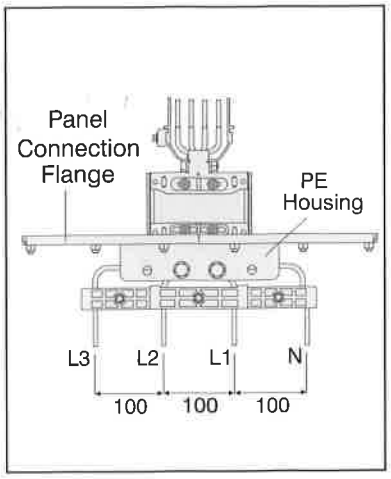

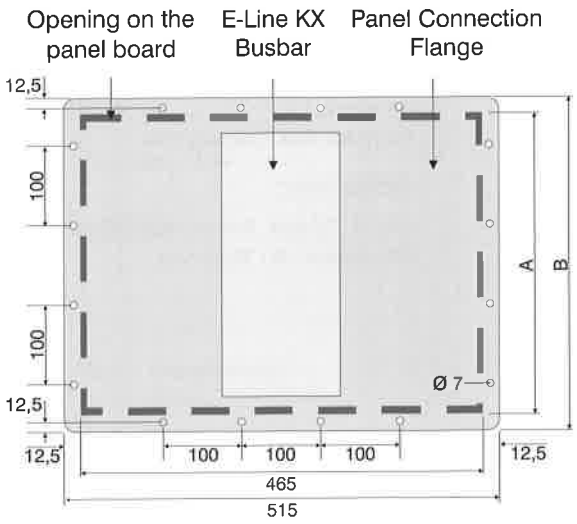

Aluminium (Al)		Copper (Cu)					
Rated Current	Busbar Code	Rated Current	Busbar Code	Conductor Size	A (mm)	B (mm)	Number of the holes along B length
630	06	800	08	6x40	135	180	2
800	08	1000	10	6x55	150	195	2
-	-	1250	12	6x70	165	210	2
1000	10	1350	14	6x80	175	220	2
1250	12	1600	16	6x110	205	250	3
1350	14	-	-	6x125	220	265	3
-	-	2000	20	6x140	235	280	3
1600	17	-	-	6x160	255	300	3
-	-	2250	21	6,1x160	255	300	3
2000	20	2500	25	6x200	295	340	4
2500	27	-	-	6x250	345	390	4
-	-	2000	22	2x(6x55)	245	290	3
-	-	2500	26	2x(6x80)	295	340	3
2500	25	3300	32	2x(6x110)	355	400	4
-	-	3600	36	2x(6x125)	385	430	4
3000	32	4000	40	2x(6x140)	415	460	5
3200	33	-	-	2x(6x160)	455	500	5
-	-	4250	43	2x(6,1x160)	455	500	5
4000	40	5000	50	2x(6x200)	535	580	6
5000	50	6300	63	3x(6x200)	775	820	8

ELINEKX

▶▶ Transformer Connections

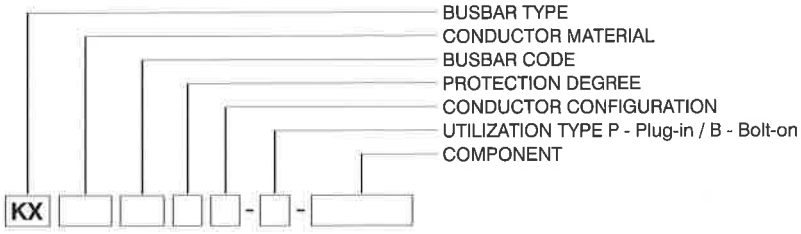

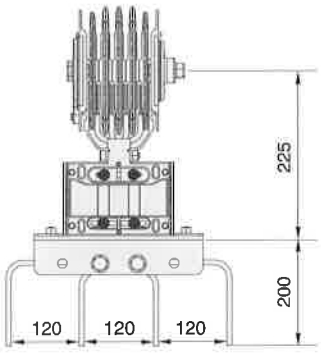

Transformer Connection - T R 1 1

Sample Order:

2500 A, Aluminium, Bolt-on, 4 conductors
KXA 25504 - B - TR11-120

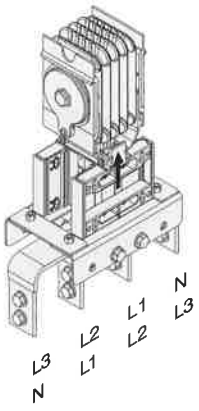

TR11

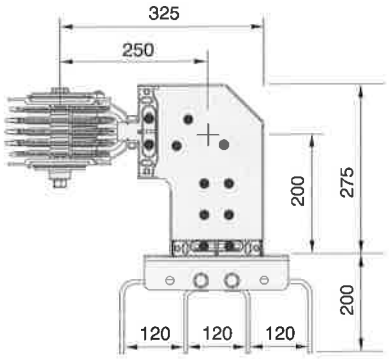

Upwards Transformer Connection - T U 2 1

Sample Order:

2500 A, Copper, Bolt-on, 4 conductors
KXC 25504 - B - TU21-120

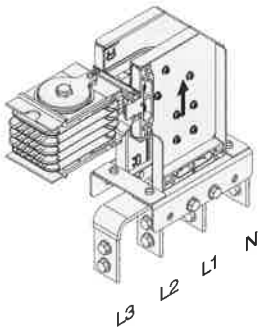

TU21

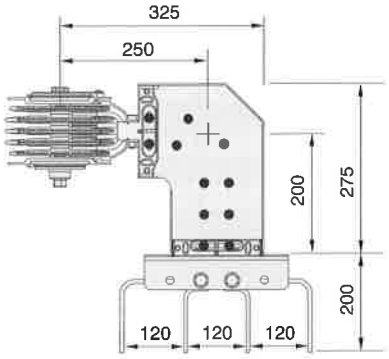

Downwards Transformer Connection - T D 2 1

Sample Order:

2500 A, Aluminium, Bolt-on, 4 conductors
KXA 25504 - B - TD21-120

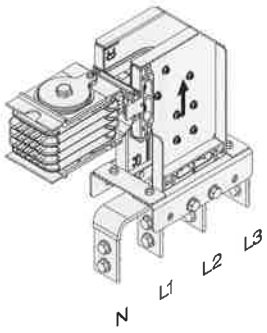

TD21

For connection dimensions please refer to tables on page 29.

- Distance between conductors can vary in ±5 mm.
- Please call us for non-standard components.
- The dimensions given above are minumum values.

ELINEKX

▶▶ Transformer Connections

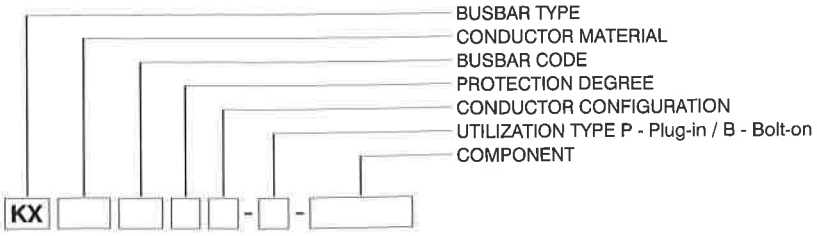

For transformer and panel connection applications EAE design and planning department can prepare your projects upon request.

For the design, the following information is required;

- Plan of transformer and panel board room, heights.
- Transformer dimensions, distance between bushings.

For connection dimensions please refer to tables on page 29.

Transformer Connection - T R 3 1

Sample Order:

2500 A, Copper, Bolt-on, 4 conductors

KXC 25504 - B - TR31

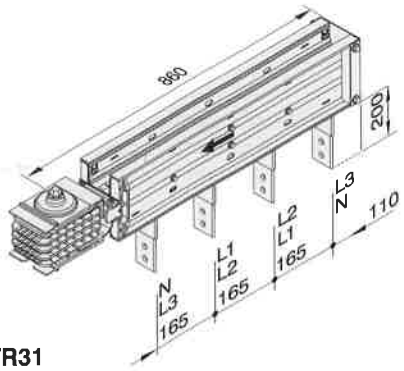

TR31

Flexible are used for

- Transformer - busbar,
- Panel - busbar connections.

- F □□

L (cm)

Sample Order:

800 A, Aluminium

KXA 0800 - F40

B=.....mm
X=.....mm
Y=.....mm
Z=.....mm
ø=.....mm

Flexibles

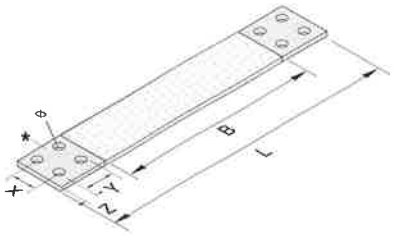

- This side is punched according to the needs of the custommer.

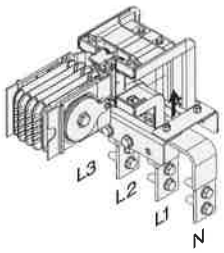

TR51

Right Transformer Connection - T R 5 1

Sample Order:

2500 A, Copper, Bolt-on, 4 conductors
KXC 25504 - B - TR51

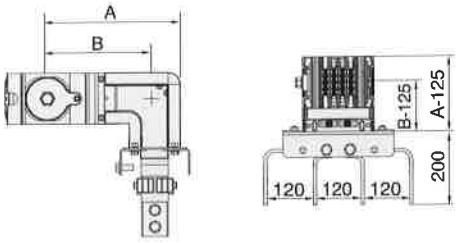

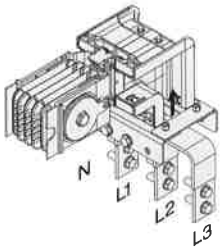

TL51

Left Transformer Connection - T L 5 1

Sample Order:

2500 A, Aluminium, Bolt-on, 4 conductors
KXA 25504 - B - TL51

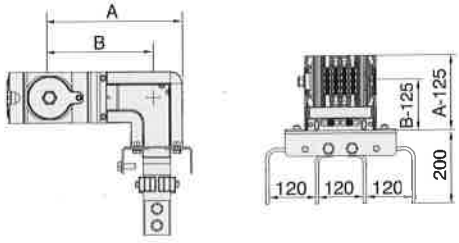

- Distance between conductors can vary in ±5 mm.
- Please call us for non-standard components.
- The dimensions given above are minumum values.

ELINEKX

▶▶ Transformer Connections

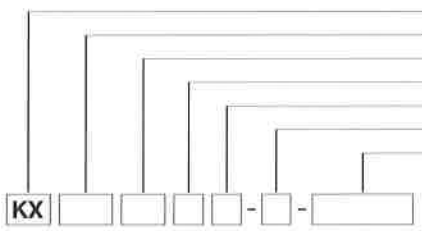

For transformer and panel connection applications EAE design and planning department can prepare your projects upon request.

For the design, the following information is required;

- Plan of transformer and panel board room, heights.
- Transformer dimensions, distance between bushings.

A and B dimensions of TR51 and TL51 are same as left and right elbows.
Please refer to page 12 for the dimensions.

For connection dimensions please refer to tables on page 29.

Transformer Connection - T R 4 1

Sample Order:

2500 A, Copper, Bolt-on, 4 conductors

KXC 25504 - B - TR41

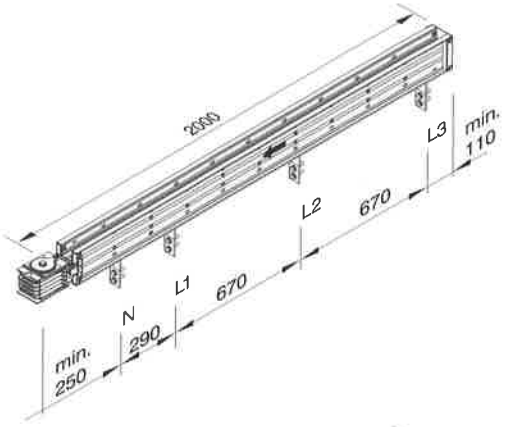

TR41

Transformer Connection - T R 6 1

Sample Order:

3600 A, Copper, Bolt-on, 4 conductors

KXC 36504 - B - TR61

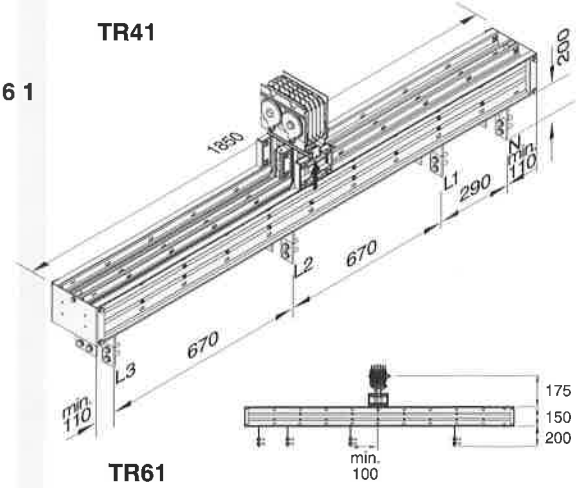

TR61

Transformer Connection - T R 7 1

Sample Order:

4000 A, Copper, Bolt-on, 4 conductors

KXC 40504 - B - TR71

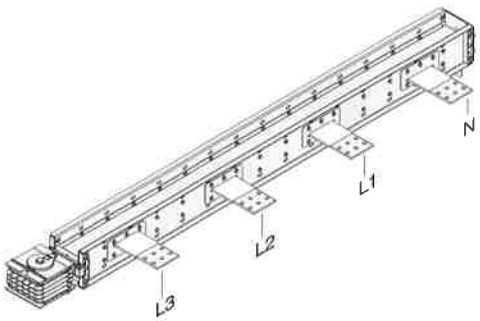

TR71

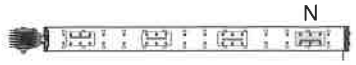

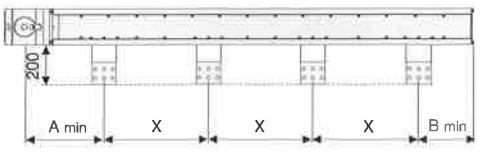

TR71 Dimension Table

KXA - Al Conductor		KXC - Cu Conductor		Conductor	A min	B min	X min
Rated Current	Busbar Code	Rated Current	Busbar Code		(mm)	(mm)	(mm)
630	06	800	08	6x40	270	130	100
800	08	1000	10	6x55	277,5	137,5	115
-	-	1250	12	6x70	285	145	130
1000	10	1350	14	6x80	290	150	140
1250	12	1600	16	6x110	305	165	170
1350	14	-	-	6x125	312,5	172,5	185
-	-	2000	20	6x140	320	180	200
1600	17	-	-	6x160	330	190	220
-	-	2250	21	6,1x160	330	190	220
2000	20	2500	25	6x200	350	210	260
2500	27	-		6x250	375	235	310
-	-	2000	22	2(6x55)	277,5	137,5	115
-	-	2500	26	2(6x80)	290	150	140
2500	25	3300	32	2(6x110)	305	165	170
-	-	3600	36	2(6x125)	312,5	172,5	185
3000	32	4000	40	2(6x140)	320	180	200
3200	33	-	-	2(6x160)	330	190	220
-	-	4250	43	2(6,1 x160)	330	190	220
4000	40	5000	50	2(6x200)	350	210	260

■ Distance between conductors can vary in ±5 mm.

■ Please call us for non-standard components.

■ The dimensions given above are minumum values.

Transformer Connection Units

Transformer Connection Units (TR11,TU21,TD21,TL31,TR31,TR41,TR51,TL51,TR61)

Note:
No flange supplied with transformer connection units.

KXA 06
KXC 08

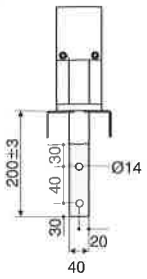

KXA 08
KXC 10

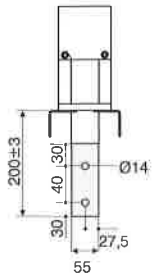

KXC 12

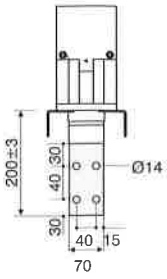

KXA 10
KXC 14

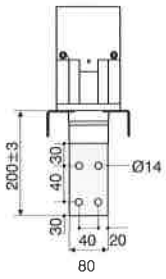

KXA 12
KXC 16

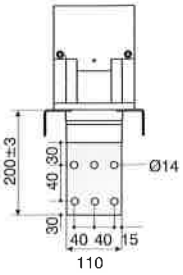

KXA 14

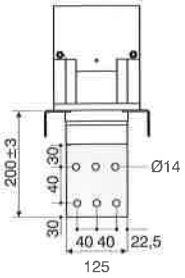

KXC 20

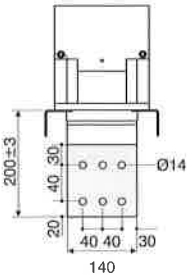

KXA 17
KXC 21

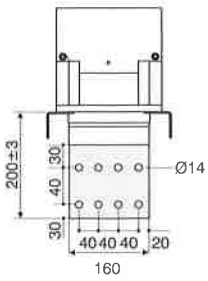

KXA 20
KXC 25

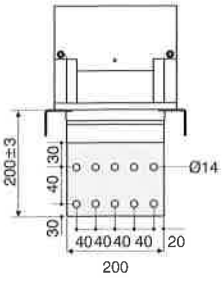

KXA 27

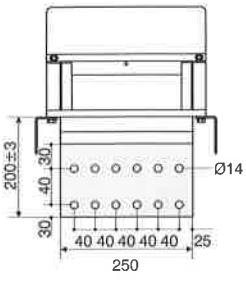

KXC 22

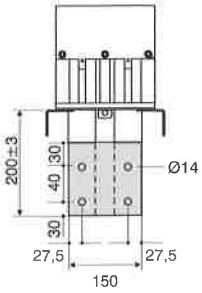

KXC 26

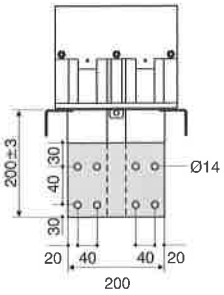

KXA 25
KXC 32

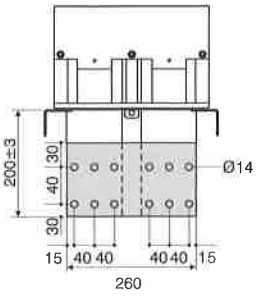

KXC 36

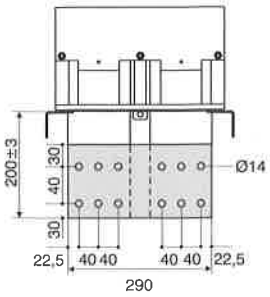

KXC 40

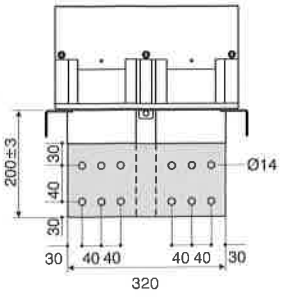

KXA 33
KXC 43

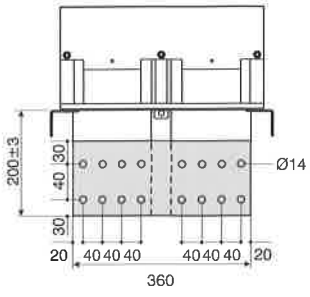

KXA 40
KXC 50

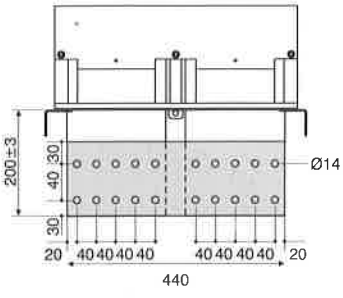

KXA 50
KXC 63

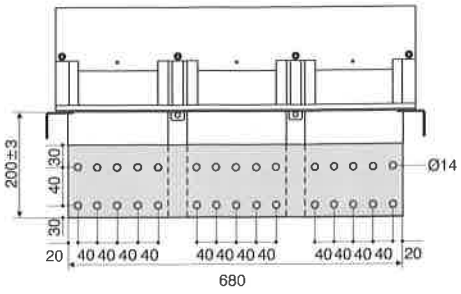

Sample Connection

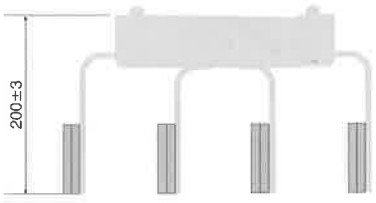

■ Please call us for non-standard components. ■ Distance between conductors can vary in ±5 mm. ■ The dimensions given above are minumum values.

Easy Installation System of Tap-off Boxes

The patented hinge system is designed to allow the installation of plug-in tap-off boxes simply and easily.

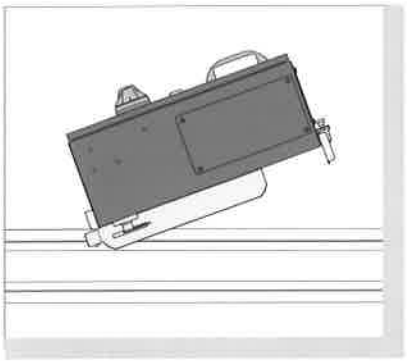

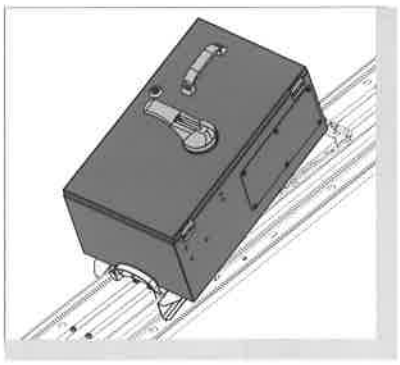

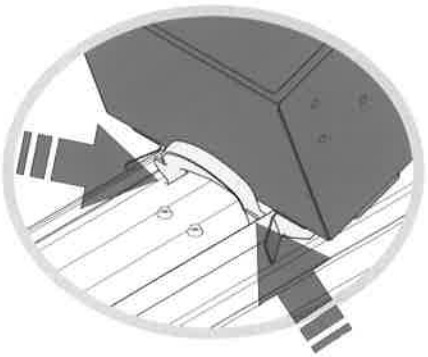

Fixing System of Tap-off Boxes to Busbars

Hook system, which is used for fixing of tap-off boxes on busbars.

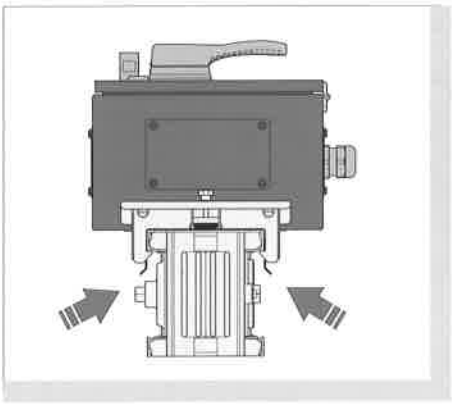

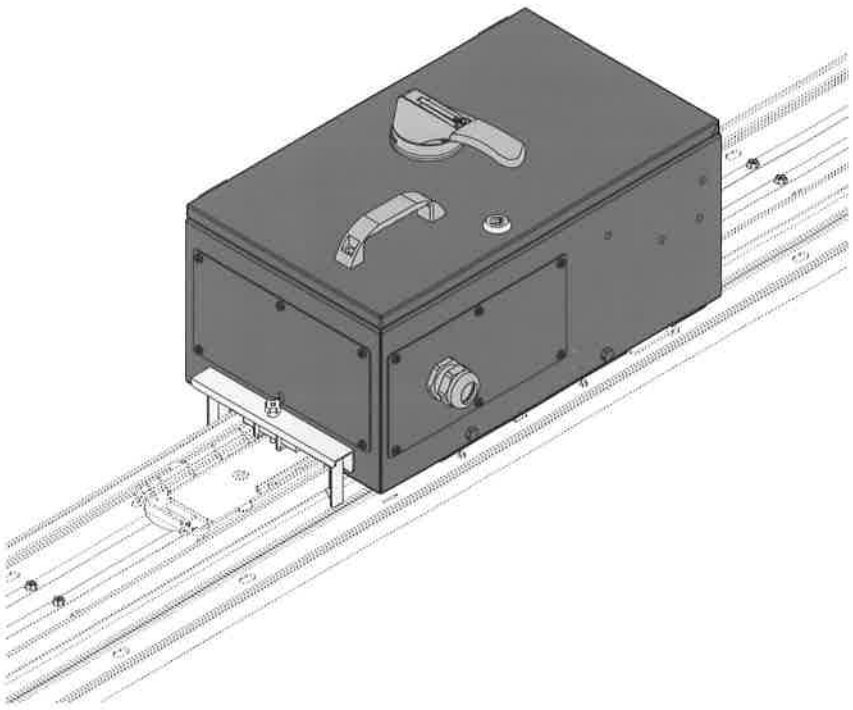

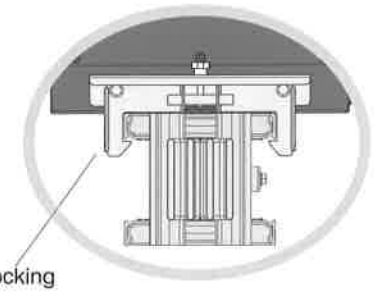

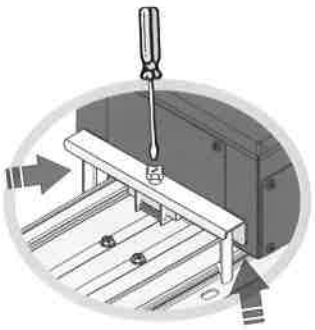

Universal Tap-off Boxes

Tap off boxes can be equipped with any brand of switches, circuit breakers and etc. Please inform EAE the type and brand of choosen MCCB, when ordering.

ELINEKX

▶▶Technical Features

Side Opening Box Lids

A new generation of tap-off box with side opening lids enables easier connection to protective devices and maintenance.

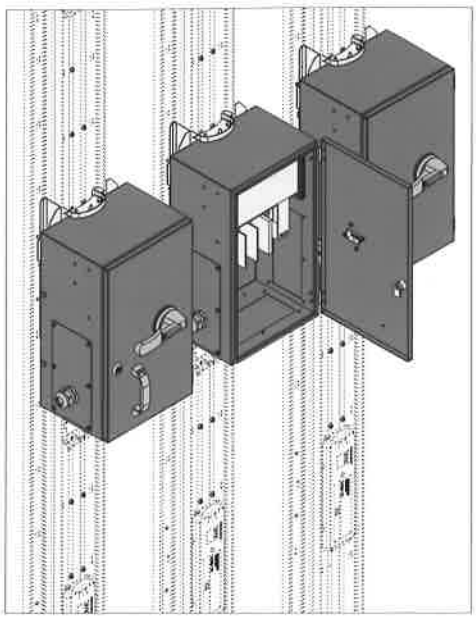

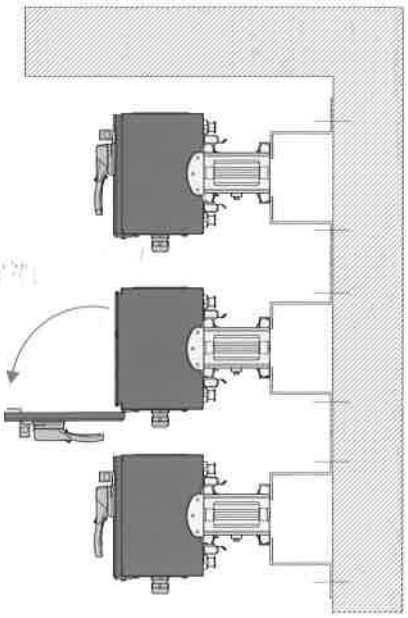

Bolt-on Tap-off Boxes

- Bolt-on tap-off boxes are designed to be installed at the joints without removing the joint block.
- The range of tap off boxes from 160A upto 1.000A.
- Busbar run must be de-energized before installing bolt-on tap-off boxes.

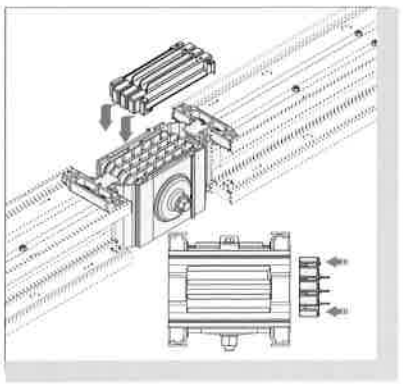

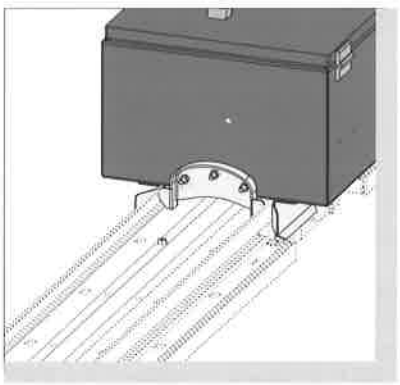

Effective Gasket

- Protection from dust and humidity due to effective gasket system.
- High IP Protection due to special forming.

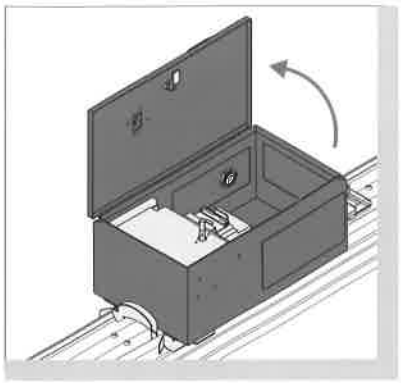

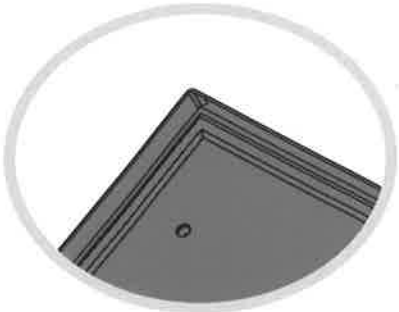

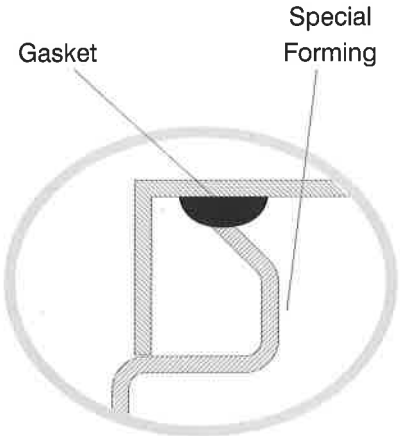

ELINEKX

▶▶ Tap-off Boxes with Fused Switches (Bolt-on-KXB)

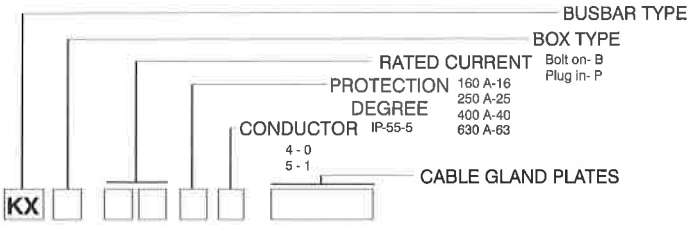

Cable Gland Plates

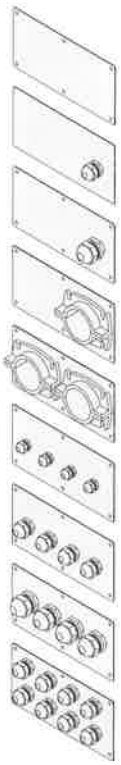

Mat.	Cable Gland Type	Order Code	Inner Diameter (mm)
Sheet	----	RP0	
Sheet	M32	RP1	25
Sheet	M40	RP2	32
Sheet	Special	RP3	63
AL	2xSpecial	RP4	63
AL	4xM25	RP5	18
AL	4xM32	RP6	25
AL	4xM40	RP7	32
AL	8xM32	RP8	25

Bolt-on Tap-off Boxes

KX B 1650
KX B 2550
KX B 4050
KX B 6350

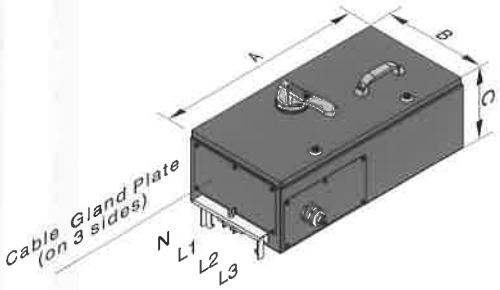

Sample Order:

Bolt-on / 630 A / IP-55 /
4 conductors

KXB 6350

KX B 1651
KX B 2551
KX B 4051
KX B 6351

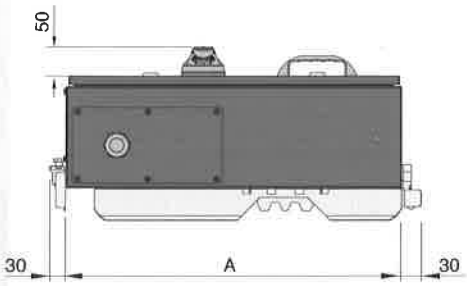

Sample Order:

Bolt-on / 630 A / IP-55 /
5 conductors

KXB 6351

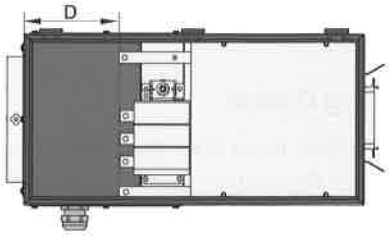

Notes:

EAE Bolt-on Tap Off Boxes are secured with an interlocking mechanism. This protects against attaching them to or removing them from the busbar in the "ON" position. When in the "OFF" position they are safe to attach to or remove from the busbar.

- Tap off boxes shall not be used empty. Fused switches,MCCBs or similar protection devices must be installed into tap-off boxes before they are installed to the busbar runs.

Tap-off Boxes	A (mm)	B (mm)	C (mm)	D (mm)	Fuse Size	Standard Gland
KXB 16	750	380	240	265	NH00	RP2
KXB 25	750	380	240	265	NH 1	RP3
KXB 40	850	420	260	265	NH 3	RP4
KXB 63	850	420	260	265	NH 3	RP4

Gland Type	Max. External Diameter of Cable Cros-section
M25	Ø 18
M32	Ø 26
M40	Ø 33
M50	Ø 39
M63	Ø 45
Special for EAE	Ø 60

Tap-off boxes can be equipped with any brand of switches, circuit breakers and etc.

Please call us for non-standard tap-off boxes and detailed information.

ELINEKX

Tap-off Boxes with Fused Switches (Plug-in-KXP)

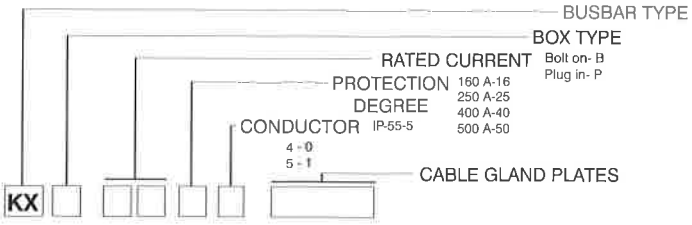

Cable Gland Plates

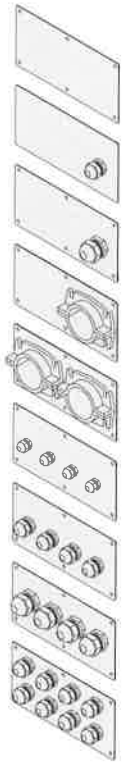

Mat.	Cable Gland Type	Order Code	Inner Diameter (mm)
Sheet	----	RP0	
Sheet	M32	RP1	25
Sheet	M40	RP2	32
Sheet	Special	RP3	63
AL	2xSpecial	RP4	63
AL	4xM25	RP5	18
AL	4xM32	RP6	25
AL	4xM40	RP7	32
AL	8xM32	RP8	25

Plug-in Tap-off Boxes

KX P 1650
KX P 2550
KX P 4050
KX P 5050

Sample Order:

Plug-in / 400 A / IP-55 / 4 conductors

KXP 4050

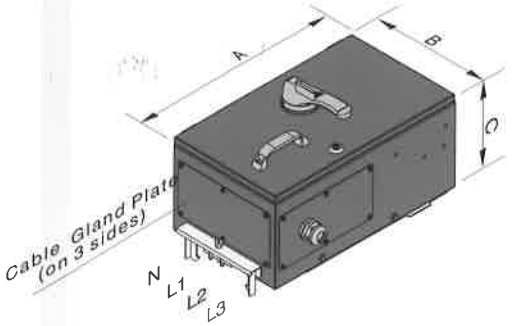

KX P 1651
KX P 2551
KX P 4051
KX P 5051

Sample Order:

Plug-in / 500 A / IP-55 / 5 conductors

KXP 5051

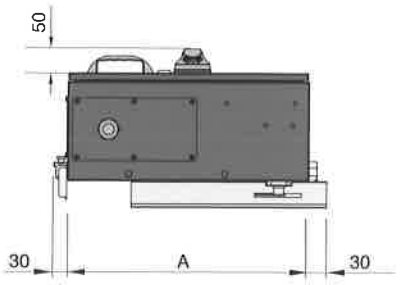

Notes:

EAE Plug-in Tap Off Boxes are secured with an interlocking mechanism. This protects against attaching them to or removing them from the busbar in the "ON" position. When in the "OFF" position they are safe to attach to or remove from the busbar.

- Tap off boxes shall not be used empty. Fused switches,MCCBs or similar protection devices must be installed into tap-off boxes before they are installed to the busbar runs.

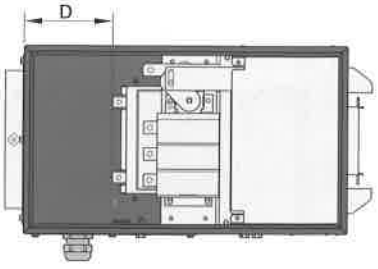

Tap-off Boxes	A (mm)	B (mm)	C (mm)	D (mm)	Fuse Size	Standard Gland
KXP 16	520	300	210	250	NH00	RP2
KXP 25	670	380	270	310	NH 1	RP3
KXP 40	750	420	300	285	NH 3	RP4
KXP 50	750	420	300	285	NH 3	RP4

Gland Type	Max. External Diameter of Cable Cros-section
M25	Ø 18
M32	Ø 26
M40	Ø 33
M50	Ø 39
M63	Ø 45
Special for EAE	Ø 60

Tap-off boxes can be equipped with any brand of switches, circuit breakers and etc.

Please call us for non-standard tap-off boxes and detailed information.

ELINEKX

▶▶ Tap-off Boxes for MCCB's (KXB)

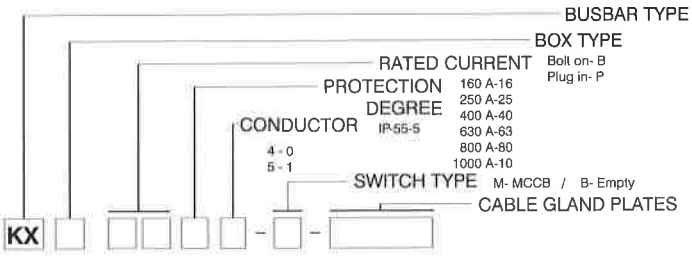

Cable Gland Plates

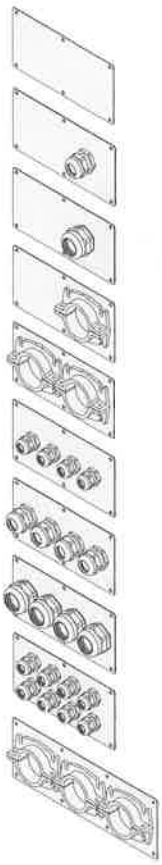

Mat.	Cable Gland Type	Order Code	Inner Diameter (mm)
Sheet	----	RP0	
Sheet	M32	RP1	25
Sheet	M40	RP2	32
Sheet	Special	RP3	63
AL	2xSpecial	RP4	63
AL	4xM25	RP5	18
AL	4xM32	RP6	25
AL	4xM40	RP7	32
AL	8xM32	RP8	25
AL	3xSpecial	RP9	63

Special Cable Gland Plates



Mat.	Cable Gland Type	Order Code	Inner Diameter (mm)
Sheet	----	RPK0	----
Sheet	M25	RPK1	18
Sheet	M32	RPK2	25
Sheet	M40	RPK3	32
Sheet	1xSpecial	RPK4	63

Tap-off Boxes	A (mm)	B (mm)	C (mm)	*D (mm)	Standard Gland
KXB 16	650	300	220	130	RPK3
KXB 25	650	300	220	130	RPK4
KXB 40	800	300	220	210	RP4
KXB 63	800	300	220	210	RP4
KXB 80	1100	450	275	385	RP9
KXB 10	1100	450	275	385	RP9

* D value varies as per the used switch.

*** Tap-off boxes can be equipped with any brand of MCCB's.**

Please call us for non-standard tap-off boxes.

Bolt-on Tap-off Boxes

KX B 1650-B
KX B 2550-B
KX B 4050-B
KX B 6350-B

KX B 1650-M
KX B 2550-M
KX B 4050-M
KX B 6350-M

Sample Order:

Bolt-on / 630 A / IP-55 /
4 conductors, empty tap-off box

KXB 6350 - B1

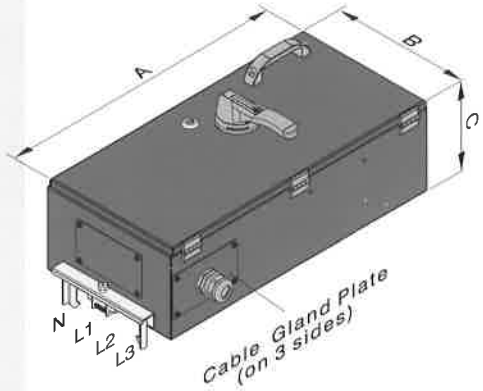

KX B 1651-B
KX B 2551-B
KX B 4051-B
KX B 6351-B

KX B 1651-M
KX B 2551-M
KX B 4051-M
KX B 6351-M

Sample Order:

Bolt-on / 630 A / IP-55 /
5 conductors, empty tap-off box

KXB 6351 - B1

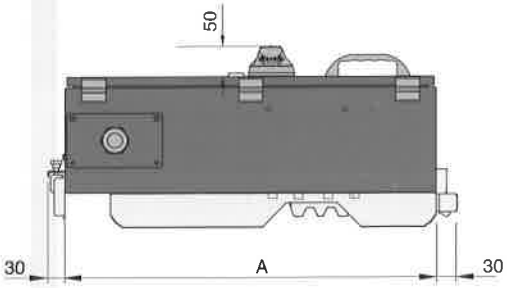

KX B 8050-B1
KX B 1050-B1

KX B 8050-M1
KX B 1050-M1

Sample Order:

Bolt-on / 800 A / IP-55 /
4 conductors, empty tap-off box

KXB 8050 - B1

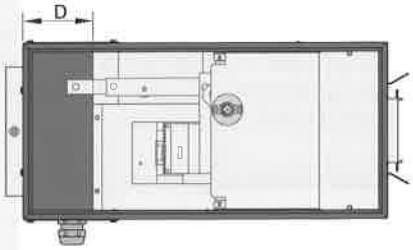

KX B 8051-B
KX B 1051-B

KX B 8051-M
KX B 1051-M

Sample Order:

Bolt-on / 800 A / IP-55 /
5 conductors, empty tap-off box

KXB 8051 - B1

Gland Type	Max. External Diameter of Cable Cros-section
M25	Ø 18
M32	Ø 26
M40	Ø 33
M50	Ø 39
M63	Ø 45
Special for EAE	Ø 60

ELINEKX

▶▶ Tap-off Boxes for MCCB's (KXP)

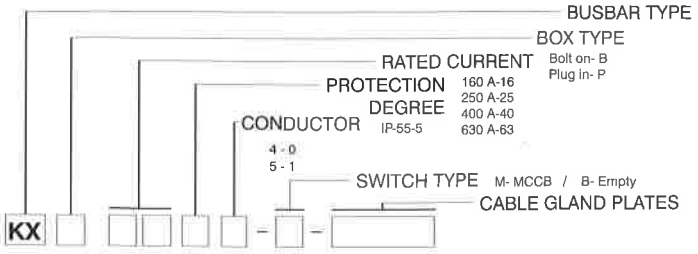

Cable Gland Plates

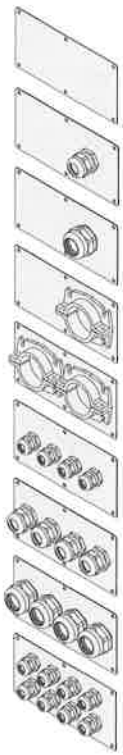

Mat.	Cable Gland Type	Order Code	Inner Diameter (mm)
Sheet	----	RP0	
Sheet	M32	RP1	25
Sheet	M40	RP2	32
Sheet	Special	RP3	63
AL	2xSpecial	RP4	63
AL	4xM25	RP5	18
AL	4xM32	RP6	25
AL	4xM40	RP7	32
AL	8xM32	RP8	25

Special Cable Gland Plates



Mat.	Cable Gland Type	Order Code	Inner Diameter (mm)
Sheet	----	RPK0	----
Sheet	M25	RPK1	18
Sheet	M32	RPK2	25
Sheet	M40	RPK3	32
Sheet	1xSpecial	RPK4	63

Plug-in Tap-off Boxes

KX P 1 6 5 0 - B1
KX P 2 5 5 0 - B1
KX P 4 0 5 0 - B1
KX P 6 3 5 0 - B1

KX P 1 6 5 0 - M1
KX P 2 5 5 0 - M1
KX P 4 0 5 0 - M1
KX P 6 3 5 0 - M1

Sample Order:

Plug-in / 400 A / IP-55 /
4 conductors, empty tap-off box

KXP 4050 - B1

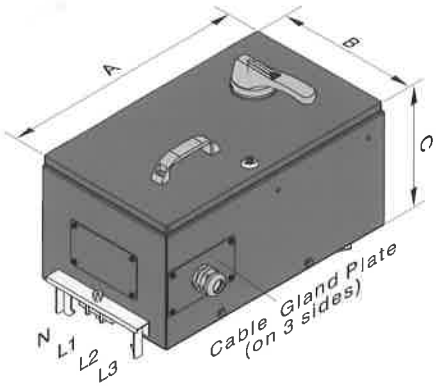

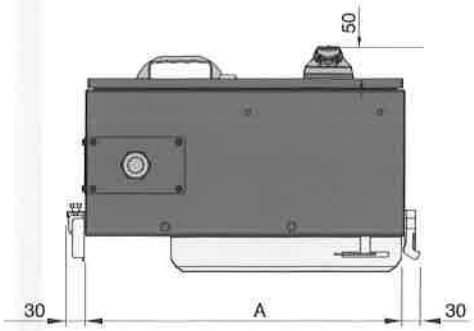

KX P 1 6 5 1 - B1
KX P 2 5 5 1 - B1
KX P 4 0 5 1 - B1
KX P 6 3 5 1 - B1

KX P 1 6 5 1 - M1
KX P 2 5 5 1 - M1
KX P 4 0 5 1 - M1
KX P 6 3 5 1 - M1

Sample Order:

Plug-in / 400 A / IP-55 /
5 conductors, empty tap-off box

KXP 4051 - B1

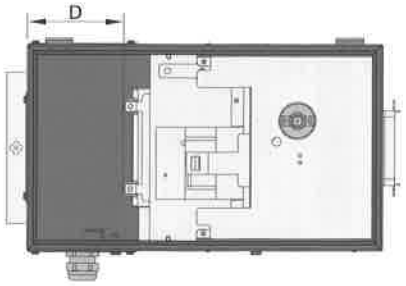

Tap-off Boxes	A (mm)	B (mm)	C (mm)	*D (mm)	Standard Gland
KXP 16	520	300	250	150	RPK3
KXP 25	520	300	250	150	RPK4
KXP 40	700	300	250	255	RP4
KXP 63	700	300	250	255	RP4

* D value varies as per the used switch.

*** Tap-off boxes can be equipped with any brand of MCCB's.**

Please call us for non-standard tap-off boxes.

Gland Type	Max. External Diameter of Cable Cros-section
M25	Ø 18
M32	Ø 26
M40	Ø 33
M50	Ø 39
M63	Ø 45
Special for EAE	Ø 60

ELINEKX

▶▶ Vertical and Horizontal Busbar Applications

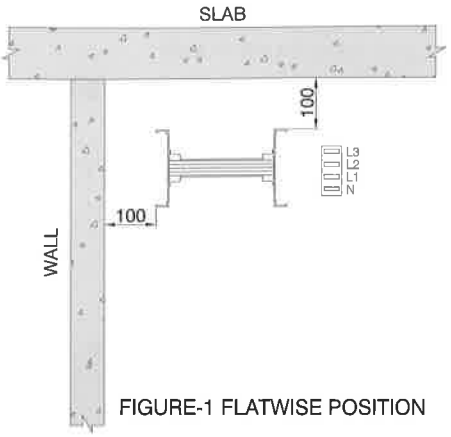

FIGURE-1 FLATWISE POSITION

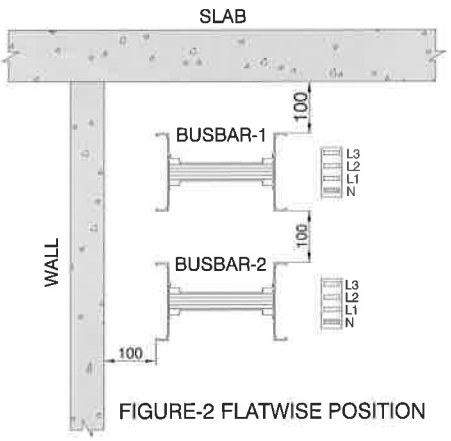

FIGURE-2 FLATWISE POSITION

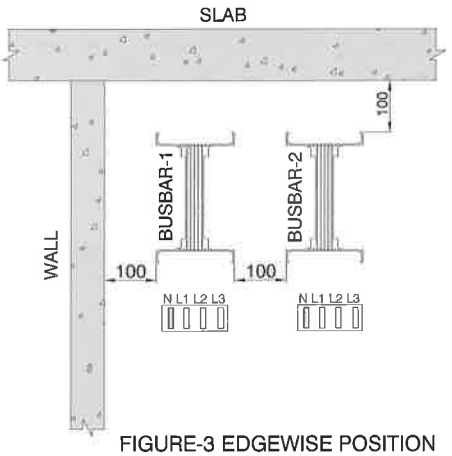

FIGURE-3 EDGEWISE POSITION

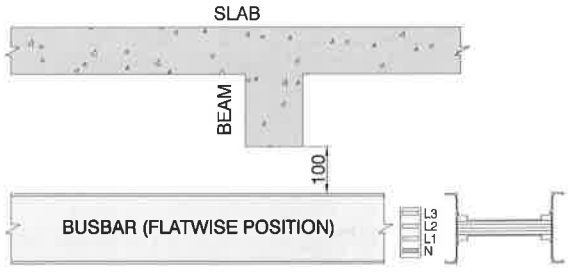

FIGURE-4 CROSSING UNDER A BEAM HORIZONTAL POSITION

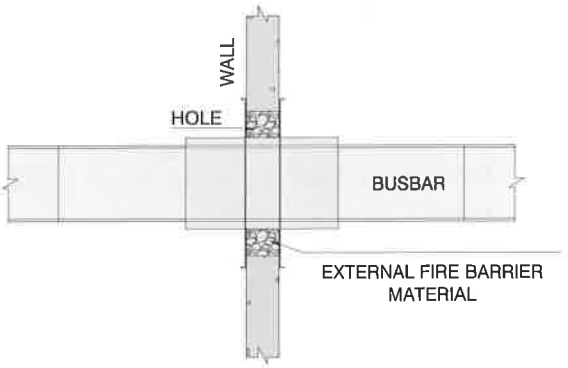

FIGURE-5 SAMPLE WALL CROSSING WITH FIRE BARRIER

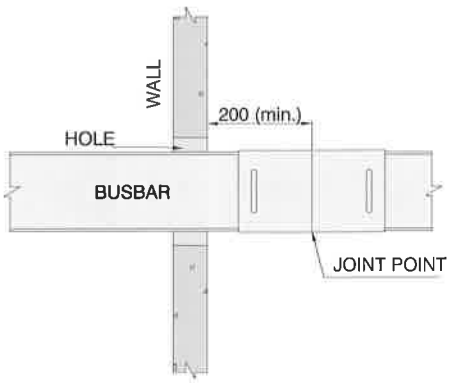

FIGURE-6 STANDARD WALL CROSSING

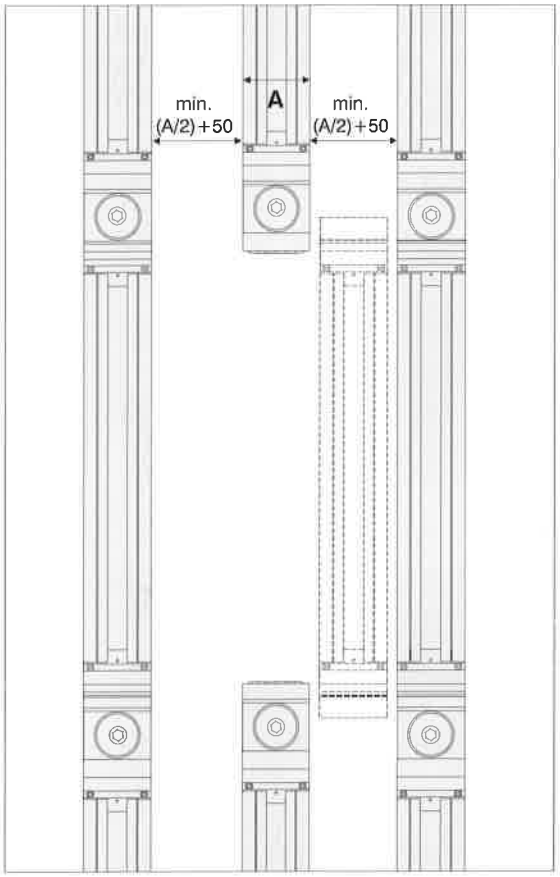

MINIMUM DISTANCE BETWEEN BUSBAR RUNS IN HORIZONTAL APPLICATIONS.

The dimensions given above are minumum values.

All measures are given in mm.

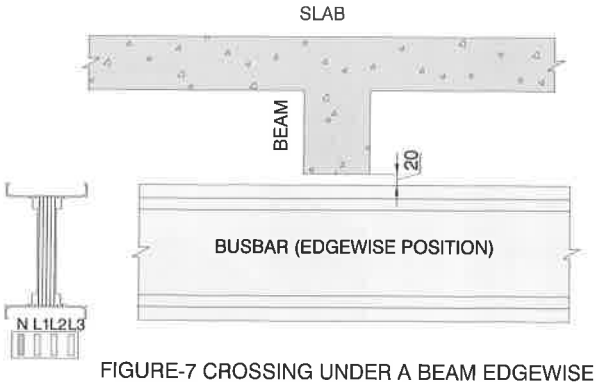

FIGURE-7 CROSSING UNDER A BEAM EDGEWISE POSITION

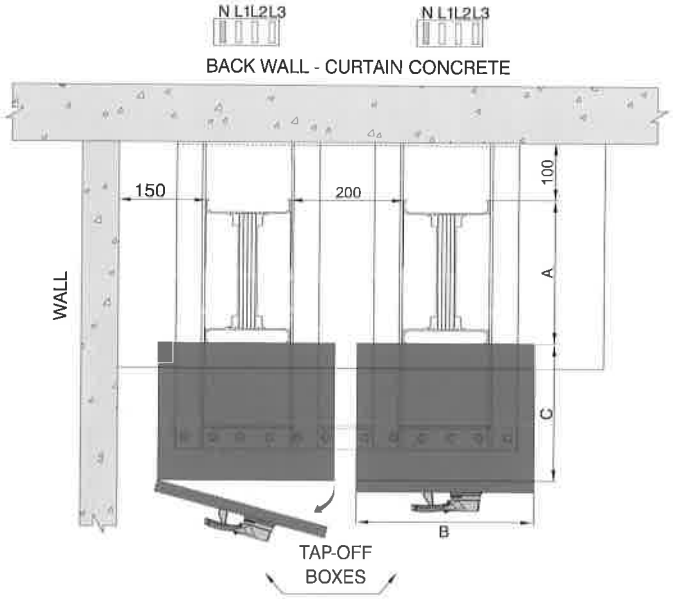

FIGURE-8 MINIMUM DIMENSIONS BETWEEN 2 TAP-OFF BOXES

Table For Outer Dimension of Busbars

KXA - Al Conductor		KXC - Cu Conductor		A
Rated Current	Busbar Code	Rated Current	Busbar Code	(mm)
630	06	800	08	91
800	08	1000	10	106
-	-	1250	12	121
1000	10	1350	14	131
1250	12	1600	16	161
1350	14	-	-	176
-	-	2000	20	191
1600	17	-	-	211
-	-	2250	21	211
2000	20	2500	25	251
2500	27	-	-	301
-	-	2000	22	202
-	-	2500	26	252
2500	25	3300	32	312
-	-	3600	36	342
3000	32	4000	40	372
3200	33	-	-	412
-	-	4250	43	412
4000	40	5000	50	492
5000	50	6300	63	732

NOTE: In order to accomodate the busbar systems in the riser shaft;

MDM= Minimum Distance from the wall

"A" dimension = All dimensions are for standard modules .

"C" dimension = Please see page 32-35 and special dimension for Tap-off box "C" dimension

"B" dimension = Max. opening distance for Tap-off box cover.

Shaft Dimension = MDM + A + C + B + 100mm

Shown as (Figure-8)

- The dimensions given above are minumum values.
- All measures are given in mm.

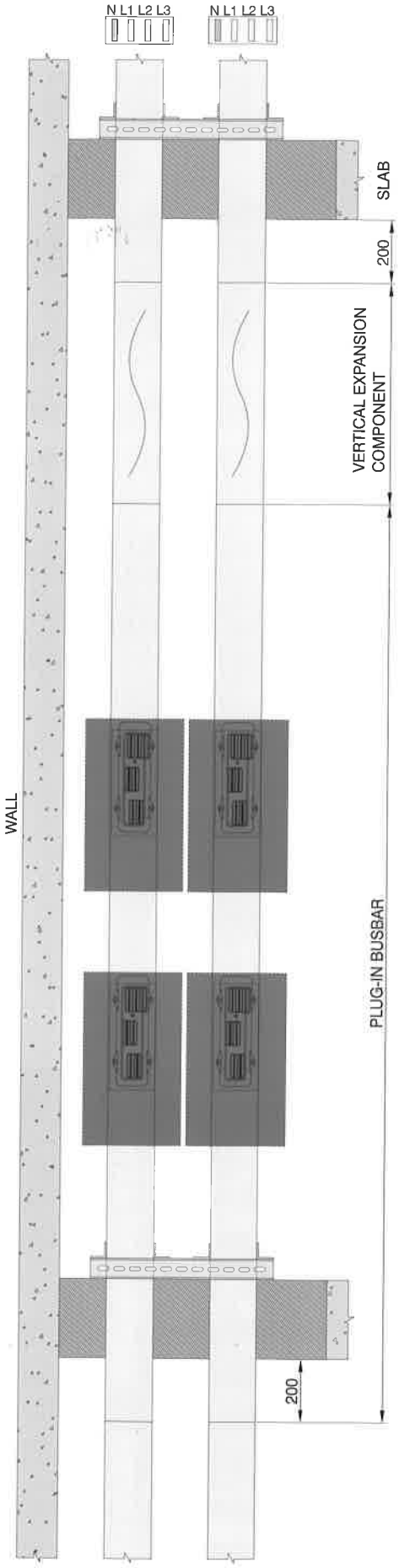

FIGURE-9 MINIMUM DIMENSIONS BETWEEN 2 RISERS

ELINEKX

▶▶ Feeder Boxes (B10,B11)

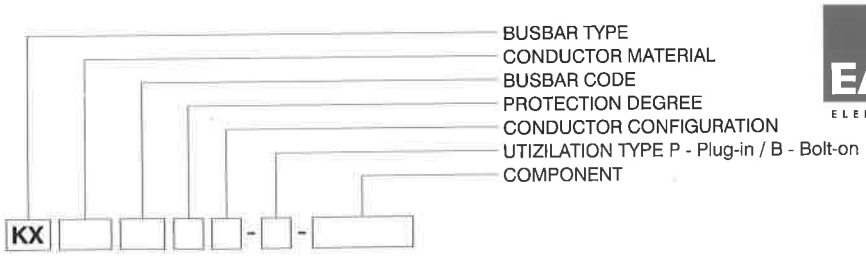

Cable Gland Plates

Busbar Housing Type	Cable Gland Plate	Type
		1
	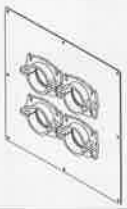	2
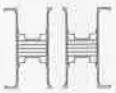	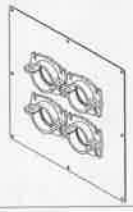	2
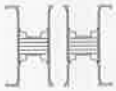	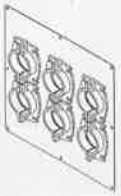	3
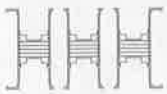	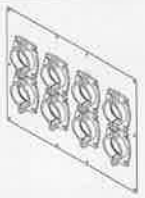	4

Feeder Box B10 - B 1 0

Sample Order:

3200 A, Aluminium, Bolt-on
4conductors

KXA 32504 - B - B10

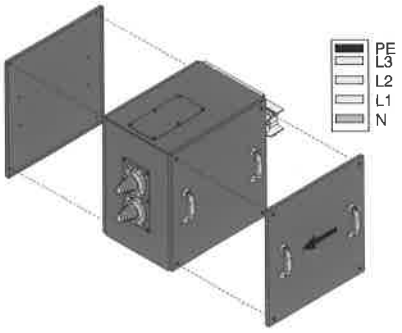

B10

Feeder Box B11 - B 1 1

Sample Order:

3600 A, Copper, Bolt-on, 4 conductors

KXC 36504 - B - B11

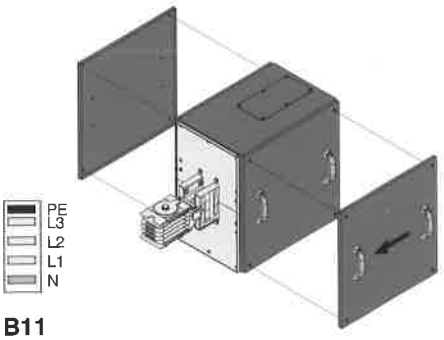

B11

Ampere Ratings

KXA - Al Conductor		KXC - Cu Conductor		A	B	C	D	Gland Type
Rated Current	Busbar Code	Rated Current	Busbar Code	(mm)	(mm)	(mm)	(mm)	
630	06	800	08	500	520	355	350	1
800	08	1000	10	500	520	355	350	1
-	-	1250	12	500	520	355	350	1
1000	10	1350	14	500	520	355	350	1
1250	12	1600	16	500	520	355	350	1
1350	14	-	-	500	520	555	350	2
-	-	2000	20	500	520	555	350	2
1600	17	-	-	500	520	555	350	2
-	-	2250	21	500	520	555	350	2
2000	20	2500	25	500	520	555	350	2
2500	27	-	-	500	520	555	350	3
-	-	2000	22	500	520	555	350	2
-	-	2500	26	500	520	555	350	2
2500	25	3300	32	500	520	555	350	3
-	-	3600	36	500	520	555	350	3
3000	32	4000	40	700	520	770	550	3
3200	33	-	-	700	520	770	550	3
-	-	4250	43	700	520	770	550	3
4000	40	5000	50	700	520	770	550	3
5000	50	6300	63	700	520	950	550	4

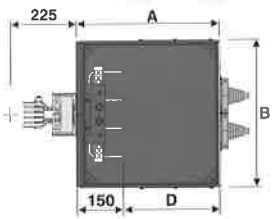

One way, 4 conductors

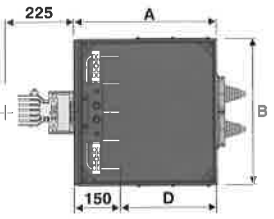

One way, 5 conductors

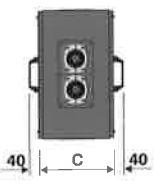

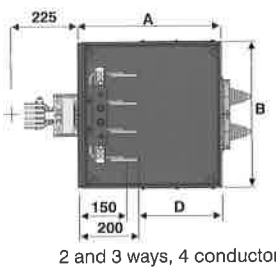

2 and 3 ways, 4 conductors

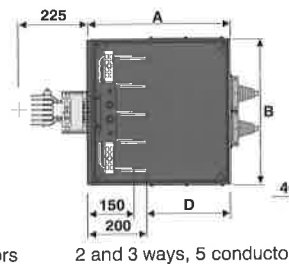

2 and 3 ways, 5 conductors

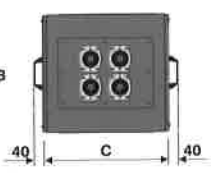

■ The dimensions given above are minumum values

■ Please call us for special applications or for applications with MCCB's.

ELINEKX

▶▶Feeder Boxes (Central Feeder Boxes BO)

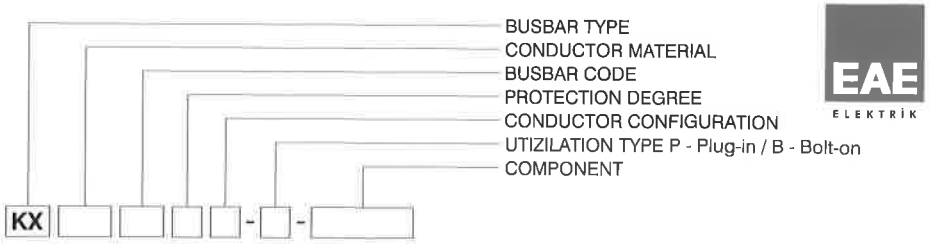

Cable Gland Plates

Busbar Housing Type	Cable Gland Plate	Type
		1
	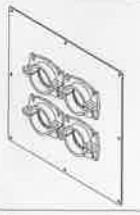	2
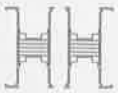	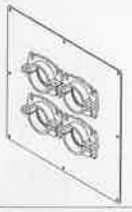	2
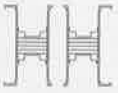		3
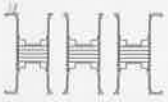	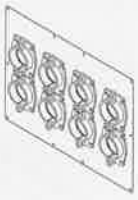	4

Central Feeder Box - B O

Sample Order:

2500 A, Aluminium, Bolt-on
4conductors

KXA 25504 - B - BO

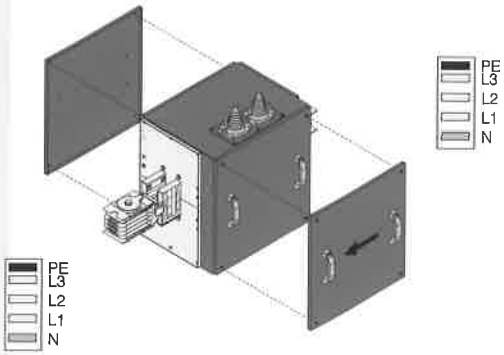

BO

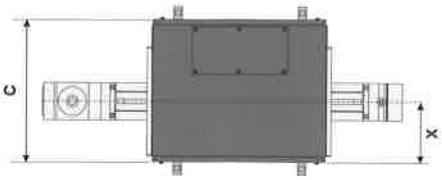

Ampere Ratings

KXA - Al Conductor		KXC - Cu Conductor		A	B	C	X	Gland Type
Rated Current	Busbar Code	Rated Current	Busbar Code	(mm)	(mm)	(mm)	(mm)	
630	06	800	08	500	520	405	175	1
800	08	1000	10	500	520	405	175	1
-	-	1250	12	500	520	405	175	1
1000	10	1350	14	500	520	405	175	1
1250	12	1600	16	500	520	405	175	1
1350	14	-	-	700	520	805	277,5	2
-	-	2000	20	700	520	805	277,5	2
1600	17	-	-	700	520	805	277,5	2
-	-	2250	21	700	520	805	277,5	2
2000	20	2500	25	700	520	805	277,5	2
2500	27	-	-	700	520	805	277,5	3
-	-	2000	22	700	520	805	277,5	2
-	-	2500	26	700	520	805	277,5	2
2500	25	3300	32	700	520	805	277,5	3
-	-	3600	36	700	520	805	277,5	3
3000	32	4000	40	850	520	1005	385	3
3200	33	-	-	850	520	1005	385	3
-	-	4250	43	850	520	1005	385	3
4000	40	5000	50	850	520	1005	385	3
5000	50	6300	63	850	650	1005	385	4

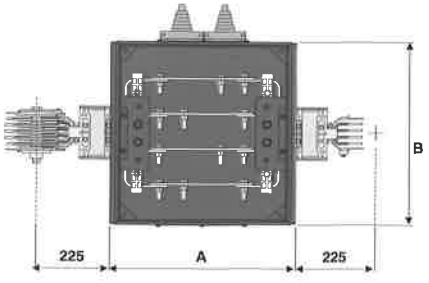

■ The dimensions given above are minumum values.

■ Please call us for special applications or for applications with MCCB's.

Supports
FIXING ELEMENTS

Description	Order Code
KX Fixing Clamp for Binrak(Unistrut) Channel	2011227



Description	Order Code
KX Fixing Clamp for Steel Angle Profile	2011226



■ Please call us for non-standard components.

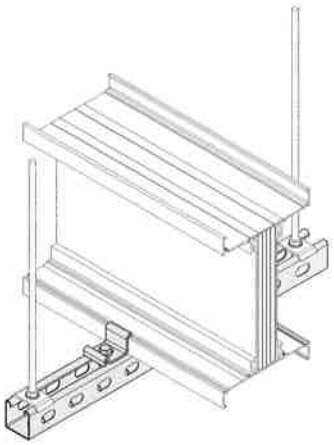

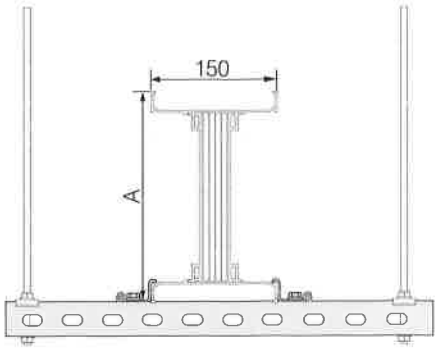

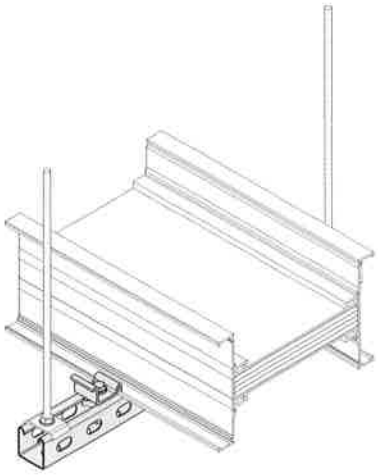

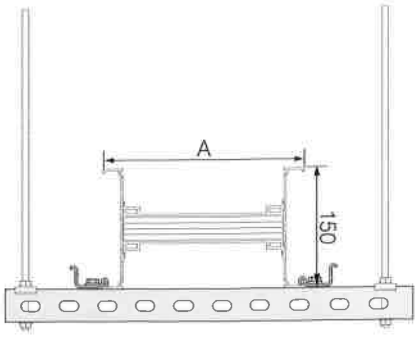

Supports

KX - BRA HANGER SET FOR EDGEWISE APPLICATION TO BINRAK (UNISTRUT) CHANNEL

Al Conductor		Cu Conductor		L	A	Order Code
Rated Current	Busbar Code	Rated Current	Busbar Code	(mm)	(mm)	
630	06	800	08	350	91	3025372
800	08	1000	10	350	106	3025372
-	-	1250	12	350	121	3025372
1000	10	1350	14	350	131	3025372
1250	12	1600	16	350	161	3025372
1350	14	-	-	350	176	3025372
-	-	2000	20	350	191	3025372
1600	17	-	-	350	211	3025372
-	-	2250	21	350	211	3025372
2000	20	2500	25	350	251	3025372
2500	27	-	-	350	301	3025372

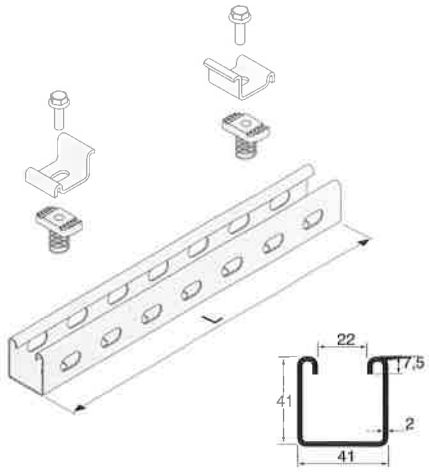

KX - BRA HANGER SET FOR FLATWISE APPLICATION TO BINRAK (UNISTRUT) CHANNEL

Al Conductor		Cu Conductor		L	A	Order Code
Rated Current	Busbar Code	Rated Current	Busbar Code	(mm)	(mm)	
630	06	800	08	300	91	3025372
800	08	1000	10	300	106	3025372
-	-	1250	12	300	121	3025372
1000	10	1350	14	300	131	3025372
1250	12	1600	16	350	161	3025373
1350	14	-	-	350	176	3025373
-	-	2000	20	400	191	3025374
1600	17	-	-	400	211	3025374
-	-	2250	21	400	211	3025374
2000	20	2500	25	450	251	3025375
2500	27	-	-	450	301	3025375

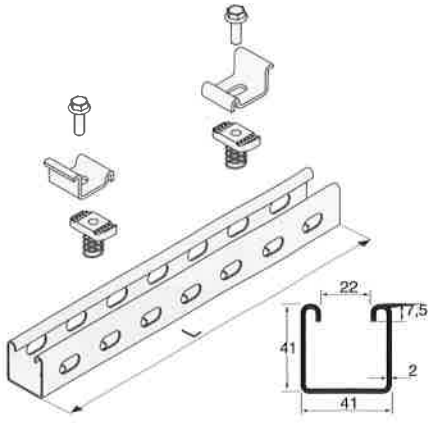

■ Please call us for non-standard components.

ELINEKX

▶▶ Fixing Elements

Supports

KX - UT HANGER SET FOR EDGEWISE APPLICATION TO NPU CHANNEL

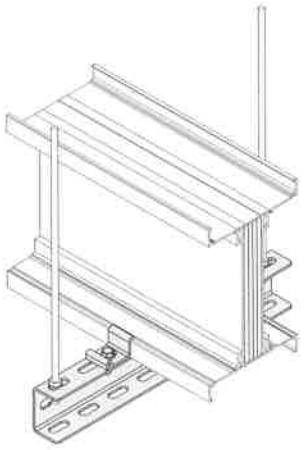

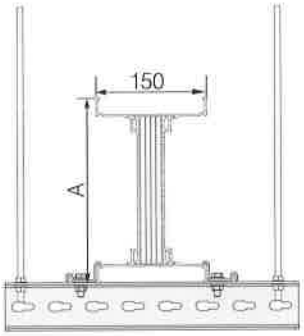

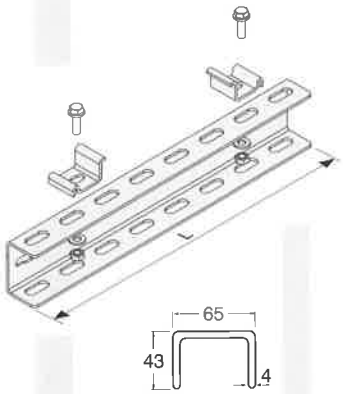

Al Conductor		Cu Conductor		L	A	Order Code
Rated Current	Busbar Code	Rated Current	Busbar Code	(mm)	(mm)	
630	06	800	08	350	91	3025348
800	08	1000	10	350	106	3025348
-	-	1250	12	350	121	3025348
1000	10	1350	14	350	131	3025348
1250	12	1600	16	350	161	3025348
1350	14	-	-	350	176	3025348
-	-	2000	20	350	191	3025348
1600	17	-	-	350	211	3025348
-	-	2250	21	350	211	3025348
2000	20	2500	25	350	251	3025348
2500	27	-	-	350	301	3025348
-	-	2000	22	350	202	3025348
-	-	2500	26	350	252	3025348
2500	25	3300	32	350	312	3025348
-	-	3600	36	350	342	3025348
3000	32	4000	40	350	372	3025348
3200	33	-	-	350	412	3025348
-	-	4250	43	350	412	3025348
4000	40	5000	50	350	492	3025348
5000	50	6300	63	350	732	3025348

KX - UT HANGER SET FOR FLATWISE APPLICATION TO NPU CHANNEL

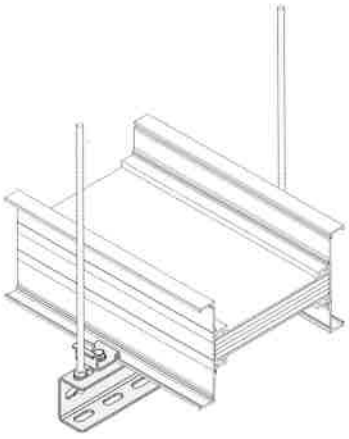

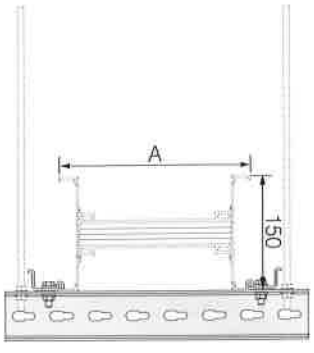

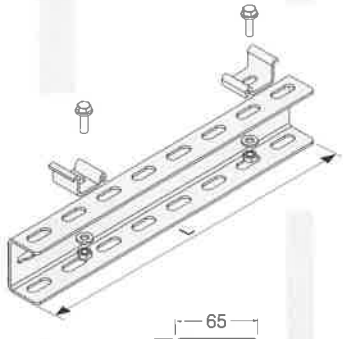

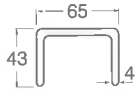

Al Conductor		Cu Conductor		L	A	Order Code
Rated Current	Busbar Code	Rated Current	Busbar Code	(mm)	(mm)	
630	06	800	08	300	91	3025347
800	08	1000	10	300	106	3025347
-	-	1250	12	300	121	3025347
1000	10	1350	14	300	131	3025347
1250	12	1600	16	350	161	3025348
1350	14	-	-	350	176	3025348
-	-	2000	20	400	191	3025349
1600	17	-	-	400	211	3025349
-	-	2250	21	400	211	3025349
2000	20	2500	25	450	251	3025350
2500	27	-	-	450	301	3025350
-	-	2000	22	400	202	3025349
-	-	2500	26	450	252	3025350
2500	25	3300	32	500	312	3025351
-	-	3600	36	550	342	3025352
3000	32	4000	40	550	372	3025352
3200	33	-	-	600	412	3025353
-	-	4250	43	600	412	3025353
4000	40	5000	50	700	492	3025354
5000	50	6300	63	900	732	3025355

■ Please call us for non-standard components.

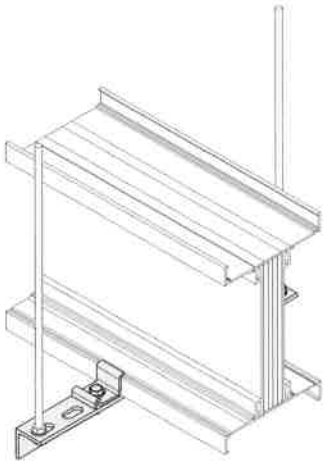

Supports

KX HANGER SET FOR EDGEWISE APPLICATION TO STEEL ANGLE PROFILE

Al Conductor		Cu Conductor		L	A	Order Code
Rated Current	Busbar Code	Rated Current	Busbar Code	(mm)	(mm)	
630	06	800	08	350	91	3025344
800	08	1000	10	350	106	3025344
-	-	1250	12	350	121	3025344
1000	10	1350	14	350	131	3025344
1250	12	1600	16	350	161	3025344
1350	14	-	-	350	176	3025344
-	-	2000	20	350	191	3025344
1600	17	-	-	350	211	3025344
-	-	2250	21	350	211	3025344
2000	20	2500	25	350	251	3025344
2500	27	-	-	350	301	3025344

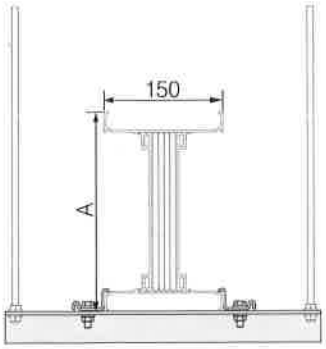

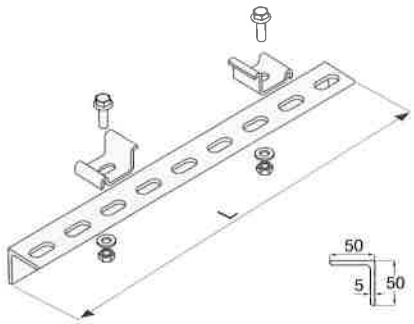

KX HANGER SET FOR FLATWISE APPLICATION TO STEEL ANGLE PROFILE

Al Conductor		Cu Conductor		L	A	Order Code
Rated Current	Busbar Code	Rated Current	Busbar Code	(mm)	(mm)	
630	06	800	08	300	91	3025343
800	08	1000	10	300	106	3025343
-	-	1250	12	300	121	3025343
1000	10	1350	14	300	131	3025343
1250	12	1600	16	350	161	3025344
1350	14	-	-	350	176	3025344
-	-	2000	20	400	191	3025345
1600	17	-	-	400	211	3025345
-	-	2250	21	400	211	3025345
2000	20	2500	25	450	251	3025346
2500	27	-	-	450	301	3025346

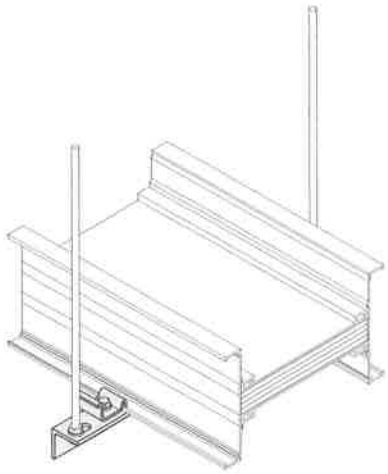

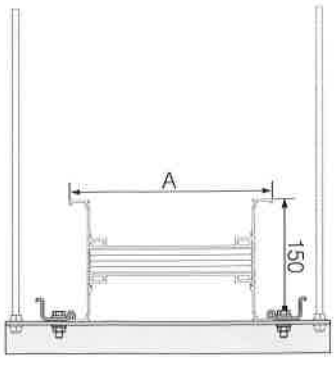

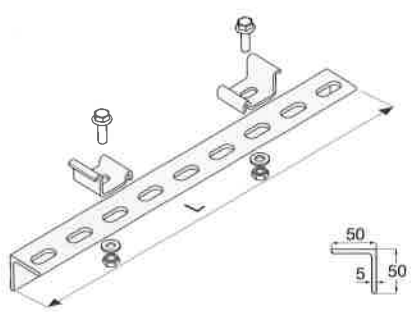

■ Please call us for non-standard components.

ELINEKX

▶▶ Fixing Elements

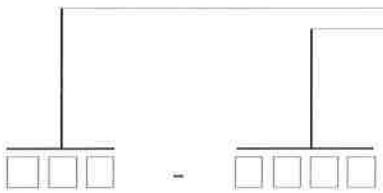

Supports

IDY

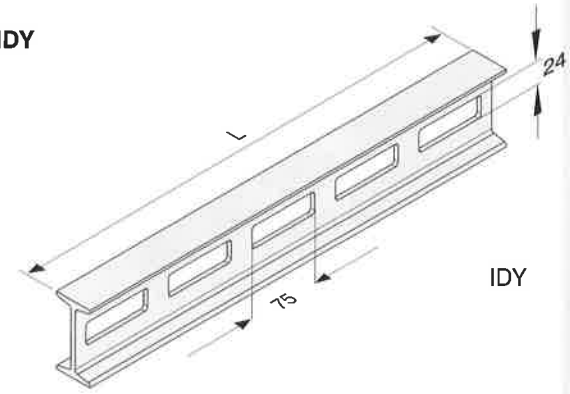

IDY

Description	L (mm)	Code
IDY 300	300	3008242
IDY 400	400	3008290
IDY 500	500	3008289
IDY 600	600	3008288
IDY 700	700	3008287
IDY 800	800	3008286
IDY 900	900	3008285
IDY 1000	1000	3008284
IDY 1100	1100	3008283
IDY 1200	1200	3008282
IDY 1300	1300	3008236
IDY 1400	1400	3008281
IDY 1500	1500	3008280
IDY 1600	1600	3008241
IDY 1700	1700	3008240
IDY 1800	1800	3008239
IDY 1900	1900	3008238
IDY 2000	2000	3008237

IDD

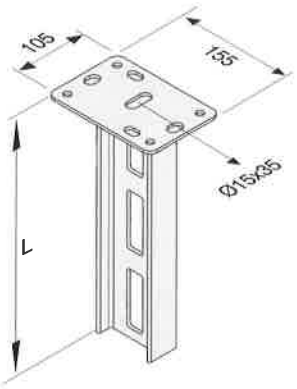

IDD

IDD 300	300	3008314
IDD 400	400	3008313
IDD 500	500	3008312
IDD 600	600	3008311
IDD 700	700	3008310
IDD 800	800	3008309
IDD 900	900	3008308
IDD 1000	1000	3008307
IDD 1100	1100	3008306
IDD 1200	1200	3008305
IDD 1300	1300	3008304
IDD 1400	1400	3008303
IDD 1500	1500	3008302
IDD 1600	1600	3008301
IDD 1700	1700	3008300
IDD 1800	1800	3008299
IDD 1900	1900	3008298
IDD 2000	2000	3008297

IDT

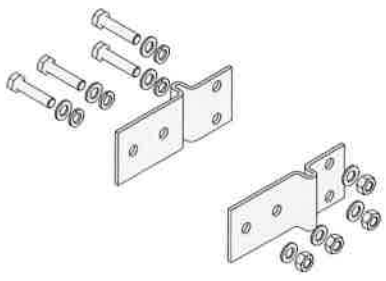

IDT

IDT Support Fitting	-	3008279

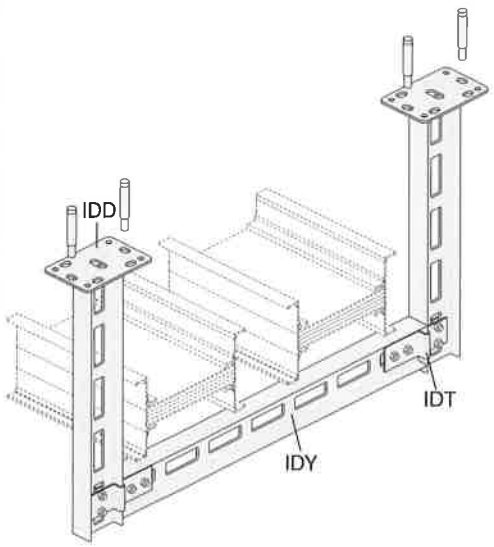

■ Please call us for non-standard components.

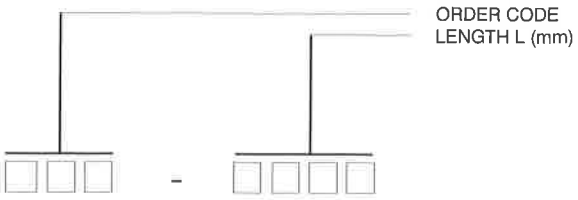

Supports

UPY

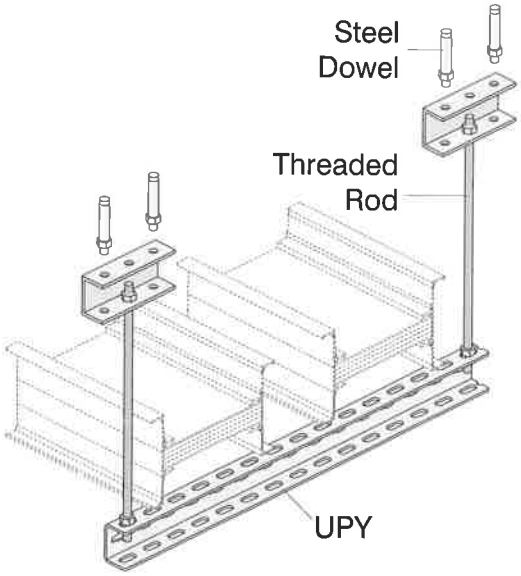

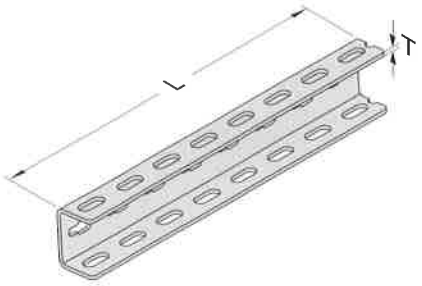

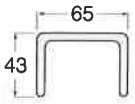

Description	T (mm)	L (mm)	Code
UPY 300	4	300	3004487
UPY 400	4	400	3004489
UPY 500	4	500	3004491
UPY 600	4	600	3004493
UPY 700	4	700	3004495
UPY 800	4	800	3004496
UPY 900	4	900	3004497
UPY 1000	4	1000	3004498
UPY 1100	4	1100	3004499
UPY 1200	4	1200	3004500
UPY 1500	4	1500	3004503

■ Please call us for non-standard components.

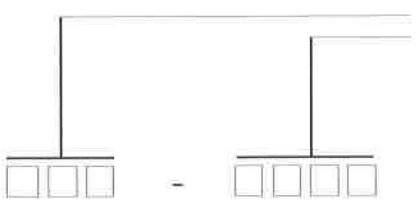

Supports

UDY

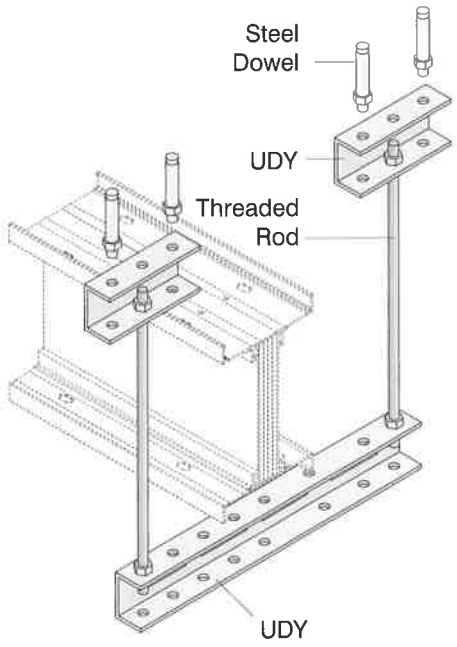

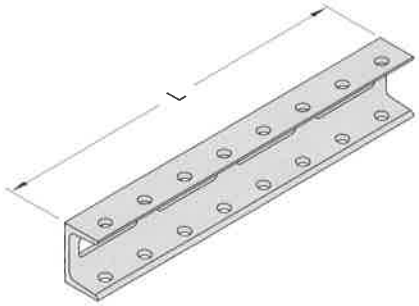

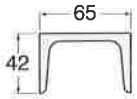

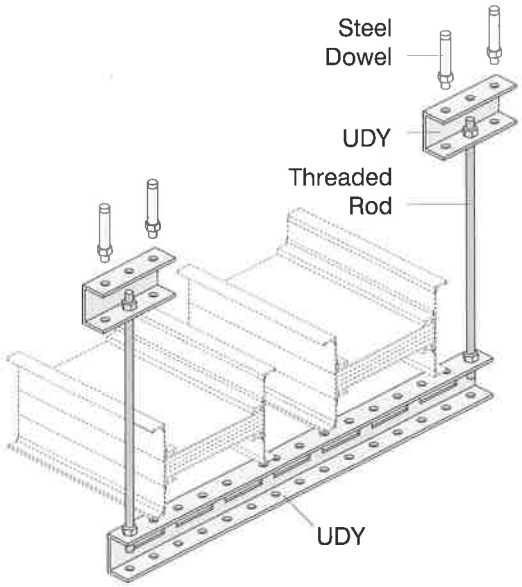

Description	L (mm)	Code
UDY 300	300	3008023
UDY 400	400	3008024
UDY 500	500	3008025
UDY 600	600	3008026
UDY 700	700	3008027
UDY 800	800	3008028
UDY 900	900	3008029
UDY 1000	1000	3008030
UDY 1100	1100	3008031
UDY 1200	1200	3008032
UDY 1300	1300	3008033
UDY 1400	1400	3008034
UDY 1500	1500	3008035
UDY 1600	1600	3008036
UDY 1700	1700	3008037
UDY 1800	1800	3008038
UDY 1900	1900	3008039
UDY 2000	2000	3008040

■ Please call us for non-standard components.

ELINEKX

Fixing Elements

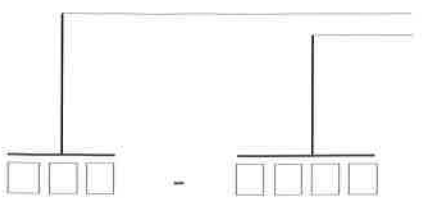

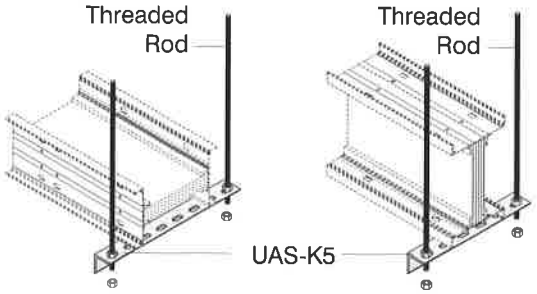

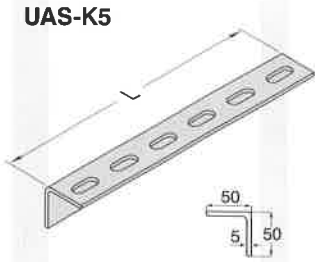

Supports

Description	L (mm)	Code
UAS-K5 SUPPORT (1)	200	3005324
UAS-K5 SUPPORT (2)	250	3005323
UAS-K5 SUPPORT (3)	300	3005322
UAS-K5 SUPPORT (4)	350	3005321
UAS-K5 SUPPORT (5)	400	3005320
UAS-K5 SUPPORT (6)	500	3005319
UAS-K5 SUPPORT (7)	600	3005318
UAS-K5 SUPPORT (8)	700	3005317
UAS-K5 SUPPORT (9)	1100	3005316

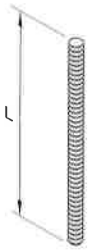

Threaded Rod

Extension Unit

Steel Dowel

Diameter of the hole to be drilled
M10.....Ø14
M12.....Ø16

Steel Nut

Washer

Connection Units

Description	L (mm)	Code
BRA 12-05 Threaded Rod (M10)	500	5000037
BRA 12-10 Threaded Rod (M10)	1000	5000032
BRA 14-05 Threaded Rod (M12)	500	5000026
BRA 14-10 Threaded Rod (M12)	1000	5000034
BRA 13 Extension Unit (M10)	-	1004312
BRA 13 Extension Unit (M12)	-	1004282
BRA 9 Steel Dowel (M10)	-	5000023
BRA 9 Steel Dowel (M12)	-	5000022
M10 Steel Nut	-	1000522
M12 Steel Nut	-	1000964
M10 Washer	-	1000504
M12 Washer	-	1000505

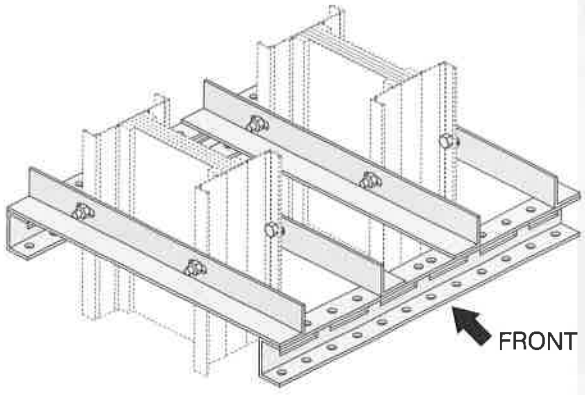

Vertical Riser Application
Sample Order Hanging
(Special to project)

■ Please call us for non-standard components.

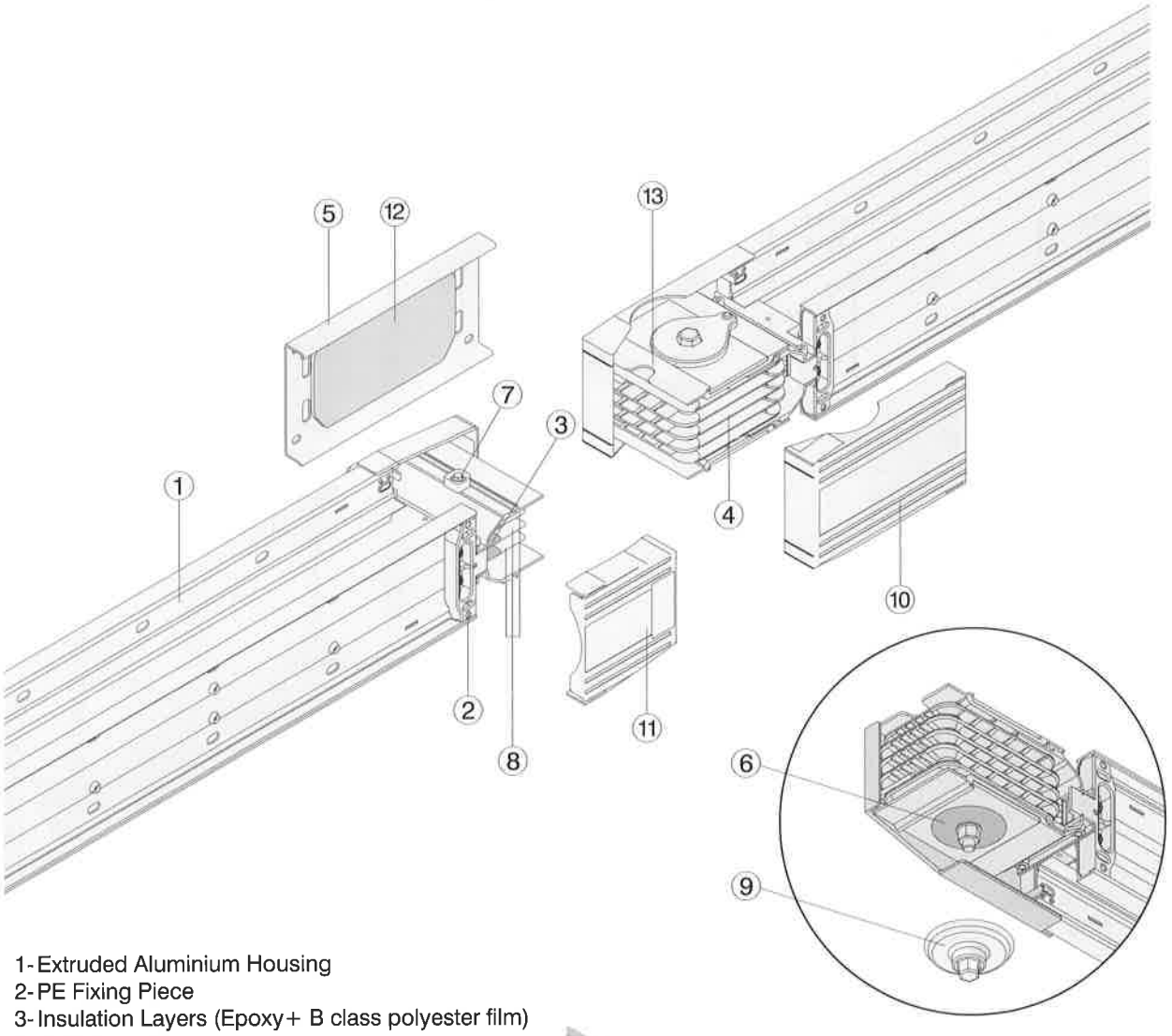

1- Extruded Aluminium Housing
2- PE Fixing Piece
3- Insulation Layers (Epoxy+ B class polyester film)
4- Joint Insulators
5- Joint Cover
6- Belleville
7- Alignment Pin (removable)
8- Conductors
9- IP55 Nut Locking Piece
10- Protection Plastic (For the joint)
11- Protection Plastic (End)
12- IP55 Joint Cover Gasket
13- Alignment Pin Slot

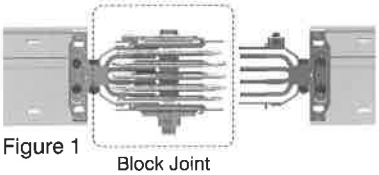

Figure 1 Block Joint



Figure 2 Alignment Slot Alignment Pin (removable)

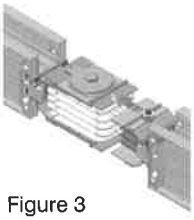

Figure 3

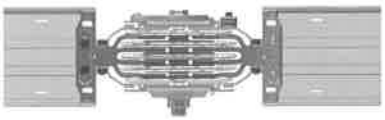

Figure 4 Joint assembly

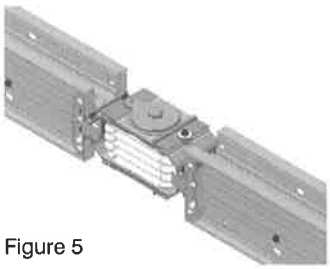

Figure 5

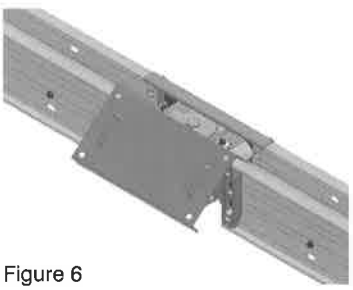

Figure 6

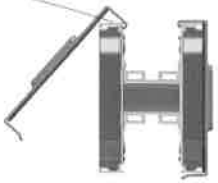

Please check related installation manual for details .

ELINEKX

▶▶ Measuring a Special Length

After installation of standard busbar 3m lengths, you will be in need of special lengths which are smaller than 3m.The minimum length for these special elements can be 35 cm. Please measure the lengths of these modules as shown below.

Length A is measured between housing of 2 busbars in cm. A. The special length is calculated by deducting 25 cm from this measured length.

X=A-25 (cm) X=Length of Special Busbar (The busbar module will be manufactured as per X value.)

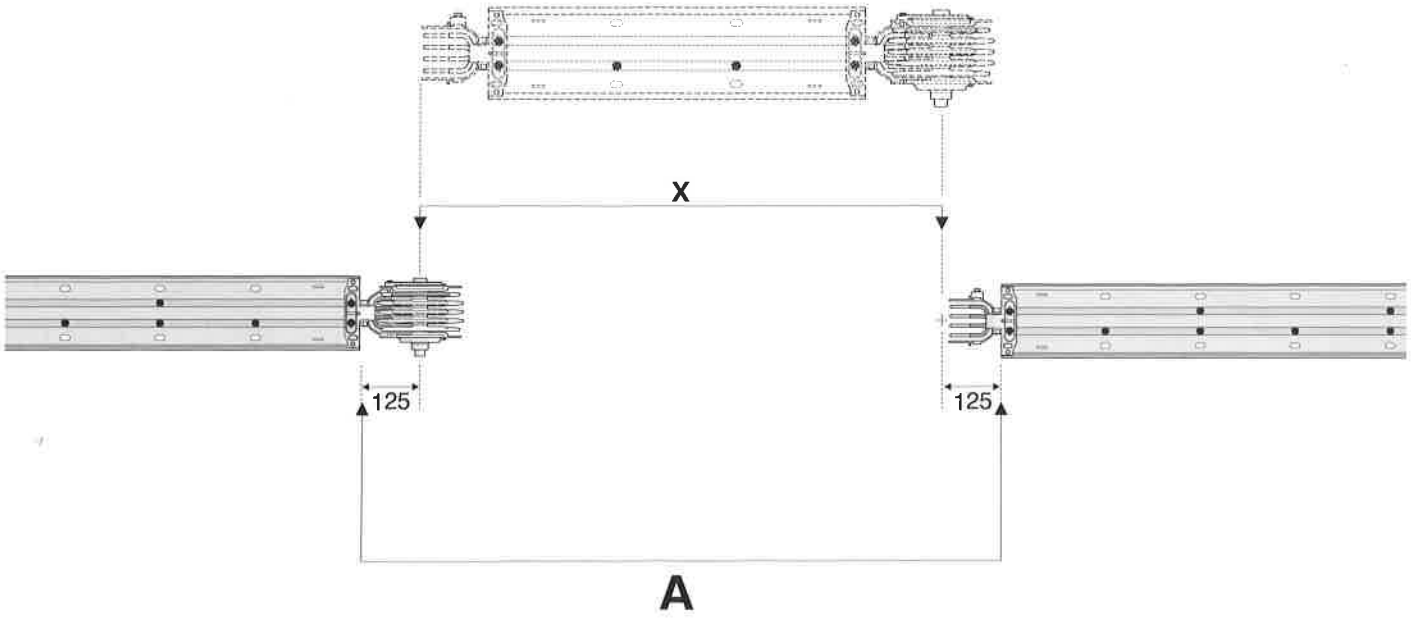

■ Please call us for non-standard components.

ELINEKX

▶▶ Inserting "Make up Section"

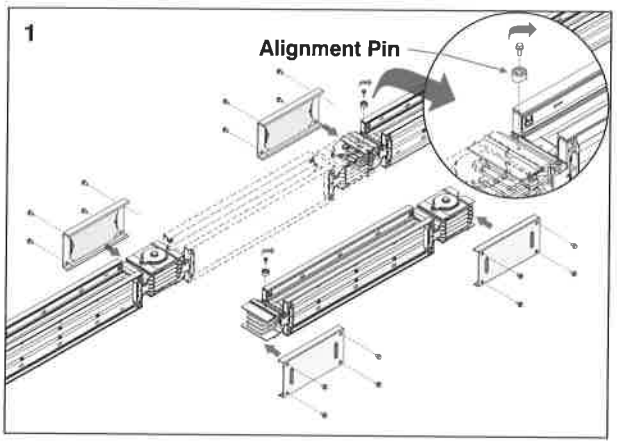

1- Remove Alignment Pin on the busbar, without block joint.

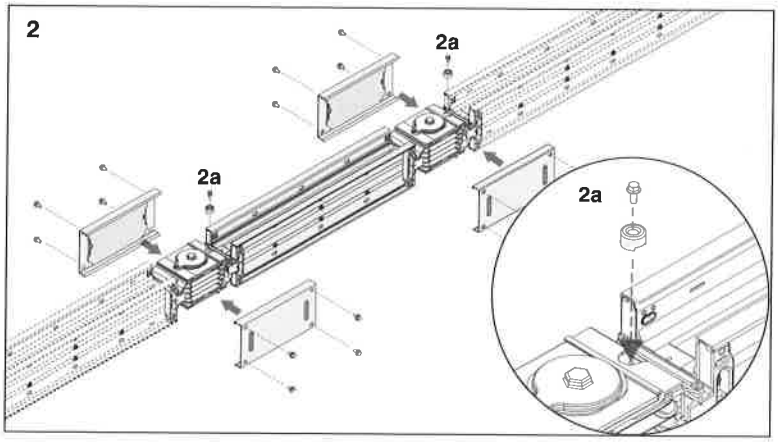

2- Insert the piece aligning conductors correctly. Fix back the Alignment pin.

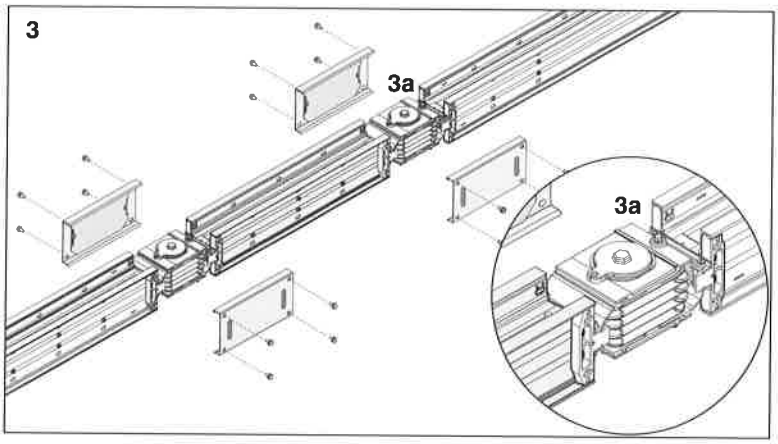

3- Make sure busbar piece is aligned according to alignment pin.

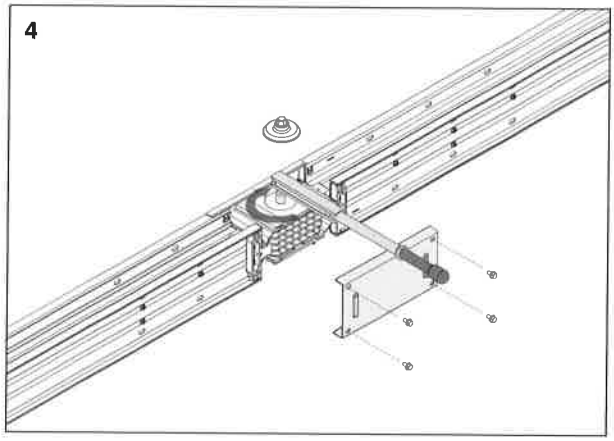

4- Fix one of the joint cover to stabilize joint. Apply 83Nm to the main bolt.

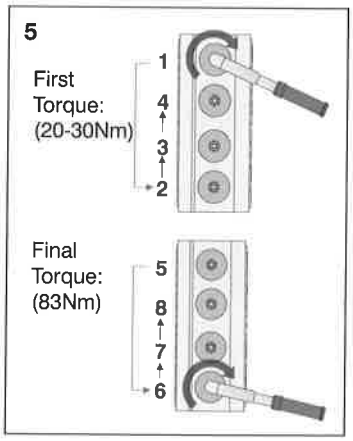

5- If there are more than one bolt for the same phase, bolts shall be tighten by hand approximately 20-30Nm as per above sequence, then 83Nm shall be applied at final torque with the same sequence.

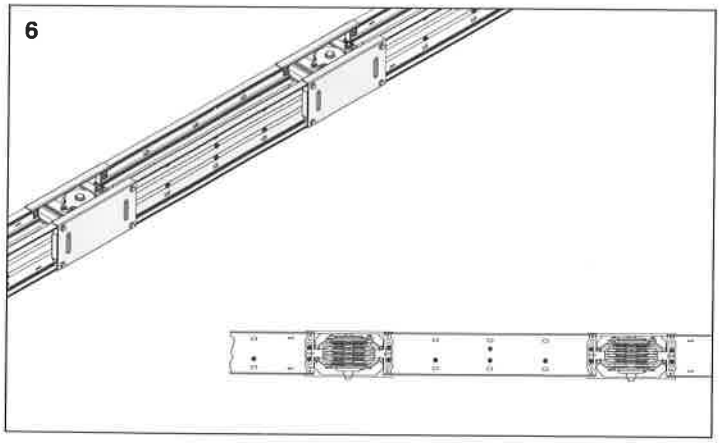

6- Fix the remaning joint cover.
Joint installation is completed.

Note: If the final joint cover does not close correctly, it indicates the busbar is not completely aligned. Release the bolts and reapply the sequence from figure 4 to complete the joint.

Please check related installation manual for details.

CE DECLARATION OF CONFORMITY

Product Group E-Line KX Busbar Energy Distribution System

Manufacturer EAE Elektrik Asansor End. Insaat San. ve Tic. A.S.
Akcaburgaz Mahallesi, 119. Sokak,
No:10 34510 Esenyurt-Istanbul

This is to attest, under our sole responsibility, that the aforementioned products conforms with the determined regulations,guidelines and the below standards.

Standard : IEC 60439-1
IEC 60439-2
IEC 60331

CE - Directive
2006/95/EC "Low Voltage Directive"

Type Tests include verification of;

1- Temperature-rise Limits (8.2.1)
2- Dielectric Properties (8.2.2)
3- Short-circuit Strength (8.2.3)
4- The Effectiveness of The Protective Circuit (8.2.4)
5- Clearances and Creepage Distances (8.2.5)
6- Mechanical Operation (8.2.6)
7- Degree of Protection (8.2.7)
8- The Resistance of Insulating Materials to Abnormal Heat and Fire (8.2.9)
9- Structural Strength (8.2.10)
10- Crushing Resistance (8.2.12)
11- Resistance of Insulating Materials to Abnormal Heat (8.2.13)
12- Resistance to Flame Propagation (8.2.14)
13- Fire Resistance in Building Penetration (8.2.15)

Date

07.04.2008

EAE Elektrik A.Ş.

EAE Elektrik Asansor End. Insaat San. ve Tic. A.S.
Akcaburgaz Mahallesi, 119. Sokak, No:10 34510 Esenyurt-Istanbul
Tel: +90 (212) 866 20 00 Fax: +90 (212) 886 24 20 http://www.eae.com.tr

ELINEKX

▶▶ Certificate

EAE ELEKTRİK

KEMA







TESTATI FORMIT

ölgesi
ad No. 112

Turkey

For the product:

Busbar trunking system



by:



ölgesi
ad No. 112



This Attestation is granted on account of tests made in our laboratory, the results of which are laid

es)



carried out on one
ttestation does not
duction with the sp

oduct, submitte
he manufacture
s not the respon





2002

L.J.W. van Megen







is allowed. Publication in t
wed unless permission has

whatever way of the co
port(s) or by previous le

Arnhem. P.O. Box 5185, 68
m: Telephone +31 26 3 56

630A ... 6300A COMPACT BUSBAR PRODUCT OVERVIEW (E-LINE KX)

1- Standards & Certification:

-Busbar system shall be designed and manufactured as per IEC 60439-2/1 standard, which requires below listed tests. Each busbar rating shall have a separate type test certificate from an independent internationally accredited laboratory including below tests:
8.2.1- Temperature Rise Limits, 8.2.2- Dielectric Features, 8.2.3- Short-circuit Duration, 8.2.4- Effectiveness of Protection Circuit, 8.2.5- Clearances and Creepage Distances, 8.2.6- Mechanical Operation, 8.2.7- Protection Degree, 8.2.9- Resistance of Insulation Material to Abnormal Heat , 8.2.10- Structural Duration, 8.2.12- Crushing Resistance, 8.2.13- Electrical Characteristics, 8.2.14- Flame Propagation, 8.2.15- Fire Resistance (Fire Barrier).
- Busbar system shall have CE marking.
-The manufacturer of busbar system shall have ISO 9001 and ISO 14001 certification.
-Each product shall have a "Type Label" including coding system, which identifies the brand, type of the unit, number of conductors and electrical details. The same coding shall be on the related certificate and catalogue.

2- Electrical Characteristics

- Busbar systems nominal insulation voltage shall be 1000 V.
- As per ampere rates, minimum short circuit values shall be as given below;

For Aluminium Conductors;	630A	:1 sec/rms 25kA, Peak 52,5kA
	800A	:1 sec/rms 35kA, Peak 73,5kA
	1000A	:1 sec/rms 50kA, Peak 105kA
	1250-1350	:1 sec/rms 60kA, Peak 132kA
	1600-2000A	:1 sec/rms 80kA, Peak 176kA
	2500A	:1 sec/rms 100kA,Peak 220kA
	3200A and above	:1 sec/rms 120kA,Peak 264kA

For Copper Conductors;	800A	:1 sec/rms 40kA, Peak 84kA
	1000A	:1 sec/rms 50kA, Peak 105kA
	1250-1350A	:1 sec/rms 60kA, Peak 132kA
	1600-2000-2250-2500A	:1 sec/rms 80kA, Peak 176kA
	2000A	:1 sec/rms 70kA, Peak 154kA
	2500A	:1 sec/rms 100kA,Peak 220kA
	3300A and above	:1 sec/rms 120kA,Peak 264kA

2.1- Housing

-Busbar system shall have "Sandwich-Compact" structure. Conductors shall be packed and placed into the housing without leaving air gap in order to provide low reactance.
-Housing shall be made of thermal processed, extruded aluminium, RAL7038-Electrostatic painted.
-Compact structure of the housing shall be provided by M6 screws applied at every 19cm along the entire length.
-The sandwich-compact structure shall continue at the plug-in points too. There shall not be air gap between conductors at the plug-in points.

2.2- Conductors

Aluminium or Copper conductors shall be epoxy coated and tin plated at the joints upon the wire configuration and required numbers, which are described below.
-Compact busbar system shall have aluminium conductors between 630A – 5000A.
- Compact busbar system shall have copper conductors between 800A – 6300A.
- Compact busbar system shall have the following number of conductors and wire configuration;
a) 4 Conductors: (4 full size conductors + PE (housing)).
b) 4 ½ Conductors: (4 full size conductors + PE (50% earth conductor + housing)),
c) 5 Conductors: (5 full size conductors + PE (100% earth conductor + housing)),
-Phase conductors and neutral conductor shall have the same cross-section and they shall be insulated.
- Aluminium conductors shall be of EC grade aluminium. Minimum conductivity shall be 34m/mm².Ω.
-Copper conductors shall be minimum 99,95% electrolytic copper. Minimum conductivity shall be 56m/mm².Ω.

2.3- Insulation

- Insulation system shall be suitable for 1.000V continuous operation. Conductors shall be minimum thermo-set epoxy coated. Conductor size shall be designed so that temperature rise on the conductors shall not exceed 100C degree at nominal current, which helps to global heating problem. With this reason, insulation class shall be "B class".

2.4- Joint Structure

- Electrical and mechanical connection shall be made by placing conductor joints into the joint blocks of the connected conductors and followed by tightening and fastening of the joint bolts.

2.5- Protection

- Protection degree of the housing and joints shall be IP55/IP65.

2.6- Acessories

- Busbar system shall have all necessary accessories (elbows, offsets, panel-transformer connections, reductions, etc.) Manufacturer shall supply special dimensioned units in short time, if the project conditions requires.
-For horizontal runs, a horizontal expansion unit shall be used at every 40m and expansion points of the building.
-For vertical applications, a vertical expansion unit shall be used at every floor. Busbar system shall be rigidly fixed by supports at every floor.

3- Tap Off Boxes

-Both, Feeder and Plug-in busbar systems shall be suitable for bolt-on type tap off box connections at the joints up to 1.000A.
-Bolt-on tap off boxes shall be installed to the joints without changing or adding any piece. Bolt-on tap off boxes shall be able to be moved between different rated busbars.
-Plug-In busbars shall have minimum 2 plug-in points on each 300cm length. Plug-in tap off box sizes shall be up to 630A. Unused plug-in points shall have covers, which can provide IP55 protection degree.
-Plug-in tap off boxes shall be suitable to install or removed from busbars without switching off the power on the busbar.
-Contacts of plug-in tap off box shall be plated by silver.
-Tap off boxes shall be manufactured of sheet steel and epoxy painted RAL3020 colour.
-Plug-in tap off boxes shall have electromechanical safety interlock system. Which means;
a-) Electromechanical interlock mechanism shall ensure that the tap off box cannot be removed mechanically from the busbar, when the switch is at "ON" position.
b-) Electromechanical interlock mechanism shall ensure that, cover of the box can be opened only, when the switch is at "OFF" position.
c-)When the cover is opened, inside protection degree shall be minimum IP2X against accessing to live conductors.
d-) While inserting the contacts of plug-in tap off box, earth contact shall make the first touch. While removing, it shall be disconnected last.
-Tap off boxes shall be suitable for any brand of MCCBs. Electromechanical interlock mechanism shall be suitable for all these MCCBs too.

4- Installation and Commisioning

-Busbar systems shall be installed as per Single-Line drawings respect to required ampere rates and manufacturer installation guide (torque values, lockers, etc.). Electrical installator shall run an insulation test after installation according to manufacturers test procedures. The results of the test shall be reported to the manufacturer. Minimum insulation value shall be 1 Mohm.

PRODUCT TYPES




E-LINE KX

Compact Busbar Distribution System
630...6300 A

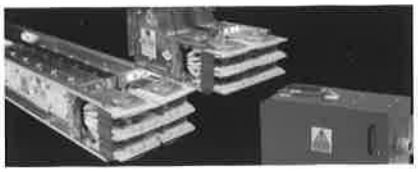


E-LINE KB

Compact Busbar Distribution System
800...6300 A




E-LINE KO

Plug-in Busbar Distribution System
160...800A




E-LINE MK

Small Power Plug-in Busbar Distribution System
100-160-225A




E-LINE KAP

Plug-in Busbar Distribution System
40-63A




E-LINE DL

Multi-Conductor Lighting Busbar System
25-32-40A




E-LINE KAM

Lighting Busbar System
25-32-40A




E-LINE TB

Multi Conductor Trolley Busbar System
35...250A




E-LINE DK

Underfloor Ducting Systems

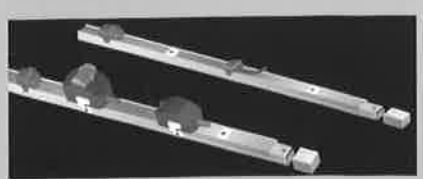


E-LINE DKY

Raised Floor Energy Distribution Systems
25...63A

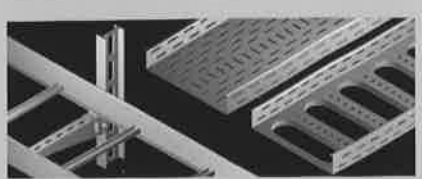


E-LINE UK

Cable
Tray Systems

EAE Elektrik A.Ş.
Akcaburgaz Mahallesi,
119. Sokak, No:10 34510
Esenyurt-Istanbul-TURKEY
Tel: +90 (212) 866 20 00
Fax: +90 (212) 886 24 20
www.eae.com.tr



IEC 60439-2

ME 04

Catalogue 12-Eng. / Rev 06 1000 pcs. 05/08/2013
www.atamatbaa.net / A.C.E./ 612 40 66
EAE has full right to make any revisions or changes on this catalogue without any prior notice.