Installation Handbook for

DuctEasi Fabric Ducting Air Distribution System

DUCTEASI®

Contents

1. Types of wire suspension
2. Components required for installation
3. Installation procedure
4. Commissioning checklist
5. Contact information

DUCTEASI®

1. Types of wire suspension (Single-row)

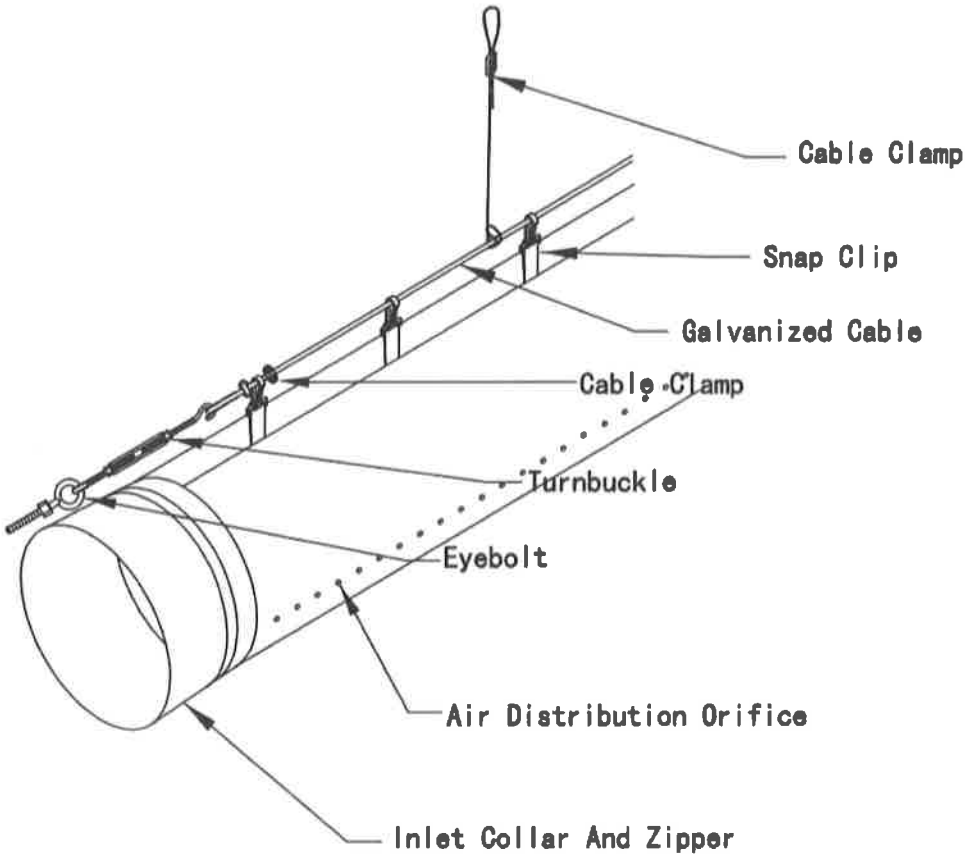

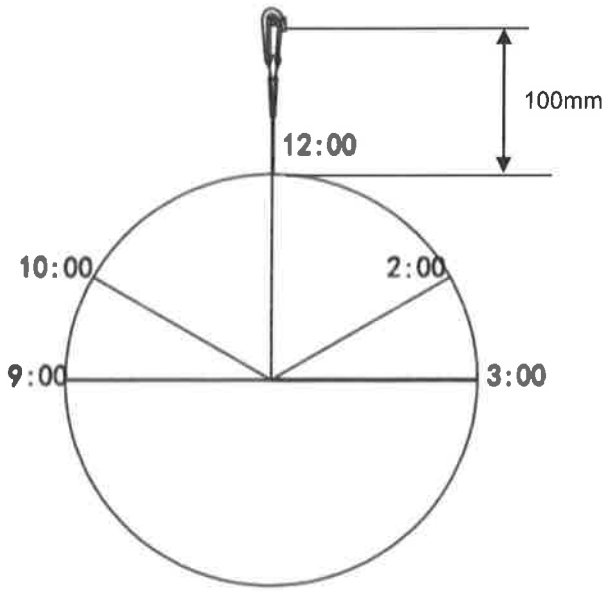

Single-row wire mounting type

For fabric duct diameter less than 300mm

DUCTEASI®

1. Types of wire suspension (Double-row)

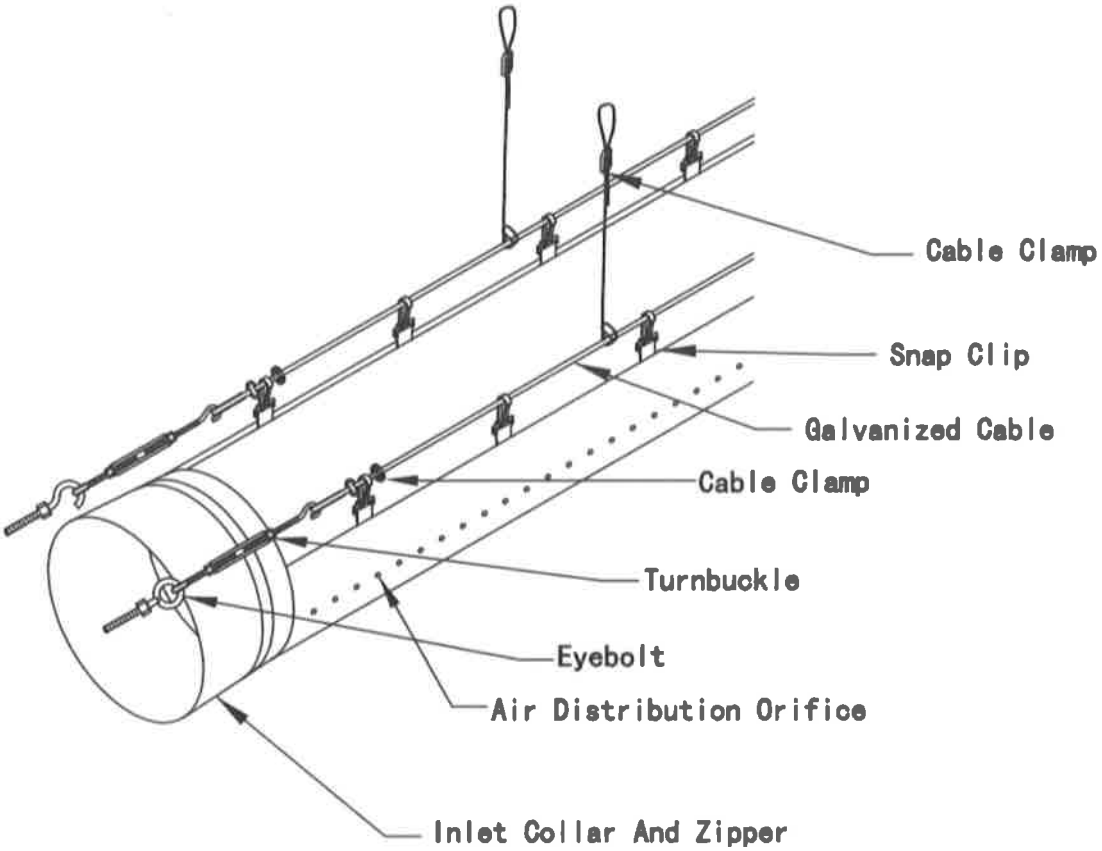

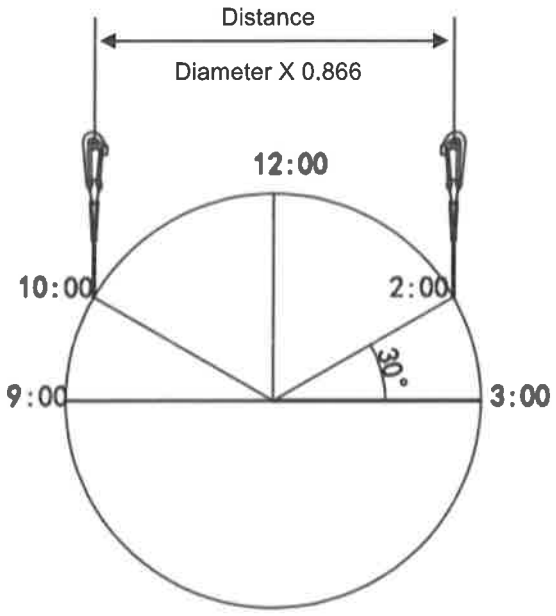

Double-row wire mounting type

For fabric duct diameter greater than 300mm

DUCTEASI®

2. Components required for installation

S/N	Items	Picture (not to scale)
1	Fabric Ducting system (supplied)	
2	Ratchet clamps (supplied)	
3	Standard galvanized wires (supplied)	
4	Wire locknut (supplied)	
5	Turnbuckle (supplied)	
6	Hook expansion bolt (supplied)	

DUCTEASI®

3. Installation Procedure

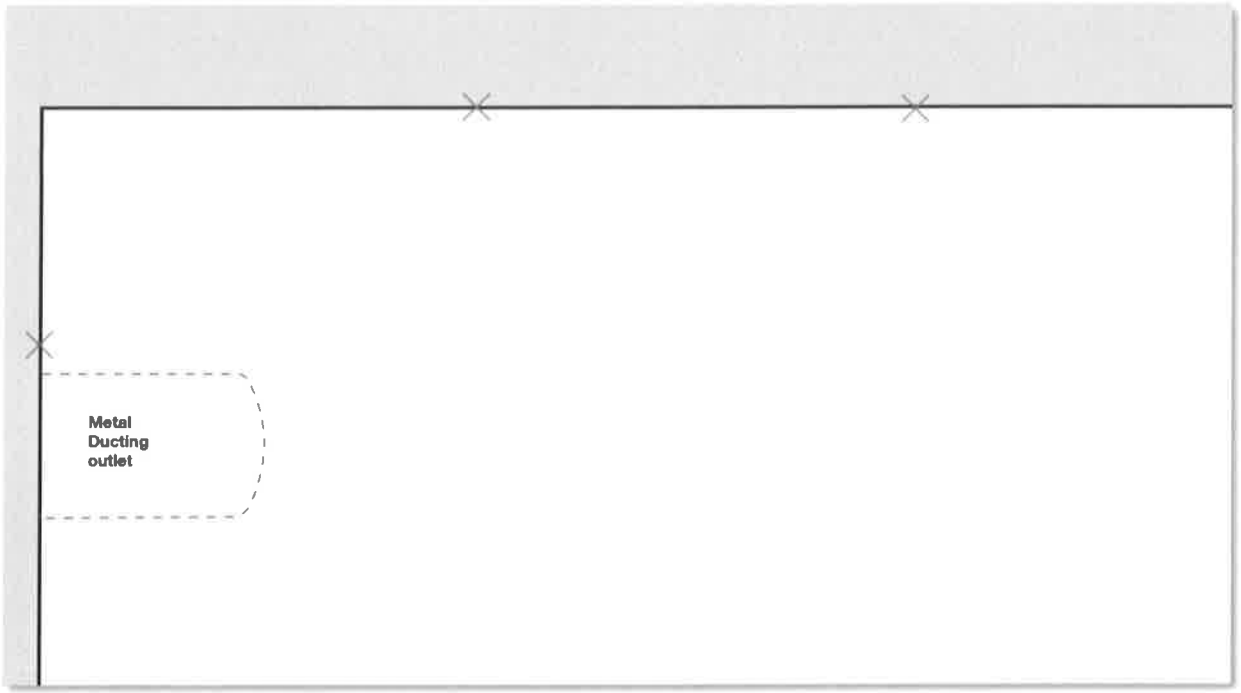

1. Preparation – Make marking of anchor location on the ceiling and wall for drilling.
2. Preparation – Cut galvanized steel wire to the required length.

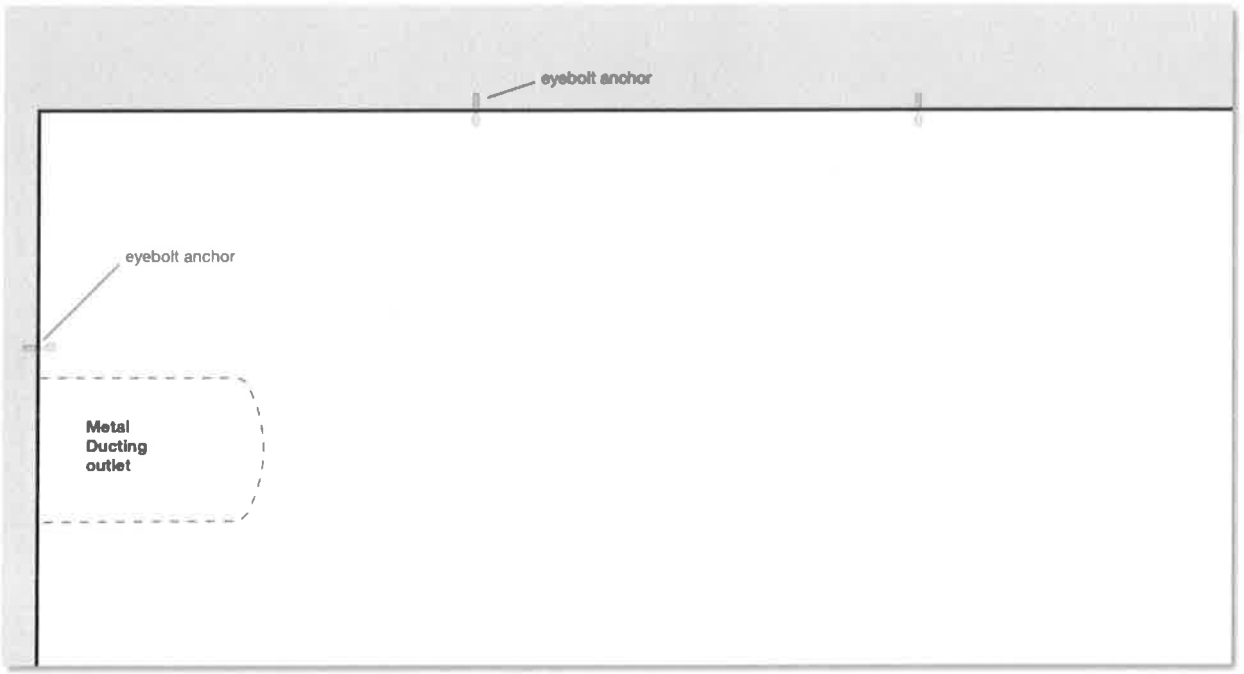

3. Drilling penetration hole for wall and ceiling and install eyebolt anchor.

DUCTEASI®

3. Installation Procedure

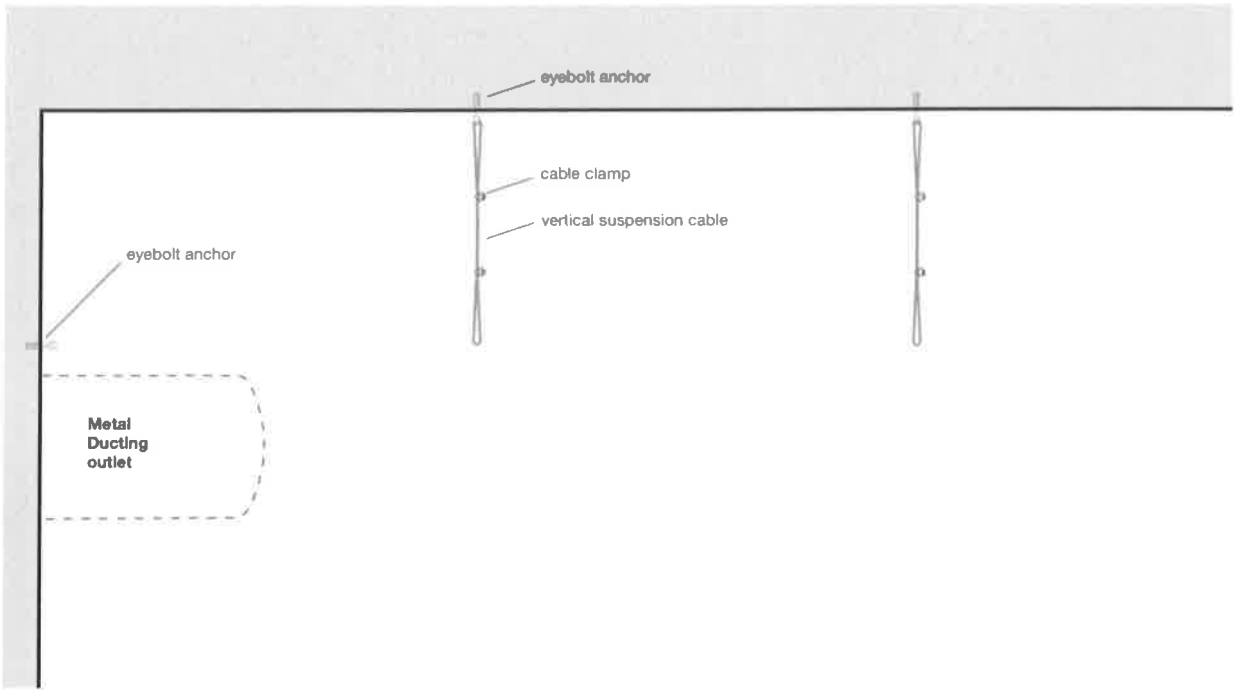

4. Install vertical suspension cable.

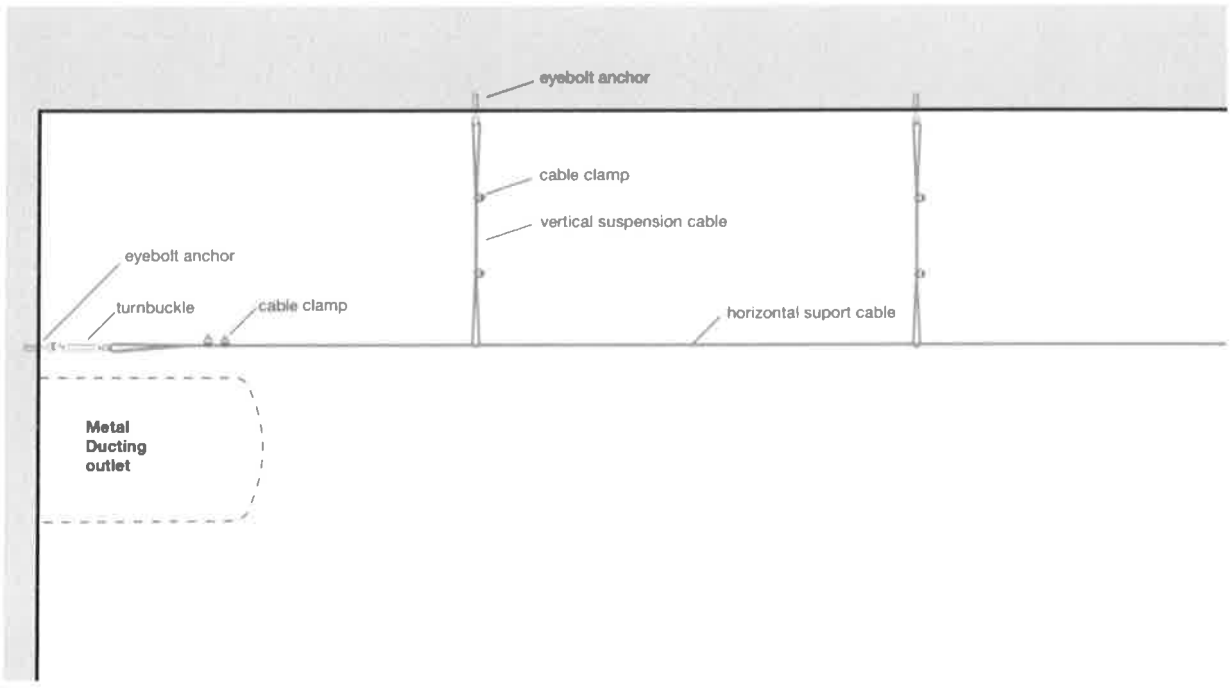

5. Install horizontal support cable and turnbuckle.
6. Adjust vertical suspension cable to desired height using cable clamp.
7. Adjust the desired tension of the horizontal wire using the turnbuckle.

DUCTEASI

3. Installation Procedure

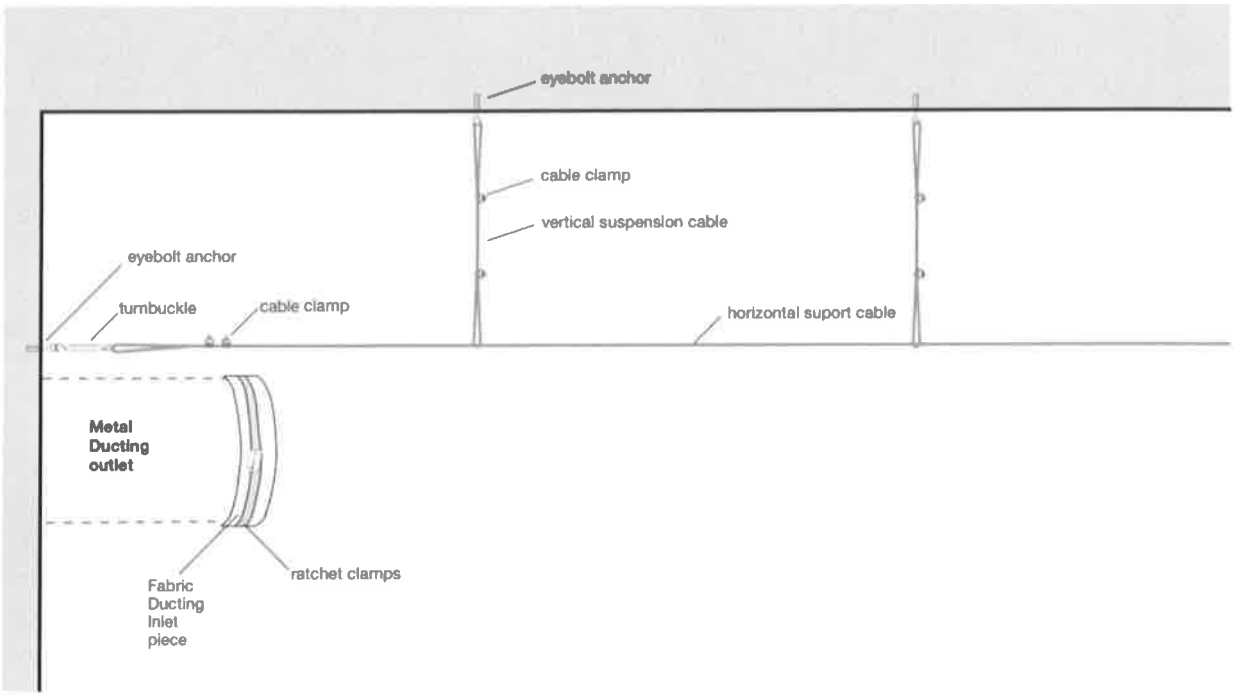

8. Install fabric ducting inlet piece over the metal ducting outlet.
9. Securely fastened the fabric ducting with ratchet clamp.

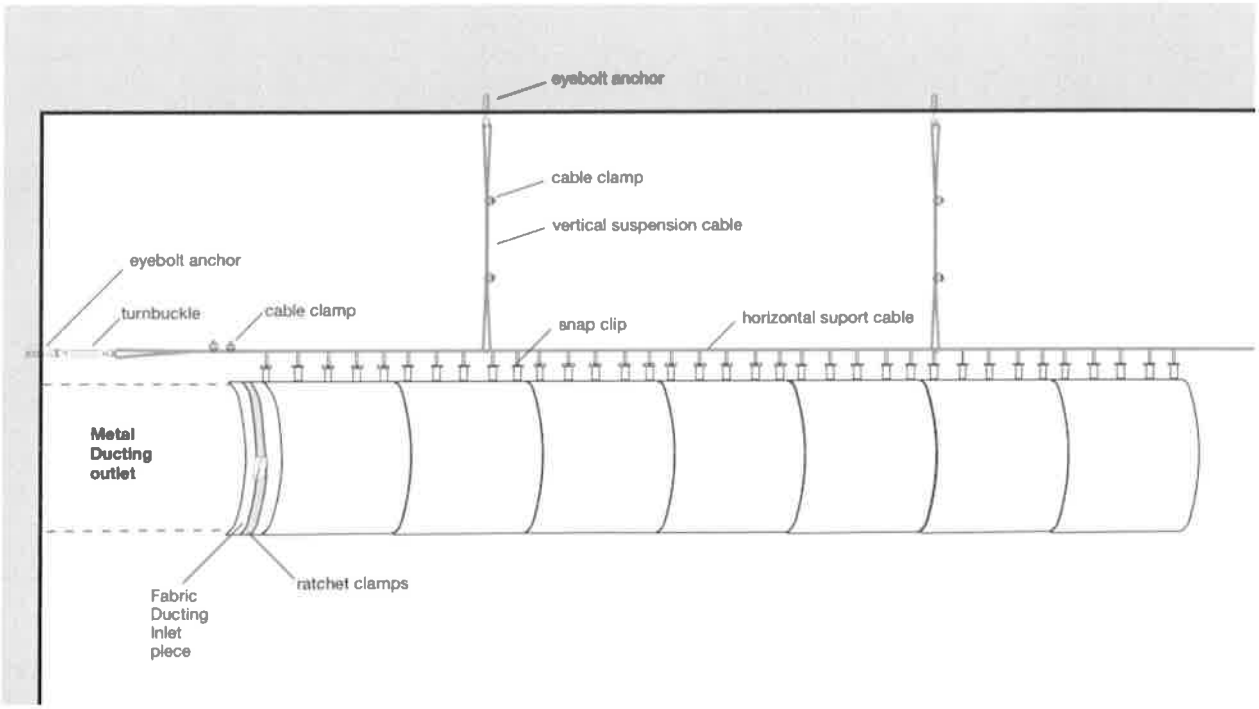

10. Hook and secure the snap clips of the fabric ducting on the horizontal support cable. Start from the 1st snap clip at inlet until the last.
11. Close the zipper on the fabric ducting at the joints.
12. Run through commission checklist before turn on fan blower.

DUCTEASI®

4. Commissioning Checklist

S/N		Checks
1	Mounting	Check that all mounting components are installed.
2		Check for wall and ceiling anchor bolt is securely fastened.
3		Check that horizontal support cable is tensioned with no sagging.
4		Check that vertical suspension cable are securely fasten .
5	Fabric ducting	Check for damages, cracks or tears on the fabric duct.
6		Check zipper connections are securely closed.
7		Check that the control air jets is pointing at the correct direction.
8		Check that all snap clips are securely hooked on horizontal support cable.
9		Check that ratchet clamp on the inlet piece is securely fastened
10		Check that fabric duct is not obstructed by any object or building services.
11	During start –up	Check for abnormal vibration and normal during start-up.
12		Check that all clip, clamp, anchors and zipper remains securely fastened during operation.
13		Check that fabric ducting fully inflated and straighten out.
14		Check for condensation on fabric ducting surface.
15		Check that fabric duct when fully extended is not obstructed by any object or building services.

5. Contact Information

Total Integrated Solutions Pte Ltd
11 Woodlands Close #09-09 Woodlands 11 Singapore 737853
Tel: +65 6755 1455 www.tis33.com

DUCTEASI®