"Single-user licence. Complimentary for BCSC/TC/WG of TR 52 : 2016. - No reproduction or circulation"

SINGAPORE STANDARDS COUNCIL

TR 52 : 2016
(ICS 59.080.99; 91.140.30)

TECHNICAL REFERENCE

Fabric ducting air distribution system – Textile based ventilation

Published by
SPRING singapore
Enabling Enterprise

"Single-user licence Complimentary for BCSC/TC/WG of TR 52 : 2016 -- No reproduction or circulation"

TR 52 : 2016
(ICS 59.080.99; 91.140.30)

TECHNICAL REFERENCE

Fabric ducting air distribution system – Textile based ventilation

All rights reserved. Unless otherwise specified, no part of this Singapore Standard may be reproduced or utilised in any form or by any means, electronic or mechanical, including photocopying and microfilming, without permission in writing from SPRING Singapore at the address below:

SPRING Singapore
1 Fusionopolis Walk
#01-02 South Tower, Solaris
Singapore 138628
Email: standards@spring.gov.sg

ISBN 978-981-4726-72-6

"Single-user licence. Complimentary for BCSC/TC/WG of TR 52 : 2016 – No reproduction or circulation"

First published, 2017

NOTE

1. *Users of this Technical Reference should refer to the relevant professional or experts for any technical advice on the subject matter. SPRING Singapore shall not be liable for any damages whether directly or indirectly suffered by anyone as a result of reliance on this Technical Reference.*

2. *Compliance with this Technical Reference does not exempt users from legal obligations.*

COPYRIGHT

"Single-user licence. Complimentary for BCSC/TC/WG of TR 52 : 2016 – No reproduction or circulation"

Contents

		Page
Foreword		4
1	Scope	5
2	Normative references	5
3	Definitions	6
4	Description	8
5	Characteristics of materials	8
6	Fire safety requirements	8
7	Quality management	9
8	Design considerations	10
9	Typical design	10
10	Installation, maintenance and warranty	11

Tables

1	Typical properties of fabric ducting materials	9
2	Acceptable fire tests and corresponding acceptance criteria	9

Figures

1	Typical configuration of fabric ducting	8
2	Three common shapes of fabric ducting	10

COPYRIGHT

"Single-user licence. Complimentary for BCSC/TC/WG of TR 52 : 2016 -- No reproduction or circulation"

Foreword

This Technical Reference was prepared by the Working Group appointed by the Technical Committee on Building Maintenance and Management under the direction of the Building and Construction Standards Committee (BCSC). The BCSC endorsed the Technical Reference on 25 October 2016.

The Technical Reference is intended to provide recommendations and guidelines of fabric ducting to engineers, project managers, energy managers and facility managers working for developers, building owners, M&E consultancy firms, ACMV contractor firms, ESCOs and other stakeholders involved in the design, construction and/or management of air-conditioning and mechanical system in the building industry.

This Technical Reference is a provisional standard made available for application over a period of three years. The aim is to use the experience gained to update the Technical Reference so that it can be adopted as a Singapore Standard. Users of the Technical Reference are invited to provide feedback on its technical content, clarity and ease of use. Feedback can be submitted using the form provided in the Technical Reference. At the end of the three years, the Technical Reference will be reviewed, taking into account any feedback or other considerations, to further its development into a Singapore Standard if found suitable.

In preparing this Technical Reference, reference was made to FSR 10:2014, "Fire safety requirements for the use of plastics in building construction".

Attention is drawn to the possibility that some of the elements of this Technical Reference may be the subject of patent rights. SPRING Singapore shall not be held responsible for identifying any or all of such patent rights.

COPYRIGHT

"Single-user licence Complimentary for BCSC/TC/WG of TR 52 : 2016 – No reproduction or circulation"

Technical Reference for fabric ducting air distribution system – Textile based ventilation

1 Scope

The Technical Reference is intended to provide recommendations to developers, consultants and contractors with a set of guidelines for the design and maintenance of fabric ducting for air distribution systems. The guidelines recommend materials and address the issues of flammability, quality management, design and maintenance of fabric ducting.

The Technical Reference covers:

a) Characteristics of materials;

b) Fire safety requirements;

c) Quality management;

d) Design considerations and typical design;

e) Installation, maintenance and warranty.

2 Normative references

The following referenced documents are indispensable for the application of this Technical Reference. For references, the latest edition of the referenced document, including any amendments, applies.

ASTM E648	Standard test method for critical radiant flux of floor-covering systems using a radiant heat energy source
ASTM E662	Standard test method for specific optical density of smoke generated by solid materials
EN 13501 -1	Fire classification of construction products and building elements. Classification using test data from reaction to fire tests
EN 14041	Resilient, textile and laminate floor coverings – Essential characteristics
EN 45545-2	Railway applications. Fire protection on railway vehicles. Requirements for fire behaviour of materials and components
ISO 5659-2	Plastics – Smoke generation – Part 2: Determination of optical density by a single-chamber test
ISO 9001	Quality management systems – Requirements
ISO 9239-1	Reaction to fire tests for floorings – Part 1: Determination of the burning behaviour using a radiant heat source
NFPA 253	Standard method of test for critical radiant flux of floor covering systems using a radiant heat energy source
NFPA 258	Recommended practice for determining smoke generation of solid materials

COPYRIGHT

"Single-user licence. Complimentary for BCSC/TC/WG of TR 52 : 2016 – No reproduction or circulation"

SS 553	Code of practice for air-conditioning and mechanical ventilation in buildings
SS 554	Code of practice for indoor air quality for air-conditioned buildings

3 Definitions

For the purpose of this Singapore Standard, the following definitions apply:

3.1 Air permeability / permeable

The quality or state of being permeable / allowing air to pass through, i.e. Air flow rate per unit area of fabric duct surface ($m^3/h/m^2$) subject to a differential pressure across the fabric duct surface.

3.2 Consultant

Person who provides consultancy services for public sector building and construction projects, categorised by different disciplines and project cost ranges.

3.3 Contractor

Any organisation undertaking works or providing services of any kind for the organisation, and shall include all the subcontractor companies engaged by the main contractor.

3.4 Developer

In relation to any building works, means the person for whom or on whose behalf the building works are carried out.

3.5 Dynamic pressure

Also known as velocity pressure, measured in pascals (Pa), it is related to the mean air velocity and is calculated using the following formula:

Dynamic pressure = $\frac{1}{2} \times \rho \times v^2$

ρ = Air density (kg/m^3)

v = Mean air velocity in the duct cross section (m/s)

3.6 Dynamic ratio

The ratio of static pressure to dynamic pressure. It is calculated using the following formula:

P_s / P_d

P_s = Static pressure

P_d = Dynamic pressure

3.7 Fabric ducting

A duct made of a fabric material used for the transportation and diffusion of air.

COPYRIGHT

"Single-user licence. Complimentary for BCSC/TC/WG of TR 52 : 2016 – No reproduction or circulation"

3.8 Fabric ducting system

A system of ducts made of a fabric material used for the transportation and diffusion of air to improve comfort. It can be used for mechanical ventilation, air conditioning or heating.

3.9 Glass fibre

A light and strong material that is made from thin threads of glass.

3.10 Nozzles

Conical shaped plastic insertions into a fabric duct specifically used for directional air distribution.

3.11 Operating static pressure

The force applied perpendicular to the surface of the fabric duct per unit area over which that force is distributed while the air conditioning or mechanical ventilation equipment connected to that ducting system is switched on.

3.12 Shrinkage

The amount by which something becomes smaller.

3.13 Slots

Linear holes running the length of a fabric duct covered with a mesh-like material to allow air to pass freely.

3.14 Static pressure

The force applied perpendicular to the surface of an object per unit area over which that force is distributed (measured in Pascals: Pa).

3.15 System type

The shape of the fabric ducts used within a fabric ducting system. The three common system types are round, half-round or quarter-round.

3.16 Tensile strength

The greatest longitudinal stress a substance can bear without tearing apart.

3.17 Total pressure

The sum of static and dynamic pressures (measured in Pascals: Pa).

3.18 UV

An abbreviation of ultra violet light.

3.19 Warp

The threads that run up and down on a loom or in a woven fabric.

3.20 Weft

The threads that run from side to side on a loom or in a woven fabric.

COPYRIGHT

"Single-user licence. Complimentary for BCSC/TC/WG of TR 52 : 2016 – No reproduction or circulation"

4 Description

Fabric ducting is an air dispersion system that transfers and distributes air in the space being conditioned. Fabric ducting is constructed from light materials that are typically circular, half-round or quarter-round in shape. The materials used in construction are typically composed of synthetic polymer material.

Typical fabric ducting does not have an internal support structure; positive static pressure from the fan blower is required to keep the shape.

Air will be dispersed from the entire length of the duct through the permeable material, and/or through nozzles or orifices cut into the fabric (see Figure 1).

Due to the lightweight characteristics of these systems, fabric ducts are often easy to install and as the fabric material is used instead of metal, they are not prone to rust or corrosion.

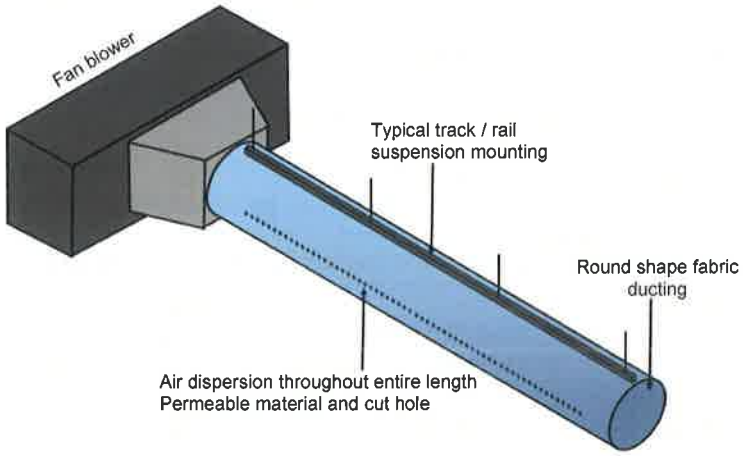

Figure 1 – Typical configuration of fabric ducting

5 Characteristics of materials

The fabric material is the key component of any fabric ducting system. Materials used in fabric ducting vary, and are dependent on manufacturer, country of use and its application. Table 1 describes the typical properties of fabric ducting material.

In general, fibre-glass material should not be used. The material used should be lightweight for ease of installation and should be treated to prevent shrinkage during washing.

6 Fire safety requirements

The material used in fabric ducting systems shall meet the acceptance criteria for any one standard in each test category in Table 2.

COPYRIGHT

"Single-user licence. Complimentary for BCSC/TC/WG of TR 52 : 2016 – No reproduction or circulation"

Table 1 – Typical properties of fabric ducting materials

Characteristic	Value	Unit	Tolerance	Comments
Weight	260	g/m^2	±5%	
Thickness	0.45	mm	±10%	
Tensile strength (warp/weft)	1,400/1,900	N/50mm	±10%	
Elongation (at first break)	30/35	%		
Resistance to tearing (warp/weft)	140/110	N	±10%	
Minimum air permeability	20	$m^3/m^2/h$		Air permeability at 120 Pa
Retention grade	F7			Equivalent filter class
Shrinkage in wash	<5	%		
Water absorption	0.4	%		
Operating temperature maximum/minimum	+60 / -45	°C		

NOTE – This is for reference only, exact properties will depend on the individual manufacturer's data.

Table 2 – Acceptable fire tests and corresponding acceptance criteria

Test category	Fire risk	Applicable fire test standards	Acceptance criteria
A	Toxicity emission	• EN 45545-2	CIT < 0.75
		• ISO 5659-2	CIT < 0.75
B	Smoke density	• EN 13501-1 • EN 14041 • ISO 9239-1	Smoke classification to be *s1* rating.
		• ASTM E662 • NFPA 258	Smoke density, $D_{s,max}$ < 450
		• ISO 5659-2	Smoke density, $D_{s,max}$ < 150
C	Ease of ignition / Fire spread	• EN 13501-1 • EN 14041 • ISO 9239-1	Sprinklered premises • Sleeping occupancy: Class C_{fl} or better • Non-sleeping occupancy: Class D_{fl} or better Unsprinklered premises • Sleeping occupancy: Class B_{fl} or better • Non-sleeping occupancy: Class C_{fl} or better
		• ASTM E648 • NFPA 253	Critical radiant flux (CRF) > 0.45 W/cm^2

7 Quality management

7.1 ISO 9001 certification

It is recommended to use fabric ducting systems supplied by manufacturers that are ISO 9001 certified.

COPYRIGHT

"Single-user licence. Complimentary for BCSC/TC/WG of TR 52 : 2016 – No reproduction or circulation"

ISO 9001 sets out the criteria for a quality management system. This standard is based on a number of quality management principles including a strong customer focus, the motivation and implication of top management, the process approach and continual improvement. Using ISO 9001 helps ensure consistent and good quality products.

7.2 Air permeability quality control

Due to the importance of the fabric's air permeability rating to provide comfort and prevent condensation, the manufacturer should have the ability to test the air permeability of the material used and have a quality control process in place to ensure strict adherence to the air permeability rating given.

8 Design considerations

This Technical Reference (TR) shall be used in conjunction with the SS 553, which provides guidance for the design, construction, installation testing and commissioning, operation and maintenance of air conditioning and mechanical ventilation systems in all commercial, office and institutional buildings and SS 554, which provides guidance for indoor air quality for air-conditioned buildings.

Although the location of a fabric ducting installation may vary depending on site conditions, due to the fact that air leaves the system throughout the length of the duct, fabric ducts are recommended to install within the intended occupant space.

Fabric ducts can be used to transfer and distribute air from a wide range of temperatures (60 °C/-45 °C) and are often used in mechanical ventilation applications as well as cooling and/or heating applications.

Design and operation of fabric ducting systems shall comply with the requirements of the code of practice for fire precautions in buildings.

In design, typical operating static pressure of 75 to 250Pa should be considered to ensure proper airflow performance. Operating the fabric ducting outside the recommended static pressure can result in Fabric fluttering, excessive noise, premature material failure and poor air distribution.

Permeable materials for the fabric ducting are strongly recommended in humid environments to prevent condensation on the fabric ducting surface.

9 Typical design

9.1 Typical shape of fabric ducting

Fabric ducts come in three common shapes: full round, half-round and quarter-round, as shown in Figure 2.

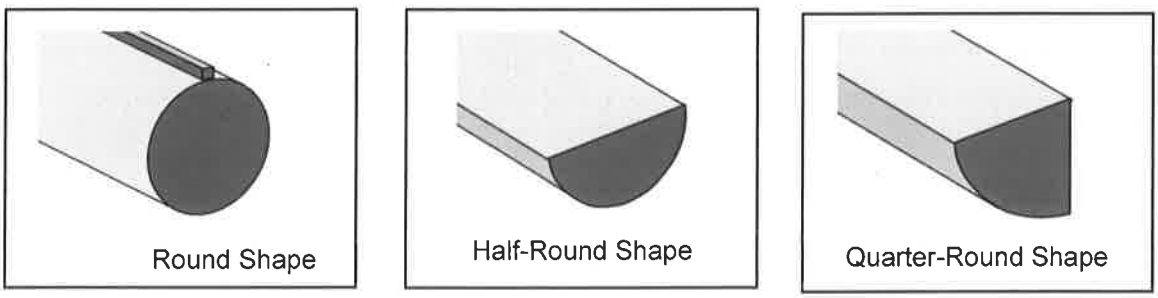

Figure 2 – Three common shapes of fabric ducting

COPYRIGHT

"Single-user licence. Complimentary for BCSC/TC/WG of TR 52 : 2016 – No reproduction or circulation"

9.2 Mode of air distribution

Air may be distributed through any of the following means:

a) Through the fabric (air permeability),

b) cut holes,

c) long throw nozzles, and

d) slots (for air curtain applications).

Holes, long throw nozzles and slots can be positioned around the surface of the fabric duct to direct the air according to the user requirements.

9.3 Sizing

Fabric ducts can come in a wide range of sizes and lengths, with a recommended cross-sectional diameter not exceeding 1,800 mm.

The size of the fabric duct is calculated by the volume of air being transferred to the space with an airflow velocity through the fabric duct. The recommended internal air velocity shall be between 5 m/s to 8 m/s.

10 Installation, maintenance and warranty

10.1 Installation and maintenance considerations

The fabric ducting shall not be located where it may be subjected to damage or rupture.

The fabric ducting shall not be located where it may be exposed to direct UV light or naked flames.

Suspension and mounting for the fabric ducting is typically constructed with supports or suspension by design. Track/rail system and cable system are common suspension types used. These systems give the flexibility of mounting the fabric ducts with one, two, or three anchor points.

Regular and proper maintenance of the fabric ducting is necessary to ensure efficient operation and sustain long usable life.

Provision for washing the fabric ducting according to the manufacturer's maintenance instructions shall be made if necessary.

10.2 Shrinkage guarantee

It is recommended that the material used in fabric ducting systems should be pre-treated to minimise shrinkage once the fabric ducts are installed, as they may be washed in accordance with manufacturer's guidelines.

COPYRIGHT

"Single-user licence. Complimentary for BCSC/TC/WG of TR 52 : 2016 – No reproduction or circulation"

Feedback Form

To : SPRING Singapore
1 Fusionopolis Walk
#01-02 South Tower, Solaris
Singapore 138628

E-mail : standards@spring.gov.sg

Technical Reference for fabric ducting air distribution system – Textile based ventilation

Specific: (Please use the format below)

S/No	Clause no. in the Technical Reference	Comments (To be supported with reasons)	Proposed changes

General: _____

_____

_____

Submitted by : Name (Spelt in full) : _____
Company : _____
Designation : _____
Postal address : _____
Tel no. : _____
E-mail : _____

COPYRIGHT

"Single-user licence. Complimentary for BCSC/TC/WG of TR 52 : 2016 – No reproduction or circulation"

ABOUT SPRING SINGAPORE

SPRING Singapore is an agency under the Ministry of Trade and Industry responsible for helping Singapore enterprises grow and building trust in Singapore products and services. As the national standards and accreditation body, SPRING develops and promotes an internationally-recognised standards and quality assurance infrastructure. SPRING also oversees the safety of general consumer goods in Singapore. As the enterprise development agency, SPRING works with partners to help enterprises in financing, capability and management development, technology and innovation, and access to markets.

SPRING Singapore
1 Fusionopolis Walk
#01-02 South Tower, Solaris
Singapore 138628
Tel: 6278 6666
Fax: 6278 6667
E-mail: smeinfoline@spring.gov.sg
Website: http://www.spring.gov.sg

ABOUT THE NATIONAL STANDARDISATION PROGRAMME

Under the national standardisation programme, SPRING Singapore helps companies and industry to meet international standards and conformity requirements by creating awareness of the importance of standardisation to enhance competitiveness and improve productivity, co-ordinating the development and use of Singapore Standards and setting up an information infrastructure to educate companies and industry on the latest developments.

SPRING Singapore is vested with the authority to appoint a Standards Council to advise on the preparation, publication and promulgation of Singapore Standards and Technical References and their implementation.

Singapore Standards are in the form of specifications for materials and products, codes of practice, methods of test, nomenclature, services, etc. The respective committee or working group will draw up the standards before seeking final approval from the Standards Council or the relevant Standards Committee. To ensure adequate representation of all viewpoints in the preparation of Singapore Standards, all committees appointed consist of representatives from various interest groups which include government agencies, professional bodies, tertiary institutions and consumer, trade and manufacturing organisations.

Technical References are transition documents developed to help meet urgent industry demand for specifications or requirements on a particular product, process or service in an area where there is an absence of reference standards. Unlike Singapore Standards, they are issued for comments over a period of three years before assessment on their suitability for approval as Singapore Standards. All comments are considered when a technical reference is reviewed at the end of three years to determine the feasibility of its transition to a Singapore Standard. Technical References can therefore become Singapore Standards after three years, continue as Technical References for further comments or be withdrawn.

In the international arena, SPRING Singapore represents Singapore in the International Organization for Standardization (ISO), the Asia-Pacific Economic Co-operation (APEC) Sub-committee for Standards and Conformance (SCSC) and in the ASEAN Consultative Committee on Standards and Quality (ACCSQ). The Singapore National Committee of the International Electrotechnical Commission which is supported by SPRING Singapore, represents Singapore in the IEC.

COPYRIGHT

"Single-user licence. Complimentary for BCSC/TC/WG of TR 52 - 2016 - No reproduction or circulation"

The Singapore Standardisation Programme is managed by

SPRING Singapore
1 Fusionopolis Walk
#01-02 South Tower, Solaris
Singapore 138628

Tel : +65 6278 6666
Fax : +65 6278 6667
www.spring.gov.sg

