MITSUBISHI HEAVY INDUSTRIES, LTD.

AIR CONDITIONERS

HEAVY DUTY

Our Technologies, Your Tomorrow



Eco·lution

more efficient, more sophisticated

Industry leading energy efficiency and high reliability from our high technology.



Diamond Series

SRK ZMX

Wall Mounted type

NEW



Remote control

The industry's highest levels

SEER 7.60

(SRK25ZMX-S in the cooling mode)

3D AUTO
Programmed air distribution

Sophisticated design

Quiet operation

MITSUBISHI
HEAVY INDUSTRIES, LTD.

Industry leading energy efficiency and high reliability from our advanced technology.



Our latest technologies

Applied models
All inverter models

New propeller fan

Matching a new propeller fan with a fan motor has been optimized in order to keep the same capacity as that of previous models with less electrical consumption. Synergy effect with leaf shape grill has realized improvement of energy efficiency by 5% and decrease of sound level.(SRC40/50/60ZIX-S)

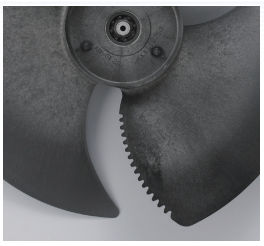

Serration fan

Silicon-coated PCB

The printed wiring board of the outdoor unit is coated by silicon. It lasts long having a tolerance for humidity.

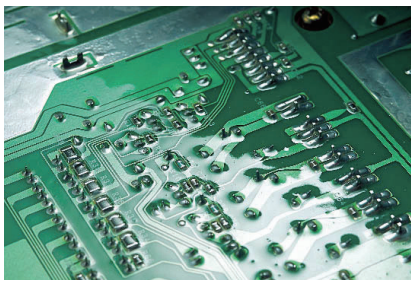

Energy saving leaf shape grill

Radial shape grill has been developed in order to realize natural air flow sent by propeller fan along with it. Airflow is very smooth with minimum air resistance and it can make decrease motor load and lead to improvement of energy efficiency.

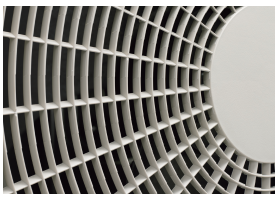

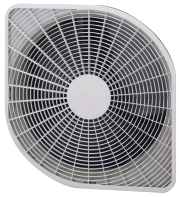

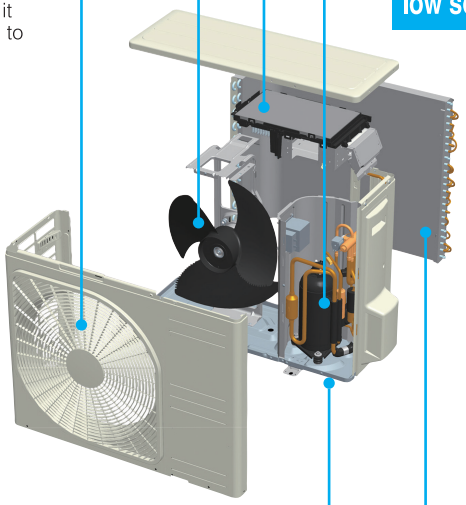

High efficiency scroll compressor Realizing low vibration and low sound revel

Thanks to applying scroll compressor, improvement of energy efficiency has been realized with lower vibration and lower sound level. Furthermore high efficiency and high output has realized by use of neodymium magnet applied in the motor. The magnet produces huge neodymium energy, reducing loss occurred during compression of refrigeration.(SRC40/50/60ZIX-S)



photo is composite image

Superior corrosion resistance hot dipping steel sheet

Superior corrosion resistance hot dipping steel sheet is applied at base of outdoor units.
It has superior corrosion resistance and scratch resistance properties compared to conventional materials.

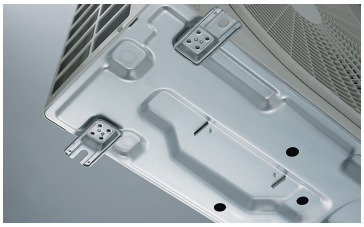

Indoor unit

Optimization of combination of fin configuration and copper tube has achieved maximum air flow keeping size in width of indoor unit. Efficiency rate of heat exchanger has been drastically improved by 33% compared with previous models. New fin can realize maximum air flow and saving energy simultaneously.
(except SRK-ZJP)

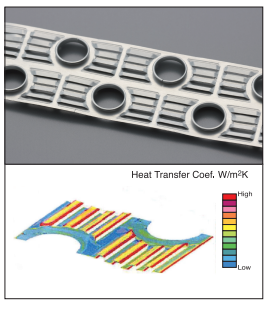

Outdoor unit

Thanks to changing fin configuration from flat sheet to new M shape fin, efficiency has been improved by 10%. Optimum balance of heat transfer and air flow has been achieved in a high-dimensional structure.

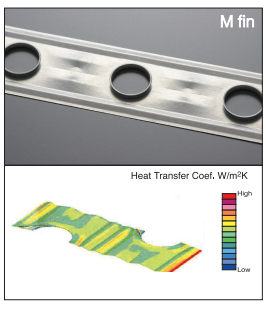

Applied models
All SRK

Anti-microbial specifications and design will deliver cleanliness and safety

Anti-microbial fan

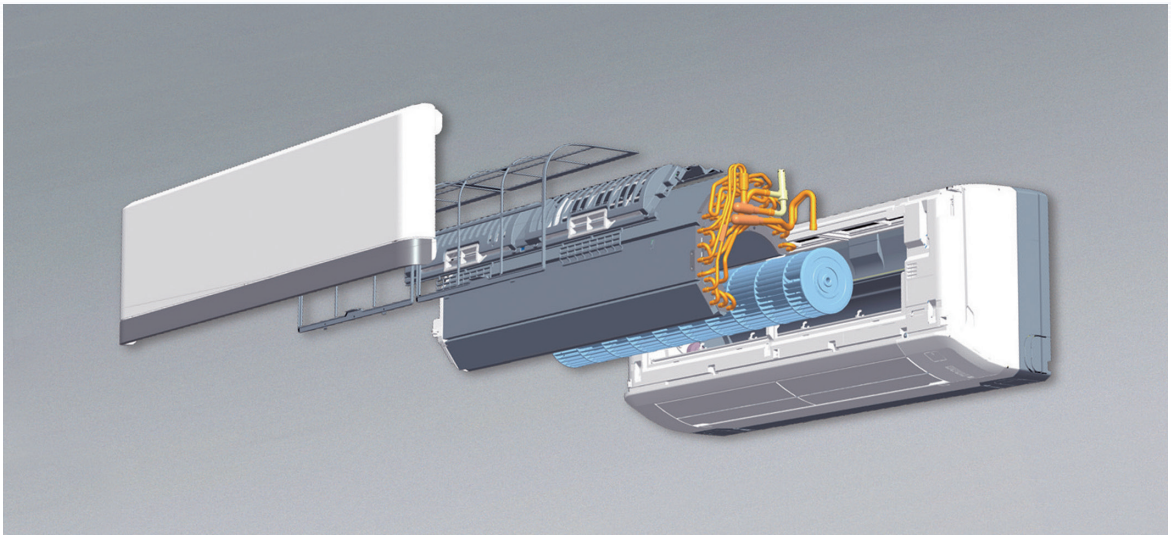

The fan has undergone anti-microbial treatment to resist mold and germs, making the system clean and safe. Foul odors and molds, etc. which can occur when an air conditioning system is not in operation are prevented.



Comparison of growth of bacteria and mold on fan surfaces (microscopic image)

- Intestinal bacteria (Escherichia coli IFO 3972)
- Staphylococcus aureus subsp. aureus IFO 12732

  Testing Authority: Japan Food Analysis Center
  Test Results Issued: 2004-4-7.
  Test Report No.: 104034022-001
  Tests were conducted with reference to the antimicrobial strength tests in JIS Z 2801 2000 "Antimicrobial Products-Antimicrobial Test Method" –5.2 Antimicrobial Effects: Test Methods for Plastic Products, etc.
- Apergillus niger IFO 6341

  Testing Authority: Japan Food Analysis Center
  Test Results Issued: 2004-4-23.
  Test Report No.: 104034022-002
  Tests were conducted with reference to the antimicrobial strength tests in JIS Z 2801 2000 "Antimicrobial Products-Antimicrobial Test Method" –5.2 Antimicrobial Effects: Test Methods for Plastic Products, etc.

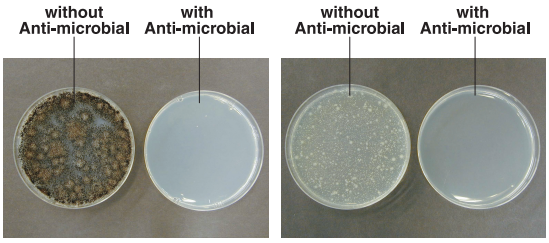

Aspergillus niger IFO 6341 **Escherichia coli IFO 3972**

In tests conducted at the Mitsubishi Heavy Industries Nagoya Research Lab, 24 hrs after contact with bacteria, cultured on agar media.

Live Bacteria Count on Measured Test Pieces

Tested Contaminant	Measurement	Test Pieces	Bacteria Count Per Test Piece		
			Measurement 1	Measurement 2	Measurement 3
Escherichia coli IFO 3972 coli	Immediately after contact	Not treated	1.9×10^5	1.6×10^5	1.3×10^5
	After 24 hrs at 35°C	Test piece 1	<10	<10	<10
		Not treated	3.8×10^6	4.9×10^6	7.2×10^6
Staphylococcus aureus	Immediately after contact	Not treated	1.4×10^5	1.6×10^5	1.3×10^5
	After 24 hrs at 35°C	Test piece 1	<10	<10	<10
		Not treated	8.6×10^5	4.5×10^5	3.6×10^5
Aspergillus niger	Immediately after contact	Not treated	1.5×10^4	2.2×10^4	1.6×10^4
	After 24 hrs at 35°C	Test piece 1	<10	<10	<10
		Not treated	1.0×10^4	1.2×10^4	2.5×10^4

Test Pieces 1) Products with Antimicrobial and Antifungal Treatment

3D AUTO Vertical + Horizontal AIR SCROLL

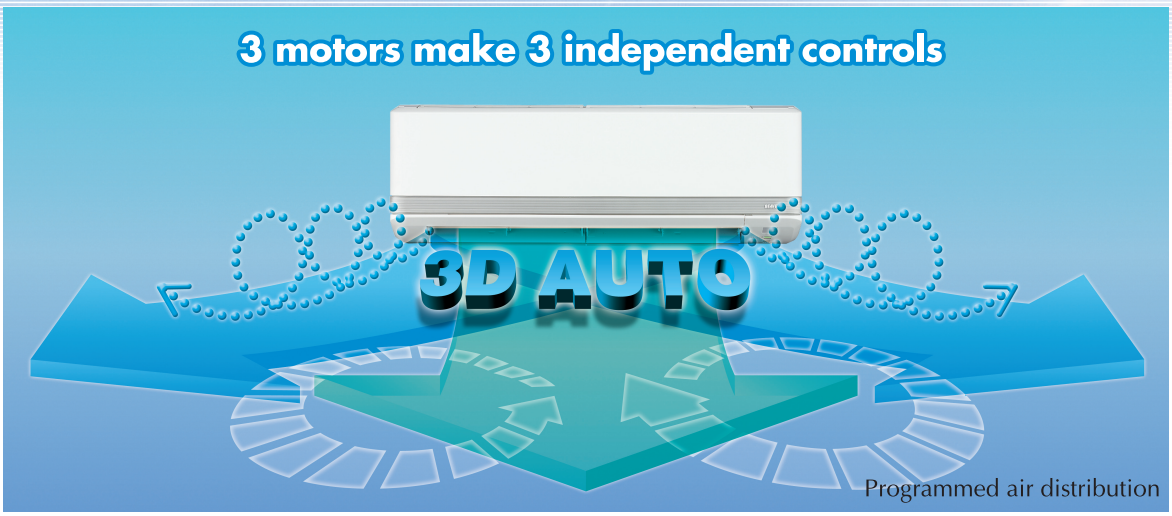

Applied models
SRK-ZMX, SRK-ZMA,
SRK-ZM
Manual Setting only

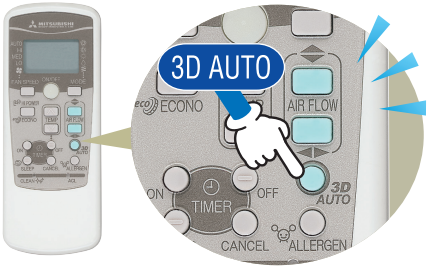

3D AUTO is one touch programmed and three motors (one vertical working motor + two horizontal working motors) make three independent air flow controls.
The uniform and quiet airflow can be delivered to every corner of the room, achieving economical operation and minimizing energy loss.

Programmed 3D AUTO

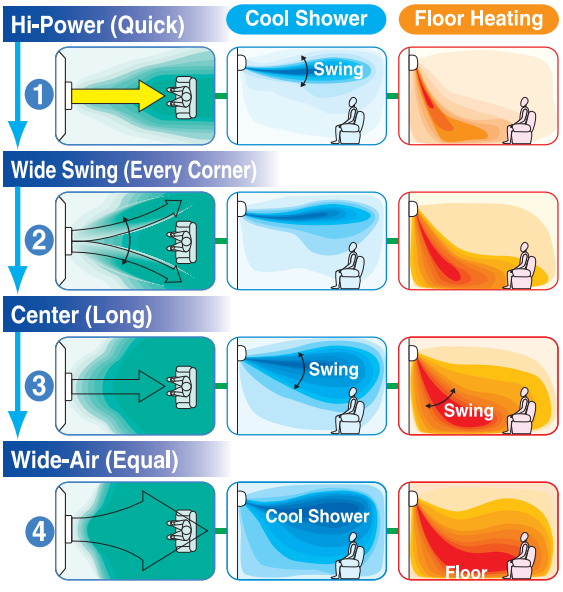

Thanks to automatic control of air flow volume and air flow direction, comfortable air conditioning of the entire room can be done effectively.
The cooled air flows directly to the ceiling in cooling operation mode, not directly at the occupants of the room. Comfort cooled air flow comes via the ceiling like a cool breeze.
In the heating mode, warm air flow can be sent down to the floor directly. The warm air then spread along the floor achieving optimum comfort.

Manual Setting

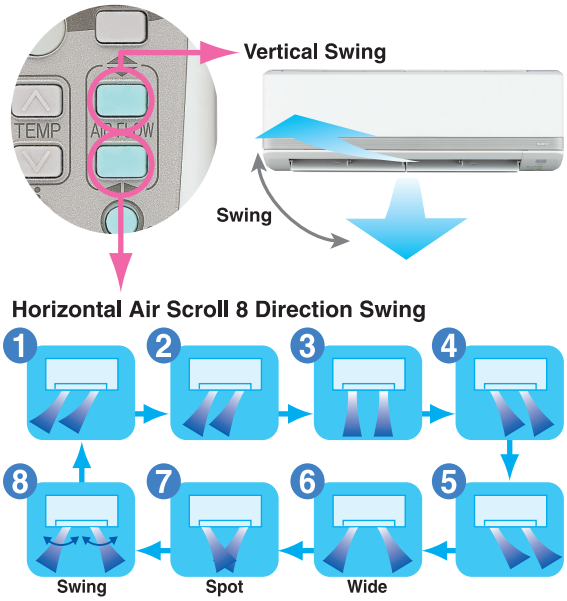

The airflow direction from the right and left louvers can be controlled individually. Eight different air flow patterns can be selected.

Aircraft technology was used in the design of the air conditioner's airflow system

Jet Air Scroll Long Reach & Silent Air Flow

Applied models
All SRK

We used the same aerodynamic analysis technology as used in developing jet engines.

CFD (computational fluid dynamics), used in blade shape design of jet engines, has been applied to the design of air channels in air conditioners to develop the ideal air channel system (air circulation). The jet air stream generated by this air channel system can bring large volume air without consuming much power. While at the same time, it delivers a uniform gentle breeze to every corner of the room.



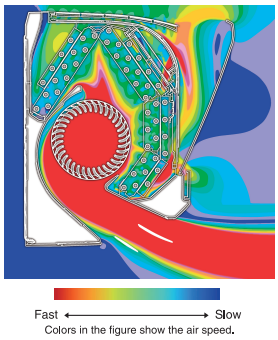

Long Reach Air Flow

Powerful airflow is realized by Jet technology.Good for large living rooms and shops. Increase your comfort.

Applied models
SRK60ZJX,
SRK-ZK,



Installation Positioning

The air flow direction can be set to suit your room's configuration.

Applied models
SRK60ZMX, SRK-ZMA

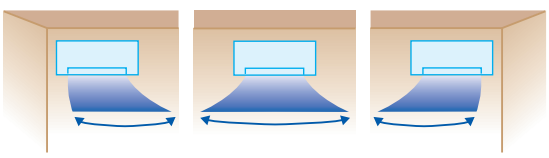



Clean Air



Applied models
SRK-ZMX, SRK-ZMA

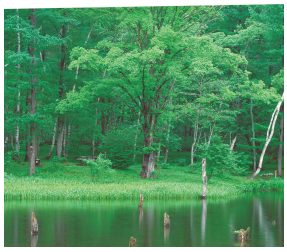

Generates the same amount of negative ions as a forest environment

24-hour ION

The air conditioner main body employs a tourmaline-coated sheet. The sheet generates negative ions around the clock. Even when the air conditioner is not running, it generates as many negative ions (2,500– 3,000/cc) as in a forest, stream or fall does, allowing you to experience them without incurring any electrical charges.

Applied models
SRK-ZMX, SRK-ZM,
SRK-ZMA

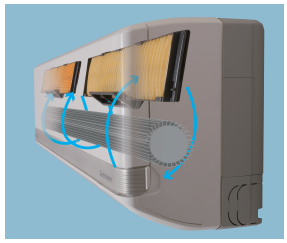

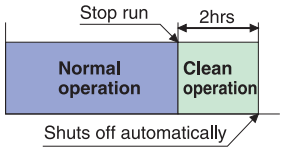

Always keeping the indoor unit clean

Self Clean Operation

"Self clean operation" is operated for 2 hours after the unit has stopped its normal operation.
The indoor unit is dried up and the growth of mold is restrained. Users can select whether this mode is utilized or not.

Situation of mold after one week

When you don't execute "Self Clean Operation"
Fungal mycelia expand.

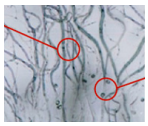

When you execute "Self Clean Operation"
The spore of mold doesn't germinate.

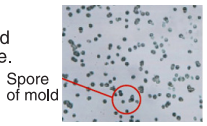

Applied models
SRK-ZMX, SRK-ZM,
SRK-ZMA



Push ALLERGEN Mode

The air in your room is kept fresh

Allergen Clear System

"Allergen clear system" is equipped to suppress the influence of the allergen caught by the filter by controlling the temperature and humidity.

In case of Multi-split system, Allergen Clear System is not available.
If [Allergen] button is pushed by mistake, the indoor unit will stop.

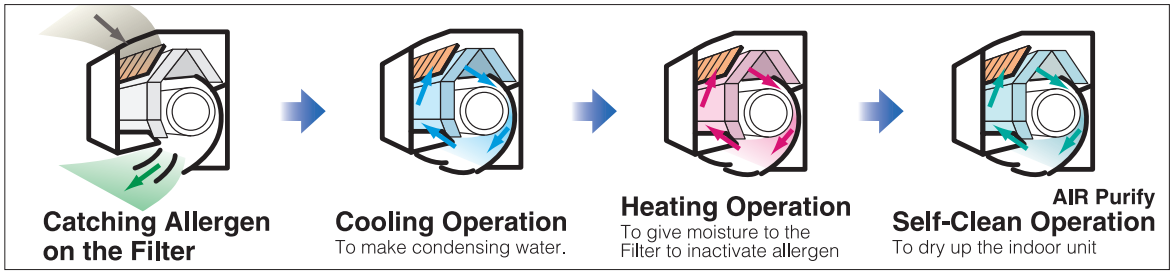

This is the original and only technology to control the temperature and humidity for inactivating allergens

Allergen Clear Filter

Enzyme + Urea deactivates allergens and kills bacteria.



The allergen clear filter breaks down the pollen, lice, and allergens that live on cat skins, etc. and deactivates them. The secret of deactivation is the Enzyme-urea compound. It deactivates not only allergens but also all kinds of bacteria, molds and viruses. Even if allergens and bacteria, etc. fly off of the filter, they are deactivated, so the air in your room is kept fresh.

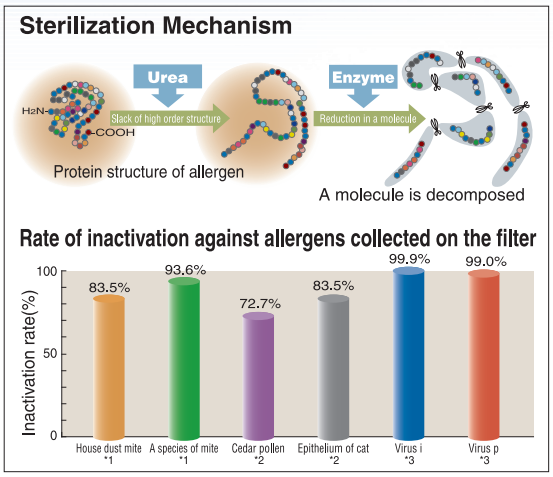

*1 Test method:
ELISA colorimetric method / ELISA fluorescent method
Laboratory:
Independent administrative agency national hospital mechanism Sagamihara Hospital, No.1536
*2 Test method:
ELISA colorimetric method
Laboratory:
Independent administrative agency national hospital mechanism Sagamihara Hospital, No.1536
*3 Test method:
TCID (Infection value 50%)
Laboratory:
Foundation of Kitazato Environmental Science Center, No.15-0145

Sure to destroy fungi and bacteria, also effective on viruses and allergenic compounds (Cat hair, dust mite, pollen etc.)

Natural Enzyme Filter

The first release in this range of the enzyme-sterilizing filter



Enzymes used in these filters are naturally occurring lytic enzymes.
The lytic enzymes attack cell walls of microorganisms trapped on a filter and destroy them and doing so, have a powerful sterilizing which will effect decrease the number of molds and bacteria Natural Enzyme Filter will clean and sanitize air passing through it to keep air in the room clean and safe.

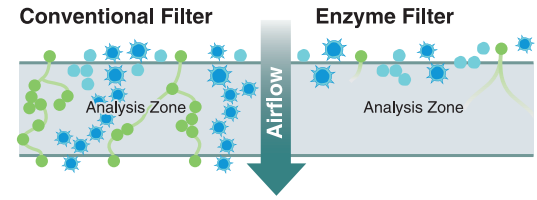

Enzyme's sterilizing mechanism

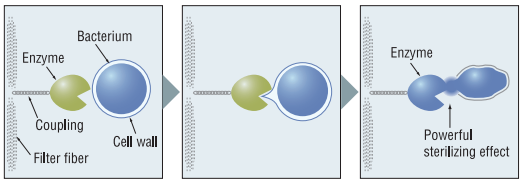

The deodorizing ability of this filter can be easily restored simply by cleaning and exposing to the sunlight

Photocatalytic Washable Deodorizing Filter

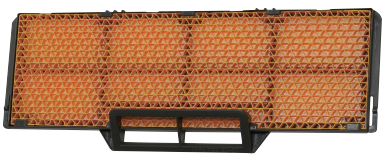

It will keep the air fresh by deodorizing the molecules causing odor. Its deodorizing power can be restored by washing with water and drying under the sun, as such it is a Recycling deodorizing filter capable of repeat use.

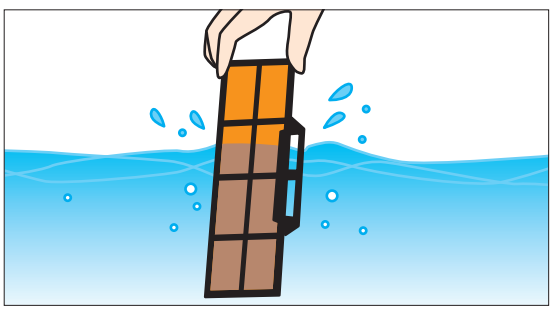

Product Range

DC Inverter Multi Split	Type	Energy Labeling	Indoor Units To Be Combined
SCM45ZJ-S 2 Indoor Unit  Refer Page 15	R410A		SRK25/35/50ZMA-S  Refer Page 16
SCM60ZJ-S1 3 Indoor Unit  Refer Page 15	R410A	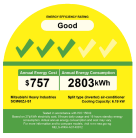	SRK60ZMX-S  Refer Page 17
SCM80ZJ-S1 4 Indoor Unit  Refer Page 15	R410A	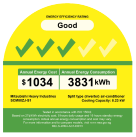	SRK71ZM-S  Refer Page 13
SCM100ZJ-S1 5 Indoor Unit **SCM125ZJ-S1** 6 Indoor Unit  Refer Page 15	R410A R410A	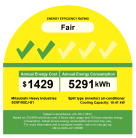 	FDTC35VF  FDTC50VF  FDTC60VF  Refer Page 20 SRR35ZJ-S  SRR50ZJ-S  SRR60ZJ-S  Refer Page 19

Product Range

DC Inverter Single Split	Type	Energy Labeling	Indoor Units To Be Combined
SRC10YL-S **SRC13YL-S**  Refer Page 14		 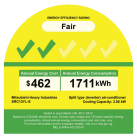	SRK10/13YL-S  Refer Page 14
SRC18YL-S  Refer Page 14		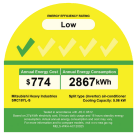	SRK18YL-S  Refer Page 14
SRC71ZM-S  Refer Page 13			SRK71ZM-S  Refer Page 13

Note: Due to the compact high efficient design of heat exchanger, the use of wall mounted fan coil units are not recommended for hair saloon environment. Please contact our Dealers for Recommendations of appropriate model.

Functions

Clean Operation / Filter

Allergen Clear System
The system is equipped to suppress the influence of the allergen caught by the filter by controlled the temperature and humidity.

Self Clean Operation
The operation is operated for 2 hours after the unit has stopped its normal operation. The indoor unit is dried up and growth of mold is restrained.

Allergen Clear Filter
The filter breaks down the pollen, lice, and all allergens that live on cat skins, etc. and deactivates them.

Photocatalytic Washable Deodorizing Filter
It keeps air fresh by deodorizing the molecules causing odor. The deodorizing ability can be easily restored simply by cleaning and exposing to the sunlight.

Natural Enzyme Filter
Enzymes used in the filter are naturally occurring lytic enzymes which attack cell walls of microorganisms trapped on the filter and destroy them.

Comfortable Functions

Fuzzy Auto Mode
Automatically, the unit determines its operating mode and temperature setting based on a fuzzy calculation, and adjusts the inverter frequency.

Automatic Operation
The air conditioner automatically selects from among heating, cooling and dry operations.

"HI POWER" Operation
The unit can operate continuously in "HI POWER" mode for 15 minutes. This mode is convenient to reach the desired temperature quickly.

Three "Hot" System
This series offers three "hot" systems. "Hot start" allows the unit to begin operating immediately, while the "hot spurt" fast-heating system works to increase the temperature setting by two degrees. The "hot keep" system is used during automatic defrosting or to prevent the influx of cool air. These three operational control systems help ensure comfortable and efficient heating.

Comfortable Air Flow Functions

3D Auto
You can choose the best cooling or heating pattern by only pushing one button.

Auto Flap Mode
Whatever the operating mode is, the unit automatically selects the optimal angle.



Memory Flap
While the flap is swinging, it can be stopped at any angle desired. The flap returns to the position that it was in when operation last stopped.

Air Scroll
The swing of the flap causes the air flow to spiral as it reaches the floor, and breeze reaches all of a room.

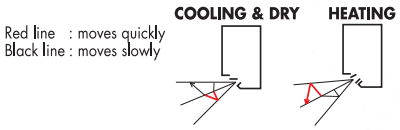

Positioning of Installation
You can set the left-right air flow directions when you installed the air conditioner near the side wall by remote controller operation.

Up/Down Flap Swing
Flap moves up and down continuously. The Up/Down flap swing can be fixed at the preferred operation angle.

Right/Left Louver swing
Louver moves right and left continuously. The Right/Left louver swing can be fixed at the preferred operation angle.

Air Outlet Selection
Both lower and upper air outlets and upper air outlet can be selected.

Convenience & Economy Functions

On Timer
This facility enables the operation to start a little earlier, so that the room approaches optimum temperature at ON time when the operation is started by ON-TIMER. Thus it will try to be at the temperature you want, when you want.

Economy Mode
The unit realizes effective energy saving operation, while still keeping a comfortable cooling and heating condition.

Dry Operation
The unit dehumidifies the room by intermittent cooling operation.

24-hour On/Off Programmable Timer
By combining a start timer with a stop timer, you can register two timer operations a day. Once set, timers will faithfully start or stop the system at a specified time of the day repeatedly.

Off Timer
The unit stops automatically at the set time.

Sleep Mode
The room temperature is automatically controlled during the set sleep mode period, ensuring that room temperature will not get too cold or too hot.

Maintenance & Prevention Functions

Microcomputer-Operated Defrosting
This mode automatically eliminates frost, and helps minimize excessive operation in other modes.

Self-Diagnostic Function
In the case that the air conditioner malfunctions, an internal microcomputer automatically runs a self-diagnosis. (Inspection and repair should be performed by authorized dealers.)

Detachable Indoor Air Inlet Panel
The air inlet panel on the indoor unit opens and closes easily, making filter cleaning simple. The suction panel can also be removed.

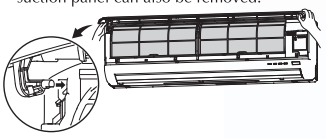

When removing the air inlet panel for internal cleaning or others, open the grill by 65 degrees and then pull it to this side.

Others

Back-up Switch
On the main unit,there is a backup on/off switch, which is useful when you can't use remote control, or batteries are flat.

Auto Restart Function
Power blackout auto restart function is a function that records the operational status of the air-conditioner immediately prior to it being switched off by a power cut, and then automatically resumes operations at that point after the power has been restored.

24-hour ION
Tourmaline-coated sheet generates negative ions around the clock. Even when the air conditioner is not running, it generates as many negative ions as a forest, stream or fall does, allowing you to experience them without incurring any electricity charges.

Luminous Button
With wireless “Luminous” remote controls that even “glow in the dark”, it is possible to operate all desired functions of the unit with the click of a button.

INVERTER SINGLE SPLIT PREMIUM <COOLING>

ZM SERIES

Inverter SUPER HIGH EER



SRK71ZM-S



NEW

Single Multi SRK71ZM-S can be selected for use as indoor units in the combination with SCM Multi system outdoor unit.



SRC71ZM-S

Functions

Allergen Filter, SOLAR Filter, Anti Micro Bial Fan

Comfortable Functions

Fuzzy, Auto, HI POWER

Comfortable Air Flow Functions

3D AUTO, Auto Flap, Memory, UP/DOWN, Lateral Swing, Positioning of installation

Convenient & Economy Functions

Economy, DRY, OFF Timer, Sleep, On 24h Timer Off, On Timer

Maintenance & Prevention Functions

MC, Self Diagnostic, Detachable

Others

Back-up Switch, Auto Restart, 24h-ION, Luminous

Specifications

Model / Item	Indoor unit / Outdoor unit		ZM series SRK71ZM-S SRC71ZM-S
Power Source			1Phase, 220/230/240V: 50Hz
Capacity	Cooling	kW	7.10
		BTU/h	24300
Input	Cooling	kW	2.16 (0.54-2.80)
EER	in Cooling	BTU/hW	3.29
Current	Cooling	A	9.7
Exterior dimensions (H × W × D)	Indoor unit	mm	318 × 1098 × 248
	Outdoor unit	mm	750 × 880 (+88) × 340
Net weight	Indoor unit	kg	16
	Outdoor unit	kg	57
Air Flow (Cooling)	Indoor unit	m^3/min	19.5 (Hi)
	Outdoor unit	m^3/min	55.0
Refrigerant			R410A
Refrigerant piping	Liquid line	mm	Ø6.35 (1/4")
	Gas line	mm	Ø15.88 (5/8")
Connecting wiring			1.5mm^2 × 4cores (Including earth cable)
Connecting method			Terminal block (Screw fixing type)

R410A

DELUXE <COOLING>
YL SERIES

Inverter

NEW



SRK10YL-S, SRK13YL-S, SRK18YL-S







SRC10YL-S, SRC13YL-S



SRC18YL-S

Refrigerant Pipe Length

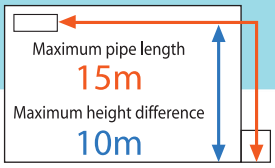

SRK10YL-S
SRK13YL-S
SRK18YL-S

Functions



Comfortable Functions



Comfortable Air Flow Functions

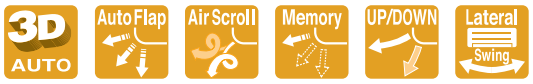

Convenient & Economy Functions



Maintenance & Prevention Functions



Others



Specifications

Item \ Model			YL series		
	Indoor unit		SRK10YL-S	SRK13YL-S	SRK18YL-S
	Outdoor unit		SRC10YL-S	SRC13YL-S	SRC18YL-S
Power Source			1 Phase, 220/230/240V : 50Hz, 220V : 60 Hz		
Capacity		kW	2.50	3.50	5.00
		BTU/h	8530	12000	17060
Input		kW	0.67	0.98	1.56
EER		BTU/hW	12.7	12.2	10.9
Current		A	3.3	4.5	7.1
Exterior dimensions (H × W × D)	Indoor unit	mm	268 × 790 × 224		
	Outdoor unit	mm	540 × 780 (+62) × 290		595 × 780 (+62) × 290
Net weight	Indoor unit	kg	8.5		9.5
	Outdoor unit	kg	29	32	35
Air Flow	Indoor unit	m^3/min	8.0	10.0	12.0
	Outdoor unit	m^3/min	29.5	27.8	37.7
Refrigerant		kW	R410A		
Refrigerant piping	Liquid line	mm	Ø6.35 (1/4")		
	Gas line	mm	Ø9.52 (3/8")	Ø9.52 (3/8")	Ø12.7 (1/2")
Connecting wiring			1.5mm^2 × 4cores (Including earth cable)		
Connecting method			Terminal block (Screw fixing type)		

Inverter Multi-split System

The multi-split system allows a single outdoor unit to service a range of configurations of up to four indoor unit ---- from a lineup of 6 units ranging from 6.0kW to 13.5kW.



ZMX, ZM, ZMA
Wall mounted type **SRK**



Ceiling Concealed type **SRR**



4way ceiling cassette type **FDTC**







600 x 600
Super Compact type

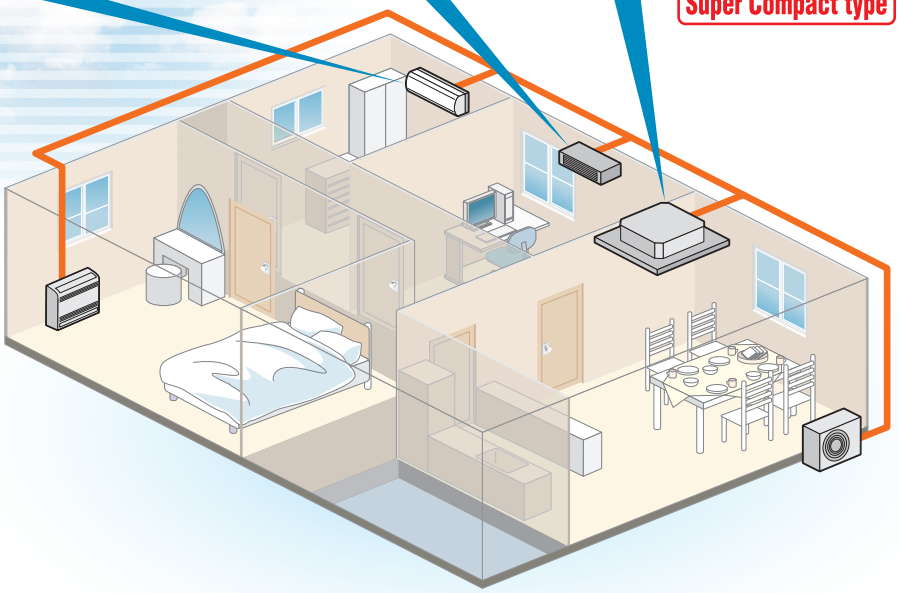

OUTDOOR UNIT





SCM45ZJ-S
SCM60ZJ-S1



SCM80ZJ-S1



SCM125ZJ-S1



SCM100ZJ-S1

Multi System INDOOR UNIT

R410A

Premium Series

SRK-ZMA-S



Wall mounted type



SRK25ZMA-S, SRK35ZMA-S, SRK50ZMA-S

FUNCTION

Self Clean Operation | Allergen Filter | SUN Filter

Comfortable Functions

Fuzzy | Auto | HI POWER

Comfortable Air Flow Functions

3D Auto | Auto Flap | Memory | UP/DOWN | Lateral Swing | Positioning of installation

Convenient & Economy Functions

Economy | DRY | OFF Timer | Sleep | On 24h Timer Off | On Timer

Maintenance & Prevention Functions

MC | Self Diagnostic | Detachable

Others

Back-up Switch | Auto Restart | Luminous | 24H ION

SPECIFICATIONS

Item		Model		SRK25ZMA-S	SRK35ZMA-S	SRK50ZMA-S
Cooling capacity		ISO-T1(JIS)	kW	2.5	3.5	5.0
Heating capacity		ISO-T1(JIS)	kW	3.4	4.5	5.8
Sound pressure level *		Cooling	dB(A)	Hi:34 Me:28 Lo:21	Hi:42 Me:32 Lo:22	Hi:46 Me:37 Lo:26
Air flow	Indoor	Cooling	CMM	Hi:7.9 Me:6.0 Lo:5.0	Hi:10.1 Me:6.4 Lo:5.0	Hi:11.3 Me:7.8 Lo:5.3
Exterior dimensions (H×W×D)			mm	294×798×229		
Net weight			kg	9.5		
Clean filter				Allergen Clear Filter × 1, Photocatalytic Washable Deodorizing Filter × 1		
Piping		Liquid line	mm(in)	ϕ 6.35(1/4")		
		Gas line	mm(in)	ϕ9.52(3/8")		ϕ12.7(1/2")
OUTDOOR UNITS TO BE COMBINED				SCM45,60,80,100,125ZJ-S		SCM60,80,100,125ZJ-S

The data are measured under the following conditions(ISO-T1). Cooling: Indoor temp. of 27CDB, 19CWB, and outdoor temp. of 35CDB. Heating: Indoor temp. of 20CDB, and outdoor temp. of 7CDB, 6CWB.
* Indicates the value in an anechoic chamber.During operation these values are somewhat higher due to ambient conditions.

Multi System INDOOR UNIT

R410A

Diamond Series

SRK-ZMXS

Wall Mounted type





Standard equipment

SRK60ZMX-S

FUNCTION

Self Clean Operation | Allergen Filter | SUN Filter

Comfortable Functions: Fuzzy | Auto | HI POWER

Comfortable Air Flow Functions: 3D Auto | Auto Flap | Memory | UP/DOWN | Lateral Swing | Positioning of installation

Convenient & Economy Functions: Economy | DRY | OFF Timer | Sleep | On 24h Timer Off | On Timer

Maintenance & Prevention Functions: MC | Self Diagnostic | Detachable

Others: Back-up Switch | Auto Restart | 24h-ION | Luminous

SPECIFICATIONS

Item		Model	SRK60ZMX-S
Nominal cooling capacity	ISO-T1(JIS)	kW	6.0
Sound power level *	Cooling	dB(A)	62
Sound pressure level *	Cooling	dB(A)	Hi:51 Me:41 Lo:29
Air flow	Cooling	CMM	Hi:14.5 Me:12.5 Lo:8.5
Exterior dimensions (H×W×D)		mm	309×890×220
Net weight		kg	15
Clean filter			Allergen Clear Filter × 1, Photocatalytic Washable Deodorizing Filter × 1
Piping	Liquid line	mm(in)	ϕ6.35(1/4")
	Gas line	mm(in)	ϕ12.7(1/2")

The data are measured under the following conditions(ISO-T1). Cooling: Indoor temp. of 27CDB, 19CWB, and outdoor temp. of 35CDB. Heating: Indoor temp. of 20CDB, and outdoor temp. of 7CDB, 6CWB.
* Indicates the value in an anechoic chamber.During operation these values are somewhat higher due to ambient conditions.

Multi System INDOOR UNIT

R410A

Diamond Series

SRK-ZMS

Wall Mounted type



SRK71ZM-S



Standard equipment

FUNCTION

Self Clean Operation | Allergen Filter | SUN Filter

Comfortable Functions

Fuzzy | Auto | HI POWER

Comfortable Air Flow Functions

Auto Flap | Memory | Air Scroll | UP/DOWN | Lateral Swing

Convenient & Economy Functions

Economy | DRY | OFF Timer | Sleep | On 24h Timer Off | On Timer

Maintenance & Prevention Functions

MC | Self Diagnostic | Detachable

Others

Back-up Switch | Auto Restart | 24h ON | Luminous

SPECIFICATIONS

Item		Model	SRK71ZM-S
Nominal cooling capacity	ISO-T1(JIS)	kW	7.1
Sound power level *	Cooling	dB(A)	60
Sound pressure level *	Cooling	dB(A)	Hi:49 Me:45 Lo:39 Ulo:26
Air flow	Cooling	CMM	Hi:19.5 Me:17.5 Lo:14.0 Ulo:8.0
Exterior dimensions (H×W×D)		mm	318×1098×248
Net weight		kg	16
Clean filter			Allergen Clear Filter × 1, Photocatalytic Washable Deodorizing Filter × 1
Piping	Liquid line	mm(in)	ϕ6.35(1/4")
	Gas line	mm(in)	ϕ15.88(5/8")

The data are measured under the following conditions(ISO-T1). Cooling: Indoor temp. of 27CDB, 19CWB, and outdoor temp. of 35CDB. Heating: Indoor temp. of 20CDB, and outdoor temp. of 7CDB, 6CWB.
* Indicates the value in an anechoic chamber.During operation these values are somewhat higher due to ambient conditions.

SRR-ZJ

Ceiling Concealed type





SRR35ZJ-S, SRR50ZJ-S, SRR60ZJ-S

FUNCTION



OPTIONAL PARTS FOR DUCTED TYPE



SPECIFICATIONS

Item		Model	SRR35ZJ-S	SRR50ZJ-S	SRR60ZJ-S
Cooling capacity	ISO-T1(JIS)	kW	3.5	5.0	6.0
Heating capacity	ISO-T1(JIS)	kW	4.5	5.8	6.8
Sound pressure level *	Cooling	dB(A)	Hi:42 Me:37 Lo:30	Hi:48 Me:42 Lo:33	Hi:51 Me:44 Lo:35
Air flow Q'ty (Hi)	Cooling	CMM	9.0	10.5	12.5
Exterior dimensions(H×W×D)		mm	230×740×455		
Net weight		kg	22	23	
Piping	Liquid line	mm(in)	ϕ 6.35(1/4")	ϕ 6.35(1/4")	
	Gas line	mm(in)	ϕ 9.52(3/8")	ϕ 12.7(1/2")	
OUTDOOR UNITS TO BE COMBINED			SCM45,60,80ZJ-S	SCM60,80ZJ-S	SCM60,80ZJ-S

The data are measured under the following conditions(ISO-T1). Cooling: Indoor temp. of 27CDB, 19CWB, and outdoor temp. of 35CDB. Heating: Indoor temp. of 20CDB, and outdoor temp. of 7CDB, 6CWB.
* Indicates the value in an anechoic chamber.During operation these values are somewhat higher due to ambient conditions.

FDTC-VF

4way ceiling cassette type



FDTC35VF, FDTC50VF, FDTC60VF

600 x 600
Super Compact type

Wired remote control



RC-E4 (option)



RCH-E3 (option)

Wireless remote control



RCN-TC-24W-ER (option)

FUNCTION

Comfortable Functions



Comfortable Air Flow Functions



Convenient & Economy Functions



Maintenance & Prevention Functions



Others



SPECIFICATIONS

Item		Model	FDTC35VF	FDTC50VF	FDTC60VF
Cooling capacity	ISO-T1(JIS)	kW	3.5	5.0	6.0
Heating capacity	ISO-T1(JIS)	kW	4.5	5.8	6.8
Sound pressure level ⋆ ※	Cooling	dB(A)	Hi:40 Me:36 Lo:30	Hi:42 Me:36 Lo:30	Hi:46 Me:39 Lo:30
Air flow Q'ty (Hi)	Cooling	CMM	9.5	11.5	13.5
Exterior dimensions (H×W×D)	Main unit	mm	248×570×570		
	Panel	mm	35×700×700		
Net weight	Main unit	kg	15		
	Panel	kg	3.5		
Piping	Liquid line	mm(in)	φ6.35(1/4")	φ6.35(1/4")	
	Gas line	mm(in)	φ9.52(3/8")	φ12.7(1/2")	
OUTDOOR UNITS TO BE COMBINED			SCM45,60,80ZJ-S	SCM60,80ZJ-S	SCM60,80ZJ-S

The data are measured under the following conditions(ISO-T1). Cooling: Indoor temp. of 27CDB, 19CWB, and outdoor temp. of 35CDB. Heating: Indoor temp. of 20CDB, and outdoor temp. of 7CDB, 6CWB.
⋆ Indicates the value in an anechoic chamber.During operation these values are somewhat higher due to ambient conditions.
※ Powerful-Hi can be selected. Sound level:25VD(Cooling:38 Heating:39), 35VD(Cooling:41 Heating:43), 40/50/60VD(Cooling:47 Heating:47)

The industry' s highest COP levels

Our new models, SCM45~125ZJ-S have realized the highest level of COP (coefficient of performance) in the industry with full model change to both of outdoor and indoor (SRK series) units.
Outdoor unit uses new advanced compressors with new inverter control (Vector control) and new M shape fin.
Indoor units SRK series are the latest series, which are common to both of single and multi system, using the new heat exchanger and improved air flow system.

EER in Cooling

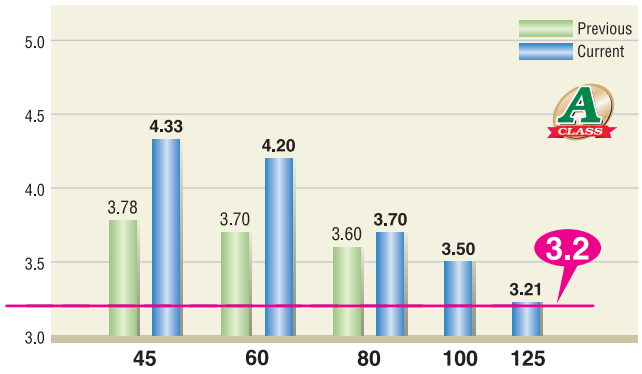

PIPING LENGTH

Limit The maximum piping length of the refrigerant pipes for the outdoor units, and the maximum height difference for the outdoor units are as shown below.

		SCM45ZJ-S	SCM60ZJ-S1	SCM80ZJ-S1	SCM100/125ZJ-S1
	length for one indoor unit	under 25m	under 25m	under 25m	under 25m
	total length for all rooms	under 30m	under 40m	under 70m	under 90m
height difference	lower installation spot of the indoor unit (A)	under 15m	under 15m	under 20m	under 20m
	upper installation spot of the indoor unit (B)	under 15m	under 15m	under 20m	under 20m
	maximum height difference of the indoor units (C)	under 25m	under 25m	under 25m	under 25m
	length of precharged refrigerant pipe	30m	40m	40m	50m

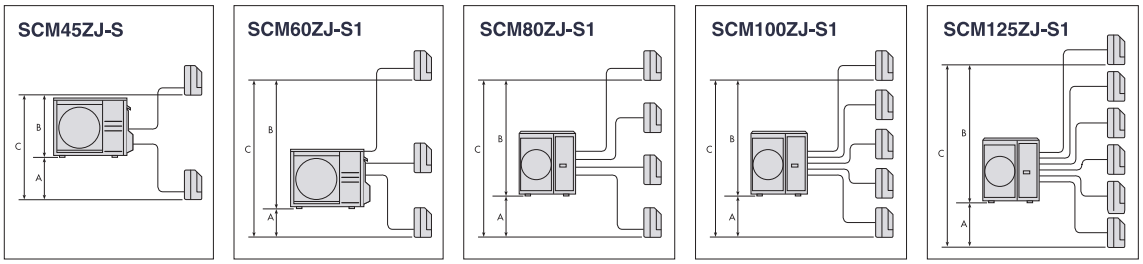

OUTDOOR UNIT SPECIFICATIONS

Item \ Model			For two rooms	For three rooms	For four rooms	For five rooms	For six rooms
			SCM45ZJ-S	SCM60ZJ-S1	SCM80ZJ-S1	SCM100ZJ-S1	SCM125ZJ-S1
Power supply			1Phase, 220/230/240V, 50Hz				
Nominal cooling capacity	ISO-T1	kW	4.5(1.8~6.4)	6.0(1.8~7.5)	8.0(1.8~9.2)	10.0(1.8~12.0)	12.5(1.8~14.0)
Cooling input	at 230V	kW	1.04(0.49~2.14)	1.43(0.50~2.39)	2.16(0.48~2.83)	2.86(0.65~4.03)	3.90(0.65~4.80)
Energy label	Cooling		A/A	A/A	A/A	A/A	A/A
EER (In cooling)			4.33	4.2	3.70	3.50	3.21
Running current	Cooling	A	4.8/4.6/4.4	6.8/6.5/6.2	9.9/9.4/9.0	13.0/12.4/11.9	17.7/17.0/16.3
Inrush current (Max)		A	5.5/5.3/5.1(14)	7.1/6.8/6.6(17)	10.4/10.0/9.5(20)	13.3/12.8/12.2(29)	17.7/17.0/16.3(29)
Sound power level*	Cooling	dB(A)	60	63	66	68	69
Sound pressure level*	Cooling	dB(A)	47	50	54	56	57
Air flow	Cooling	CMM	40.0	42.0	56.0	75.0	75.0
Exterior dimensions (H×W×D)		mm	640×850(+65)×290		750×880(+73)×340	945×970(+73)×370	
Net weight		kg	47	49	62	92	
Refrigerant			R410A				
Total indoor units capacity		kW	7.0	11.0	13.5	16.0	19.5

The data are measured under the following conditions(ISO-T1). Cooling: Indoor temp. of 27CDB, 19CWB, and outdoor temp. of 35CDB.
* Indicates the value in an anechoic chamber.During operation these values are somewhat higher due to ambient conditions.

Control option

Wired remote control can be connected

Model	Interface	Remote Control
SRK20~60ZMX-S/S1 SRK63/71/80ZM-S SRK25~50ZMA-S SRF35/50ZJX-S/S1 SRR35/50/60ZJ-S	SC-BIKN-E	RC-E5
FDTC25~60V※	not required	

※If wireless remote control is required, use RCN-TC-24W-ER

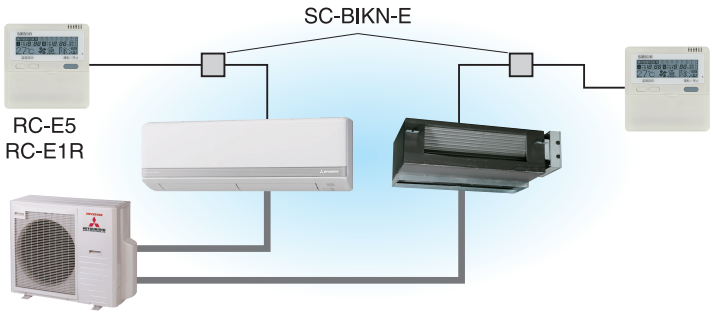

Can be connected to SUPERLINK- @

Model	Interface	Remote Control
SRK20~60ZMX-S SRK63/71/80ZM-S SRK25~50ZMA-S SRF35/50ZJX-S/S1 SRR35/50/60ZJ-S	SC-BIKN-E SC-ADNA-E	RC-E5
FDTC25~60V	SC-ADNA-E	

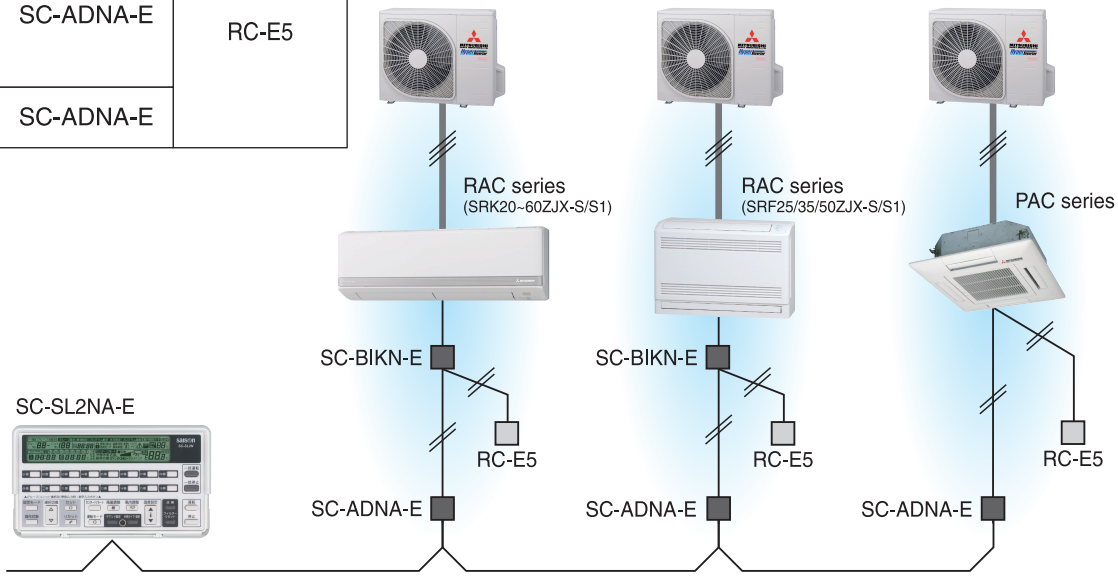

External switch connection CnT

All indoor units are equipped with an additional connection point-CnT-to connect indoor units to an external ON/OFF switch; e.g. time clock, fire alarm, etc.

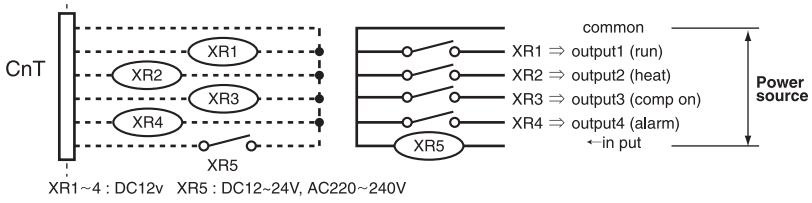

Model	Interface
FDTC25~60V	not required
SRK20~60ZMX-S SRK63/71/80ZM-S SRK25~50ZMA-S SRF35/50ZJX-S/S1 SRR35/50/60ZJ-S	SC-BIKN-E



Remote surveillance system



Card key on-off

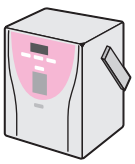

Humidifier linkage

Table of Indoor unit combination SCM45ZJ-S (Cooling operation)

Indoor unit combination		Cooling capacity (kW)					Power consumption (W)			Standard current (A)		
		Room cooling capacity (kW)		Total capacity (kW)			Min.	Standard	Max.	220V	230V	240V
		A room	B room	Min.	Standard	Max.						
1 room	25	2.5	—	1.8	2.5	3.2	490	710	1040	3.3	3.1	3.0
	35	3.5	—	1.8	3.5	3.7	490	1030	1200	4.7	4.5	4.3
2 room	25 + 25	2.50	2.50	3.0	5.0	6.1	560	1340	2050	6.2	5.9	5.6
	25 + 35	2.42	3.38	3.0	5.8	6.3	560	1820	2140	8.4	8.0	7.7
	35 + 35	2.90	2.90	3.0	5.8	6.3	560	1820	2140	8.4	8.0	7.7

Table of Indoor unit combination SCM60ZJ-S1 (Cooling operation)

Indoor unit combination		Cooling capacity (kW)						Power consumption (W)			Standard current (A)		
		Room Cooling capacity (kW)			Total capacity (kW)			Min.	Standard	Max.	220V	230V	240V
		A room	B room	C room	Min.	Standard	Max.						
1 room	25	2.5	—	—	1.8	2.5	3.2	500	760	1080	3.5	3.3	3.2
	35	3.5	—	—	1.8	3.5	3.7	500	1150	1240	5.3	5.1	4.8
	50	5.0	—	—	1.8	5.0	5.6	500	1860	2100	8.5	8.2	7.8
	60	6.0	—	—	1.8	6.0	6.1	500	2350	2370	10.8	10.3	9.9
2 room	25 + 25	2.45	2.45	—	3.0	4.9	6.1	570	1340	2110	6.2	5.9	5.6
	25 + 35	2.42	3.38	—	3.0	5.8	6.4	570	1920	2270	8.8	8.4	8.1
	25 + 50	2.23	4.47	—	3.0	6.7	6.8	570	2370	2390	10.9	10.4	10.0
	25 + 60	1.97	4.73	—	3.0	6.7	6.8	570	2370	2390	10.9	10.4	10.0
	35 + 35	3.30	3.30	—	3.0	6.6	6.8	570	2330	2390	10.7	10.2	9.8
	35 + 50	2.76	3.94	—	3.0	6.7	6.8	570	2370	2390	10.9	10.4	10.0
	35 + 60	2.47	4.23	—	3.0	6.7	6.8	570	2370	2390	10.9	10.4	10.0
	50 + 50	3.35	3.35	—	3.0	6.7	6.8	570	2370	2390	10.9	10.4	10.0
	50 + 60	3.05	3.65	—	3.0	6.7	6.8	570	2370	2390	10.9	10.4	10.0
3 room	25 + 25 + 25	2.00	2.00	2.00	3.6	6.0	7.3	690	1470	2390	7.0	6.7	6.4
	25 + 25 + 35	1.79	1.79	2.51	3.6	6.1	7.3	690	1500	2390	7.1	6.8	6.5
	25 + 25 + 50	1.60	1.60	3.20	3.6	6.4	7.3	690	1540	2390	7.3	7.0	6.7
	25 + 25 + 60	1.52	1.52	3.65	3.6	6.7	7.3	690	1580	2390	7.5	7.2	6.9
	25 + 35 + 35	1.68	2.36	2.36	3.6	6.4	7.3	690	1540	2390	7.3	7.0	6.7
	25 + 35 + 50	1.52	2.13	3.05	3.6	6.7	7.3	690	1580	2390	7.5	7.2	6.9
	35 + 35 + 35	2.20	2.20	2.20	3.6	6.6	7.3	690	1560	2390	7.4	7.1	6.8

Table of Indoor unit combination SCM80ZJ-S1 (Cooling operation)

Indoor unit combination		Cooling capacity (kW)							Power consumption (W)			Standard current (A)		
		Room cooling capacity (kW)				Total capacity (kW)			Min.	Standard	Max.	220V	230V	240V
		A room				Min.	Standard	Max.						
1 room	25	2.5	—	—	—	1.8	2.5	3.2	480	730	1080	3.4	3.2	3.1
	35	3.5	—	—	—	1.8	3.5	3.7	480	1120	1240	5.1	4.9	4.7
	50	5.0	—	—	—	1.8	5.0	5.8	480	1710	2100	7.9	7.5	7.2
	60	6.0	—	—	—	1.8	6.0	6.7	480	2140	2700	9.8	9.4	9.0
2 room	25 + 25	2.50	2.50	—	—	3.0	5.0	6.5	550	1360	2270	6.2	6.0	5.7
	25 + 35	2.46	3.44	—	—	3.0	5.9	6.8	550	1780	2470	8.2	7.8	7.5
	25 + 50	2.47	4.93	—	—	3.0	7.4	7.5	550	2430	2830	11.2	10.7	10.2
	25 + 60	2.18	5.22	—	—	3.0	7.4	7.5	550	2430	2830	11.2	10.7	10.2
	35 + 35	3.45	3.45	—	—	3.0	6.9	7.5	550	2200	2680	10.1	9.7	9.3
	35 + 50	3.05	4.35	—	—	3.0	7.4	7.5	550	2430	2830	11.2	10.7	10.2
	35 + 60	2.73	4.67	—	—	3.0	7.4	7.5	550	2430	2830	11.2	10.7	10.2
	50 + 50	3.70	3.70	—	—	3.0	7.4	7.5	550	2430	2830	11.2	10.7	10.2
	50 + 60	3.36	4.04	—	—	3.0	7.4	7.5	550	2430	2830	11.2	10.7	10.2
	60 + 60	3.70	3.70	—	—	3.0	7.4	7.5	550	2430	2830	11.2	10.7	10.2
3 room	25 + 25 + 25	2.37	2.37	2.37	—	3.7	7.1	8.1	670	1950	2830	9.0	8.6	8.2
	25 + 25 + 35	2.29	2.29	3.21	—	3.7	7.8	8.1	670	2320	2830	10.7	10.2	9.8
	25 + 25 + 50	1.95	1.95	3.90	—	3.7	7.8	8.1	670	2320	2830	10.7	10.2	9.8
	25 + 25 + 60	1.77	1.77	4.25	—	3.7	7.8	8.1	670	2320	2830	10.7	10.2	9.8
	25 + 35 + 35	2.05	2.87	2.87	—	3.7	7.8	8.1	670	2320	2830	10.7	10.2	9.8
	25 + 35 + 50	1.77	2.48	3.55	—	3.7	7.8	8.1	670	2320	2830	10.7	10.2	9.8
	25 + 35 + 60	1.63	2.28	3.90	—	3.7	7.8	8.1	670	2320	2830	10.7	10.2	9.8
	25 + 50 + 50	1.56	3.12	3.12	—	3.7	7.8	8.1	670	2320	2830	10.7	10.2	9.8
	25 + 50 + 60	1.44	2.89	3.47	—	3.7	7.8	8.1	670	2320	2830	10.7	10.2	9.8
	35 + 35 + 35	2.60	2.60	2.60	—	3.7	7.8	8.1	670	2320	2830	10.7	10.2	9.8
	35 + 35 + 50	2.28	2.28	3.25	—	3.7	7.8	8.1	670	2320	2830	10.7	10.2	9.8
	35 + 35 + 60	2.10	2.10	3.60	—	3.7	7.8	8.1	670	2320	2830	10.7	10.2	9.8
	35 + 50 + 50	2.02	2.89	2.89	—	3.7	7.8	8.1	670	2320	2830	10.7	10.2	9.8
4 room	25 + 25 + 25 + 25	1.98	1.98	1.98	1.98	4.4	7.9	8.7	890	2200	2830	10.0	9.6	9.2
	25 + 25 + 25 + 35	1.80	1.80	1.80	2.51	4.4	7.9	8.7	890	2200	2830	10.0	9.6	9.2
	25 + 25 + 25 + 50	1.60	1.60	1.60	3.20	4.4	8.0	8.7	890	2220	2830	10.1	9.7	9.3
	25 + 25 + 25 + 60	1.48	1.48	1.48	3.56	4.4	8.0	8.7	890	2220	2830	10.1	9.7	9.3
	25 + 25 + 35 + 35	1.67	1.67	2.33	2.33	4.4	8.0	8.7	890	2220	2830	10.1	9.7	9.3
	25 + 25 + 35 + 50	1.48	1.48	2.07	2.96	4.4	8.0	8.7	890	2220	2830	10.1	9.7	9.3
	25 + 35 + 35 + 35	1.54	2.15	2.15	2.15	4.4	8.0	8.7	890	2220	2830	10.1	9.7	9.3

Table of Indoor unit combination SCM100ZJ-S1 (30A) ISOLATOR (Cooling operation)

Indoor unit combination		Cooling capacity (kW)									Power consumption (W)			Standard current (A)		
		Room cooling capacity (kW)						Total capacity (kW)								
		A room	B room	C room	D room	E room	F room	Min.	Standard	Max.	Min.	Standard	Max.	220V	230V	240V
1 room	25	2.5	-	-	-	-	-	1.8	2.5	3.2	650	1000	1350	4.6	4.4	4.2
	35	3.5	-	-	-	-	-	1.8	3.5	3.7	650	1500	1600	6.9	6.6	6.3
	50	5.0	-	-	-	-	-	1.8	5.0	5.8	650	2150	2500	9.9	9.4	9.0
	60	6.0	-	-	-	-	-	1.8	6.0	6.7	650	2720	3000	12.5	11.9	11.4
	71	7.1	-	-	-	-	-	1.8	7.1	7.2	650	3250	3080	14.9	14.3	13.7
2 room	25 + 25	2.50	2.50	-	-	-	-	3.0	5.0	6.8	740	1420	2200	6.5	6.2	6.0
	25 + 35	2.50	3.50	-	-	-	-	3.0	6.0	6.9	740	1810	2320	8.3	7.9	7.6
	25 + 50	2.50	5.00	-	-	-	-	3.0	7.5	9.0	740	2470	3220	11.3	10.8	10.4
	25 + 60	2.50	6.00	-	-	-	-	3.0	8.5	9.4	740	2810	3360	12.9	12.3	11.8
	25 + 71	2.53	7.17	-	-	-	-	3.0	9.7	10.4	740	3350	4020	15.4	14.7	14.1
	35 + 35	3.50	3.50	-	-	-	-	3.0	7.0	7.4	740	2290	2820	10.5	10.1	9.6
	35 + 50	3.50	5.00	-	-	-	-	3.0	8.5	9.5	740	2810	3620	12.9	12.3	11.8
	35 + 60	3.50	6.00	-	-	-	-	3.0	9.5	10.4	740	3280	3990	15.1	14.4	13.8
	35 + 71	3.30	6.70	-	-	-	-	3.0	10.0	10.9	740	3480	4250	15.8	15.1	14.5
	50 + 50	5.00	5.00	-	-	-	-	3.0	10.0	11.6	740	3480	4350	16.0	15.3	14.6
	50 + 60	4.55	5.45	-	-	-	-	3.0	10.0	11.8	740	3480	4410	16.0	15.3	14.6
	50 + 71	4.13	5.87	-	-	-	-	3.0	10.0	11.8	740	3470	4410	15.8	15.1	14.5
	60 + 60	5.00	5.00	-	-	-	-	3.0	10.0	11.8	740	3470	4410	15.9	15.2	14.6
	60 + 71	4.58	5.42	-	-	-	-	3.0	10.0	11.8	740	3470	4410	15.8	15.1	14.5
	71 + 71	5.00	5.00	-	-	-	-	3.0	10.0	11.8	740	3460	4410	15.6	14.9	14.3
3 room	25 + 25 + 25	2.50	2.50	2.50	-	-	-	3.7	7.5	9.4	880	2130	3340	9.8	9.4	9.0
	25 + 25 + 35	2.50	2.50	3.50	-	-	-	3.7	8.5	9.9	880	2650	3540	12.2	11.6	11.2
	25 + 25 + 50	2.50	2.50	5.00	-	-	-	3.7	10.0	11.8	880	3280	4250	15.1	14.4	13.8
	25 + 25 + 60	2.27	2.27	5.45	-	-	-	3.7	10.0	11.8	880	3280	4250	15.1	14.4	13.8
	25 + 25 + 71	2.07	2.07	5.87	-	-	-	3.7	10.0	11.8	880	3270	4250	15.0	14.4	13.8
	25 + 35 + 35	2.50	3.50	3.50	-	-	-	3.7	9.5	10.4	880	3130	3950	14.4	13.7	13.2
	25 + 35 + 50	2.27	3.18	4.55	-	-	-	3.7	10.0	11.8	880	3280	4250	15.1	14.4	13.8
	25 + 35 + 60	2.08	2.92	5.00	-	-	-	3.7	10.0	11.8	880	3270	4250	15.0	14.4	13.8
	25 + 35 + 71	1.91	2.67	5.42	-	-	-	3.7	10.0	11.8	880	3270	4250	15.0	14.4	13.8
	25 + 50 + 50	2.00	4.00	4.00	-	-	-	3.7	10.0	11.8	880	3270	4250	15.0	14.4	13.8
	25 + 50 + 60	1.85	3.70	4.44	-	-	-	3.7	10.0	11.8	880	3270	4250	15.0	14.4	13.8
	25 + 50 + 71	1.71	3.42	4.86	-	-	-	3.7	10.0	11.8	880	3260	4250	21.4	20.5	19.7
	25 + 60 + 60	1.72	4.14	4.14	-	-	-	3.7	10.0	11.8	880	3260	4250	21.4	20.5	19.7
	25 + 60 + 71	1.60	3.85	4.55	-	-	-	3.7	10.0	11.8	880	3260	4250	21.4	20.5	19.7
	35 + 35 + 35	3.33	3.33	3.33	-	-	-	3.7	10.0	10.9	880	3280	4120	15.1	14.4	13.8
	35 + 35 + 50	2.92	2.92	4.17	-	-	-	3.7	10.0	11.8	880	3270	4250	15.0	14.4	13.8
	35 + 35 + 60	2.69	2.69	4.62	-	-	-	3.7	10.0	11.8	880	3270	4250	15.0	14.4	13.8
	35 + 35 + 71	2.48	2.48	5.04	-	-	-	3.7	10.0	11.8	880	3260	4250	14.8	14.2	13.6
	35 + 50 + 50	2.59	3.70	3.70	-	-	-	3.7	10.0	11.8	880	3270	4250	15.0	14.4	13.8
	35 + 50 + 60	2.41	3.45	4.14	-	-	-	3.7	10.0	11.8	880	3260	4250	15.0	14.3	13.7
	35 + 50 + 71	2.24	3.21	4.55	-	-	-	3.7	10.0	11.8	880	3260	4250	15.0	14.3	13.7
	35 + 60 + 60	2.26	3.87	3.87	-	-	-	3.7	10.0	11.8	880	3260	4250	15.0	14.3	13.7
	50 + 50 + 50	3.33	3.33	3.33	-	-	-	3.7	10.0	11.8	880	3260	4250	15.0	14.3	13.7
	50 + 50 + 60	3.13	3.13	3.75	-	-	-	3.7	10.0	11.8	880	3260	4250	15.0	14.3	13.7
4 room	25 + 25 + 25 + 25	2.50	2.50	2.50	2.50	-	-	4.4	10.0	11.8	1100	3220	4050	14.7	14.0	13.4
	25 + 25 + 25 + 35	2.27	2.27	2.27	3.18	-	-	4.4	10.0	11.8	1100	3210	4050	14.6	14.0	13.4
	25 + 25 + 25 + 50	2.00	2.00	2.00	4.00	-	-	4.4	10.0	11.8	1100	3210	4050	14.6	14.0	13.4
	25 + 25 + 25 + 60	1.85	1.85	1.85	4.44	-	-	4.4	10.0	11.8	1100	3200	4050	14.6	13.9	13.3
	25 + 25 + 25 + 71	1.71	1.71	1.71	4.86	-	-	4.4	10.0	11.8	1100	3190	4050	14.5	13.9	13.3
	25 + 25 + 35 + 35	2.08	2.08	2.92	2.92	-	-	4.4	10.0	11.8	1100	3210	4050	14.6	14.0	13.4
	25 + 25 + 35 + 50	1.85	1.85	2.59	3.70	-	-	4.4	10.0	11.8	1100	3200	4050	14.6	13.9	13.3
	25 + 25 + 35 + 60	1.72	1.72	2.41	4.14	-	-	4.4	10.0	11.8	1100	3190	4050	14.5	13.9	13.3
	25 + 25 + 35 + 71	1.60	1.60	2.24	4.55	-	-	4.4	10.0	11.8	1100	3190	4050	14.5	13.9	13.3
	25 + 25 + 50 + 50	1.67	1.67	3.33	3.33	-	-	4.4	10.0	11.8	1100	3190	4050	14.5	13.9	13.3
	25 + 25 + 50 + 60	1.56	1.56	3.13	3.75	-	-	4.4	10.0	11.8	1100	3180	4050	14.5	13.8	13.3
	25 + 35 + 35 + 35	1.92	2.69	2.69	2.69	-	-	4.4	10.0	11.8	1100	3200	4050	14.6	13.9	13.3
	25 + 35 + 35 + 50	1.72	2.41	2.41	3.45	-	-	4.4	10.0	11.8	1100	3190	4050	14.5	13.9	13.3
	25 + 35 + 35 + 60	1.61	2.26	2.26	3.87	-	-	4.4	10.0	11.8	1100	3190	4050	14.5	13.9	13.3
	25 + 35 + 50 + 50	1.56	2.19	3.13	3.13	-	-	4.4	10.0	11.8	1100	3180	4050	14.5	13.8	13.3
	35 + 35 + 35 + 35	2.50	2.50	2.50	2.50	-	-	4.4	10.0	11.8	1100	3190	4050	14.5	13.9	13.3
	35 + 35 + 35 + 50	2.26	2.26	2.26	3.23	-	-	4.4	10.0	11.8	1100	3190	4050	14.5	13.9	13.3
5 room	25 + 25 + 25 + 25 + 25	2.00	2.00	2.00	2.00	2.00	-	5.1	10.0	11.8	1210	2940	4030	13.4	12.8	12.3
	25 + 25 + 25 + 25 + 35	1.85	1.85	1.85	1.85	2.59	-	5.1	10.0	11.8	1210	2940	4030	13.4	12.8	12.3
	25 + 25 + 25 + 25 + 50	1.67	1.67	1.67	1.67	3.33	-	5.1	10.0	11.8	1210	2930	4030	13.3	12.8	12.2
	25 + 25 + 25 + 25 + 60	1.56	1.56	1.56	1.56	3.75	-	5.1	10.0	11.8	1210	2930	4030	13.3	12.8	12.2
	25 + 25 + 25 + 35 + 35	1.72	1.72	1.72	2.41	2.41	-	5.1	10.0	11.8	1210	2930	4030	13.3	12.8	12.2
	25 + 25 + 25 + 35 + 50	1.56	1.56	1.56	2.19	3.13	-	5.1	10.0	11.8	1210	2930	4030	13.3	12.8	12.2
	25 + 25 + 35 + 35 + 35	1.61	1.61	2.26	2.26	2.26	-	5.1	10.0	11.8	1210	2930	4030	13.3	12.8	12.2

Table of Indoor unit combination SCM125ZJ-S1 (30A) ISOLATOR (Cooling operation)

Indoor unit combination		Cooling capacity (kW)									Power consumption (W)			Standard current (A)		
		Room cooling capacity (kW)						Total capacity (kW)								
		A room	B room	C room	D room	E room	F room	Min.	Standard	Max.	Min.	Standard	Max.	220V	230V	240V
1 room	25	2.5	-	-	-	-	-	1.8	2.5	3.2	650	1000	1350	4.6	4.4	4.2
	35	3.5	-	-	-	-	-	1.8	3.5	3.7	650	1500	1600	6.9	6.6	6.3
	50	5.0	-	-	-	-	-	1.8	5.0	5.8	650	2150	2500	9.9	9.4	9.0
	60	6.0	-	-	-	-	-	1.8	6.0	6.7	650	2720	3000	12.5	11.9	11.4
	71	7.1	-	-	-	-	-	1.8	7.1	7.2	650	3250	3080	14.9	14.3	13.7
2 room	25 + 25	2.50	2.50	-	-	-	-	3.0	5.0	6.8	740	1420	2200	6.5	6.2	6.0
	25 + 35	2.50	3.50	-	-	-	-	3.0	6.0	6.9	740	1810	2320	8.3	7.9	7.6
	25 + 50	2.50	5.00	-	-	-	-	3.0	7.5	9.0	740	2470	3220	11.3	10.8	10.4
	25 + 60	2.50	6.00	-	-	-	-	3.0	8.5	9.4	740	2810	3360	12.9	12.3	11.8
	25 + 71	2.53	7.17	-	-	-	-	3.0	9.7	10.4	740	3350	4020	15.4	14.7	14.1
	35 + 35	3.50	3.50	-	-	-	-	3.0	7.0	7.4	740	2290	2820	10.5	10.1	9.6
	35 + 50	3.50	5.00	-	-	-	-	3.0	8.5	9.5	740	2810	3620	12.9	12.3	11.8
	35 + 60	3.50	6.00	-	-	-	-	3.0	9.5	10.4	740	3280	3990	15.1	14.4	13.8
	35 + 71	3.50	7.10	-	-	-	-	3.0	10.6	10.9	740	3760	4250	17.1	16.3	15.7
	50 + 50	5.00	5.00	-	-	-	-	3.0	10.0	10.8	740	3520	4050	16.2	15.5	14.8
	50 + 60	5.00	6.00	-	-	-	-	3.0	11.0	12.0	740	3870	4410	17.8	17.0	16.3
	50 + 71	4.96	7.04	-	-	-	-	3.0	12.0	12.0	740	4410	4410	20.0	19.2	18.4
	60 + 60	6.00	6.00	-	-	-	-	3.0	12.0	12.0	740	4410	4410	20.2	19.4	18.6
	60 + 71	5.73	6.77	-	-	-	-	3.0	12.5	12.5	740	4710	4710	21.4	20.5	19.6
	71 + 71	6.25	6.25	-	-	-	-	3.0	12.5	12.5	740	4710	4710	21.2	20.3	19.4

Table of Indoor unit combination SCM125ZJ-S1 (30A) ISOLATOR (Cooling operation)

Indoor unit combination		Cooling capacity (kW)									Power consumption (W)			Standard current (A)		
		Room cooling capacity (kW)						Total capacity (kW)								
		A room	B room	C room	D room	E room	F room	Min.	Standard	Max.	Min.	Standard	Max.	220V	230V	240V
3 room	25 + 25 + 25	2.50	2.50	2.50	-	-	-	3.7	7.5	9.6	880	2130	3640	9.8	9.4	9.0
	25 + 25 + 35	2.50	2.50	3.50	-	-	-	3.7	8.5	10.1	880	2650	3900	12.2	11.6	11.2
	25 + 25 + 50	2.50	2.50	5.00	-	-	-	3.7	10.0	12.6	880	3420	4800	15.7	15.0	14.4
	25 + 25 + 60	2.50	2.50	6.00	-	-	-	3.7	11.0	12.6	880	3910	4800	18.0	17.2	16.5
	25 + 25 + 71	2.58	2.58	7.33	-	-	-	3.7	12.5	12.6	880	4670	4800	21.2	20.3	19.5
	25 + 35 + 35	2.50	3.50	3.50	-	-	-	3.7	9.5	10.4	880	3130	3910	14.4	13.7	13.2
	25 + 35 + 50	2.50	3.50	5.00	-	-	-	3.7	11.0	12.6	880	3910	4800	18.0	17.2	16.5
	25 + 35 + 60	2.50	3.50	6.00	-	-	-	3.7	12.0	12.6	880	4440	4800	20.4	19.5	18.7
	25 + 35 + 71	2.39	3.34	6.77	-	-	-	3.7	12.5	12.6	880	4670	4800	21.4	20.5	19.7
	25 + 50 + 50	2.50	5.00	5.00	-	-	-	3.7	12.5	12.6	880	4670	4800	21.4	20.5	19.7
	25 + 50 + 60	2.31	4.63	5.56	-	-	-	3.7	12.5	12.6	880	4670	4800	21.4	20.5	19.7
	25 + 50 + 71	2.14	4.28	6.08	-	-	-	3.7	12.5	12.6	880	4670	4800	21.4	20.5	19.7
	25 + 60 + 60	2.16	5.17	5.17	-	-	-	3.7	12.5	12.6	880	4670	4800	21.4	20.5	19.7
	25 + 60 + 71	2.00	4.81	5.69	-	-	-	3.7	12.5	12.6	880	4670	4800	21.4	20.5	19.7
	25 + 71 + 71	1.87	5.31	5.31	-	-	-	3.7	12.5	12.6	880	4670	4800	21.4	20.5	19.7
	35 + 35 + 35	3.50	3.50	3.50	-	-	-	3.7	10.5	10.9	880	3770	4180	17.3	16.6	15.9
	35 + 35 + 50	3.50	3.50	5.00	-	-	-	3.7	12.0	12.6	880	4440	4800	20.4	19.5	18.7
	35 + 35 + 60	3.37	3.37	5.77	-	-	-	3.7	12.5	12.6	880	4670	4800	21.4	20.5	19.7
	35 + 35 + 71	3.10	3.10	6.29	-	-	-	3.7	12.5	12.6	880	4660	4800	21.2	20.3	19.4
	35 + 50 + 50	3.24	4.63	4.63	-	-	-	3.7	12.5	12.6	880	4670	4800	21.4	20.5	19.7
	35 + 50 + 60	3.02	4.31	5.17	-	-	-	3.7	12.5	12.6	880	4660	4800	21.4	20.5	19.6
	35 + 50 + 71	2.80	4.01	5.69	-	-	-	3.7	12.5	12.6	880	4660	4800	21.4	20.5	19.6
	35 + 60 + 60	2.82	4.84	4.84	-	-	-	3.7	12.5	12.6	880	4660	4800	21.4	20.5	19.6
	35 + 60 + 71	2.64	4.52	5.35	-	-	-	3.7	12.5	12.6	880	4660	4800	21.4	20.5	19.6
	35 + 71 + 71	2.47	5.01	5.01	-	-	-	3.7	12.5	12.6	880	4650	4800	21.3	20.4	19.6
	50 + 50 + 50	4.17	4.17	4.17	-	-	-	3.7	12.5	12.6	880	4660	4800	21.4	20.5	19.6
	50 + 50 + 60	3.91	3.91	4.69	-	-	-	3.7	12.5	12.6	880	4660	4800	21.4	20.5	19.6
	50 + 50 + 71	3.65	3.65	5.19	-	-	-	3.7	12.5	12.6	880	4650	4800	21.3	20.4	19.6
	50 + 60 + 60	3.68	4.41	4.41	-	-	-	3.7	12.5	12.6	880	4650	4800	21.3	20.4	19.6
	50 + 60 + 71	3.45	4.14	4.90	-	-	-	3.7	12.5	12.6	880	4650	4800	21.3	20.4	19.6
	60 + 60 + 60	4.17	4.17	4.17	-	-	-	3.7	12.5	12.6	880	4650	4800	21.3	20.4	19.6
	60 + 60 + 71	3.93	3.93	4.65	-	-	-	3.7	12.5	12.6	880	4650	4800	21.3	20.4	19.6
4 room	25 + 25 + 25 + 25	2.50	2.50	2.50	2.50	-	-	4.4	10.0	12.8	1100	3210	4800	14.6	14.0	13.4
	25 + 25 + 25 + 35	2.50	2.50	2.50	3.50	-	-	4.4	11.0	12.8	1100	3580	4800	16.3	15.6	14.9
	25 + 25 + 25 + 50	2.50	2.50	2.50	5.00	-	-	4.4	12.5	12.8	1100	4740	4800	21.6	20.6	19.8
	25 + 25 + 25 + 60	2.31	2.31	2.31	5.56	-	-	4.4	12.5	12.8	1100	4730	4800	21.5	20.6	19.7
	25 + 25 + 25 + 71	2.14	2.14	2.14	6.08	-	-	4.4	12.5	12.8	1100	4730	4800	21.5	20.6	19.7
	25 + 25 + 35 + 35	2.50	2.50	3.50	3.50	-	-	4.4	12.0	12.8	1100	4100	4800	18.7	17.8	17.1
	25 + 25 + 35 + 50	2.31	2.31	3.24	4.63	-	-	4.4	12.5	12.8	1100	4730	4800	21.5	20.6	19.7
	25 + 25 + 35 + 60	2.16	2.16	3.02	5.17	-	-	4.4	12.5	12.8	1100	4730	4800	21.5	20.6	19.7
	25 + 25 + 35 + 71	2.00	2.00	2.80	5.69	-	-	4.4	12.5	12.8	1100	4720	4800	21.5	20.5	19.7
	25 + 25 + 50 + 50	2.08	2.08	4.17	4.17	-	-	4.4	12.5	12.8	1100	4730	4800	21.5	20.6	19.7
	25 + 25 + 50 + 60	1.95	1.95	3.91	4.69	-	-	4.4	12.5	12.8	1100	4720	4800	21.5	20.5	19.7
	25 + 25 + 50 + 71	1.83	1.83	3.65	5.19	-	-	4.4	12.5	12.8	1100	4720	4800	21.5	20.5	19.7
	25 + 25 + 60 + 60	1.84	1.84	4.41	4.41	-	-	4.4	12.5	12.8	1100	4720	4800	21.5	20.5	19.7
	25 + 25 + 60 + 71	1.73	1.73	4.14	4.90	-	-	4.4	12.5	12.8	1100	4710	4800	21.4	20.5	19.6
	25 + 25 + 71 + 71	1.63	1.63	4.62	4.62	-	-	4.4	12.5	12.8	1100	4700	4800	21.4	20.5	19.6
	25 + 35 + 35 + 35	2.40	3.37	3.37	3.37	-	-	4.4	12.5	12.8	1100	4740	4800	21.6	20.6	19.8
	25 + 35 + 35 + 50	2.16	3.02	3.02	4.31	-	-	4.4	12.5	12.8	1100	4730	4800	21.5	20.6	19.7
	25 + 35 + 35 + 60	2.02	2.82	2.82	4.84	-	-	4.4	12.5	12.8	1100	4720	4800	21.5	20.5	19.7
	25 + 35 + 35 + 71	1.88	2.64	2.64	5.35	-	-	4.4	12.5	12.8	1100	4720	4800	21.5	20.5	19.7
	25 + 35 + 50 + 50	1.95	2.73	3.91	3.91	-	-	4.4	12.5	12.8	1100	4720	4800	21.5	20.5	19.7
	25 + 35 + 50 + 60	1.84	2.57	3.68	4.41	-	-	4.4	12.5	12.8	1100	4720	4800	21.5	20.5	19.7
	25 + 35 + 50 + 71	1.73	2.42	3.45	4.90	-	-	4.4	12.5	12.8	1100	4710	4800	21.4	20.5	19.6
	25 + 35 + 60 + 60	1.74	2.43	4.17	4.17	-	-	4.4	12.5	12.8	1100	4710	4800	21.4	20.5	19.6
	25 + 35 + 60 + 71	1.64	2.29	3.93	4.65	-	-	4.4	12.5	12.8	1100	4700	4800	21.4	20.5	19.6
	25 + 50 + 50 + 50	1.79	3.57	3.57	3.57	-	-	4.4	12.5	12.8	1100	4710	4800	21.4	20.5	19.6
	25 + 50 + 50 + 60	1.69	3.38	3.38	4.05	-	-	4.4	12.5	12.8	1100	4710	4800	21.4	20.5	19.6
	25 + 50 + 60 + 60	1.60	3.21	3.85	3.85	-	-	4.4	12.5	12.8	1100	4700	4800	21.4	20.5	19.6
	35 + 35 + 35 + 35	3.13	3.13	3.13	3.13	-	-	4.4	12.5	12.8	1100	4730	4800	21.5	20.6	19.7
	35 + 35 + 35 + 50	2.82	2.82	2.82	4.03	-	-	4.4	12.5	12.8	1100	4720	4800	21.5	20.5	19.7
	35 + 35 + 35 + 60	2.65	2.65	2.65	4.55	-	-	4.4	12.5	12.8	1100	4720	4800	21.5	20.5	19.7
	35 + 35 + 35 + 71	2.49	2.49	2.49	5.04	-	-	4.4	12.5	12.8	1100	4710	4800	21.4	20.5	19.6
	35 + 35 + 50 + 50	2.57	2.57	3.68	3.68	-	-	4.4	12.5	12.8	1100	4720	4800	21.5	20.5	19.7
	35 + 35 + 50 + 60	2.43	2.43	3.47	4.17	-	-	4.4	12.5	12.8	1100	4710	4800	21.4	20.5	19.6
	35 + 35 + 50 + 71	2.29	2.29	3.27	4.65	-	-	4.4	12.5	12.8	1100	4700	4800	21.4	20.5	19.6
	35 + 35 + 60 + 60	2.30	2.30	3.95	3.95	-	-	4.4	12.5	12.8	1100	4700	4800	21.4	20.5	19.6
	35 + 50 + 50 + 50	2.36	3.38	3.38	3.38	-	-	4.4	12.5	12.8	1100	4710	4800	21.4	20.5	19.6
	35 + 50 + 50 + 60	2.24	3.21	3.21	3.85	-	-	4.4	12.5	12.8	1100	4700	4800	21.4	20.5	19.6
5 room	25 + 25 + 25 + 25 + 25	2.50	2.50	2.50	2.50	2.50	-	5.1	12.5	13.3	1210	4440	4800	20.2	19.3	18.5
	25 + 25 + 25 + 25 + 35	2.31	2.31	2.31	2.31	3.24	-	5.1	12.5	13.3	1210	4430	4800	20.2	19.3	18.5
	25 + 25 + 25 + 25 + 50	2.08	2.08	2.08	2.08	4.17	-	5.1	12.5	13.3	1210	4410	4800	20.1	19.2	18.4
	25 + 25 + 25 + 25 + 60	1.95	1.95	1.95	1.95	4.69	-	5.1	12.5	13.3	1210	4410	4800	20.1	19.2	18.4
	25 + 25 + 25 + 35 + 35	2.16	2.16	2.16	3.02	3.02	-	5.1	12.5	13.3	1210	4420	4800	20.1	19.2	18.4
	25 + 25 + 25 + 35 + 50	1.95	1.95	1.95	2.73	3.91	-	5.1	12.5	13.3	1210	4410	4800	20.1	19.2	18.4
	25 + 25 + 25 + 35 + 60	1.84	1.84	1.84	2.57	4.41	-	5.1	12.5	13.3	1210	4400	4800	20.0	19.1	18.4
	25 + 25 + 25 + 35 + 71	1.73	1.73	1.73	2.42	4.90	-	5.1	12.5	13.3	1210	4390	4800	20.0	19.1	18.3
	25 + 25 + 25 + 50 + 50	1.79	1.79	1.79	3.57	3.57	-	5.1	12.5	13.3	1210	4390	4800	20.0	19.1	18.3
	25 + 25 + 25 + 50 + 60	1.69	1.69	1.69	3.38	4.05	-	5.1	12.5	13.3	1210	4390	4800	20.0	19.1	18.3
	25 + 25 + 25 + 60 + 60	1.60	1.60	1.60	3.85	3.85	-	5.1	12.5	13.3	1210	4380	4800	19.9	19.1	18.3
	25 + 25 + 35 + 35 + 35	2.02	2.02	2.82	2.82	2.82	-	5.1	12.5	13.3	1210	4410	4800	20.1	19.2	18.4
	25 + 25 + 35 + 35 + 50	1.84	1.84	2.57	2.57	3.68	-	5.1	12.5	13.3	1210	4400	4800	20.0	19.1	18.4
	25 + 25 + 35 + 35 + 60	1.74	1.74	2.43	2.43	4.17	-	5.1	12.5	13.3	1210	4390	4800	20.0	19.1	18.3
	25 + 25 + 35 + 35 + 71	1.64	1.64	2.29	2.29	4.65	-	5.1	12.5	13.3	1210	4380	4800	19.9	19.1	18.3
	25 + 25 + 35 + 50 + 50	1.69	1.69	2.36	3.38	3.38	-	5.1	12.5	13.3	1210	4390	4800	20.0	19.1	18.3
	25 + 25 + 35 + 50 + 60	1.60	1.60	2.24	3.21	3.85	-	5.1	12.5	13.3	1210	4380	4800	19.9	19.1	18.3
	25 + 35 + 35 + 35 + 35	1.89	2.65	2.65	2.65	2.65	-	5.1	12.5	13.3	1210	4400	4800	20.0	19.1	18.4
	25 + 35 + 35 + 35 + 50	1.74	2.43	2.43	2.43	3.47	-	5.1	12.5	13.3	1210	4390	4800	20.0	19.1	18.3
	25 + 35 + 35 + 35 + 60	1.64	2.30	2.30	2.30	3.95	-	5.1	12.5	13.3	1210	4380	4800	19.9	19.1	18.3
	25 + 35 + 35 + 50 + 50	1.60	2.24	2.24	3.21	3.21	-	5.1	12.5	13.3	1210	4380	4800	19.9	19.1	18.3
	35 + 35 + 35 + 35 + 35	2.50	2.50	2.50	2.50	2.50	-	5.1	12.5	13.3	1210	4390	4800	20.0	19.1	18.3
	35 + 35 + 35 + 35 + 50	2.30	2.30	2.30	2.30	3.29	-	5.1	12.5	13.3	1210	4380	4800	19.9	19.1	18.3
6 room	25 + 25 + 25 + 25 + 25 + 35	1.95	1.95	1.95	1.95	1.95	2.73	5.5	12.5	13.8	1280	3990	4800	18.2	17.4	16.6
	25 + 25 + 25 + 25 + 25 + 50	1.79	1.79	1.79	1.79	1.79	3.57	5.5	12.5	13.8	1280	3980	4800	18.1	17.3	16.6
	25 + 25 + 25 + 25 + 25 + 60	1.69	1.69	1.69	1.69	1.69	4.05	5.5	12.5	13.8	1280	3980	4800	18.1	17.3	16.6
	25 + 25 + 25 + 25 + 35 + 35	1.84	1.84	1.84	1.84	2.57	2.57	5.5	12.5	13.8	1280	3980	4800	18.1	17.3	16.6
	25 + 25 + 25 + 25 + 35 + 50	1.69	1.69	1.69	1.69	2.36	3.38	5.5	12.5	13.8	1280	3980	4800	18.1	17.3	16.6
	25 + 25 + 25 + 25 + 35 + 60	1.60	1.60	1.60	1.60	2.24	3.85	5.5	12.5	13.8	1280	3970	4800	18.1	17.3	16.6
	25 + 25 + 25 + 35 + 35 + 35	1.74	1.74	1.74	2.43	2.43	2.43	5.5	12.5	13.8	1280	3980	4800	18.1	17.3	16.6
	25 + 25 + 25 + 35 + 35 + 50	1.60	1.60	1.60	2.24	2.24	3.21	5.5	12.5	13.8	1280	3970	4800	18.1	17.3	16.6
	25 + 25 + 35 + 35 + 35 + 35	1.64	1.64	2.30	2.30	2.30	2.30	5.5	12.5	13.8	1280	3970	4800	18.1	17.3	16.6

Dimensions

INDOOR UNIT

Unit: mm

Wall mounted type
SRK60ZMX-S

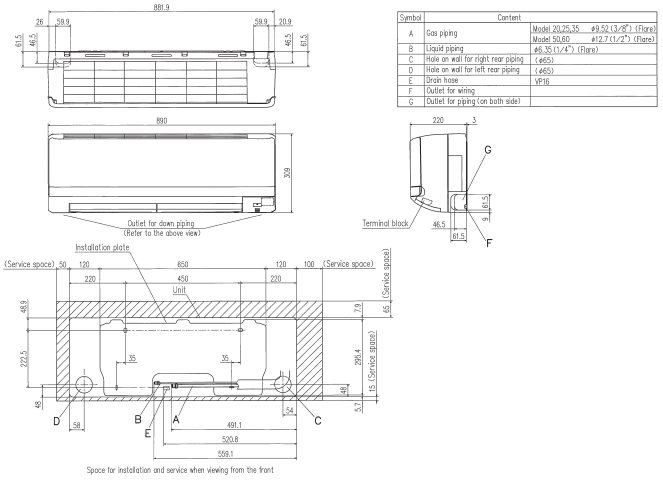

Symbol	Content	
A	Gas piping	Model 20,25,35 ø9.52 (3/8") (Flare) Model 50,60 ø12.7 (1/2") (Flare)
B	Liquid piping	ø6.35 (1/4") (Flare)
C	Hole on wall for right rear piping	(ø65)
D	Hole on wall for left rear piping	(ø65)
E	Drain hose	VP16
F	Outlet for wiring	
G	Outlet for piping (on both side)	

Wall mounted type
SRK25ZMA-S SRK35ZMA-S SRK50ZMA-S

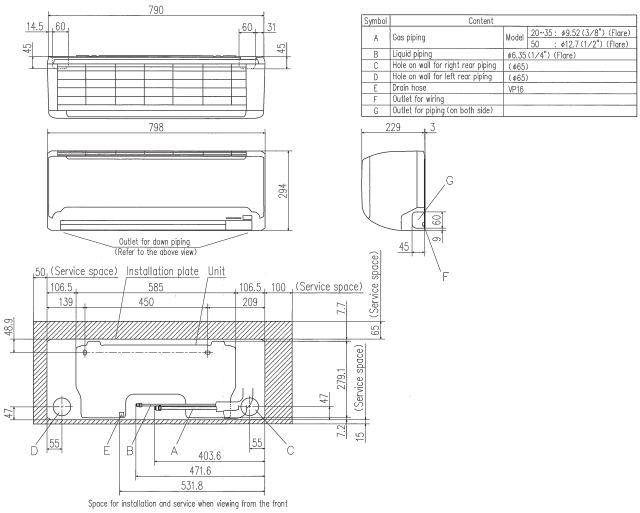

Symbol	Content	
A	Gas piping	Model 20~35 : ø9.52 (3/8") (Flare) 50 : ø12.7 (1/2") (Flare)
B	Liquid piping	ø6.35 (1/4") (Flare)
C	Hole on wall for right rear piping	(ø65)
D	Hole on wall for left rear piping	(ø65)
E	Drain hose	VP16
F	Outlet for wiring	
G	Outlet for piping (on both side)	

Wall mounted type
SRK71ZM-S

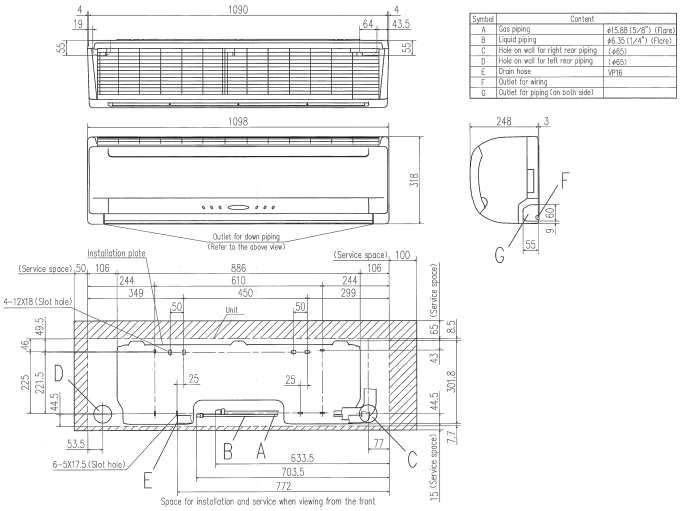

Symbol	Content
A	Gas piping ø15.88 (5/8") (Flare)
B	Liquid piping ø6.35 (1/4") (Flare)
C	Hole on wall for right rear piping (ø65)
D	Hole on wall for left rear piping (ø65)
E	Drain hose VP16
F	Outlet for wiring
G	Outlet for piping (on both side)

Ceiling Concealed
SRR35ZJ-S SRR50ZJ-S SRR60ZJ-S

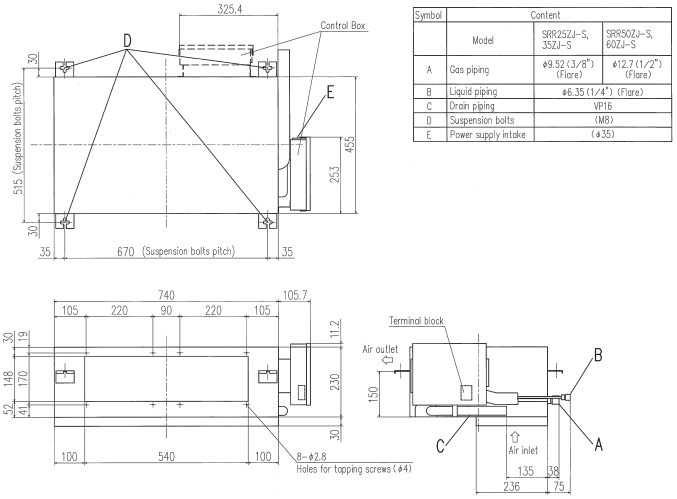

Symbol	Content		
	Model	SRR25ZJ-S, 35ZJ-S	SRR50ZJ-S, 60ZJ-S
A	Gas piping	ø9.52 (3/8") (Flare)	ø12.7 (1/2") (Flare)
B	Liquid piping	ø6.35 (1/4") (Flare)	
C	Drain piping	VP16	
D	Suspension bolts	(M8)	
E	Power supply intake	(ø35)	

4way ceiling cassette type
FDTC35VF FDTC50VF FDTC60VF

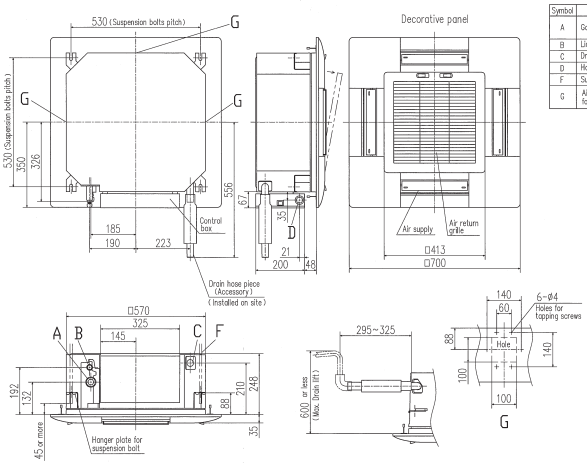

Symbol	Content	
A	Gas piping	Model 25,35 : ø9.52 (3/8") (Flare) 40~60 : ø12.7 (1/2") (Flare)
B	Liquid piping	ø6.35 (1/4") (Flare)
C	Drain piping	VP20 (I.D.20,O.D.26) Note (2)
D	Hole for wiring	ø25
F	Suspension bolts	(M10 or M8)
G	Air outlet opening for ducting	(Knock out)

OUTDOOR UNIT

Unit: mm

SCM45ZJ-S

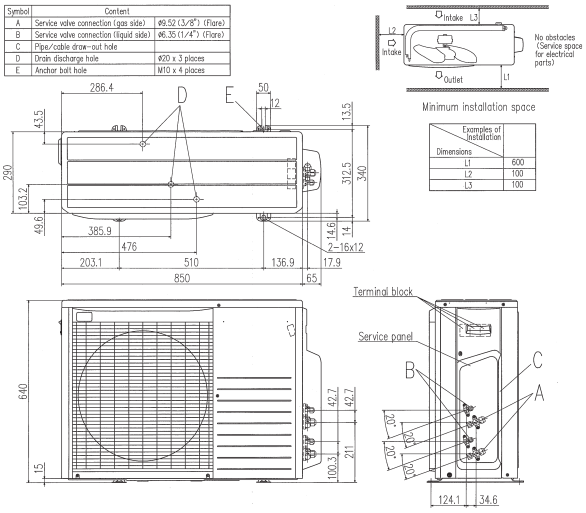

SCM80ZJ-S1

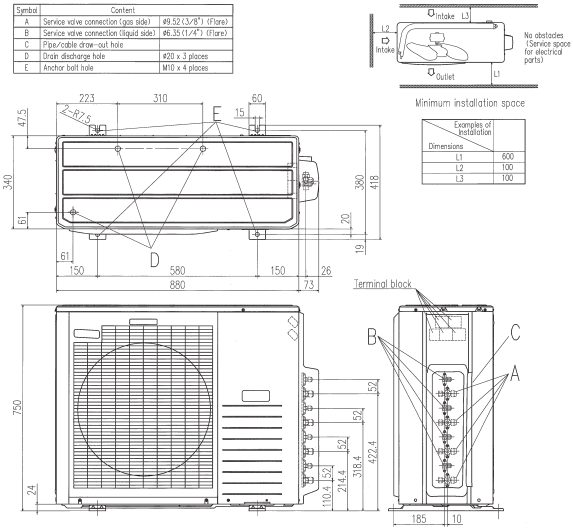

SCM60ZJ-S1

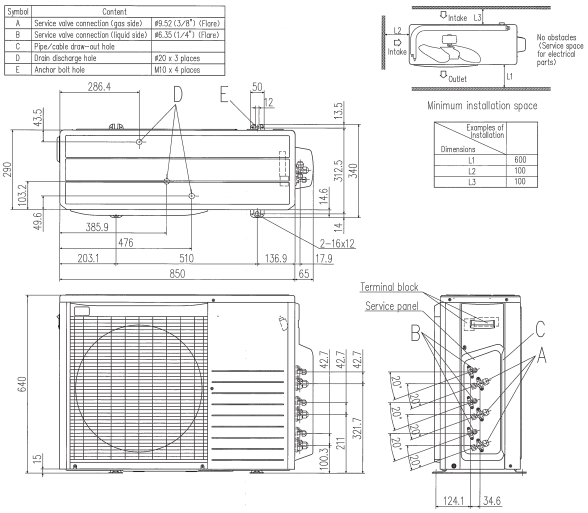

SCM100ZJ-S1

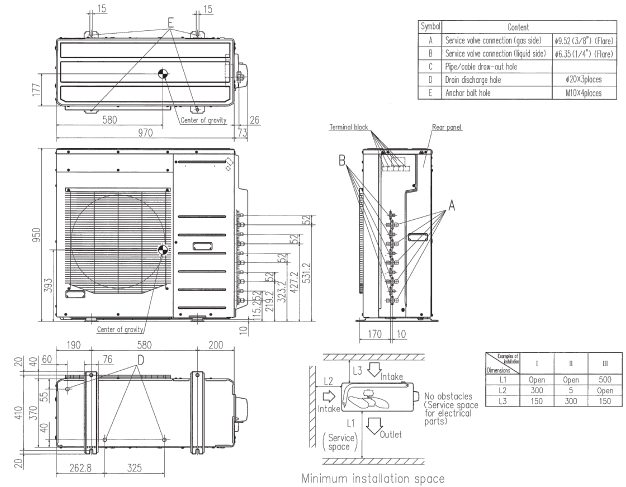

SRC71ZM-S

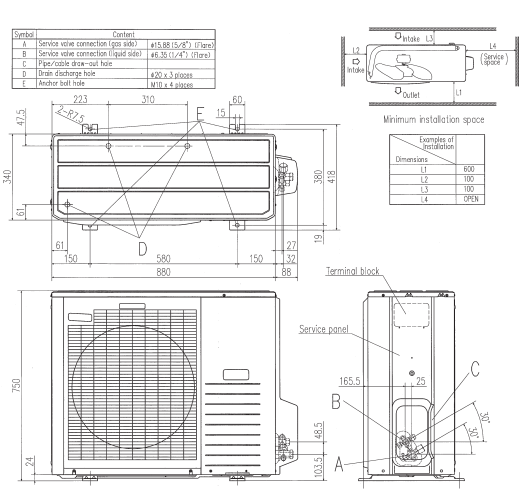

SCM125ZJ-S1

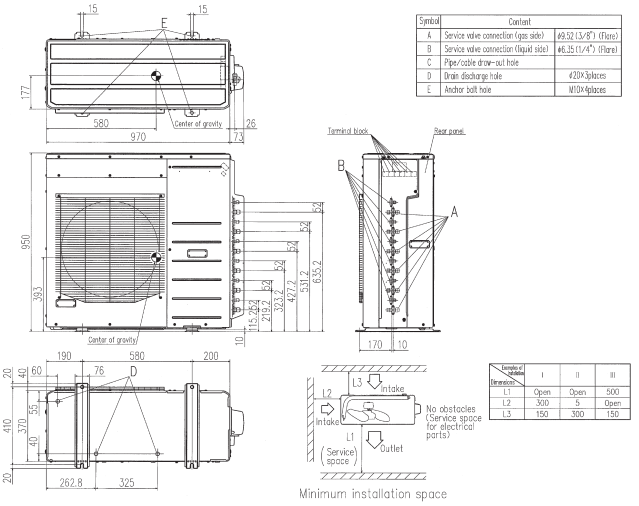

Before starting use

Heating performance
The heating performance values (kW) described in catalog are the values obtained by operating at an outdoor temperature of 7C and indoor temperature of 20C as set forth in the ISO Standards. As the heating performance decreases as the outdoor temperature drops, if the outdoor temperature is too low and the heating performance is insufficient, use other heating appliances as well.

Indication of sound values
The sound values are the values (A scale) measured in a chamber such as an anechoic chamber following the ISO Standards. In the actual installation state, the value is normally larger than the values given in the catalog due to the effect of surrounding noise and echo. Take this into consideration when installing.

Use in oil atmosphere
Avoid installing this unit in as atmosphere where oil scatters or builds up, such as in a kitchen or machine factory.
If the oil adheres to the heat exchanger, the heat exchanging performance will drop, mist may be generated, and the synthetic resin parts may deform and break.

Use in acidic or alkaline atmosphere
If this unit is used in acidic atmosphere such as hot spring areas having high level of sulfuric gases or in alkaline atmosphere including ammonia or calcium chloride, places where the exhaust of the heat exchanger is sucked in, or at coastal areas where the unit is subject to salt breezes, the outer plate or heat exchanger, etc., will corrode. Please ask a dealer or specialist when you use an air conditioner in places differing from a general atmosphere.

Use in places with high ceilings
If the ceiling is high, install a circulator to improve the heat and air flow distribution when heating.

Refrigerant leakage
The refrigerant (R410A) used for the Residential Air conditioner is non-toxic and inflammable in its original state.
However, in consideration of a state where the refrigerant leaks into the room, measures against refrigerant leaks must be taken in small rooms where the tolerable level could be exceeded. Take measures by installing ventilation devices, etc.

Use in snowy areas
Take the following measures when installing the outdoor unit in snowy areas.

- **Snow-prevention**
  Install a snow-prevention hood so that the snow does not obstruct the air intake port or enter and freeze in the outdoor unit.

- **Snow piling**
  In areas with heavy snow fall, the piled snow could block the air intake port. In this case, a frame that is 50cm or higher than the estimated snow fall must be installed underneath the outdoor unit.

Automatic defrosting device
If the temperature is low, and the humidity is high, frost will stick to the heat exchanger of the outdoor unit. If use is continued, the heating performance will drop.
The "Automatic defrosting device" will function to remove this frost.
After heating for approx, three to ten minutes, it will stop, and the frost will be removed. After defrosting, hot air will be blown again.

Servicing the air-conditioner
After the air-conditioner is used for several seasons, dirt will build up in the air-conditioner causing the performance to drop. In addition to regular servicing, we recommend the maintenance contract (charged for) by a specialist.

⚠ Safety Precautions

Air-conditioner usage target
The air-conditioner described in this catalog is a dedicated cooling/heating device for human use.
Do not use it for special applications such as the storage of foodstuffs, animals or plants, precision devices or valuable art, etc.
This could cause the quality of the items to drop, etc.
Do not use this for cooling vehicles or ships. Water leakage or current leaks could occur.

Before use
Always read the "User's Manual" thoroughly before starting use.

Installation
Always commission the installation to a dealer or specialist. Improper installation will lead to water leakage, electric shocks and fires.
Make sure that the outdoor unit is stable in installation. Fix the unit to stable base.

Usage place
Do not install in places where combustible gas could leak or where there are sparks.
Installation in a place where combustible gas could be generated, flow or accumulate, or places containing carbon fibers could lead to fires.

MITSUBISHI HEAVY INDUSTRIES, LTD.

Our factories are ISO9001 and ISO14001 certified.

Certified ISO 9001

BIWAJIMA PLANT
Mitsubishi Heavy Industries, Ltd.
Air-conditioning & Refrigeration Systems Headquarters
Certified ISO 9001
Certificate number : JQA-0709

MITSUBISHI HEAVY INDUSTRIES-MAHAJAK AIR CONDITIONERS CO., LTD.
Certified ISO 9001
Certificate Number : 04100 1998 0813

Certified ISO 14001

BIWAJIMA PLANT
Mitsubishi Heavy Industries, Ltd.
Air-conditioning & Refrigeration Systems Headquarters
Certified ISO 14001
Certificate number : JQA-EM0256

MITSUBISHI HEAVY INDUSTRIES-MAHAJAK AIR CONDITIONERS CO.,LTD.
Certificate Number : 04104 1998 0813 ES

Exclusive Distributor
Wo Kee Hong Marketing Pte Ltd
(Member of KM Capital Pte Ltd)
No.1 Jalan Kilang Timor #08-03 Pacific Tech Centre Singapore 159303
Tel: (65) 6376 0338 Fax: (65) 6376 0166
Email: pacwkhs@wokeehong.com.sg Website: www.wokeehong.com.sg

Dealer:

Because of our policy of continuous improvement, we reserve right to make changes in all specifications without notice.