MITSUBISHI
HEAVY INDUSTRIES, LTD.

Our Technologies, Your Tomorrow

R410A

High Performance Air-Conditioning 2015



New KXZ

VRF inverter multi-system Air-Conditioners

CE

50Hz

15KX01E

High Performance Air-Conditioning 2015



New

KXZ

INSTALLATION FLEXIBILITY

KXZ Product Line is extended up to 60HP with combination of 3 outdoor units



Line Up



Micro model



KXZ Lite



KXZ

Contents

Introduction	4~15
Outdoor units	16~39
Indoor units	40~75
EEV-KIT	76·77
Control systems	78~87
Standard Large connection	88~91
Corrosion Protection Treatment series	92·93
Water cooled series	94·95
High Head series	96~99
Refresh series	100·101
Further information	102~105

Product Line Up

Product lineup has been extended up to 60HP with combination of 3 outdoor units.

Furthermore Hi-COP series has been added to our advanced technology.

Previous
Up to 48HP

KXZE1
Up to 60HP

KXZXE1
8~36HP

<Outdoor units>

from 11.2kW up to 168.0kW

Capacity	4HP	5HP	6HP	8HP	10HP	12HP	14HP	16HP	17HP	18HP	20HP
Model Code : kW	11.2	14	15.5	22.4	28	33.5	40.0	45.0	47.5	50.0	56.0
BTU / h	38,200	47,800	52,900	76,400	95,500	114,300	136,500	153,500	162,100	170,600	191,100
kcal / h	9,600	12,000	13,300	19,300	24,100	28,800	34,400	38,700	40,900	43,000	48,200

Capacity	22HP	24HP	26HP	28HP	30HP	32HP	34HP	36HP	38HP	40HP
Model Code : kW	61.5	67.0	73.5	80.0	85.0	90.0	95.0	100.0	106.0	112.0
BTU / h	209,800	228,600	250,800	273,000	290,000	307,100	324,100	341,200	361,700	382,100
kcal / h	52,890	57,600	63,200	68,800	73,100	77,400	81,700	86,000	91,200	96,300

Capacity	42HP	44HP	46HP	48HP	50HP	52HP	54HP	56HP	58HP	60HP
Model Code : kW	120.0	125.0	130.0	135.0	142.5	145.0	150.0	156.0	162.0	168.0
BTU / h	409,400	426,500	443,600	460,600	486,200	494,700	511,800	532,200	552,700	573,200
kcal / h	103,200	107,500	111,800	116,100	122,600	124,700	129,000	134,200	139,300	144,500

Micro model



4HP	5HP	6HP
FDC112KXEN6	FDC140KXEN6	FDC155KXEN6
FDC112KXES6	FDC140KXES6	FDC155KXES6

☐ 1-phase 220-240V
☐ 3-phase 380-415V



8HP	10HP	12HP
FDC224KXE6G	FDC280KXE6G	FDC335KXE6G

NEW

KXZ Lite

Tropical Usage mode



8HP	10HP
FDC224KXZPE1	FDC280KXZPE1

NEW

Standard model KXZE1



10HP	12HP	14HP	16HP
FDC280KXZE1	FDC335KXZE1	FDC400KXZE1	FDC450KXZE1

17HP	18HP	20HP
FDC475KXZE1	FDC500KXZE1	FDC560KXZE1



22HP	24HP	26HP	28HP	30HP	32HP
FDC615KXZE1	FDC670KXZE1	FDC735KXZE1	FDC800KXZE1	FDC850KXZE1	FDC900KXZE1
10+12	12+12	12+14	14+14	14+16	16+16
FDC280KXZE1 FDC335KXZE1	FDC335KXZE1 FDC335KXZE1	FDC335KXZE1 FDC400KXZE1	FDC400KXZE1 FDC400KXZE1	FDC400KXZE1 FDC450KXZE1	FDC450KXZE1 FDC450KXZE1

34HP	36HP	38HP	40HP
FDC950KXZE1	FDC1000KXZE1	FDC1060KXZE1	FDC1120KXZE1
17+17	18+18	18+20	20+20
FDC475KXZE1 FDC475KXZE1	FDC500KXZE1 FDC500KXZE1	FDC500KXZE1 FDC560KXZE1	FDC560KXZE1 FDC560KXZE1



42HP	44HP	46HP	48HP	50HP	52HP
FDC1200KXZE1	FDC1250KXZE1	FDC1300KXZE1	FDC1350KXZE1	FDC1425KXZE1	FDC1450KXZE1
14+14+14	14+14+16	14+16+16	16+16+16	17+17+17	17+17+18
FDC400KXZE1 FDC400KXZE1 FDC400KXZE1	FDC400KXZE1 FDC400KXZE1 FDC450KXZE1	FDC400KXZE1 FDC450KXZE1 FDC450KXZE1	FDC450KXZE1 FDC450KXZE1 FDC450KXZE1	FDC475KXZE1 FDC475KXZE1 FDC475KXZE1	FDC475KXZE1 FDC475KXZE1 FDC500KXZE1

54HP	56HP	58HP	60HP
FDC1500KXZE1	FDC1560KXZE1	FDC1620KXZE1	FDC1680KXZE1
18+18+18	18+18+20	18+20+20	20+20+20
FDC500KXZE1 FDC500KXZE1 FDC500KXZE1	FDC500KXZE1 FDC500KXZE1 FDC560KXZE1	FDC500KXZE1 FDC560KXZE1 FDC560KXZE1	FDC560KXZE1 FDC560KXZE1 FDC560KXZE1

NEW

Hi-COP model KXZXE1



8HP	10HP	12HP
FDC224KXZXE1	FDC280KXZXE1	FDC335KXZXE1



16HP	18HP	20HP	22HP	24HP
FDC450KXZXE1	FDC500KXZXE1	FDC560KXZXE1	FDC615KXZXE1	FDC670KXZXE1
8+8	8+10	10+10	10+12	12+12
FDC224KXZXE1 FDC224KXZXE1	FDC224KXZXE1 FDC280KXZXE1	FDC280KXZXE1 FDC280KXZXE1	FDC280KXZXE1 FDC335KXZXE1	FDC335KXZXE1 FDC335KXZXE1



26HP	28HP	30HP	32HP	34HP	36HP
FDC735KXZXE1	FDC800KXZXE1	FDC850KXZXE1	FDC900KXZXE1	FDC950KXZXE1	FDC1000KXZXE1
8+8+10	8+10+10	10+10+10	10+10+12	10+12+12	12+12+12
FDC224KXZXE1 FDC224KXZXE1 FDC280KXZXE1	FDC224KXZXE1 FDC280KXZXE1 FDC280KXZXE1	FDC280KXZXE1 FDC280KXZXE1 FDC280KXZXE1	FDC280KXZXE1 FDC280KXZXE1 FDC335KXZXE1	FDC280KXZXE1 FDC335KXZXE1 FDC335KXZXE1	FDC335KXZXE1 FDC335KXZXE1 FDC335KXZXE1

<Indoor units>



Wide variety of 17 types 92 models

A range of 17 types of exposed or concealed indoor units available in a wide range of capacities (total 92 indoor models). The best solution of indoor units for all applications is available from our full lineup.

Indoor units lineup

Type			Capacity	0.5HP	0.8HP	1HP	1.25HP	1.6HP	2HP	2.5HP	3.2HP	4HP	5HP	6HP	8HP	10HP
			Model Code : kW	15	22	28	36	45	56	71	90	112	140	160	224	280
Ceiling Cassette	4way	FDT				●	●	●	●	●	●	●	●	●		
	4way Compact (600 x 600)	FDTC		●	●	●	●	●	●							
	2way	FDTW				●		●	●	●	●	●	●			
	1way	FDTS						●		●						
	1way Compact	FDTQ			●	●	●									
Duct Connected	High Static Pressure	FDU	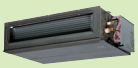					●	●	●	●	●	●	●	NEW ●	NEW ●
	Low/Middle Static Pressure	FDUM			●	●	●	●	●	●	●	●	●	●		
	Low Static Pressure (thin)	FDUT	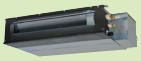	●	●	●	●	●	●	●						
	Compact & Flexible	FDUH			●	●	●									
Wall Mounted		FDK			●	●	●	●	●	●						
Ceiling Suspended		FDE					●	●	●	●		●	●			
Floor Standing	2way	FDFW				●		●	●							
	with casing	FDFL								●						
	without casing	FDFU				●		●	●	●						
OA Processing unit		FDU-F	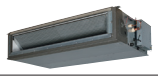								NEW ●		NEW ●		NEW ●	NEW ●

Type		Air flow M³/h	150	250	350	500	650	800	850	1000	1300	1800
Fresh Air Ventilation and Heat Exchange unit	SAF		●	●	●	●	●	●		●		
Fresh Air DX Assembly	SAF-DX	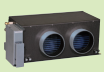		●	●	●		●		●		

1. High Efficiency & Compact Design

High efficiency and compact design are realized by applying various advanced components

10~60HP (KXZ)

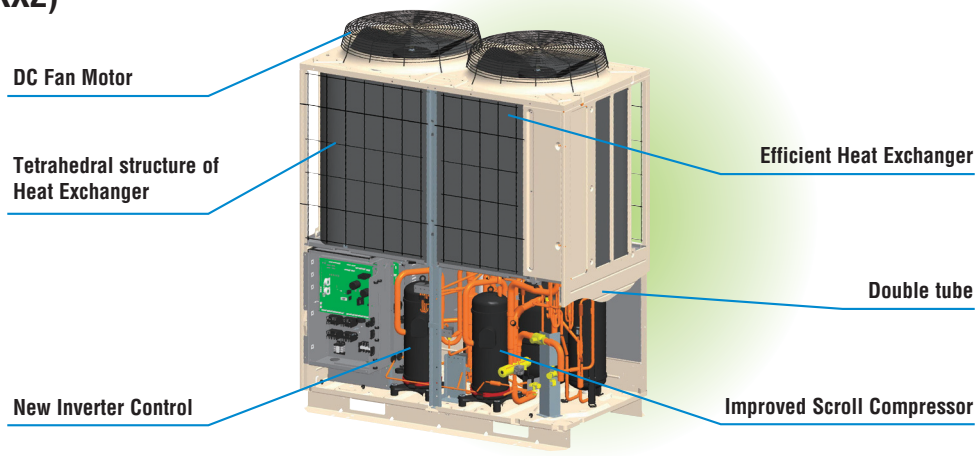

Multiport compressor that achieves high efficiency (KXZ, KXZ Lite)

The new multiport discharge area in the compressor has optimized pressure control with better balancing. The performance improvement at medium Hz has resulted in higher annual efficiencies.

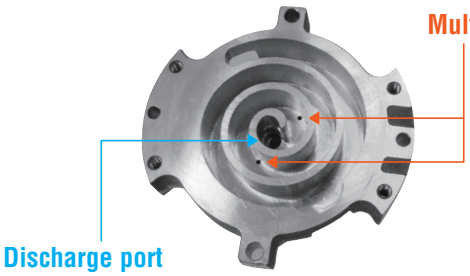

By optimizing pressure adjustment in decompression, the compressor realizes higher efficiency.

Concentrated winding motor achieves "High Output" and "Total Efficiency Improvement"

The newly designed high performance CPU enables high precision optimization for compressor speed, which leads to concentrated winding motor use.
Our product achieves high output and better energy saving effects and in particular improves seasonal efficiency rating.

Total Efficiency

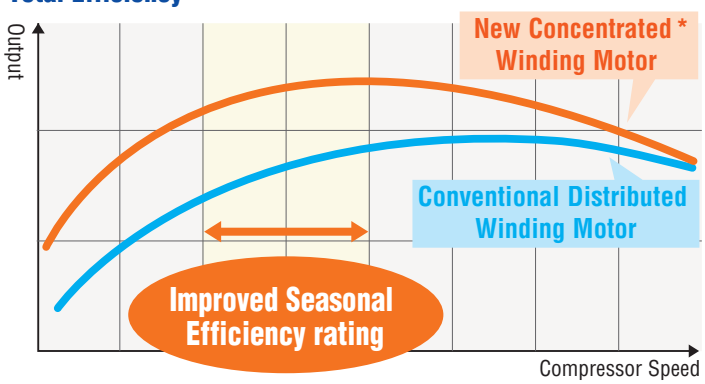

*Applied for KXZE1:10/12/17/18/20HP, KXZXE1:8HP & KXZ Lite:8/10HP

Improved Heat-exchanger

With piping layout rearranged from header to heat exchanger, refrigerant distribution flow has improved and maximum energy efficiency has been achieved. Heat exchanger has improved refrigerant distribution and increased effectiveness.
Furthermore due to expansion of effective heat transfer area in heat exchanger, energy efficiency has increased.

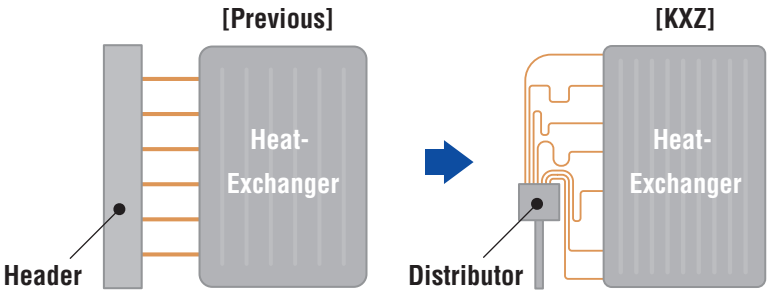

Strengthened resistance against frost

Resistance against frost has been strengthened by achieving improved heat-exchanger.

VTCC : Variable Temperature and Capacity Control (KXZ)

Normal operation (in the cooling mode)

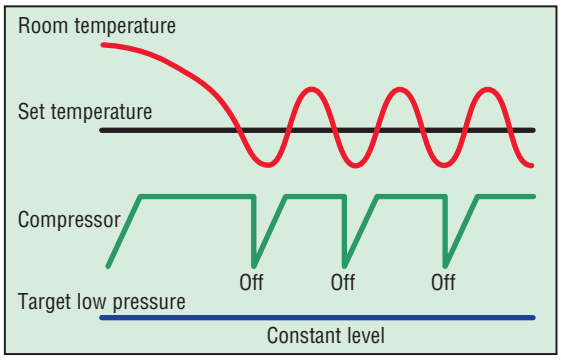

Target low pressure was set at the constant level. When room temperature got closer to set temperature, the compressor shifted operation and repeated on-off operation continuously.

Energy saving operation (in the cooling mode)

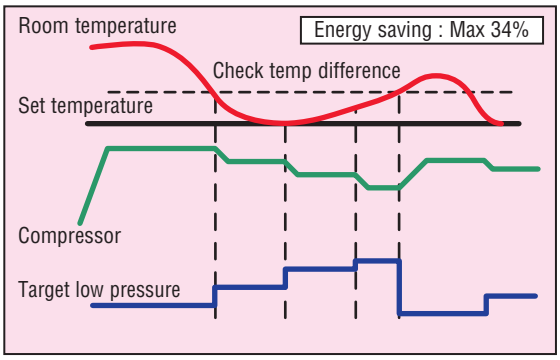

Checking the difference between room and set temperatures, the system adjusts compressor speed and target low pressure effectively. Meeting customer's requirement, manual adjustment is available.
(Need to set 7-segment or external input)

Oil level control capability

Our proprietary technology of adjusting oil level for combination of two or three outdoor units has realized leveled operation rate, keeping performance of the units and ensuring long life of the system.

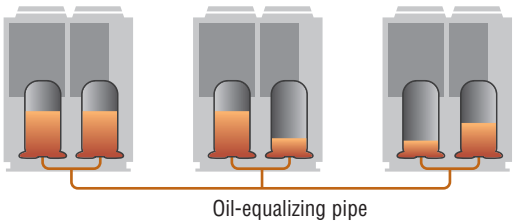

Capacity control (KXZ)

Capacity control can be set by peak cut function with RC-EX1A for better energy saving.
Five-step capacity control is available.
(100-80-60-40-0%)

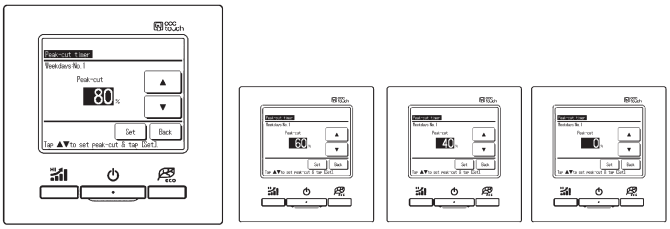

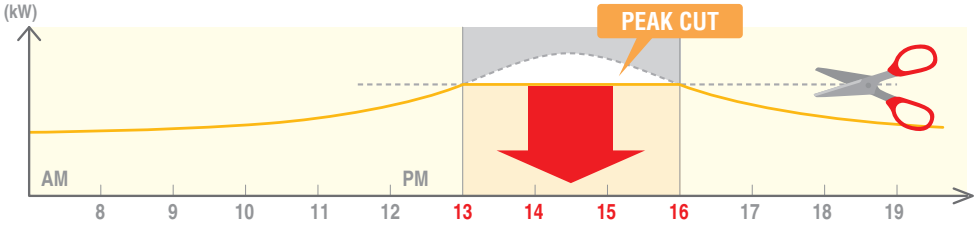

Vector control

New applied Vector control has a high efficiency and many new advanced features.

- Smooth operation from low speed to high speed
- Smooth Sine Voltage Wave form are attained
- Energy efficiency is further improved in low speed range

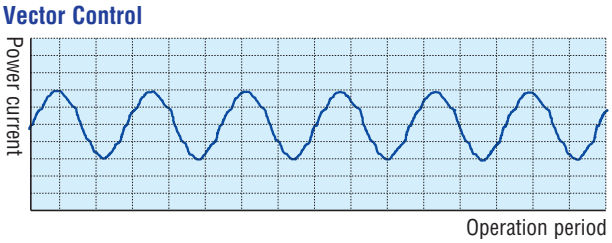

Long-chorded 3 propeller fan with serration

Fan blade design adapted from MHI's aerospace division - with serrated edges that deliver increased air volume with less power input.

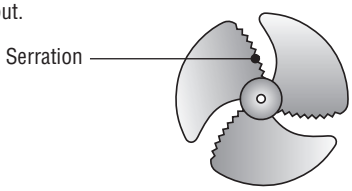

DC Fan Motor

Employment of DC fan motor has enabled to realize an excellent efficiency of approximate 60% higher than previous models.

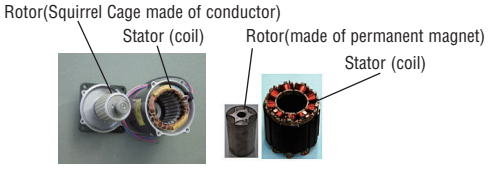

4~6HP (Micro)

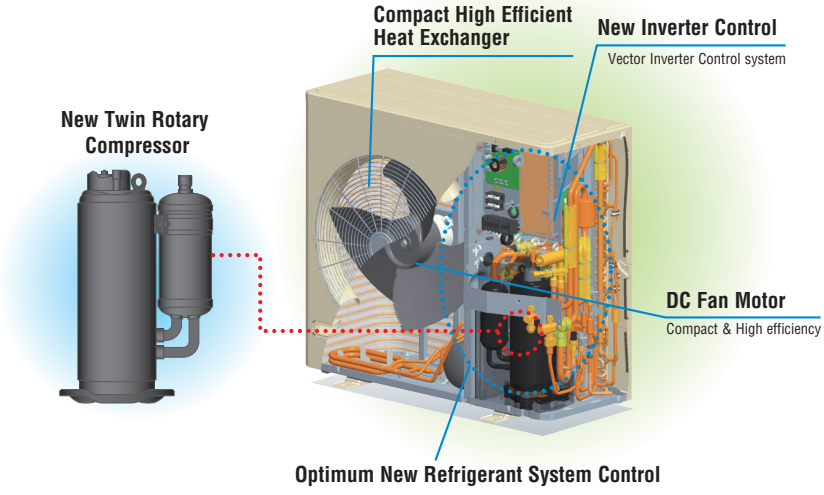

Compact high efficiency Heat Exchanger

- Optimizing relationship of the air flow velocity & fin pattern
- Improvement of air distribution Maximizing efficiency of heat exchanger

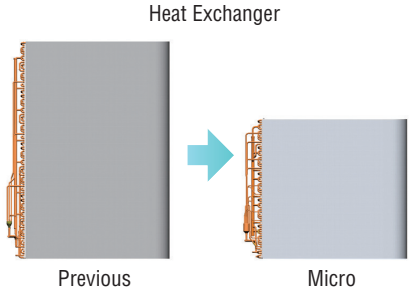

8~12HP (Micro)

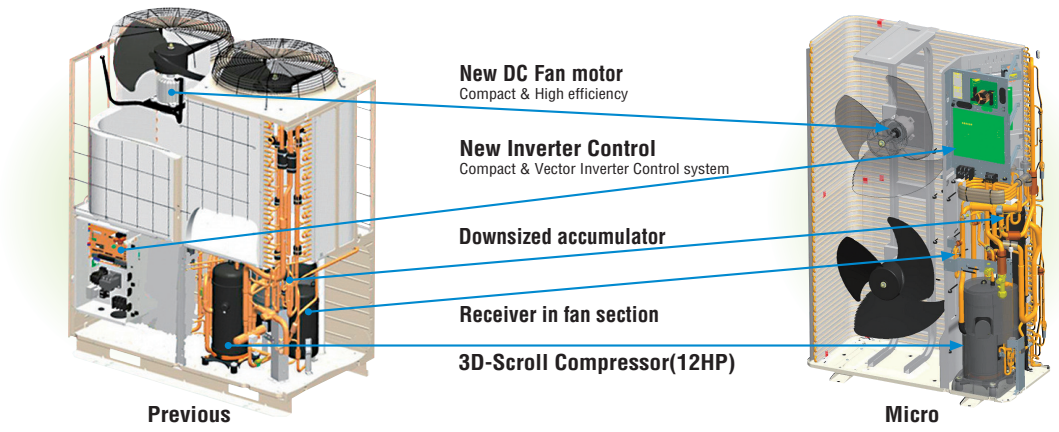

2. Design Flexibility

Indoor unit capacity connection

	HP	Capacity connection
Micro model	4~12	150%
KXZ Lite	8·10	120%
KXZE1	10~60	130%

Capacity connection of Hi-COP KXZXE1 series &
KX2 Standard large connection series is 160~200%.
Please refer to page 32 & 88 for the detail.

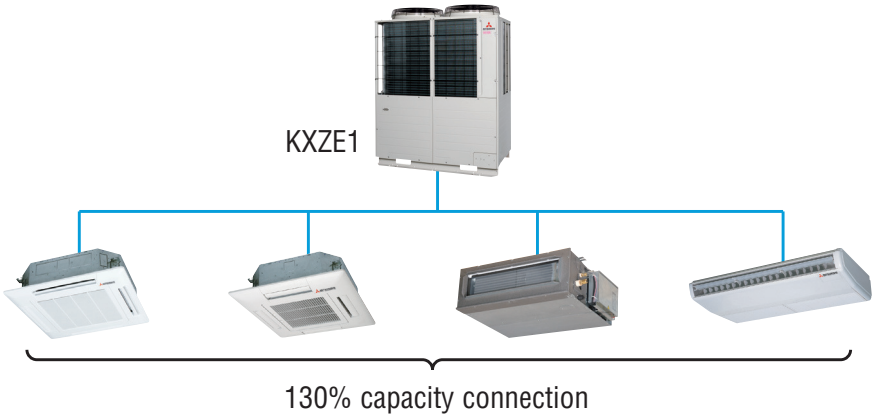

Connectable indoor units

Micro model	HP	4	5	6	8	10	12								
	Numbers	6	8	8	22	24	24								
KXZ Lite	HP	8	10												
	Numbers	8	8												
Standard KXZE1	HP	10	12	14	16	17	18	20	22	24	26	28	30	32	34
	Numbers	24	29	34	39	41	43	48	53	58	63	69	73	78	80
	HP	36	38	40	42	44	46	48	50	52	54	56	58	60	
	Numbers	80	80	80	80	80	80	80	80	80	80	80	80	80	

Control Systems

All series offer wide variation of control system and provide the best solution.

[Control system units with SUPERLINK-Ⅱ]

Classification	Type		Model	Connectable Indoor units (Maximum)	Electric power calculation
Individual controller	Wired		RC-E5	1	—
			RC-EX1A	1	—
	Wireless		RCN-T-36W-E etc.	1	—
Center Console	Push buttons		SC-SL1N-E	16	—
			SC-SL2NA-E	64	—
	Touch screen		SC-SL4-AE	128	—
			SC-SL4-BE	128	●
	PC windows interface units		SC-WGWNB-A	128(64x2)	—
			SC-WGWNB-B	128(64x2)	●
	BMS interface units	BACnet	SC-BGWNA256-A	256(128x2)	—
			SC-BGWNA256-B	256(128x2)	●
			SC-BGWNA-A	128(64x2)	—
			SC-BGWNA-B	128(64x2)	●
		Lonworks	SC-LGWNA-A	96(48x2)	—

Long Pipe Length 10~60HP(KXZ)

Piping length has extended max height difference between indoor units up to 18m and enables us to put indoor units on extra three floors. The furthest indoor unit: 160m or total length: 1000m contributes to system design flexibility.

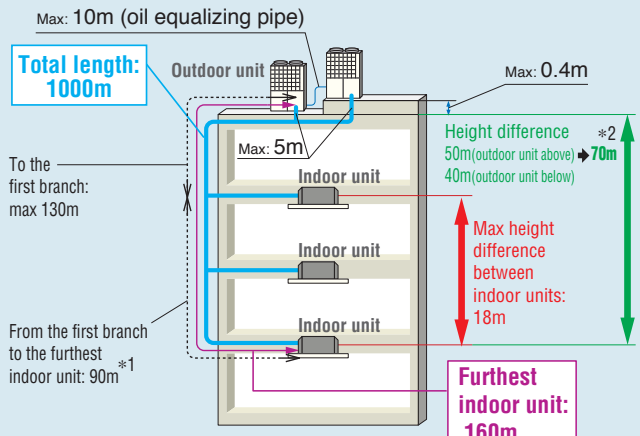

*1 The difference between the longest and the shortest indoor unit piping from the first branch must be within 40m. (MAX85m)
*2 In case of height difference up to 70m, please contact your dealer. Height difference up to 100m is possible with High Head series. Please refer to page 96.

Easy Transportation & Installation

Due to realization of significant reduction in size and foot print which is one of the smallest in the industry, transportation in an elevator made for six persons (Width:1400mm, Depth:850, Open area:800mm) is possible, eliminating cost of a crane and reducing labor.



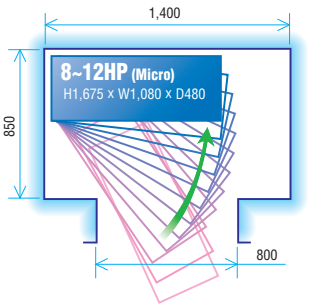

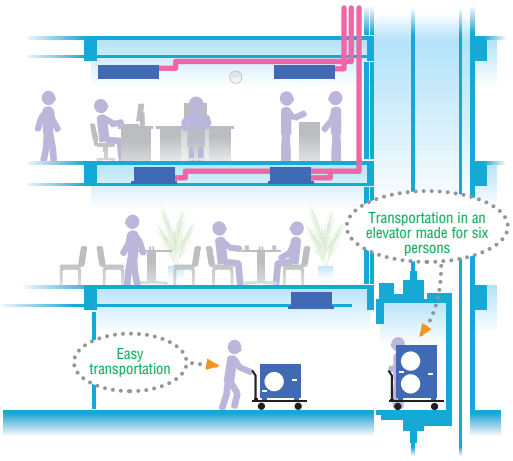

KXZ is portable and the uniform reduced footprint allows neat, continuous installation.



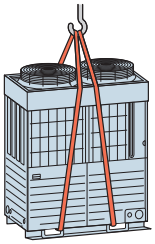



Wide Range of Operation (KXZ, KXZ Lite)

KXZ series permits an extensible system design considering a heating range operation under a low temperature condition down to -20˚C and a cooling range operation up to 46˚C (previous model : 43˚C) Furthermore KXZ Lite extends a cooling range operation up to 50˚C.

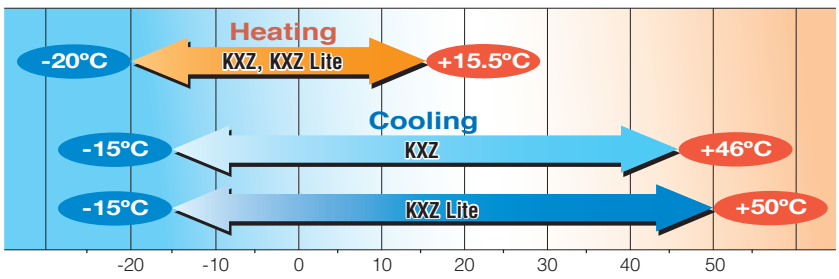

Automatic Select functions for capacity control (KXZ Lite)

The following 3 items are available for capacity control function.
You can select one item individually or select 2or3 items at the same time.
In case of selecting 2or3 items, the unit will operate with the most effective function automatically.

Compressor speed control

You can set compressor speed at 100%-80%-60%-40% before starting operation with PWB in the outdoor unit or with a demand controller (procured locally).

How to set "Compressor speed"

- 1 Set the function of external input (CNS1) to "Capacity control input" using P07 of 7SEG setting.
- 2 Set the Demand rate using SW4-7, 4-8 according to the following chart.
- The input signal will be through 3 CNS1. ON/ connected, OFF/ not connected

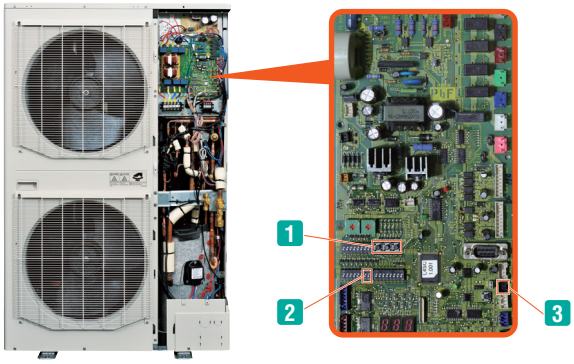

SW4-7	SW4-8	Compressor speed
OFF	OFF	80%
ON	OFF	60%
OFF	ON	40%
ON	ON	0%

Capacity control timer

You can set※ capacity control with RC-EX1A up to 4 times per day maximum.
The timer setting can be changed using 5 minute intervals.

※Please refer to page 8.

Silent mode

Considering noise regulations or surrounding circumstances, you can now select 4 levels of silent mode. [1] & [2]
Setting the combination of silent mode is available by using timer function of RC-EX1A.

- Silent mode [1] : Priority for capacity
  This is an effective function during low load operation conditions.
  This setting may be cancelled in overload conditions.

- Silent mode [2] : Priority for silent mode
  Regardless of operation conditions, the outdoor unit will keep the operation at the selected sound level.

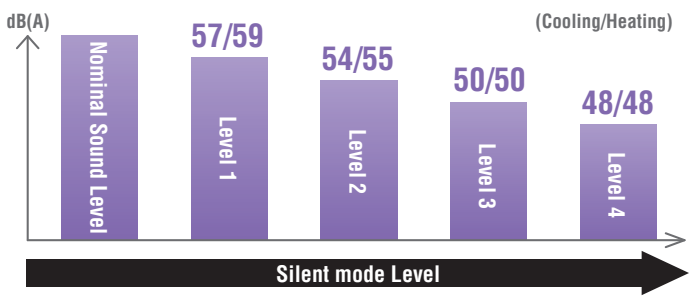

3. Serviceability

Easy Service

Quick and easy access to service parts by separation of compartments.

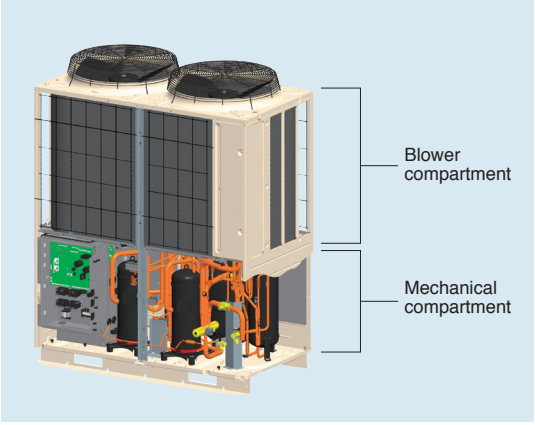

Check Operation (10~60HP)

Closing of Service valve, crossing connection of refrigerant piping and electrical wiring, proper operation of EEV (Electrical Expansion Valve) can be checked automatically in cooling operation. This check operation can be done at 0~43°C outdoor temperature and 10~32°C indoor temperature by use of outdoor unit dip switch. The check should be done in one refrigerant system. It takes 15~30 minutes and avoids frequent failure by preventing careless mistakes during installation.

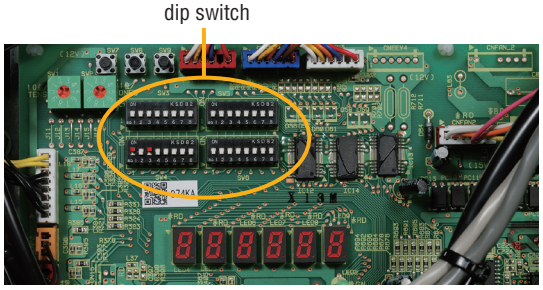

Monitoring Function

All series includes new feature to assist with servicing and trouble shooting.
Various data can be monitored through 3-digit or 6-digit display on the outdoor unit PCB.

Detailed fault diagnosis and operation history memory via 7-segment display.

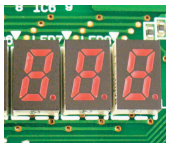

4~6HP
8·10HP(KXZ Lite)

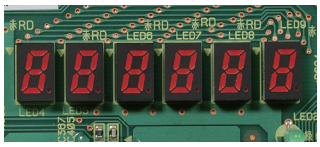

8~60HP

Equipped with RS232C for connection directly to your PC monitoring and service tasks made simple with our service software (“Mente PC”).
All series

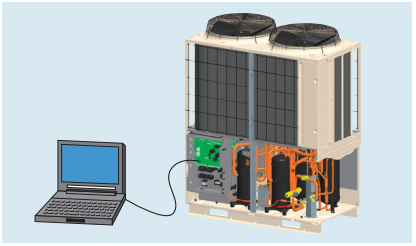

Back-up Operation

In the event that one unit has a failure, the system will keep operating with the other good units.

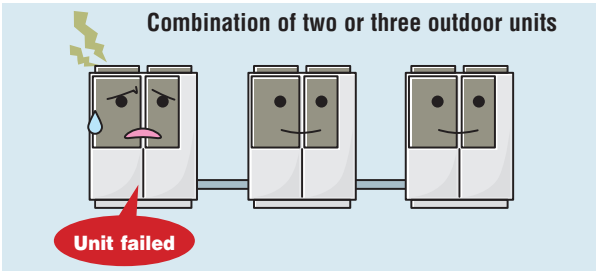

In the event that one compressor has a failure, the unit will keep operating with the another good compressor.

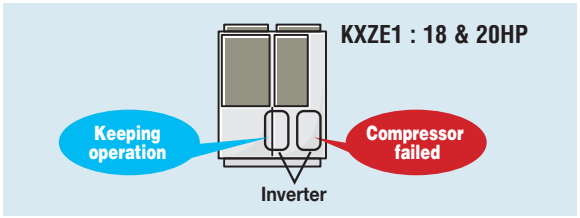

This operation is an emergency measure for a limited time and a necessary repair should be done as soon as possible.

3 Layer Construction

Thanks to control box structure with 3 layer/2 layer construction using hinge connection, service and maintenance has been made much easier for inverter components.



KXZ
(3 layer)



KXZ Lite
(2 layer)

Blue Fin

Due to application of blue coated fins for the heat exchanger of new outdoor unit, corrosion resistance has been improved compared to current models.

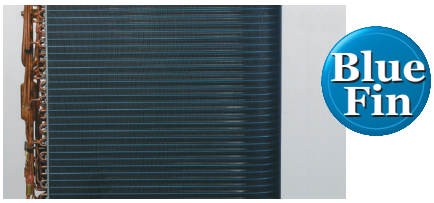

Improved features (KXZ Lite)

Improved freedom of piping layout

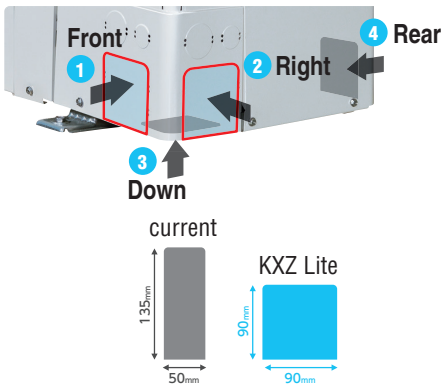

Hole size becomes 120% bigger.

Wire insertion holes for fall prevention



External static pressure



External static pressure is available up to 35 Pa.

Four handles

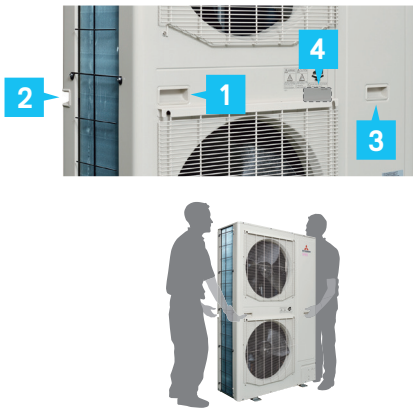

Located at the same level for easy transport and transfer.

A transparent rain cover

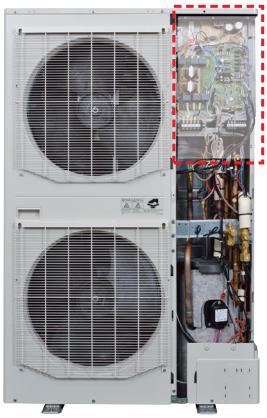

Attached as a standard for easy maintenance.

Fixing screws to service panel

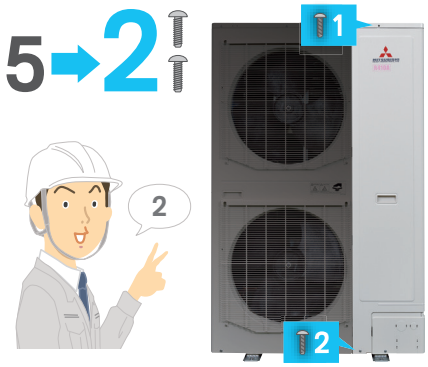

Decreasing number of screws from 5 to 2, installation & service speed is improved.

Compact design



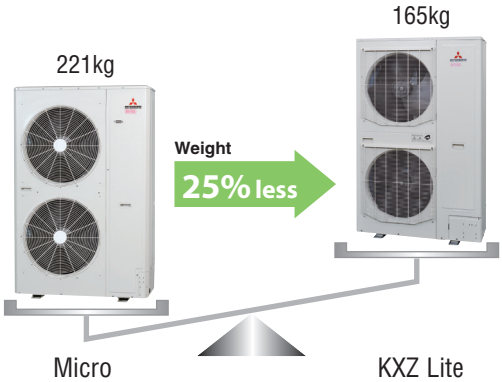

Heat pump systems

The heat pump systems operate with 2 inter-connecting pipes, thus commonly referred to as a '2-pipe system'.

These systems provide either a heating or cooling operation to all indoor units and are suitable for a wide range of applications from an individual apartment to an entire multi storey building, especially where there are significant open plan areas to be controlled.

The range starts with a 11.2kW cooling capacity, up to 20HP with 56.0kW cooling capacity. Outdoor units can also be “twinned” or “tripled” providing up to 60HP/168.0kW on a single system.

The range has a total piping length of 1000m (KXZ) and the furthest indoor unit can be connected up to 160m (8HP+, KXZ, Micro) from the outdoor unit.

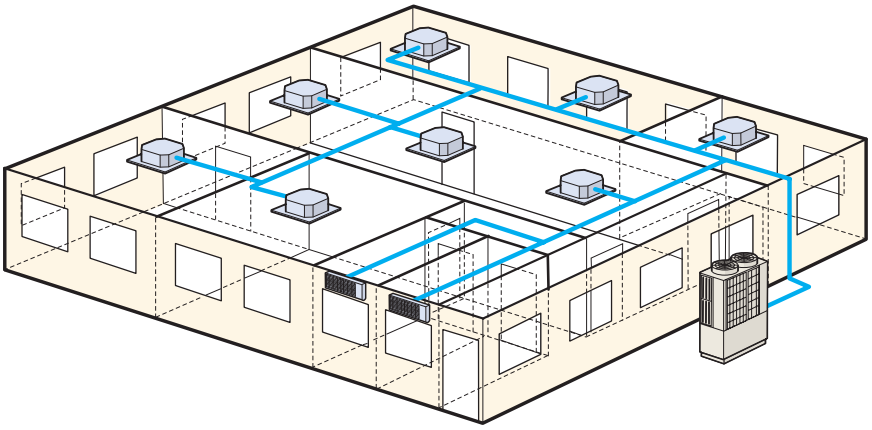

Fixed Cooling mode/fixed heating mode (summer/winter switch):
It is possible to fix the operational mode of the system (either cooling or heating) using a switch (SW3-7) on the outdoor unit PC board - this enables the building user to decide the operation of the system (e.g. cooling only in summer/heating only in winter), to avoid unnecessary energy wastage.
It is also possible to wire the control switch to a remote location (inside the building) to a control room, or even linked to an ambient thermostat.

Priority operation mode rule (KXZ, KXZ Lite)

You can select the following priority operation mode. (for whole system)

1. First unit’s operation mode (by default setting)
2. Last unit’s operation mode
3. Majority operation mode (see below)
4. Master operation mode (see below)

<Majority operation mode>

The system is operated according to the mode selected by the majority of units in operation (whichever greater capacity between the sums of cooling mode and heating mode).
The operation mode in minority is set to fan mode automatically.

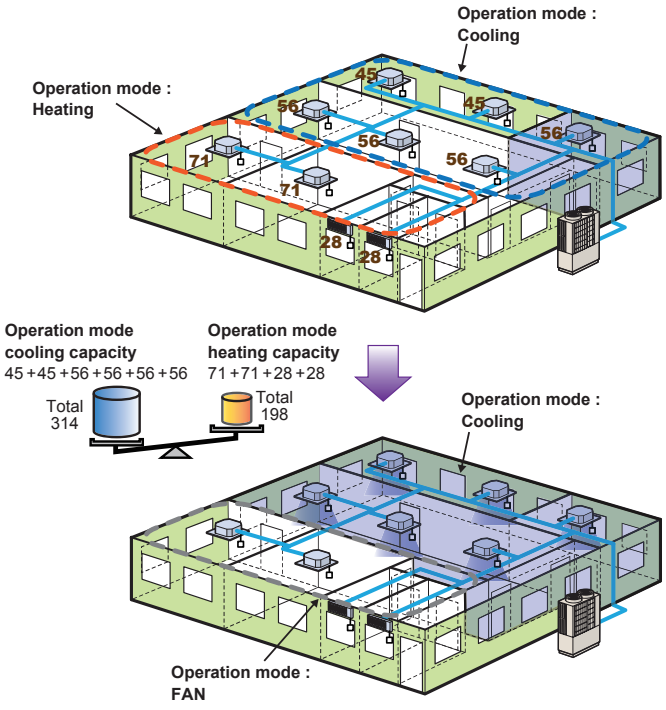

<Master operation mode>

The system is operated according to master operation mode.
When master operation mode is set at cooling mode, units selected as heating mode is set to fan mode automatically.

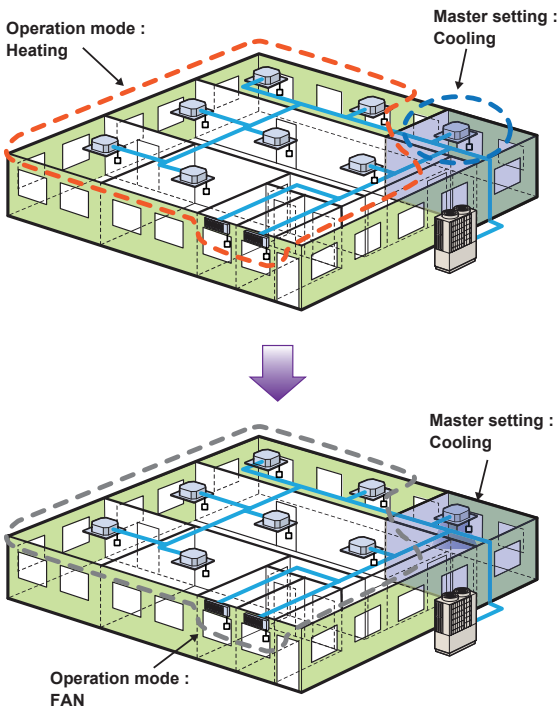

Micro Outdoor units
Heat pump systems 4, 5, 6HP (11.2kW~15.5kW)

Model No.	Nominal Cooling Capacity
FDC112KXEN6	11.2kW (1Phase)
FDC140KXEN6	14.0kW (1Phase)
FDC155KXEN6	15.5kW (1Phase)
FDC112KXES6	11.2kW (3Phase)
FDC140KXES6	14.0kW (3Phase)
FDC155KXES6	15.5kW (3Phase)



Blue Fin

- These heat pump 2-pipe systems offer high performance VRF for applications that require either cooling only or heating only, ideal for open plan areas.
- Connect up to 8 indoor units/up to 150% capacity.
- High efficiency with COP (in cooling) up to 4.0.
- These units employ DC inverter compressors ONLY.
- Industry leading total piping length up to 100m and a maximum pipe run of 70m.

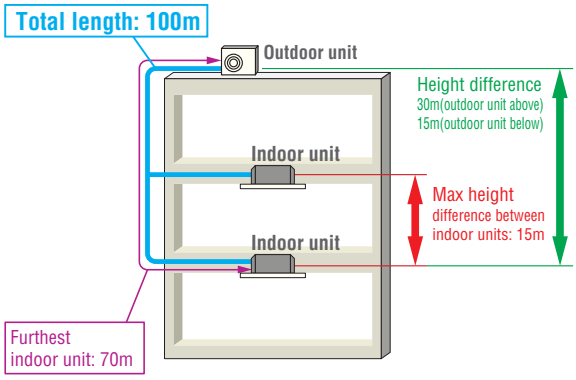

* The total length of ø9.52mm(3/8") liquid piping must be 50m or less

Range of operation

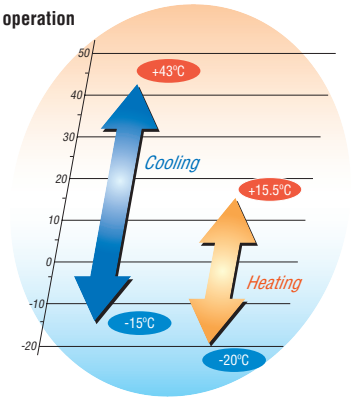

Note:FDUT15KXE6F-E and FDTC15KXE6F can not be connected to the above systems.

Specifications

Item			Model	FDC112KXEN6	FDC140KXEN6	FDC155KXEN6	FDC112KXES6	FDC140KXES6	FDC155KXES6
Nominal horse power				4HP	5HP	6HP	4HP	5HP	6HP
Power source				1 Phase 220-240V, 50Hz			3 Phase 380-415V, 50Hz		
Nominal capacity	Cooling		kW	11.2	14.0	15.5	11.2	14.0	15.5
	Heating			12.5	16.0	16.3	12.5	16.0	16.3
Electrical characteristics	Starting current		A	5					
	Power consumption	Cooling	kW	2.80	4.17	4.71	2.80	4.17	4.71
		Heating		2.89	4.31	4.38	2.89	4.31	4.38
	Running current	Cooling	A	13.5-12.4	20.6-18.9	23.3-21.3	4.5-4.1	6.9-6.3	7.8-7.1
		Heating		14.1-12.9	21.5-19.7	21.9-20.1	4.7-4.3	7.2-6.6	7.3-6.7
Exterior dimensions	HxWxD		mm	845x970x370					
Net weight			kg	85			87		
Refrigerant charge	R410A		kg	5.0					
Sound pressure level	Cooling/Heating		dB(A)	52/54	53/57	53/57	52/54	53/57	53/57
Refrigerant piping size	Liquid line		mm(in)	ø9.52(3/8")					
	Gas line			ø15.88(5/8")					
Capacity connection			%	80~150					
Number of connectable indoor units				6	8	8	6	8	8

1. The data are measured under the following conditions(ISO-T1). Cooling: Indoor temp. of 27ºCDB, 19ºCWB, and outdoor temp. of 35ºCDB. Heating: Indoor temp. of 20ºCDB, and outdoor temp. of 7ºCDB, 6ºCWB. Piping length is 7.5m.
2. Sound pressure level indicates the value in an anechoic chamber. During operation these values are somewhat higher due to ambient conditions.

Refrigerant piping

Outdoor unit (HP)		4	5	6
Gas pipe	Furthest indoor unit =<70m	ø15.88		
Liquid pipe		ø9.52		

Branch pipes

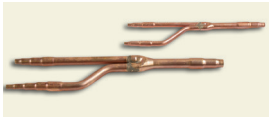

DIS-22-1G
DIS-180-1G

Header pipe



HEAD4-22-1G
HEAD6-180-1G

Dimensions

All measurements in mm.

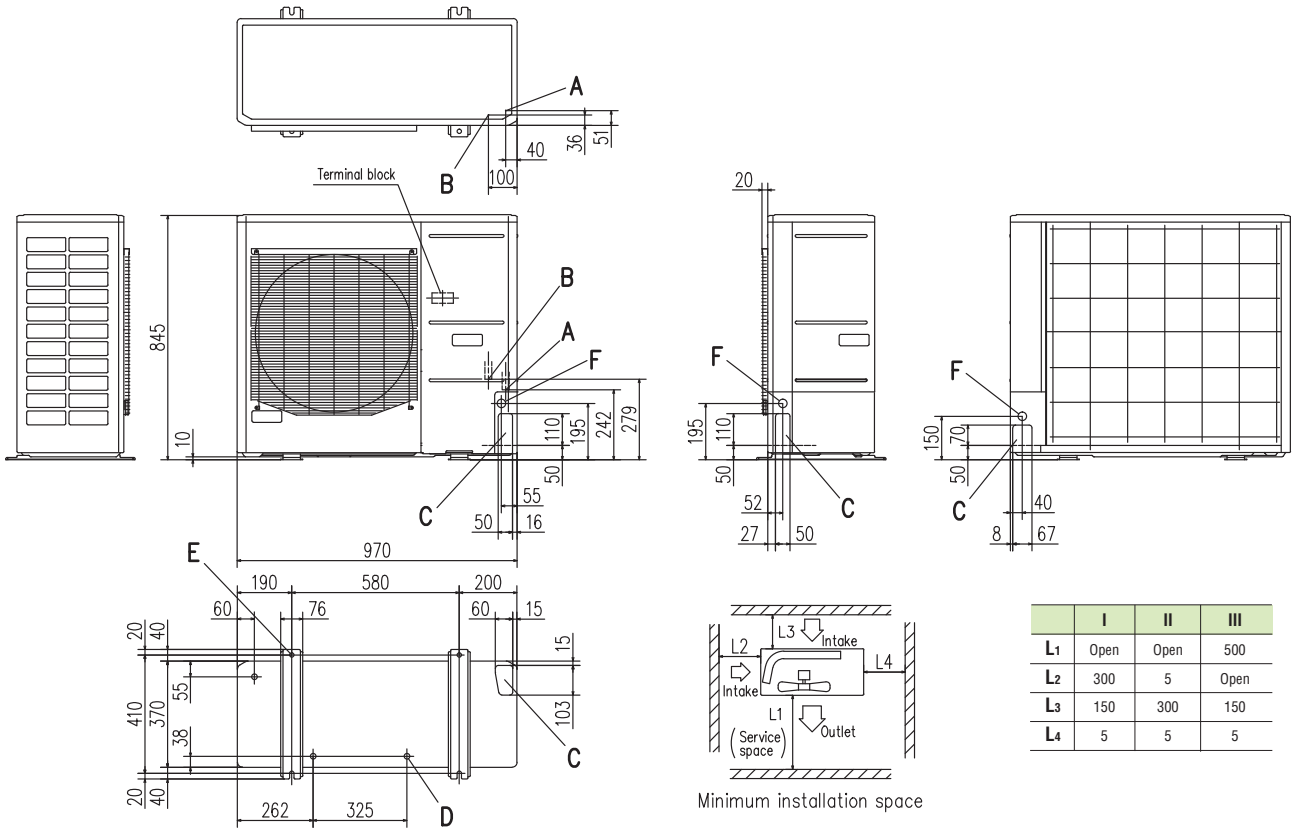

Minimum installation space

	I	II	III
L_1	Open	Open	500
L_2	300	5	Open
L_3	150	300	150
L_4	5	5	5

Mark	Content	
A	Service valve connection (gas side)	ø15.88 (5/8") (Flare)
B	Service valve connection (liquid side)	ø9.52 (3/8") (Flare)
C	Pipe/cable draw-out hole	
D	Drain discharge hole	ø20 x 3 places
E	Anchor bolt hole	M10 x 4 places
F	Cable draw-out hole	ø30 x 3 places

Notes:
(1) It must not be surrounded by walls on the four sides.
(2) The unit must be fixed with anchor bolts. An anchor bolt must not protrude more than 15mm.
(3) Where the unit is subject to strong winds, lay it in such a direction that the blower outlet faces perpendicularly to the dominant wind direction.
(4) Leave 1m or more space above the unit.
(5) A wall in front of the blower outlet must not exceed the units height.
(6) The model name label is attached on the lower right corner of the front panel.

Micro Outdoor units
Heat pump systems 8, 10, 12HP (22.4kW~33.5kW)

Model No.	Nominal Cooling Capacity
FDC224KXE6G	22.4kW
FDC280KXE6G	28.0kW
FDC335KXE6G	33.5kW



- These heat pump 2-pipe systems offer high performance VRF for applications that require either cooling only or heating only, ideal for open plan areas.
- Connect up to 24 indoor units/up to 150% capacity.
- High efficiency with COP (in cooling) up to 4.0.
- These units employ DC inverter compressors ONLY.
- Industry leading total piping length up to 510m and a maximum pipe run of 160m.

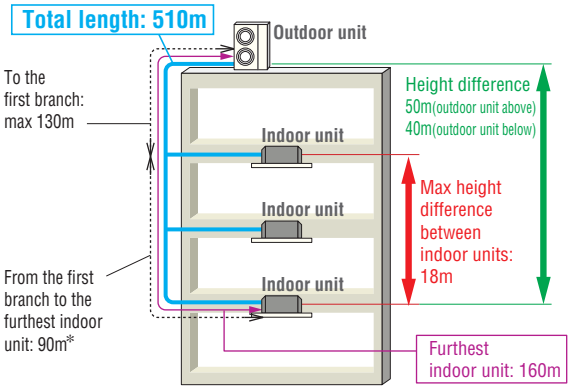

* The difference between the longest and the shortest indoor unit piping from the first branch must be within 40m.

Range of operation

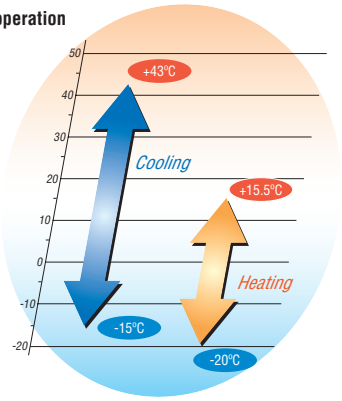

Specifications

Item			Model	FDC224KXE6G	FDC280KXE6G	FDC335KXE6G
Nominal horse power				8HP	10HP	12HP
Power source				3 Phase 380-415V, 50Hz		
Nominal capacity	Cooling		kW	22.4	28.0	33.5
	Heating			25.0	31.5	37.5
Electrical characteristics	Starting current		A	5		
	Power consumption	Cooling	kW	5.60	8.09	9.82
		Heating		6.03	8.21	10.12
	Running current	Cooling	A	9.25-8.47	13.22-12.10	15.87-14.53
		Heating		9.85-9.02	13.41-12.28	16.36-14.98
Exterior dimensions	HxWxD		mm	1675x1080x480		
Net weight			kg	221		224
Refrigerant charge	R410A		kg	11.5		
Sound pressure level	Cooling/Heating		dB(A)	58/58	59/60	61/61
Refrigerant piping size	Liquid line		mm(in)	ø9.52(3/8")		ø12.7(1/2")
	Gas line			ø19.05(3/4")	ø22.22(7/8")	ø25.4(1") [ø22.22(7/8")]
Capacity connection			%	50~150		
Number of connectable indoor units				22	24	24

1. The data are measured under the following conditions(ISO-T1). Cooling: Indoor temp. of 27°CDB, 19°CWB, and outdoor temp. of 35°CDB. Heating: Indoor temp. of 20°CDB, and outdoor temp. of 7°CDB, 6°CWB. Piping length is 7.5m.
2. Sound pressure level indicates the value in an anechoic chamber. During operation these values are somewhat higher due to ambient conditions.
3. [ ] : Pipe sizes applicable to European installations are shown in parentheses.

Refrigerant piping

Outdoor unit (HP)		8	10	12
Gas pipe	Furthest indoor unit =<90m	ø19.05	ø22.22	ø28.58
Liquid pipe		ø9.52		ø12.7
Gas pipe	Furthest indoor unit =<90m	ø22.22	ø28.58	
Liquid pipe		ø12.7		

Branch pipes

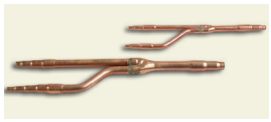

DIS-22-1G
DIS-180-1G

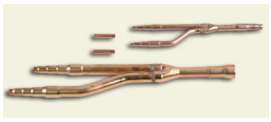

DIS-371-1G

Header pipe



HEAD4-22-1G
HEAD6-180-1G
HEAD8-371-2

Dimensions

All measurements in mm.

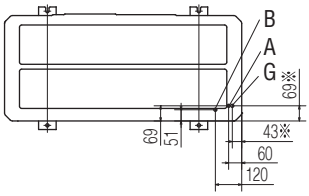

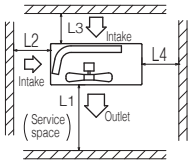

Minimum installation space

	I	II	II
L_1	Open	Open	1500
L_2	300	5	Open
L_3	300	300	300
L_4	5	5	5

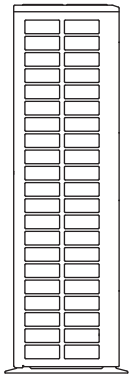

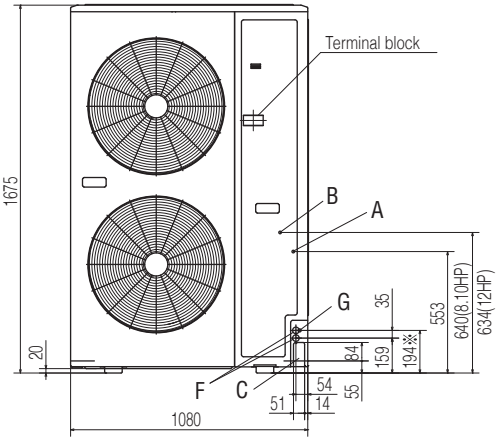

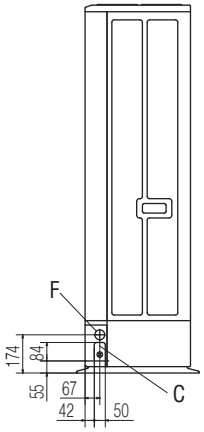

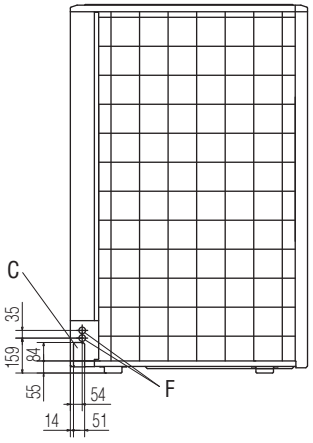

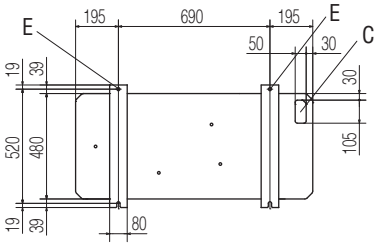

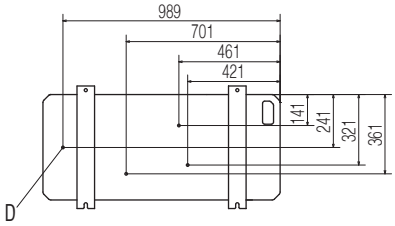

Mark	Item	224	280	335
A	Service valve connection of the attached connecting pipe (gas side)	ø19.05 (3/4") (Flare)	ø19.05 (3/4") (Flare)	ø19.05 (3/4") (Flare)
B	Service valve connection (liquid side)	ø9.52 (3/8") (Flare)	ø9.52 (3/8") (Flare)	ø12.7 (1/2") (Flare)
C	Pipe/cable draw-out hole	4places	4places	4places
D	Drain discharge hole	ø20 x 4places	ø20 x 4places	ø20 x 4places
E	Anchor bolt hole	M10 x 4places	M10 x 4places	M10 x 4places
F	Cable draw-out hole	ø30 x 2places (front) ø45 (side) ø30 x 2places (back)	ø30 x 2places (front) ø45 (side) ø30 x 2places (back)	ø30 x 2places (front) ø45 (side) ø30 x 2places (back)
G	Connecting position of the local pipe. (gas side)	ø19.05 (3/4")(Brazing)	ø22.22 (7/8")(Brazing)	ø25.4 (1")(Brazing)

Notes:
(1) It must not be surrounded by walls on the four sides.
(2) The unit must be fixed with anchor bolts. An anchor bolt must not protrude more than 15mm.
(3) Where the unit is subject to strong winds, lay it in such a direction that the blower outlet faces perpendicularly to the dominant wind direction.
(4) Leave a 1m or larger space above the unit.
(5) A wall in front of the blower outlet must not exceed the units height.
(6) The model name label is attached on the lower right corner of the front.
(7) Connect the Service valve with local pipe by using the pipe of the attachment.(Gas side only)
(8) Mark ※ shows the connecting position of the local pipe.(Gas side only)

KXZ Lite Outdoor units
Heat pump systems 8, 10HP (22.4kW · 28.0kW)

Model No.	Nominal Cooling Capacity
FDC224KXZPE1	22.4kW
FDC280KXZPE1	28.0kW

NEW



Blue Fin

Tropical Usage mode

- These heat pump 2-pipe systems offer high performance VRF for applications that require either cooling only or heating only, ideal for open plan areas.
- Connect up to 8 indoor units/up to 120% capacity.
- High efficiency with COP (in cooling) up to 4.0.
- These units employ DC inverter multiport compressors with concentrated winding motor.

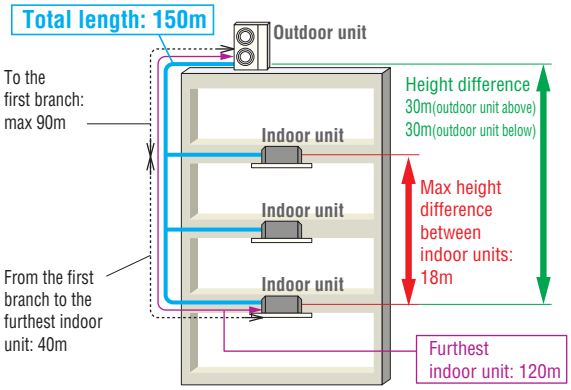

Range of operation

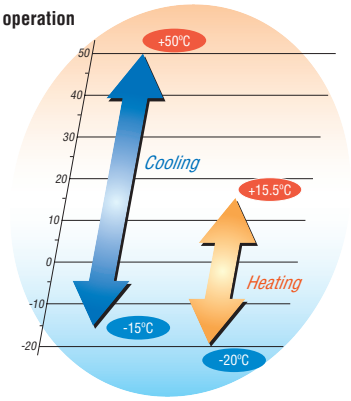

Specifications

Item			Model	FDC224KXZPE1	FDC280KXZPE1
Nominal horse power				8HP	10HP
Power source				3 Phase 380-415V, 50Hz	
Nominal capacity	Cooling		kW	22.4	28.0
	Heating			22.4	28.0
Electrical characteristics	Starting current		A	5	
	Power consumption	Cooling	kW	5.6	7.87
		Heating		4.8	6.47
	Running current	Cooling	A	9.2-8.5	12.9-11.8
		Heating		7.9-7.3	10.6-9.7
Exterior dimensions	HxWxD		mm	1505x970x370	
Net weight			kg	165	
Refrigerant charge	R410A		kg	8.9	
Sound pressure level	Cooling/Heating		dB(A)	59/60	60/63
Refrigerant piping size	Liquid line		mm(in)	ø9.52(3/8")	
	Gas line			ø19.05(3/4")	ø22.22(7/8")
Capacity connection			%	50~120	
Number of connectable indoor units				8	8

1. The data are measured under the following conditions(ISO-T1). Cooling: Indoor temp. of 27°CDB, 19°CWB, and outdoor temp. of 35°CDB. Heating: Indoor temp. of 20°CDB, and outdoor temp. of 7°CDB, 6°CWB. Piping length is 7.5m.
2. Sound pressure level indicates the value in an anechoic chamber. During operation these values are somewhat higher due to ambient conditions.

Refrigerant piping

Outdoor unit (HP)		8	10
Gas pipe	Furthest indoor unit =<90m	ø19.05	ø22.22
Liquid pipe		ø9.52	
Gas pipe	Furthest indoor unit =<90m	ø22.22	ø25.4/ø28.58
Liquid pipe		ø12.7	

Branch pipes

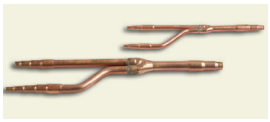

DIS-22-1G
DIS-180-1G

Header pipe



HEAD4-22-1G
HEAD6-180-1G

Dimensions

All measurements in mm.

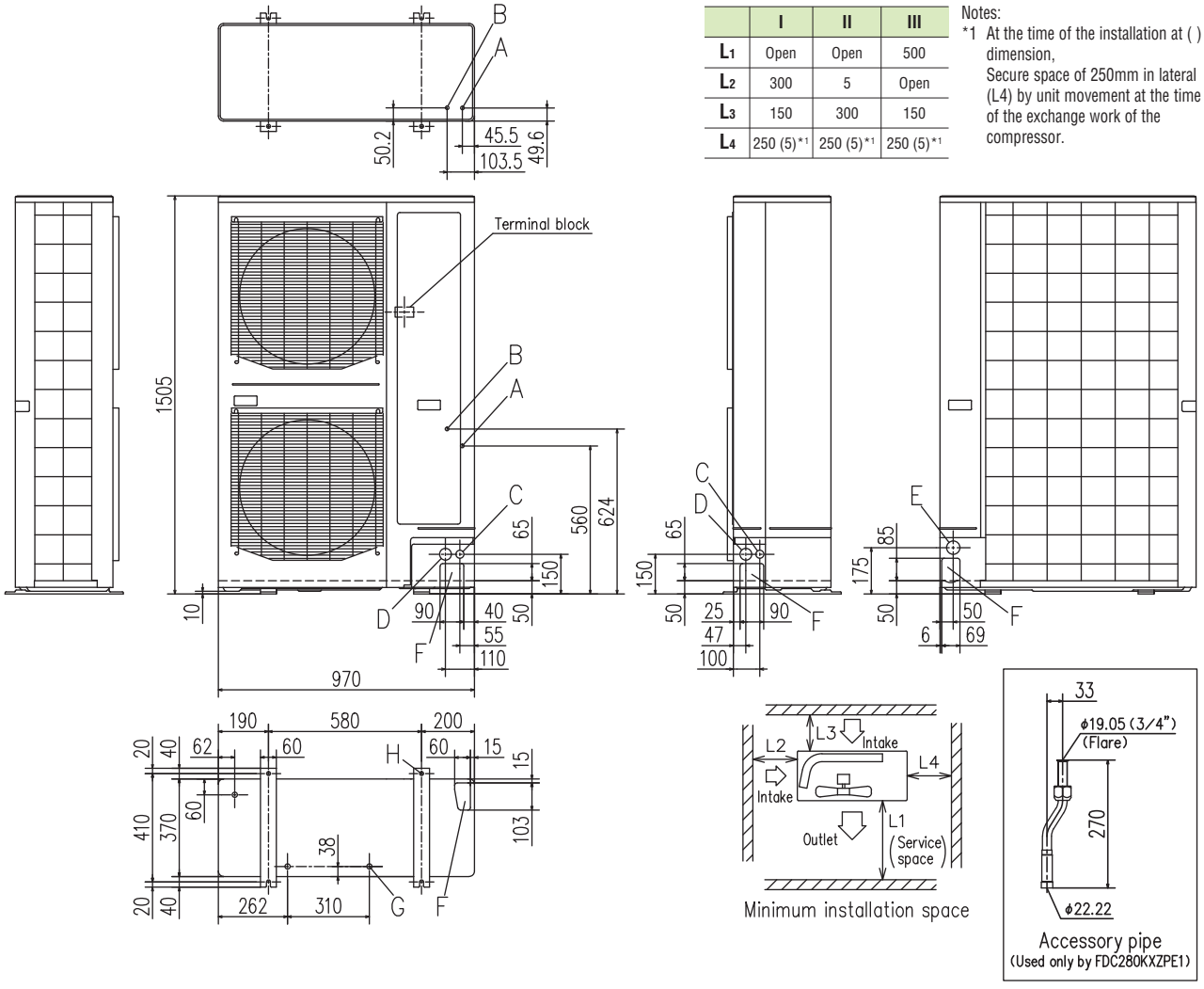

	I	II	III
L_1	Open	Open	500
L_2	300	5	Open
L_3	150	300	150
L_4	250 (5)*1	250 (5)*1	250 (5)*1

Notes:
*1 At the time of the installation at ( ) dimension,
Secure space of 250mm in lateral (L4) by unit movement at the time of the exchange work of the compressor.

Mark	Item	
A	Service valve connection of the attached connecting pipe (gas side)	ø19.05 (3/4") (Flare)
B	Service valve connection (liquid side)	ø9.52 (3/8") (Flare)
C	Cable draw-out hole (front · side)	ø30 x 2places
D	Cable draw-out hole (front · side)	ø45 x 2places
E	Cable draw-out hole (back)	ø50
F	Pipe/cable draw-out hole	4places
G	Drain discharge hole	ø20 x 3places
H	Anchor bolt hole	M10 x 4places

Notes:
(1) It must not be surrounded by walls on the four sides.
(2) The unit must be fixed with anchor bolts.
An anchor bolt must not protrude more than 15mm.
(3) Where the unit is subject to strong winds, lay it in such a direction that the blower outlet faces perpendicularly to the dominant wind direction.
(4) Leave 1m or more space above the unit.
(5) A wall in front of the blower outlet must not exceed the units height.
(6) The model name label is attached on the lower right corner of the front panel.
(7) Connect the Service valve with local pipe by using the pipe of the attachment. (Gas side only) (Accessory pipe is used only by FDC280KXZPE1)
(8) Regarding attaching the pipe of accessories, refer to an attached installation manual.

KXZ Outdoor units
Heat pump systems 10, 12HP (28.0kW, 33.5kW)

Model No.	Nominal Cooling Capacity
FDC280KXZE1	28.0kW
FDC335KXZE1	33.5kW

NEW



Blue Fin



Uniform footprint of models (10,12HP) allows continuous side-by-side installation

- The KXZ heat pump 2-pipe systems offer high performance VRF for applications that require either cooling only or heating only, ideal for open plan areas.
- Connect up to 29 indoor units/up to 130% capacity.
- High efficiency with COP (in cooling) up to 3.9.
- KXZ employs DC inverter compressors ONLY.
- Industry leading total piping length up to 1000m and a maximum pipe run of 160m.

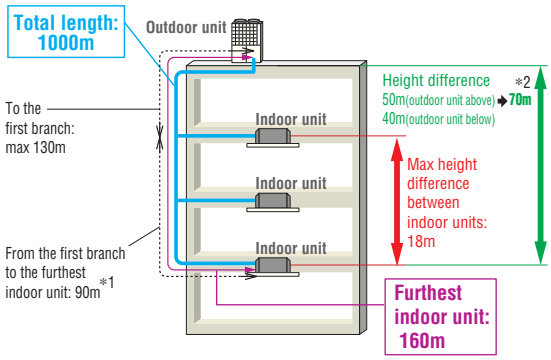

*1 The difference between the longest and the shortest indoor unit piping from the first branch must be within 40m. (MAX85m)
*2 In case of height difference up to 70m, please contact your dealer. Height difference up to 100m is possible with High Head series. Please refer to page 96.

Range of operation

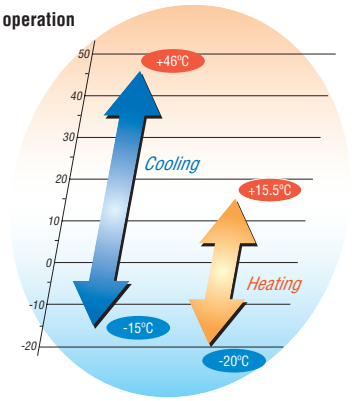

Specifications

Item			Model	FDC280KXZE1	FDC335KXZE1
Nominal horse power				10HP	12HP
Power source				3 Phase 380-415V, 50Hz	
Nominal capacity	Cooling		kW	28.0	33.5
	Heating			31.5	37.5
Electrical characteristics	Starting current		A	8	
	Power consumption	Cooling	kW	7.24	8.96
		Heating		7.28	9.04
	Running current	Cooling	A	11.9-10.9	14.6-13.4
		Heating		12.0-11.0	14.8-13.5
Exterior dimensions	HxWxD		mm	1690x1350x720	
Net weight			kg	272	
Refrigerant charge	R410A		kg	11.0	
Sound pressure level	Cooling/Heating		dB(A)	55/57	61/58
Refrigerant piping size	Liquid line		mm(in)	ø9.52(3/8")	ø12.7(1/2")
	Gas line			ø22.22(7/8")	ø25.4(1") [ø22.22(7/8")]
Capacity connection			%	50~130	
Number of connectable indoor units				24	29

1. The data are measured under the following conditions(ISO-T1). Cooling: Indoor temp. of 27°CDB, 19°CWB, and outdoor temp. of 35°CDB. Heating: Indoor temp. of 20°CDB, and outdoor temp. of 7°CDB, 6°CWB. Piping length is 7.5m.
2. Sound pressure level indicates the value in an anechoic chamber. During operation these values are somewhat higher due to ambient conditions.
3. [ ] : Pipe sizes applicable to European installations are shown in parentheses.

Dimensions

All measurements in mm.

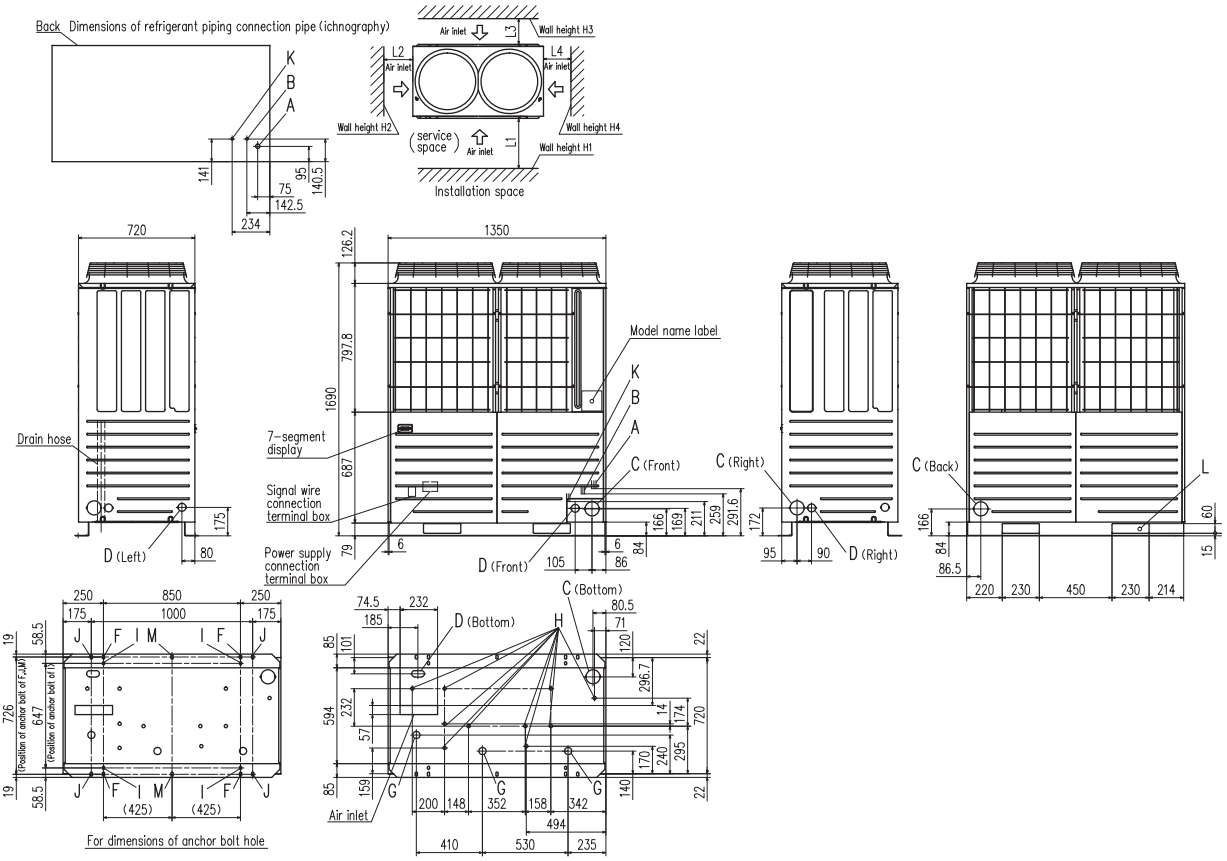

Mark	Content	280	335
A	Refrigerant gas piping connection pipe	ø22.22(Brazing)	ø25.4(Brazing)
B	Refrigerant liquid piping connection pipe	ø9.52(Flare)	ø12.7(Flare)
C	Refrigerant piping exit hole	ø88(or ø100)	
D	Power supply entry hole	ø50 (right · left · front), long hole 40 x 80 (bottom)	
F	Anchor bolt hole	M10 x 4 places	
G	Drain waste water hose hole	ø45 x 3 places	
H	Drain hole	ø20 x 10 places	
K	Refrigerant oil equalization piping connection pipe	ø9.52(Flare)	
L	Carrying in or hole for hanging	230 x 60	

Installation example		
Dimensions	1	2
L_1	500	Open
L_2	10(30)	10(30)
L_3	100	100
L_4	10(30)	Open
H_1	1500	Open
H_2	No limit	No limit
H_3	1000	No limit
H_4	No limit	Open

In case the ambient temperature becomes 43°C or higher during cooling operation

When more than one unit is installed

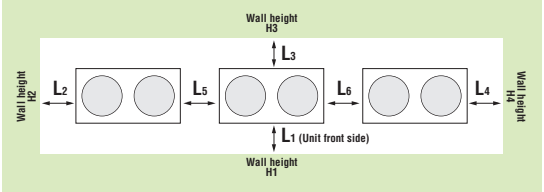

Installation example		
Dimensions	1	2
L_1	500	Open
L_2	10(30)	200
L_3	100	300
L_4	10(30)	Open
L_5	10(30)	400
L_6	10(30)	400
H_1	1500	Open
H_2	No limit	No limit
H_3	1000	No limit
H_4	No limit	Open

In case the ambient temperature becomes 43°C or higher during cooling operation

KXZ Outdoor units
Heat pump systems 14, 16, 17, 18, 20HP (40.0kW~56.0kW)

Model No.	Nominal Cooling Capacity
FDC400KXZE1	40.0kW
FDC450KXZE1	45.0kW
FDC475KXZE1	47.5kW
FDC500KXZE1	50.0kW
FDC560KXZE1	56.0kW

NEW

- The KXZ heat pump 2-pipe systems offer high performance VRF for applications that require either cooling only or heating only, ideal for open plan areas.
- Connect up to 48 indoor units/up to 130% capacity.
- High efficiency with COP (in cooling) up to 3.6.
- KXZ employs DC inverter compressors ONLY.
- Industry leading total piping length up to 1000m and a maximum pipe run of 160m.



Blue Fin



Uniform footprint of all models (from 14HP~20HP) allows continuous side-by-side installation

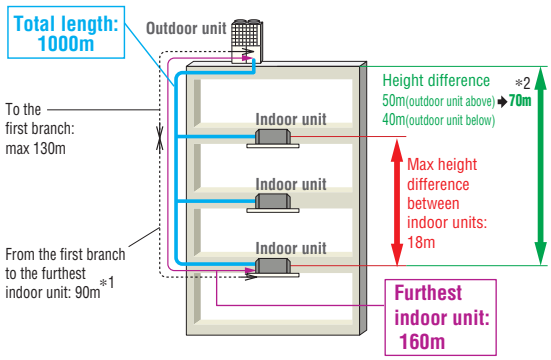

*1 The difference between the longest and the shortest indoor unit piping from the first branch must be within 40m. (MAX85m)
*2 In case of height difference up to 70m, please contact your dealer. Height difference up to 100m is possible with High Head series. Please refer to page 96.

Range of operation

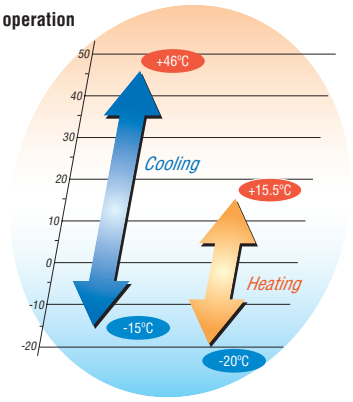

Specifications

Item			Model	FDC400KXZE1	FDC450KXZE1	FDC475KXZE1	FDC500KXZE1	FDC560KXZE1
Nominal horse power				14HP	16HP	17HP	18HP	20HP
Power source				3 Phase 380-415V, 50Hz				
Nominal capacity	Cooling		kW	40.0	45.0	47.5	50.0	56.0
	Heating			45.0	50.0	53.0	56.0	63.0
Electrical characteristics	Starting current		A	8				
	Power consumption	Cooling	kW	10.96	13.98	13.98	13.97	16.62
		Heating		10.69	12.50	13.00	13.49	15.95
	Running current	Cooling	A	17.5-16.2	22.4-20.5	22.6-20.7	22.6-20.7	26.9-24.6
		Heating		17.5-16..2	20.4-18.7	21.0-19.2	21.8-20.0	25.8-23.6
Exterior dimensions	HxWxD		mm	2048x1350x720				
Net weight			kg	317		370		
Refrigerant charge	R410A		kg	11.5				
Sound pressure level	Cooling/Heating		dB(A)	60/62	61/62	61/61	61/62	64/66
Refrigerant piping size	Liquid line		mm(in)	ø12.7(1/2")				
	Gas line			ø25.4(1") [ø28.58(1 1/8")]	ø28.58(1 1/8")			
Capacity connection			%	50~130				
Number of connectable indoor units				34	39	41	43	48

1. The data are measured under the following conditions(ISO-T1). Cooling: Indoor temp. of 27°CDB, 19°CWB, and outdoor temp. of 35°CDB. Heating: Indoor temp. of 20°CDB, and outdoor temp. of 7°CDB, 6°CWB. Piping length is 7.5m.
2. Sound pressure level indicates the value in an anechoic chamber. During operation these values are somewhat higher due to ambient conditions.
3. [ ] : Pipe sizes applicable to European installations are shown in parentheses.

Dimensions

All measurements in mm.

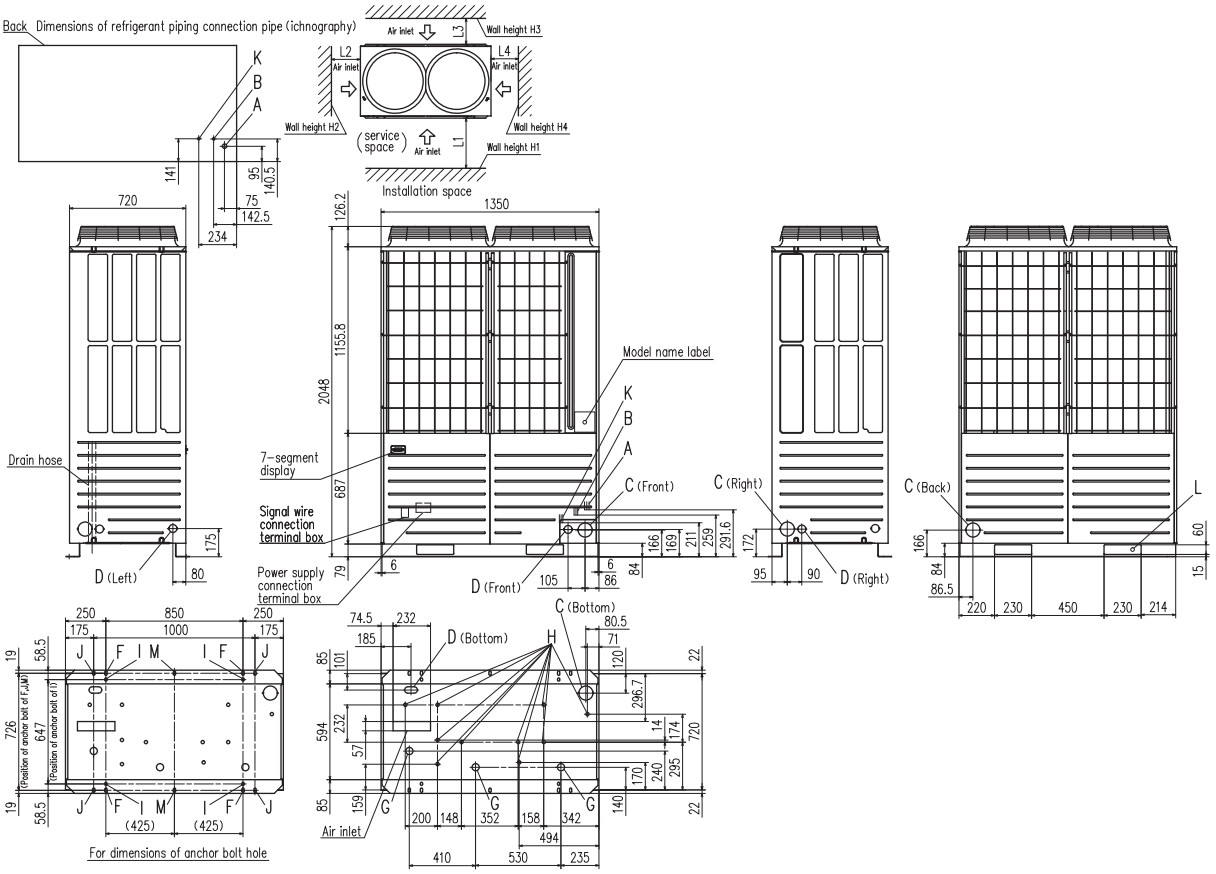

Mark	Content	400	450, 475, 500, 560
A	Refrigerant gas piping connection pipe	ø25.4(Brazing)	ø28.58(Brazing)
B	Refrigerant liquid piping connection pipe	ø12.7(Flare)	
C	Refrigerant piping exit hole	ø88(or ø100)	
D	Power supply entry hole	ø50 (right · left · front), long hole 40 x 80 (bottom)	
F	Anchor bolt hole	M10 x 4 places	
G	Drain waste water hose hole	ø45 x 3 places	
H	Drain hole	ø20 x 10 places	
K	Refrigerant oil equalization piping connection pipe	ø9.52(Flare)	
L	Carrying in or hole for hanging	230 x 60	

Installation example		
Dimensions	1	2
L_1	500	Open
L_2	10(30)	10(30)
L_3	100	100
L_4	10(30)	Open
H_1	1500	Open
H_2	No limit	No limit
H_3	1000	No limit
H_4	No limit	Open

In case the ambient temperature becomes 43ºC or higher during cooling operation

KXZ Outdoor units
Heat pump combination systems
22, 24HP (61.5kW, 67.0kW)

Model No.	Nominal Cooling Capacity
FDC615KXZE1 (FDC280+FDC335)	61.5kW
FDC670KXZE1 (FDC335+FDC335)	67.0kW

NEW





Uniform footprint of all models (from 22HP, 24HP) allows continuous side-by-side installation

- The KXZ heat pump 2-pipe systems offer high performance VRF for applications that require either cooling only or heating only, ideal for open plan areas.
- Connect up to 58 indoor units/up to 130% capacity.
- High efficiency with COP (in cooling) up to 3.8.
- KXZ employs DC inverter compressors ONLY.
- Industry leading total piping length up to 1000m and a maximum pipe run of 160m.

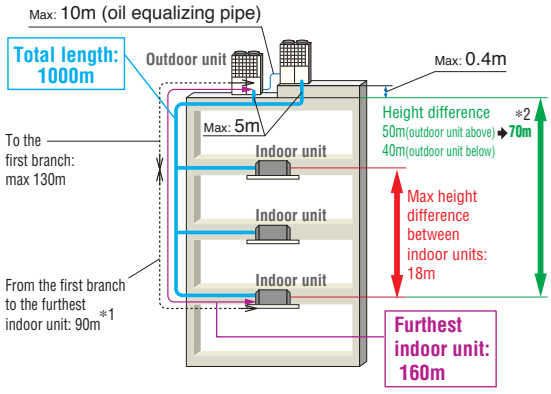

*1 The difference between the longest and the shortest indoor unit piping from the first branch must be within 40m. (MAX85m)
*2 In case of height difference up to 70m, please contact your dealer. Height difference up to 100m is possible with High Head series. Please refer to page 96.

Range of operation

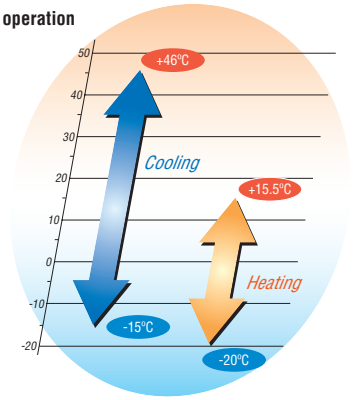

Specifications

Item			Model	FDC615KXZE1	FDC670KXZE1
Combination (FDC)				280KXZE1	335KXZE1
				335KXZE1	335KXZE1
Nominal horse power				22HP	24HP
Power source				3 Phase 380-415V, 50Hz	
Nominal capacity	Cooling		kW	61.5	67.0
	Heating			69.0	75.0
Electrical characteristics	Starting current		A	16	
	Power consumption	Cooling	kW	16.20	17.92
		Heating		16.32	18.08
	Running current	Cooling	A	26.5-24.3	29.2-26.8
		Heating		26.8-24.5	29.6-27.0
Exterior dimensions	HxWxD		mm	1690x2700x720	
Net weight			kg	544	
Refrigerant charge	R410A		kg	11.0x2	
Refrigerant piping size	Liquid line		mm(in)	ø12.7(1/2")	
	Gas line			ø28.58(1 1/8")	
Capacity connection			%	50~130	
Number of connectable indoor units				53	58

1. The data are measured under the following conditions(ISO-T1). Cooling: Indoor temp. of 27°CDB, 19°CWB, and outdoor temp. of 35°CDB. Heating: Indoor temp. of 20°CDB, and outdoor temp. of 7°CDB, 6°CWB. Piping length is 7.5m.
2. Sound pressure level indicates the value in an anechoic chamber. During operation these values are somewhat higher due to ambient conditions.

Dimensions

All measurements in mm.

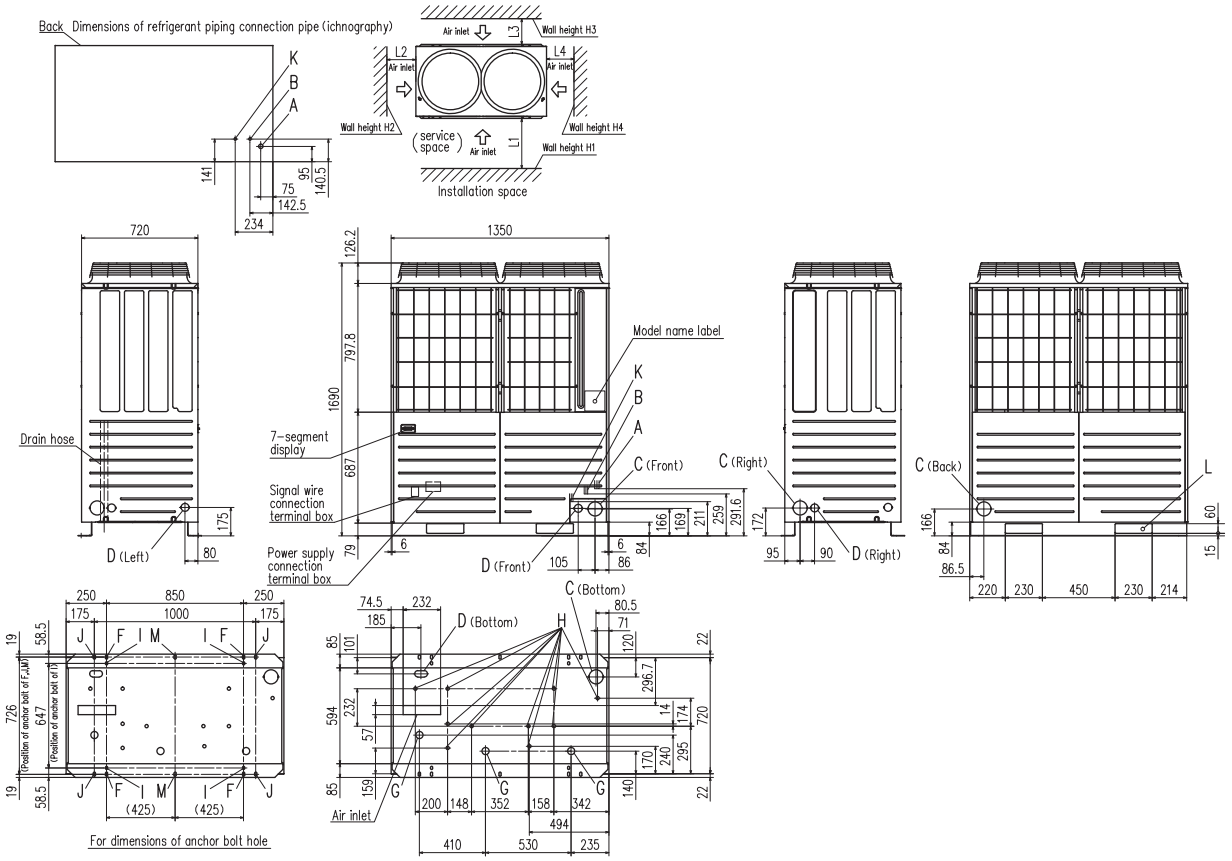

Mark	Content	280	335
A	Refrigerant gas piping connection pipe	ø22.22(Brazing)	ø25.4(Brazing)
B	Refrigerant liquid piping connection pipe	ø9.52(Flare)	ø12.7(Flare)
C	Refrigerant piping exit hole	ø88(or ø100)	
D	Power supply entry hole	ø50 (right · left · front), long hole 40 x 80 (bottom)	
F	Anchor bolt hole	M10 x 4 places	
G	Drain waste water hose hole	ø45 x 3 places	
H	Drain hole	ø20 x 10 places	
K	Refrigerant oil equalization piping connection pipe	ø9.52(Flare)	
L	Carrying in or hole for hanging	230 x 60	

Installation example		
Dimensions	1	2
L_1	500	Open
L_2	10(30)	10(30)
L_3	100	100
L_4	10(30)	Open
H_1	1500	Open
H_2	No limit	No limit
H_3	1000	No limit
H_4	No limit	Open

In case the ambient temperature becomes 43°C or higher during cooling operation

KXZ Outdoor units
Heat pump combination systems
26, 28, 30, 32, 34, 36, 38, 40HP (73.5kW~112.0kW)

Model No.		Nominal Cooling Capacity
FDC735KXZE1	(FDC335+FDC400)	73.5kW
FDC800KXZE1	(FDC400+FDC400)	80.0kW
FDC850KXZE1	(FDC400+FDC450)	85.0kW
FDC900KXZE1	(FDC450+FDC450)	90.0kW
FDC950KXZE1	(FDC475+FDC475)	95.0kW
FDC1000KXZE1	(FDC500+FDC500)	100.0kW
FDC1060KXZE1	(FDC500+FDC560)	106.0kW
FDC1120KXZE1	(FDC560+FDC560)	112.0kW

NEW

Blue Fin



- The KXZ heat pump 2-pipe systems offer high performance VRF for applications that require either cooling only or heating only, ideal for open plan areas.
- Connect up to 80 indoor units/up to 130% capacity.
- High efficiency with COP (in cooling) up to 3.7.
- KXZ employs DC inverter compressors ONLY.
- Industry leading total piping length up to 1000m and a maximum pipe run of 160m.

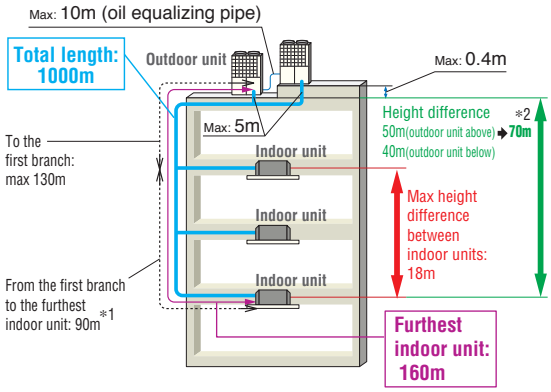

*1 The difference between the longest and the shortest indoor unit piping from the first branch must be within 40m. (MAX85m)
*2 In case of height difference up to 70m, please contact your dealer. Height difference up to 100m is possible with High Head series. Please refer to page 96.

Range of operation

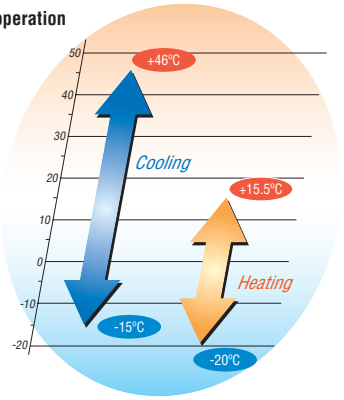

Specifications

*Exterior dimension : Please refor to page 27.

Item			Model	FDC735KXZE1	FDC800KXZE1	FDC850KXZE1	FDC900KXZE1	FDC950KXZE1	FDC1000KXZE1	FDC1060KXZE1	FDC1120KXZE1
Combination (FDC)				335KXZE1*	400KXZE1	400KXZE1	450KXZE1	475KXZE1	500KXZE1	500KXZE1	560KXZE1
				400KXZE1	400KXZE1	450KXZE1	450KXZE1	475KXZE1	500KXZE1	560KXZE1	560KXZE1
Nominal horse power				26HP	28HP	30HP	32HP	34HP	36HP	38HP	40HP
Power source				3 Phase 380-415V, 50Hz							
Nominal capacity	Cooling		kW	73.5	80.0	85.0	90.0	95.0	100.0	106.0	112.0
	Heating			82.5	90.0	95.0	100.0	106.0	112.0	119.0	126.0
Electrical characteristics	Starting current		A	16							
	Power consumption	Cooling	kW	19.92	21.92	24.94	27.96	27.96	27.94	30.59	33.24
		Heating		19.73	21.38	23.19	25.00	26.00	26.98	29.44	31.90
	Running current	Cooling	A	32.1-29.6	35.0-32.4	39.9-36.7	44.8-41.0	45.2-41.4	45.2-41.4	49.5-45.3	53.8-49.2
		Heating		32.3-29.7	35.0-32.4	37.9-34.9	40.8-37.4	42.0-38.4	43.6-40.0	47.6-43.6	51.6-47.2
Exterior dimensions	HxWxD		mm	2048x2700x720							
Net weight			kg	589	634			740			
Refrigerant charge	R410A		kg	11.0+11.5	11.5x2						
Refrigerant piping size	Liquid line		mm(in)	ø15.88(5/8")						ø19.05(3/4")	
	Gas line			ø31.75(1 1/4") [ø34.92(1 3/8")]						ø38.1(1 1/2") [ø34.92(1 3/8")]	
Capacity connection			%	50~130							
Number of connectable indoor units				63	69	73	78	80			

1. The data are measured under the following conditions(ISO-T1). Cooling: Indoor temp. of 27°CDB, 19°CWB, and outdoor temp. of 35°CDB. Heating: Indoor temp. of 20°CDB, and outdoor temp. of 7°CDB, 6°CWB. Piping length is 7.5m.
2. Sound pressure level indicates the value in an anechoic chamber. During operation these values are somewhat higher due to ambient conditions.
3. [ ] : Pipe sizes applicable to European installations are shown in parentheses.

Dimensions

All measurements in mm.

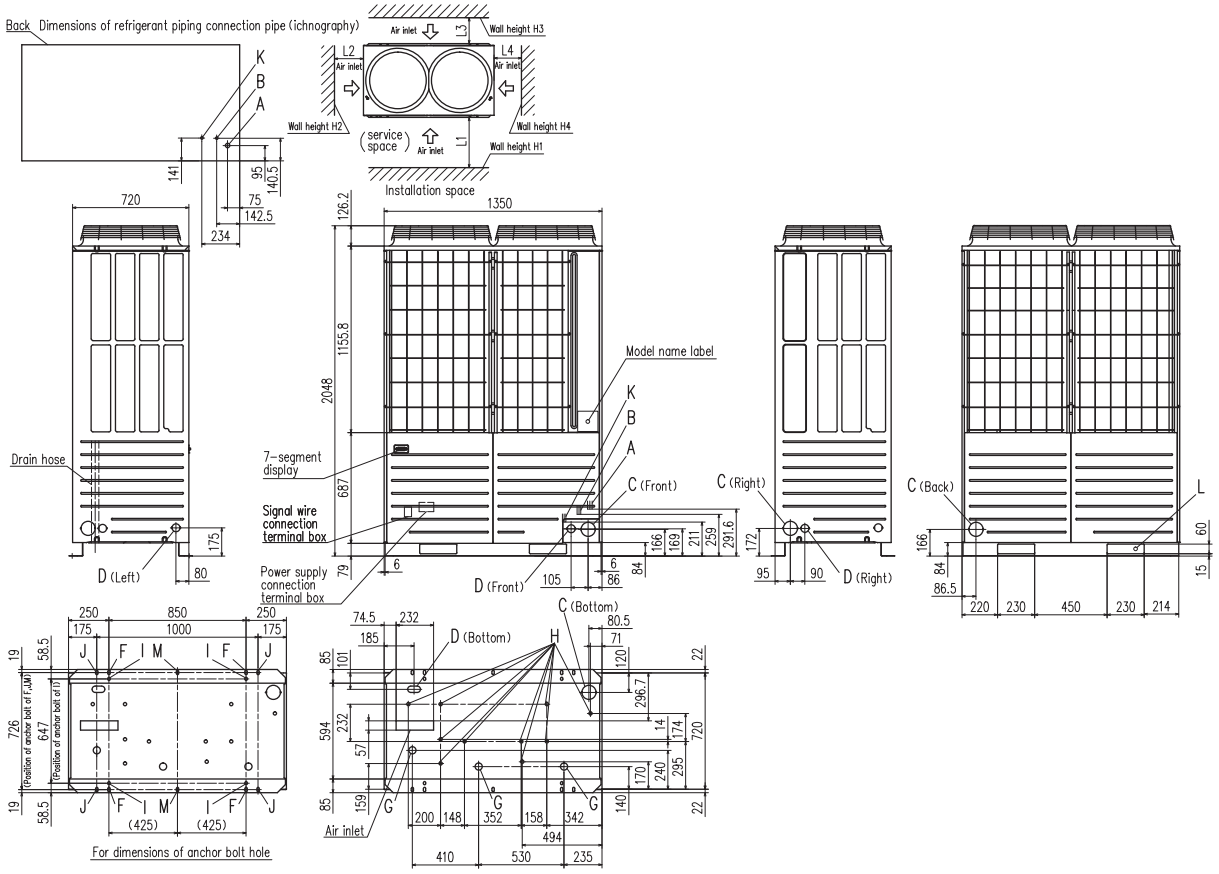

Mark	Content	400	450, 475, 500, 560
A	Refrigerant gas piping connection pipe	ø25.4(Brazing)	ø28.58(Brazing)
B	Refrigerant liquid piping connection pipe	ø12.7(Flare)	
C	Refrigerant piping exit hole	ø88(or ø100)	
D	Power supply entry hole	ø50 (right · left · front), long hole 40 x 80 (bottom)	
F	Anchor bolt hole	M10 x 4 places	
G	Drain waste water hose hole	ø45 x 3 places	
H	Drain hole	ø20 x 10 places	
K	Refrigerant oil equalization piping connection pipe	ø9.52(Flare)	
L	Carrying in or hole for hanging	230 x 60	

Installation example		
Dimensions	1	2
L_1	500	Open
L_2	10(30)	10(30)
L_3	100	100
L_4	10(30)	Open
H_1	1500	Open
H_2	No limit	No limit
H_3	1000	No limit
H_4	No limit	Open

In case the ambient temperature becomes 43°C or higher during cooling operation

KXZ Outdoor units
Heat pump combination systems
42, 44, 46, 48, 50, 52, 54, 56, 58, 60HP (120.0kW~168.0kW)

Model No.	Nominal Cooling Capacity
FDC1200KXZE1 (FDC400+FDC400+FDC400)	120.0kW
FDC1250KXZE1 (FDC400+FDC400+FDC450)	125.0kW
FDC1300KXZE1 (FDC400+FDC450+FDC450)	130.0kW
FDC1350KXZE1 (FDC450+FDC450+FDC450)	135.0kW
FDC1425KXZE1 (FDC475+FDC475+FDC475)	142.5kW
FDC1450KXZE1 (FDC475+FDC475+FDC500)	145.0kW
FDC1500KXZE1 (FDC500+FDC500+FDC500)	150.0kW
FDC1560KXZE1 (FDC500+FDC500+FDC560)	156.0kW
FDC1620KXZE1 (FDC500+FDC560+FDC560)	162.0kW
FDC1680KXZE1 (FDC560+FDC560+FDC560)	168.0kW

NEW

Blue Fin



- The KXZ heat pump 2-pipe systems offer high performance VRF for applications that require either cooling only or heating only, ideal for open plan areas.
- Connect up to 80 indoor units/up to 130% capacity.
- High efficiency with COP (in cooling) up to 3.6.
- KXZ employs DC inverter compressors ONLY.
- Industry leading total piping length up to 1000m and a maximum pipe run of 160m.

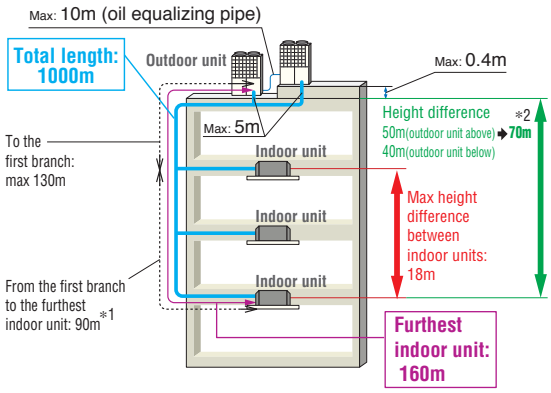

*1 The difference between the longest and the shortest indoor unit piping from the first branch must be within 40m. (MAX85m)
*2 In case of height difference up to 70m, please contact your dealer. Height difference up to 100m is possible with High Head series. Please refer to page 96.

Range of operation

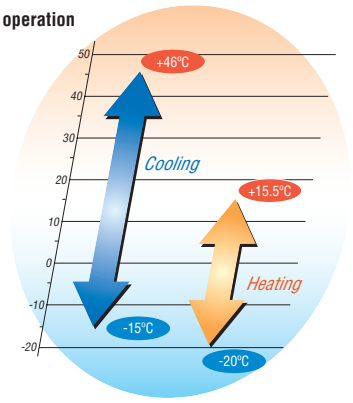

Specifications

Item			Model	FDC1200KXZE1	FDC1250KXZE1	FDC1300KXZE1	FDC1350KXZE1	FDC1425KXZE1	FDC1450KXZE1	FDC1500KXZE1	FDC1560KXZE1	FDC1620KXZE1	FDC1680KXZE1
Combination (FDC)				400KXZE1	400KXZE1	400KXZE1	450KXZE1	475KXZE1	475KXZE1	500KXZE1	500KXZE1	500KXZE1	560KXZE1
				400KXZE1	400KXZE1	450KXZE1	450KXZE1	475KXZE1	475KXZE1	500KXZE1	500KXZE1	560KXZE1	560KXZE1
				400KXZE1	450KXZE1	450KXZE1	450KXZE1	475KXZE1	500KXZE1	500KXZE1	560KXZE1	560KXZE1	560KXZE1
Nominal horse power				42HP	44HP	46HP	48HP	50HP	52HP	54HP	56HP	58HP	60HP
Power source				3 Phase 380-415V, 50Hz									
Nominal capacity	Cooling		kW	120.0	125.0	130.0	135.0	142.5	145.0	150.0	156.0	162.0	168.0
	Heating			135.0	140.0	145.0	150.0	159.0	162.0	168.0	175.0	182.0	189.0
Electrical characteristics	Starting current		A	24									
	Power consumption	Cooling	kW	32.88	35.90	38.92	41.90	41.94	41.93	41.91	44.56	47.21	49.86
		Heating		32.07	33.88	35.69	37.50	39.00	39.49	40.47	42.93	45.39	47.85
	Running current	Cooling	A	52.5-48.6	57.4-52.9	62.3-57.2	67.2-61.5	67.8-62.1	67.8-62.1	67.8-62.1	72.1-66.0	76.4-69.9	80.7-73.8
		Heating		52.5-48.6	55.4-51.1	58.3-53.6	61.2-56.1	63.0-57.6	63.8-58.4	65.4-60.0	69.4-63.6	73.4-67.2	77.4-70.8
Exterior dimensions	HxWxD		mm	2048x4050x720									
Net weight			kg	951				1110					
Refrigerant charge	R410A		kg	11.5x3									
Refrigerant piping size	Liquid line		mm(in)	ø19.05(3/4")									
	Gas line			ø38.1(1 1/2") [ø34.92(1 3/8")]									
Capacity connection			%	50-130									
Number of connectable indoor units				80									

1. The data are measured under the following conditions(ISO-T1). Cooling: Indoor temp. of 27°CDB, 19°CWB, and outdoor temp. of 35°CDB. Heating: Indoor temp. of 20°CDB, and outdoor temp. of 7°CDB, 6°CWB. Piping length is 7.5m.
2. Sound pressure level indicates the value in an anechoic chamber. During operation these values are somewhat higher due to ambient conditions.
3. [ ] : Pipe sizes applicable to European installations are shown in parentheses.

Dimensions

All measurements in mm.

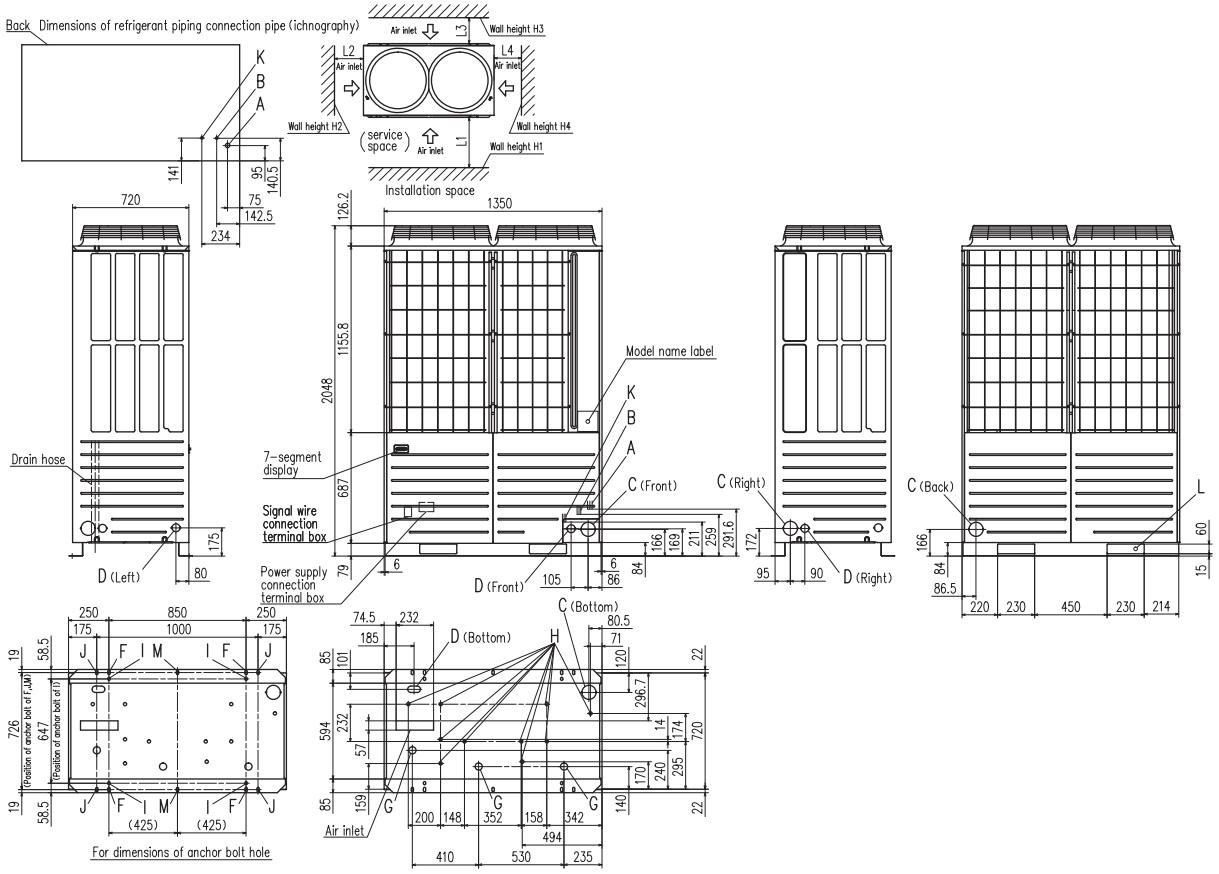

Mark	Content	400	450, 475, 500, 560
A	Refrigerant gas piping connection pipe	ø25.4(Brazing)	ø28.58(Brazing)
B	Refrigerant liquid piping connection pipe	ø12.7(Flare)	
C	Refrigerant piping exit hole	ø88(or ø100)	
D	Power supply entry hole	ø50 (right · left · front), long hole 40 x 80 (bottom)	
F	Anchor bolt hole	M10 x 4 places	
G	Drain waste water hose hole	ø45 x 3 places	
H	Drain hole	ø20 x 10 places	
K	Refrigerant oil equalization piping connection pipe	ø9.52(Flare)	
L	Carrying in or hole for hanging	230 x 60	

Installation example		
Dimensions	1	2
L_1	500	Open
L_2	10(30)	10(30)
L_3	100	100
L_4	10(30)	Open
H_1	1500	Open
H_2	No limit	No limit
H_3	1000	No limit
H_4	No limit	Open

In case the ambient temperature becomes 43°C or higher during cooling operation

KXZ Outdoor units
Hi-COP series 8~36HP (22.4kW~100.0kW)

Model No.	Nominal Cooling Capacity
FDC224KXZXE1	22.4kW
FDC280KXZXE1	28.0kW
FDC335KXZXE1	33.5kW

Model No.		Nominal Cooling Capacity
FDC450KXZXE1	(FDC224+FDC224)	45.0kW
FDC500KXZXE1	(FDC224+FDC280)	50.0kW
FDC560KXZXE1	(FDC280+FDC280)	56.0kW
FDC615KXZXE1	(FDC280+FDC335)	61.5kW
FDC670KXZXE1	(FDC335+FDC335)	67.0kW
FDC735KXZXE1	(FDC224+FDC224+FDC280)	73.5kW
FDC800KXZXE1	(FDC224+FDC280+FDC280)	80.0kW
FDC850KXZXE1	(FDC280+FDC280+FDC280)	85.0kW
FDC900KXZXE1	(FDC280+FDC280+FDC335)	90.0kW
FDC950KXZXE1	(FDC280+FDC335+FDC335)	95.0kW
FDC1000KXZXE1	(FDC335+FDC335+FDC335)	100.0kW

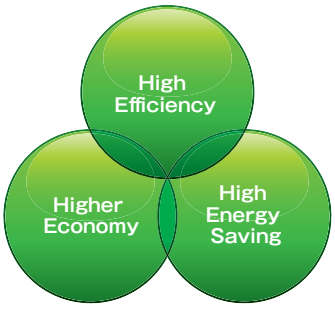

NEW

Blue Fin



FDC224KXZXE1

Blue Fin



FDC280KXZXE1
FDC335KXZXE1

Indoor unit connection capacity

This series can connect indoor unit capacity up to 160~200%.

kW	capacity connection
22.4~45.0	200%
50.0~100.0	160%

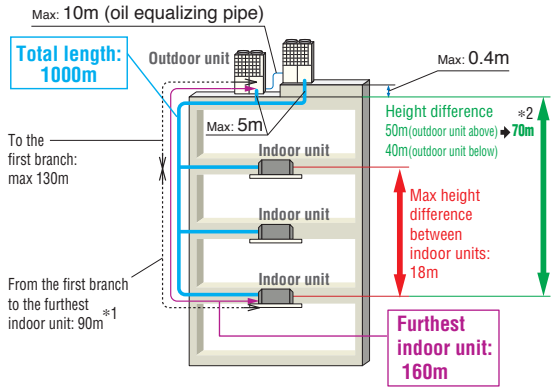

*1 The difference between the longest and the shortest indoor unit piping from the first branch must be within 40m. (MAX85m)
*2 In case of height difference up to 70m, please contact your dealer. Height difference up to 100m is possible with High Head series. Please refer to page 96.

Range of operation

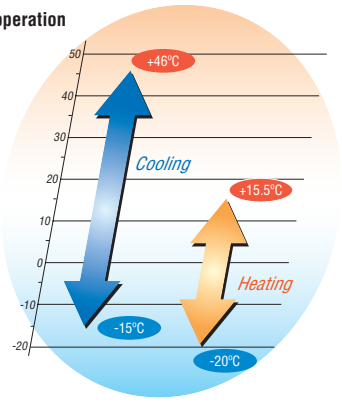

Specifications

Item			Model	FDC224KXZXE1	FDC280KXZXE1	FDC335KXZXE1
Nominal horse power				8HP	10HP	12HP
Power source				3Phase 380~415V, 50Hz		
Nominal capacity	Cooling		kW	22.4	28.0	33.5
	Heating			25.0	31.5	37.5
Electrical characteristics	Starting current		A	8		
	Power consumption	Cooling	kW	4.98	6.95	8.68
		Heating		5.56	6.83	8.39
	Running current	Cooling	A	8.7-8.0	11.7-10.7	14.7-13.4
		Heating		9.6-8.8	11.7-10.7	14.3-13.1
Exterior dimensions	H x W x D		mm	1690x1350x720	2048x1350x720	
Net weight			kg	280	325	
Refrigerant charge	R410A		kg	11.0	11.5	
Refrigerant piping size	Liquid line		mm(in)	ø9.52(3/8")		ø12.7(1/2")
	Gas line			ø19.05(3/4")	ø22.22(7/8")	ø25.4(1")[ø22.22(7/8")]
Capacity connection			%	200		
Number of connectable indoor units				29	37	44

Item			Model	FDC450KXZXE1	FDC500KXZXE1	FDC560KXZXE1	FDC615KXZXE1	FDC670KXZXE1
Combination (FDC)				224KXZXE1	224KXZXE1	280KXZXE1	280KXZXE1	335KXZXE1
				224KXZXE1	280KXZXE1	280KXZXE1	335KXZXE1	335KXZXE1
Nominal horse power				16HP	18HP	20HP	22HP	24HP
Power source				3Phase 380~415V, 50Hz				
Nominal capacity	Cooling		kW	45.0	50.0	56.0	61.5	67.0
	Heating			50.0	56.0	63.0	69.0	75.0
Electrical characteristics	Starting current		A	16				
	Power consumption	Cooling	kW	10.0	11.8	13.9	15.6	17.4
		Heating		11.1	12.3	13.7	15.2	16.8
	Running current	Cooling	A	17.5-16.0	20.0-18.5	23.5-21.5	26.4-24.1	29.3-26.8
		Heating		19.2-17.6	21.2-19.4	23.3-24.4	26.0-23.8	28.6-26.2
Exterior dimensions	H x W x D		mm	1690x2700x720	2048x2700x720			
Net weight			kg	560	605	650	650	650
Refrigerant charge	R410A		kg	11.0x2	11.0+11.5	11.5x2		
Refrigerant piping size	Liquid line		mm(in)	ø12.7(1/2")				
	Gas line			ø28.58(1 1/8")				
	Oil equalization			ø9.52(3/8")				
Capacity connection			%	200	160			
Number of connectable indoor units				60	53	59	65	71

Item			Model	FDC735KXZXE1	FDC800KXZXE1	FDC850KXZXE1	FDC900KXZXE1	FDC950KXZXE1	FDC1000KXZXE1
Combination (FDC)				224KXZXE1	224KXZXE1	280KXZXE1	280KXZXE1	280KXZXE1	335KXZXE1
				224KXZXE1	280KXZXE1	280KXZXE1	280KXZXE1	335KXZXE1	335KXZXE1
				280KXZXE1	280KXZXE1	280KXZXE1	335KXZXE1	335KXZXE1	335KXZXE1
Nominal horse power				26HP	28HP	30HP	32HP	34HP	36HP
Power source				3Phase 380~415V, 50Hz					
Nominal capacity	Cooling		kW	73.5	80.0	85.0	90.0	95.0	100.0
	Heating			82.5	90.0	95.0	100.0	106.0	112.0
Electrical characteristics	Starting current		A	24					
	Power consumption	Cooling	kW	17.1	19.3	21.1	22.7	24.3	25.9
		Heating		18.2	19.7	20.6	21.9	23.5	25.1
	Running current	Cooling	A	29.4-27.0	32.9-30.1	35.6-32.6	38.4-35.1	41.0-37.6	43.7-40.0
		Heating		31.4-28.7	33.5-30.7	35.2-32.2	37.4-34.3	40.1-36.7	42.8-39.2
Exterior dimensions	H x W x D		mm	2048x4050x720					
Net weight			kg	885	930	975	975		
Refrigerant charge	R410A		kg	11.0x2+11.5	11.0+11.5x2	11.5x3			
Refrigerant piping size	Liquid line		mm(in)	ø15.88(5/8")					
	Gas line			ø31.75(1 1/4")[ø34.92(1 3/8")]					Ø38.1(1/2")[ø34.92(1 3/8")]
	Oil equalization			ø9.52(3/8")					
Capacity connection			%	160					
Number of connectable indoor units				78	80	80	80	80	80

1. The data are measured under the following conditions(ISO-T1). Cooling: Indoor temp. of 27°CDB, 19°CWB, and outdoor temp. of 35°CDB. Heating: Indoor temp. of 20°CDB, and outdoor temp. of 7°CDB, 6°CWB. Piping length is 7.5m.
2. Sound pressure level indicates the value in an anechoic chamber. During operation these values are somewhat higher due to ambient conditions.
3. [ ] : Pipe sizes applicable to European installations are shown in parentheses.

Dimensions

All measurements in mm.

FDC224KXZXE1

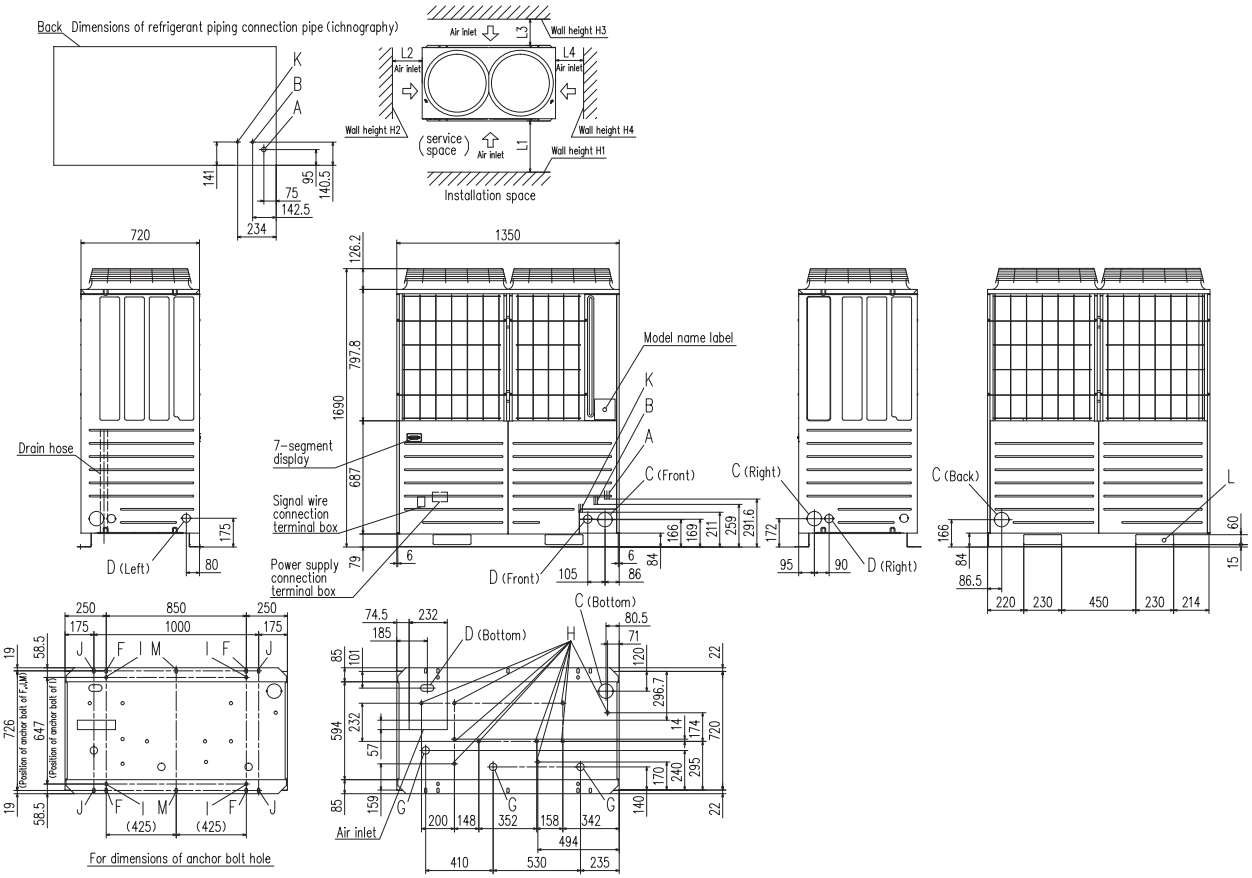

Mark	Content	224
A	Refrigerant gas piping connection pipe	ø19.05 (Brazing)
B	Refrigerant liquid piping connection pipe	ø9.52 (Flare)
C	Refrigerant piping exit hole	ø88 (or ø100)
D	Power supply entry hole	ø50 (Right · Left · Front), Long hole 40 x 80 (Bottom)
F	Anchor bolt hole	M10 x 4 places
G	Drain waste water hose hole	ø45 x 3 places
H	Drain hole	ø20 x 10 places
K	Refrigerant oil equalization piping connection pipe	ø9.52 (Flare)
L	Carrying in or hole for hanging	230 x 60

Installation example		
Dimensions	1	2
L_1	500	Open
L_2	10(30)	10(30)
L_3	100	100
L_4	10(30)	Open
H_1	1500	Open
H_2	No limit	No limit
H_3	1000	No limit
H_4	No limit	Open

In case the ambient temperature becomes 43ºC or higher during cooling operation

FDC280KXZXE1, 335KXZXE1

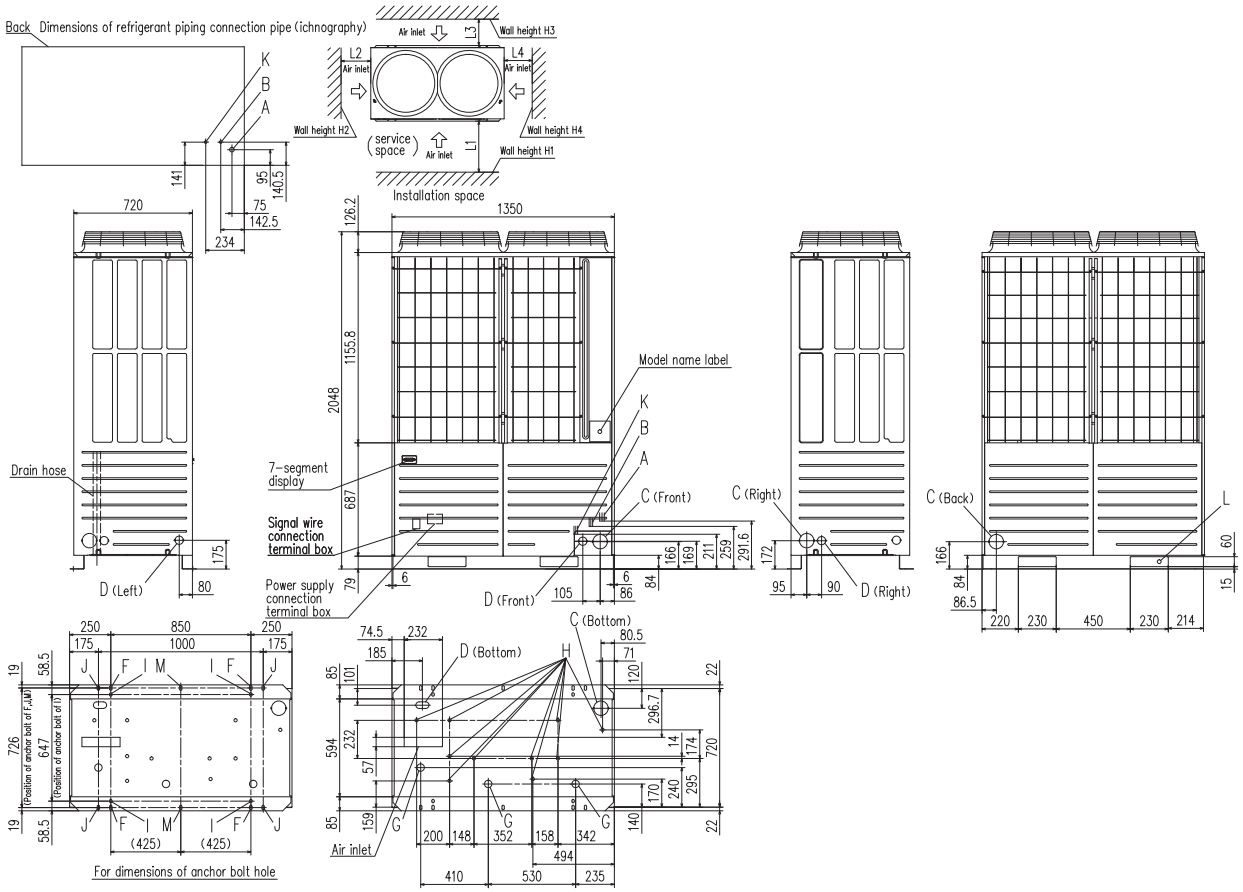

Mark	Content	280	335
A	Refrigerant gas piping connection pipe	ø22.22 (Brazing)	ø25.4 (Brazing)
B	Refrigerant liquid piping connection pipe	ø9.52 (Flare)	ø12.7 (Flare)
C	Refrigerant piping exit hole	ø88 (or ø100)	
D	Power supply entry hole	ø50 (Right · Left · Front), Long hole 40 x 80 (Bottom)	
F	Anchor bolt hole	M10 x 4 places	
G	Drain waste water hose hole	ø45 x 3 places	
H	Drain hole	ø20 x 10 places	
K	Refrigerant oil equalization piping connection pipe	ø9.52(Flare)	
L	Carrying in or hole for hanging	230 x 60	

Installation example		
Dimensions	1	2
L_1	500	Open
L_2	10(30)	10(30)
L_3	100	100
L_4	10(30)	Open
H_1	1500	Open
H_2	No limit	No limit
H_3	1000	No limit
H_4	No limit	Open

In case the ambient temperature becomes 43ºC or higher during cooling operation

KXZ refrigerant piping

Installation of Interconnecting Pipework
Mitsubishi KXZ equipment is manufactured to the highest standards of quality and reliability. It is imperative the method of installation and the materials used are also to high standards, to ensure trouble free operation and long term reliability.
The interconnecting pipework must be installed by a competent and trained engineer.
Refrigeration quality copper tube must be used, soft copper coils or half-hard straight lengths. The refrigeration quality tube must be soft drawn seamless high grade copper pipe. The copper tube must be selected taking into account the higher operating pressures of R410A refrigerant, and that high pressures will occur throughout the system because of the reverse cycle operation. All pipework material used should be EN12735 European standard.

The supplied branch pipe kits, must be used to make connections to indoor units, and the supplied manifold kits must be used to make connections between outdoor units (where applicable); it is not permitted to use standard fittings such as elbows, tees etc. The branch pipes shall be installed in accordance with the manufacturer's instructions, allowing unrestricted flow of refrigerant, and in accordance with European standard E378.
All brazed joints shall be made with dry nitrogen purge to ensure the prevention of oxidisation to the internal surface of the copper pipes.
The ingress of moisture, dirt and any other contaminants to the interior of the copper pipes, and air conditioning units, must be prevented during the installation procedure.
After the installation of pipework, prior to the connection of the outdoor units, and sealing of insulation joints, the pipework must be pressure tested for leakage, using dry nitrogen.

Additional Refrigerant
Additional R410A refrigerant only shall be used, and must be charged by weight only, using electronic scales. The amount of additional refrigerant must be accurately calculated from the manufacturer's data, based on the length and diameter of each section of the liquid refrigerant pipework of the system.

The products contains fluorinated greenhouse gases covered by Kyoto protocol.

Single outdoor unit piping examples:



Piping arrangement using header

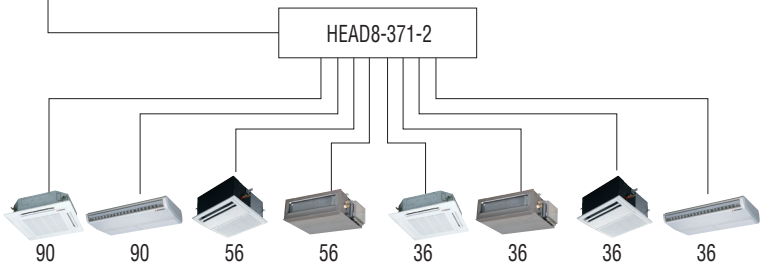





Piping arrangement using branch pipe kits

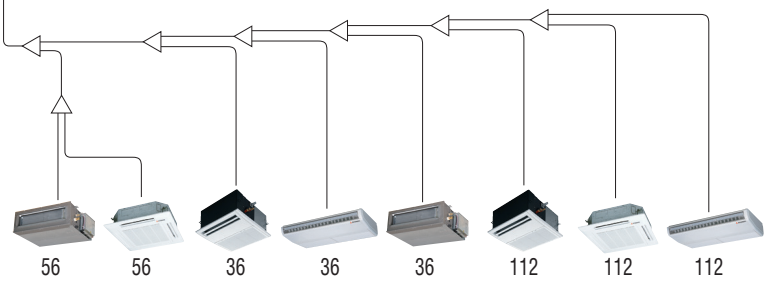

KXZ refrigerant piping

Main (Outdoor unit side branching pipe – Indoor unit side first branching pipe)
If the longest distance (measured between the outdoor unit and the farthest indoor unit) is 90m or longer (actual length), please change the main pipe size according to the table below.

Outdoor unit	Main pipe size (normal)		Pipe size for an actual length of 90m or longer	
	Gas pipe	Liquid pipe	Gas pipe	Liquid pipe
280	ø22.22 × t 1.0	ø9.52 × t 0.8	ø25.4 (ø22.22) × t 1.0	ø12.7 × t 0.8
335	ø25.4 (ø22.22) × t 1.0	ø12.7 × t 0.8	ø28.58 × t 1.0	
400	ø25.4 (ø28.58) × t 1.0		ø31.8 × t 1.1 (ø28.58 × t 1.0)	ø15.88 × t 1.0
450	ø28.58 × t 1.0			
475				
500				
560				
615				
670				
735	ø31.8 × t 1.1 (ø34.92 × t 1.2)	ø15.88 × t 1.0	ø38.1 × t 1.35 (ø34.92 × t 1.2)	ø19.05 × t 1.0
800				
850				
900				
950				
1000	ø38.1 × t 1.35 (ø34.92 × t 1.2)	ø19.05 × t 1.0		ø22.22 × t 1.0
1060				
1120				
1200				
1250				
1300				
1350				
1425				
1450				
1500				
1560				
1620				
1680				

mm	inch
ø9.52	3/8"
ø12.7	1/2"
ø15.88	5/8"
ø19.05	3/4"
ø22.22	7/8"
ø25.4	1"

mm	inch
ø28.58	1 1/8"
ø31.8	1 1/4"
ø34.92	1 3/8"
ø38.1	1 1/2"
ø44.5	1 3/4"
ø50.8	2"

Please use C1220T-1/2H for ø19.05 or larger pipes.
Pipe sizes applicable to European installations are shown in parentheses.

Branch pipes

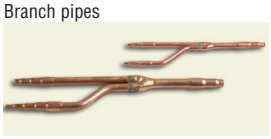

DIS-22-1G/DIS-180-1G

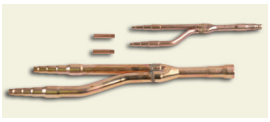

DIS-371-1G/DIS-540-3

Header pipe

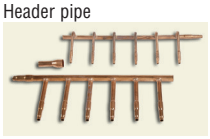

HEAD6-180-1G

Combination outdoor unit manifold



DOS-2A-3
DOS-3A-3

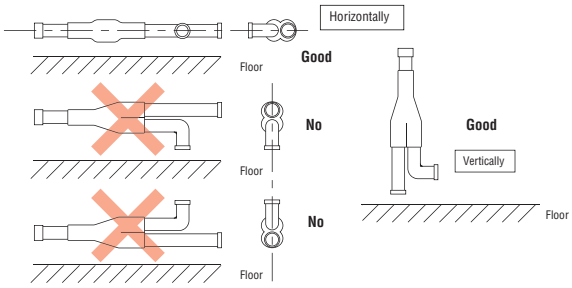

Combination outdoor unit piping examples:

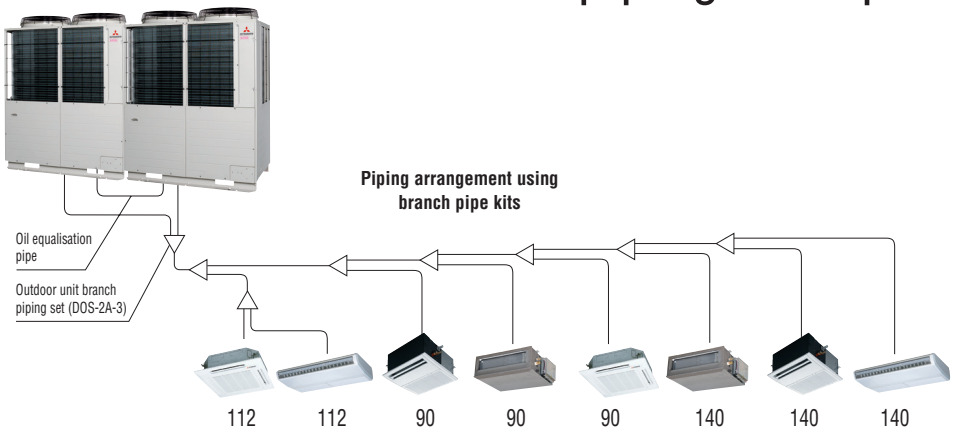

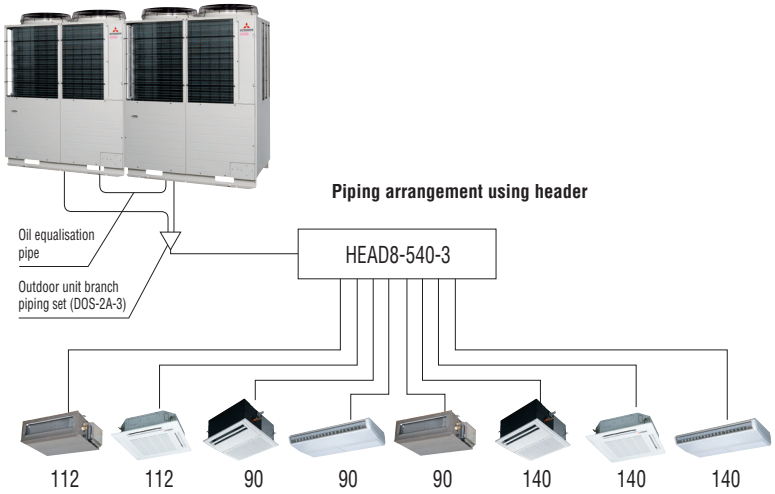

Outdoor unit's branch piping set

Outdoor unit	Branch piping set
For two units (for 615~1120)	DOS-2A-3
For three units (for 1200~1680)	DOS-3A-3

Indoor unit's first branch piping set

Total capacity of indoor units	Branch piping set	Header set	
		Model	Branches
~179	DIS-22-1G	HEAD4-22-1G	Max 4 branches
180~370	DIS-180-1G	HEAD6-180-1G	Max 6 branches
371~539	DIS-371-1G	HEAD8-371-2	Max 8 branches
540~	DIS-540-3	HEAD8-540-3	Max 8 branches

KXZ electrical wiring – power supply

KXZ new design includes greatly simplified wiring requirements utilising a 'polarity-free' two wire control loop connecting the indoor units.

Power wiring

Cables can be laid through the front, right, left or bottom of the outdoor unit casing.
Separate power supplies should be used for the outdoor unit (3phase) and the indoor units (1phase).
Only control wiring is connected from outdoor to indoor unit.

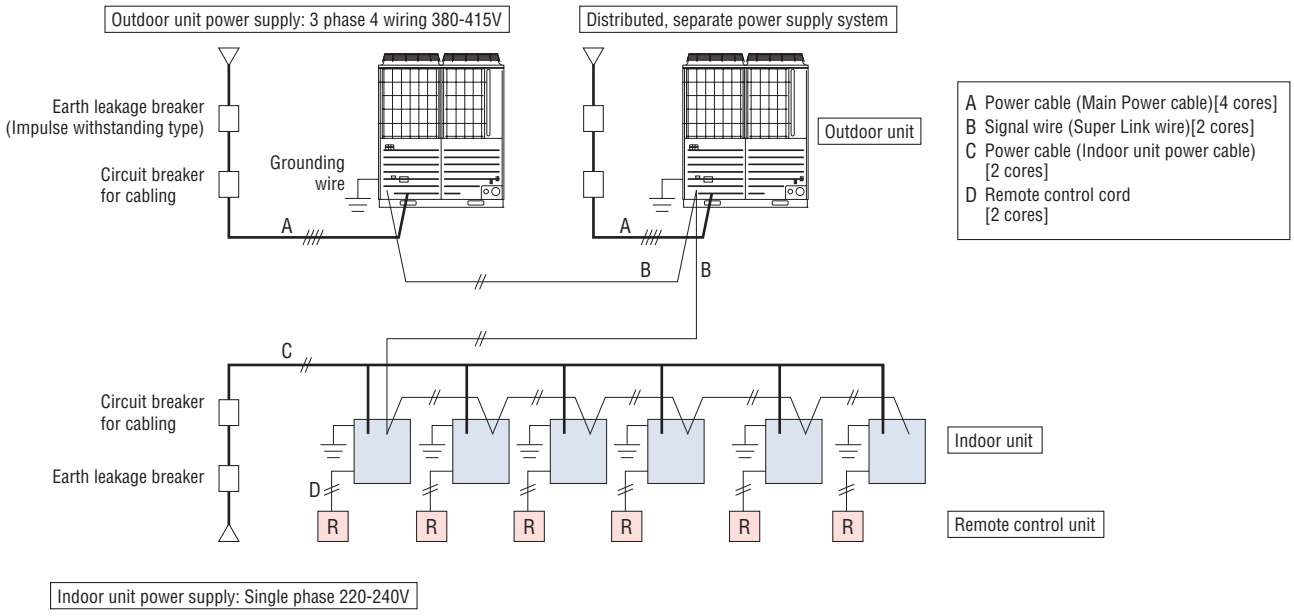

CAUTION

If the earth leakage breaker is exclusively for ground fault protection, then you will need to install a circuit breaker for wiring work.

KXZ outdoor unit mechanical compartment

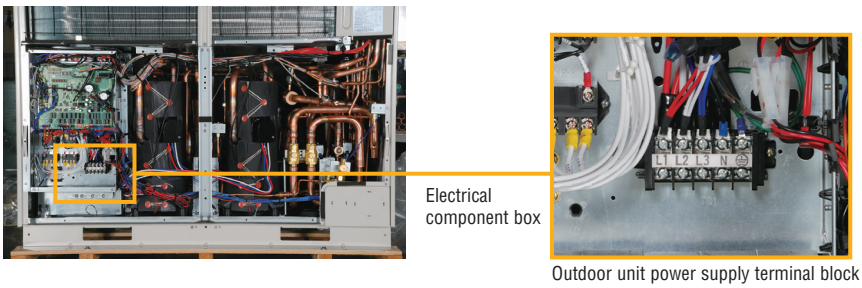

Outdoor unit power supply terminal block

KXZ electrical wiring – control wiring

1. The control wiring is 5 Volt DC, non-polarised, two wire connection notated as 'A1' and 'B1'. This 'AB' wiring connects outdoor unit to indoor unit and indoor unit to indoor unit.
2. This wiring must be a 2-core shielded cable size 0.75mm² or 1.25mm².

	0.75mm²	1.25mm²
~1000m	YES	YES
1000~1500m	YES	NO

3. We recommend the both ends of the shield of the cable are connected to ground (earth) at all the indoor units and outdoor units.
4. When plural outdoor units are used,
   •Connect the signal cable between indoor and outdoor units and the signal cable between outdoor units belonging to the same refrigerant line to A1 and B1.
   •Connect the signal line between outdoor units on different refrigerant lines to A2 and B2.
5. For current specification of 2-core (AB) wiring, please consult your MHI dealer.

(1) When one outdoor unit is used

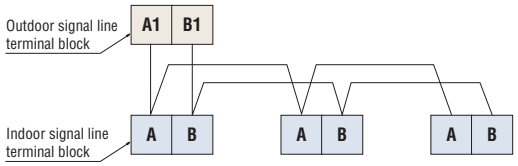

○ Indoor and outdoor signal lines do not have a polarity.
Any of the connections in the following illustration can be made.

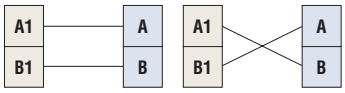

(2) When plural outdoor units are used

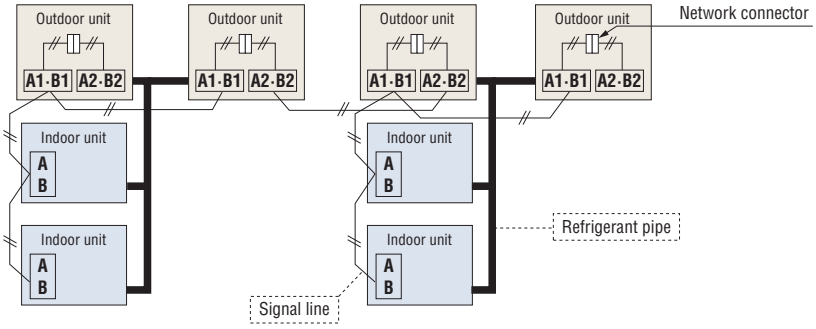

(a) The maximum number of indoor units that can be connected in a system is 128 and it is possible to configure outdoor units and/or indoor units as an outdoor or indoor unit group connected with each other with two wires.

(b) The signal wires can also be connected using the method shown below.

(3) The signal lines can also be connected using the method shown below.

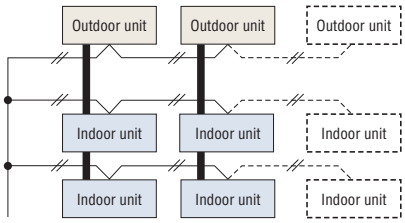

Important ○ Loop wiring prohibited

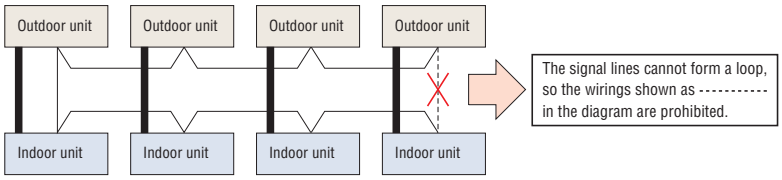

Remote control wiring specifications

For interconnecting wiring between the remote control and indoor units (XY wiring) use 2-core cable size 0.3mm². The maximum length of 2-core cable is 600 metres. Where the 2-core wiring exceeds 100m, use the wire size detailed on the table below.

Length (m)	Wire size
100 to 200	0.5mm² x 2 core
To 300	0.75mm² x 2 core
To 400	1.25mm² x 2 core
To 600	2.0mm² x 2 core

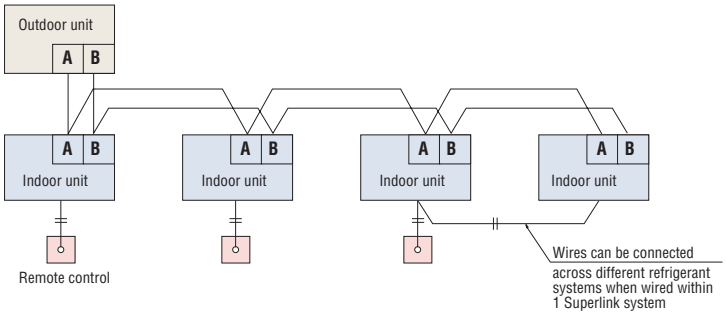

Indoor units
Ceiling Cassette -4way- FDT

Model No.

FDT28KXE6F
FDT36KXE6F
FDT45KXE6F
FDT56KXE6F
FDT71KXE6F
FDT90KXE6F
FDT112KXE6F
FDT140KXE6F
FDT160KXE6F



Remote control (option)

Wired



RC-EX1A



RC-E5



RCH-E3

Wireless



RCN-T-36W-E

Individual flap control system

According to room temperature conditions, four directions of air flow can be controlled by individual flap as preferred.
Individual flap control is available even after installation.



Due to optimization of outlet design of air flow with our new advanced technology, sufficient air flow is secured and long reach of air flow is realized.

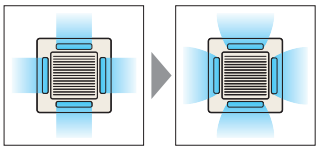

The thinnest design

Thanks to new design of heat exchanger changed from 2 parts to 1 part, the height of indoor unit is reduced drastically.
Furthermore applying DC fan motors to FDT models, the highest energy efficiency level, reduction of weight and significant compact design are realized.

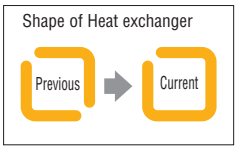

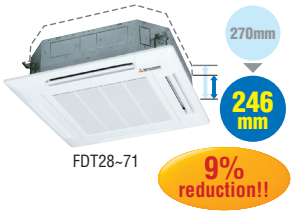

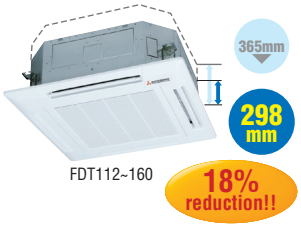

Flap control system

Selection of flap position is possible. Individual flaps can be set at different angles.

*RCH-E3 is not applicable to the Individual flap control system and the flap control system.

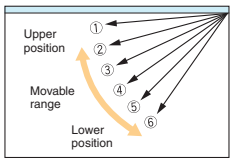



for person who is far from the indoor unit

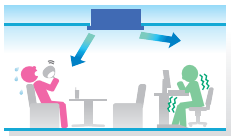

for both persons who are feeling hot or cold

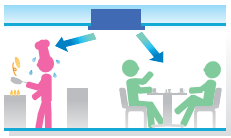

can cool both the kitchen and the guests

Specifications

Item		Model	FDT28KXE6F	FDT36KXE6F	FDT45KXE6F	FDT56KXE6F	FDT71KXE6F	FDT90KXE6F	FDT112KXE6F	FDT140KXE6F	FDT160KXE6F
Nominal cooling capacity		kW	2.8	3.6	4.5	5.6	7.1	9.0	11.2	14.0	16.0
Nominal heating capacity		kW	3.2	4.0	5.0	6.3	8.0	10.0	12.5	16.0	18.0
Power source			1 Phase 220-240V, 50Hz								
Power consumption	Cooling	kW	0.03-0.03			0.04-0.04	0.08-0.08	0.15-0.15			
	Heating		0.03-0.03			0.04-0.04	0.08-0.08	0.15-0.15			
Sound power level		dB(A)	53			60	64	65	—	—	—
Sound pressure level ※		dB(A)	Hi:33 Me:31 Lo:30					Hi:40 Me:37 Lo:35		Hi:42 Me:40 Lo:37	Hi:43 Me:41 Lo:38
Exterior dimensions H x W x D		mm	Unit:246x840x840 Panel:35x950x950					Unit:298x840x840 Panel:35x950x950			
Net weight		kg	Unit:22 Panel:5.5			Unit:24 Panel:5.5		Unit:27 Panel:5.5			
Air flow ※		m³/min	Hi:18 Me:16 Lo:14					Hi:27 Me:24 Lo:20		Hi:30 Me:27 Lo:23	
Outside air intake			Possible								
Panel			T-PSA-3BW-E								
Air filter, Q'ty			Pocket Plastic net x1 (Washable)								
Remote control(option)			wired:RC-EX1A, RC-E5, RCH-E3 wireless:RCN-T-36W-E								
Installation data Refrigerant piping size		mm(in)	Liquid line:ø6.35(1/4") Gas line:ø9.52(3/8")	Liquid line:ø6.35(1/4") Gas line:ø12.7(1/2")			Liquid line:ø9.52(3/8") Gas line:ø15.88(5/8")				

1. The data are measured under the following conditions(ISO-T1). Cooling: Indoor temp. of 27°CDB, 19°CWB, and outdoor temp. of 35°CDB. Heating: Indoor temp. of 20°CDB, and outdoor temp. of 7°CDB, 6°CWB.
2. Sound pressure level indicates the value in an anechoic chamber. During operation these values are somewhat higher due to ambient conditions.

※ Powerful-Hi can be selected. Sound pressure level: FDT28/36/45 37dB(A), FDT56 39dB(A), FDT71 46dB(A), FDT90/112/140/160 51dB(A). Air flow: FDT28/36/45/56 20m³/min, FDT71 28m³/min, FDT90/112/140/160 37m³/min.

Dimensions

All measurements in mm.

FDT28KXE6F, 36KXE6F, 45KXE6F, 56KXE6F, 71KXE6F

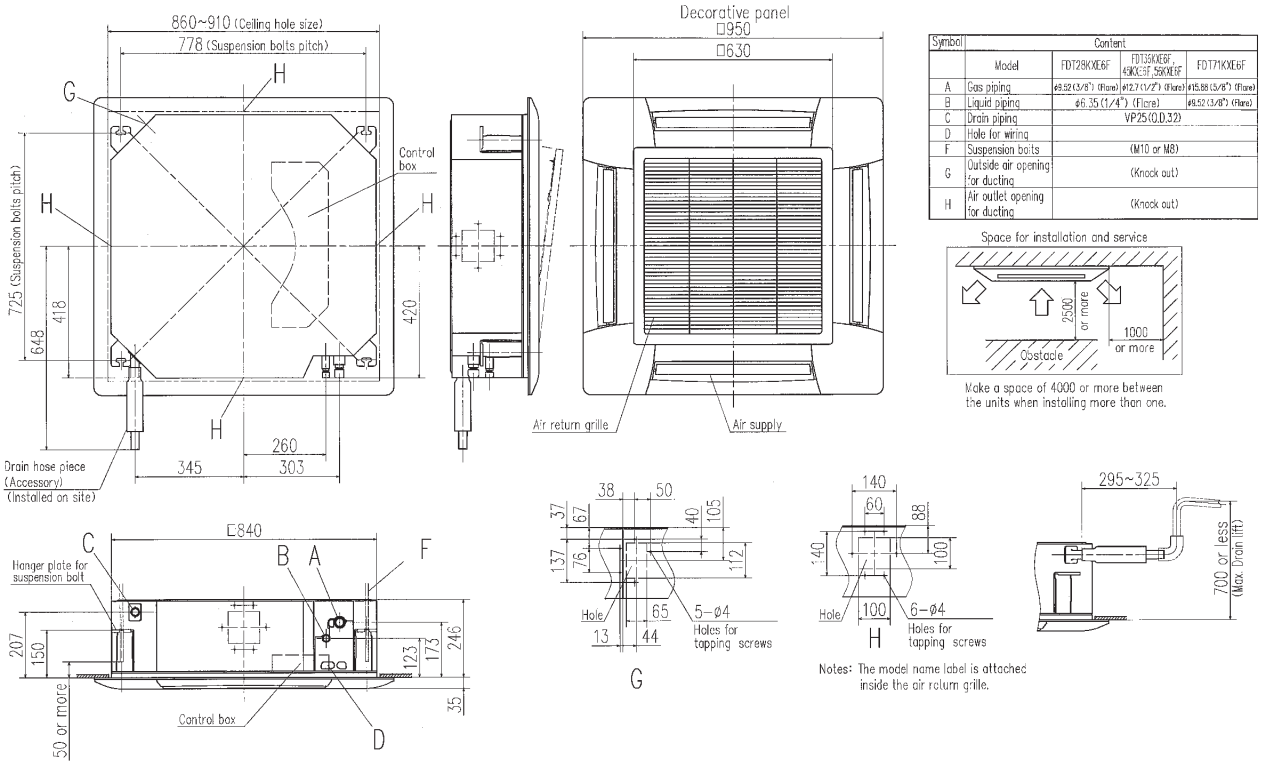

Symbol	Content		
	Model	FDT28KXE6F	FDT36KXE6F, 45KXE5F, 56KXE6F	FDT71KXE6F
A	Gas piping	ø9.52 (3/8") (Flare)	ø12.7 (1/2") (Flare)	ø15.88 (5/8") (Flare)
B	Liquid piping	ø6.35 (1/4") (Flare)		ø9.52 (3/8") (Flare)
C	Drain piping	VP25 (O.D.32)		
D	Hole for wiring			
F	Suspension bolts	(M10 or M8)		
G	Outside air opening for ducting	(Knock out)		
H	Air outlet opening for ducting	(Knock out)		

FDT90KXE6F, 112KXE6F, 140KXE6F, 160KXE6F

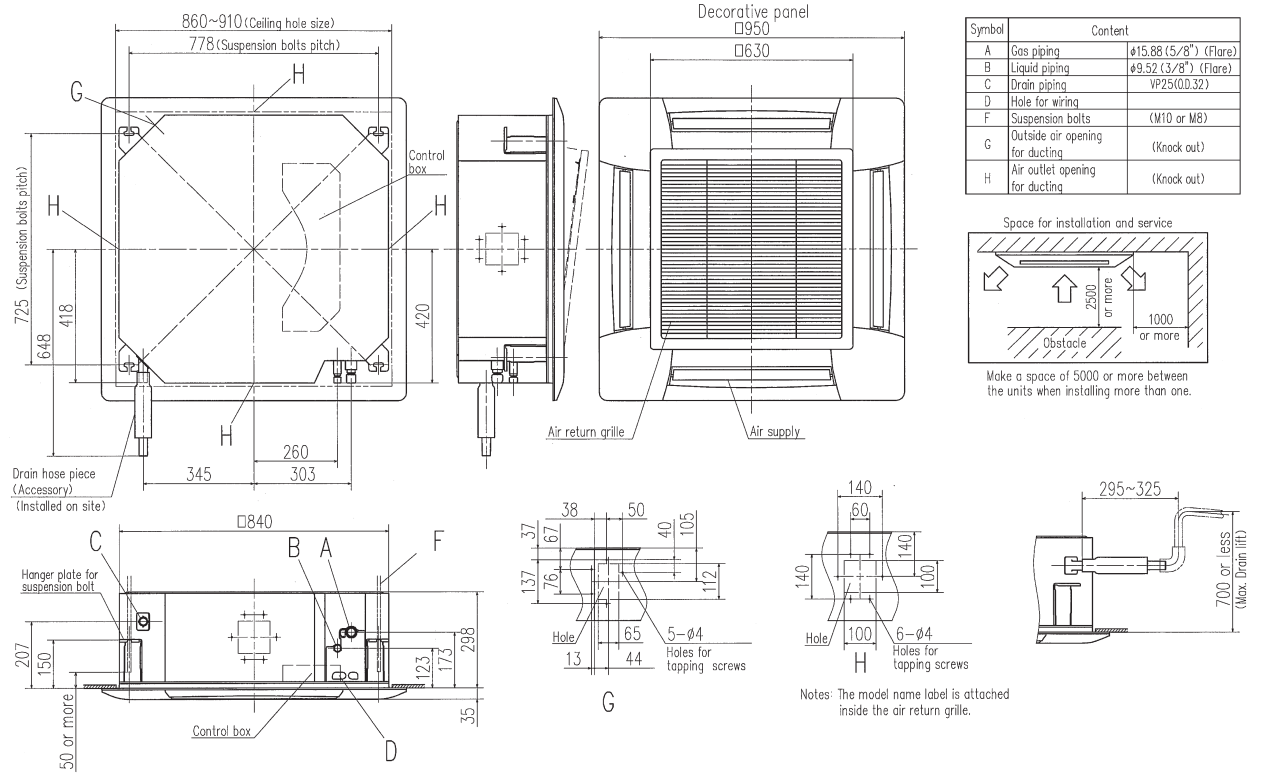

Symbol	Content	
A	Gas piping	ø15.88 (5/8") (Flare)
B	Liquid piping	ø9.52 (3/8") (Flare)
C	Drain piping	VP25 (O.D.32)
D	Hole for wiring	
F	Suspension bolts	(M10 or M8)
G	Outside air opening for ducting	(Knock out)
H	Air outlet opening for ducting	(Knock out)

Ceiling Cassette -4way Compact (600x600mm)- FDTC

Model No.

FDTC15KXE6F
FDTC22KXE6F
FDTC28KXE6F
FDTC36KXE6F
FDTC45KXE6F
FDTC56KXE6F

Fits into standard 600 x 600 ceiling



Remote control (option)

Wired



RC-EX1A RC-E5 RCH-E3

Wireless



RCN-TC-24W-ER

Taking OA (Outside Air) into inside

OA Spacer TC-OAS-E (option)
Joint Duct TC-OAD-E (option)

Utilizing OA spacer which comes as optional equipment, outside air can be taken inside.

Using 1 joint duct:
OA up to 1.3m³/min.
Using 2 joint ducts:
OA from 1.3 to 2.6m³/min.

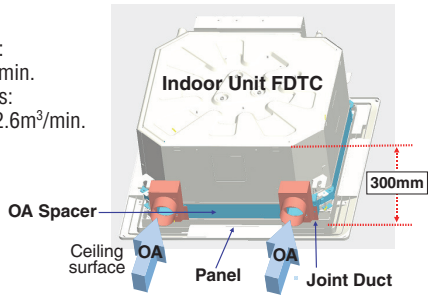

Quiet operation (Sound pressure level in the Lo mode.)

The industry's lowest sound pressure level:25dB(A) of FDTC15KXE6F was achieved by Optimizing fan speed and distributor size.

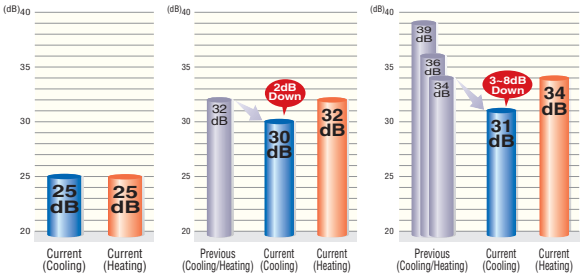

Individual flap control system

According to room temperature conditions, four directions of air flow can be controlled by individual flap as preferred.
Individual flap control is available even after installation.



Flap control system

Selection of flap position is possible. Individual flaps can be set at different angles.

★RCH-E3 is not applicable to the Individual flap control system and the flap control system.

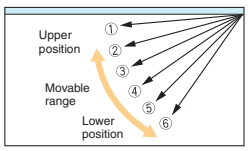

Specifications

Item		Model	FDTC15KXE6F	FDTC22KXE6F	FDTC28KXE6F	FDTC36KXE6F	FDTC45KXE6F	FDTC56KXE6F
Nominal cooling capacity		kW	1.5	2.2	2.8	3.6	4.5	5.6
Nominal heating capacity		kW	1.7	2.5	3.2	4.0	5.0	6.3
Power source			1 Phase 220-240V, 50Hz					
Power consumption	Cooling	kW	0.02-0.02	0.03-0.03			0.05-0.05	
	Heating		0.02-0.02	0.03-0.03			0.05-0.05	
Sound power level		dB(A)	56			58	60	
Sound pressure level ※	Cooling	dB(A)	Hi:32 Me:28 Lo:25	Hi:35 Me:33 Lo:30		Hi:38 Me:36 Lo:31	Hi:40 Me:37 Lo:31	Hi:45 Me:39 Lo:31
	Heating		Hi:32 Me:28 Lo:25	Hi:35 Me:33 Lo:32		Hi:38 Me:36 Lo:34	Hi:40 Me:37 Lo:34	Hi:45 Me:39 Lo:34
Exterior dimensions H x W x D		mm	Unit:248x570x570 Panel:35x700x700					
Net weight		kg	Unit:14 Panel:3.5			Unit:15 Panel:3.5		
Air flow ※	Cooling	m³/min	Hi:7 Me:5.5 Lo:4.5	Hi:9.5 Me:8.5 Lo:7		Hi:10 Me:9 Lo:7	Hi:11 Me:9 Lo:7	Hi:13 Me:10 Lo:7
	Heating		Hi:7 Me:5.5 Lo:4.5	Hi:9.5 Me:8.5 Lo:8		Hi:10 Me:9 Lo:8	Hi:11 Me:9 Lo:8	Hi:13 Me:10 Lo:8
Outside air intake			Possible with OA Spacer TC-OAS-E & Joint Duct TC-OAD-E					
Panel			TC-PSA-25W-E					
Air filter, Q'ty			Pocket Plastic net x1 (Washable)					
Remote control(option)			wired:RC-EX1A, RC-E5, RCH-E3 wireless:RCN-TC-24W-ER					
Installation data Refrigerant piping size		mm(in)	Liquid line:ø6.35(1/4") Gas line:ø9.52(3/8")			Liquid line:ø6.35(1/4") Gas line:ø12.7(1/2")		

1. The data are measured under the following conditions(ISO-T1). Cooling: Indoor temp. of 27°CDB, 19°CWB, and outdoor temp. of 35°CDB. Heating: Indoor temp. of 20°CDB, and outdoor temp. of 7°CDB, 6°CWB.
2. Sound pressure level indicates the value in an anechoic chamber. During operation these values are somewhat higher due to ambient conditions.

※ Powerful-Hi can be selected. Sound pressure level: FDTC15 34dB(A), FDTC22/28 44dB(A), FDTC36 46dB(A), FDTC45 48dB(A), FDTC56 49dB(A). Air flow: FDTC15 8m³/min, FDTC22/28 12m³/min, FDTC36 13m³/min, FDTC45 15m³/min, FDTC56 16m³/min.

Dimensions

All measurements in mm.

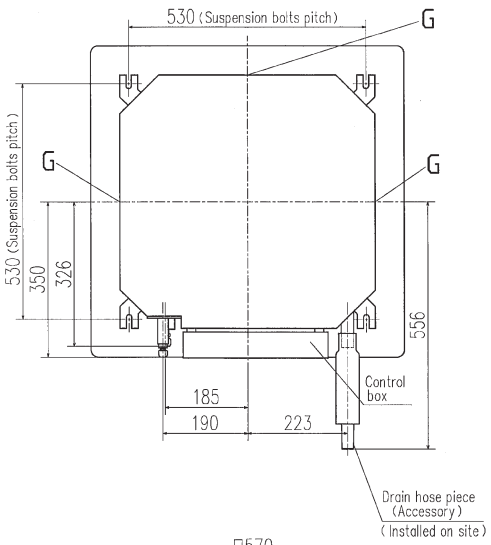

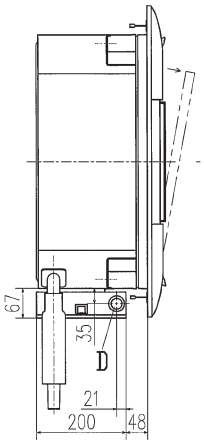

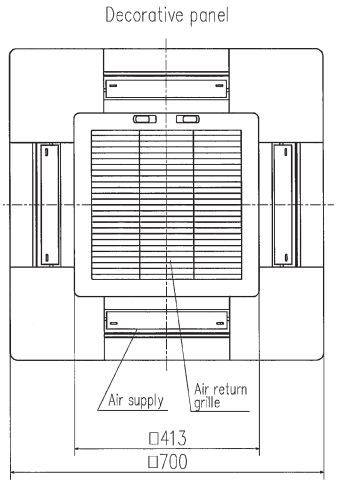

Notes (1) The model name label is attached on the control box lid.
(2) This unit is designed for 2x2 grid ceiling.
If it is installed on a ceiling other than 2x2 grid ceiling, provide an inspection port on the control box side.

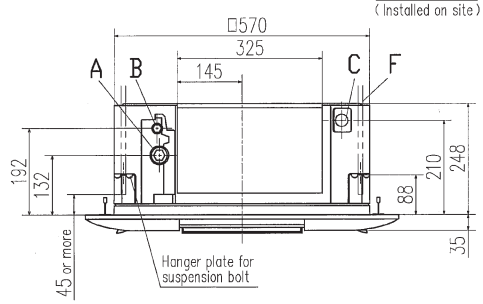

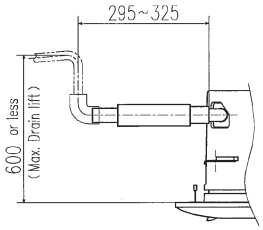

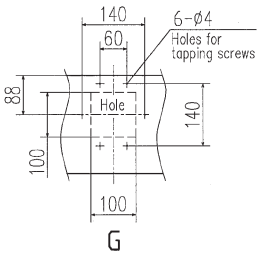

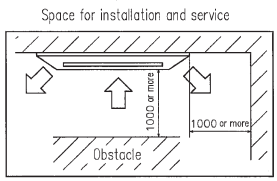

Make a space of 4000 or more between the units when installing more than one.

Symbol	Content		
	Model	FDTC13KXE6F, 22KXE6F, 28KXE6F	FDTC36KXE6F, 45KXE6F, 56KXE6F
A	Gas piping	ϕ9.52 (3/8") (Flare)	ϕ12.7 (1/2") (Flare)
B	Liquid piping	ϕ6.35 (1/4") (Flare)	
C	Drain piping	VP25(O.D.32)	
D	Hole for wiring	ϕ25	
F	Suspension bolts	(M10 or M8)	
G	Air outlet opening for ducting	(Knock out)	

Ultra slim design at just 248mm above the ceiling

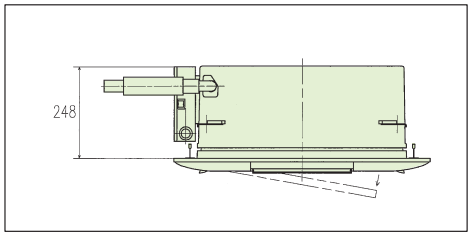

Condensate drain pump included as standard

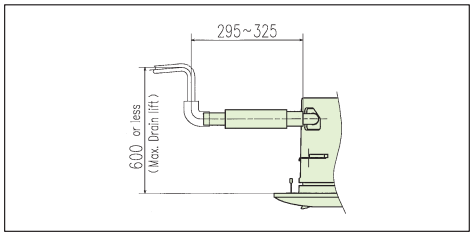

Ceiling Cassette -2way- FDTW

Model No.

FDTW28KXE6F	FDTW90KXE6F
FDTW45KXE6F	FDTW112KXE6F
FDTW56KXE6F	FDTW140KXE6F
FDTW71KXE6F	



FDTW28~71



FDTW90~140

Remote control (option)

Wired



RC-EX1A RC-E5 RCH-E3

Wireless



RCN-TW-E

Individual flap control system

According to room temperature conditions, four directions air flow can be controlled individually by flap control system.
Due to optimization of outlet design of air flow our new advanced technology, sufficient air flow is secured and long reach of air flow is achieved.

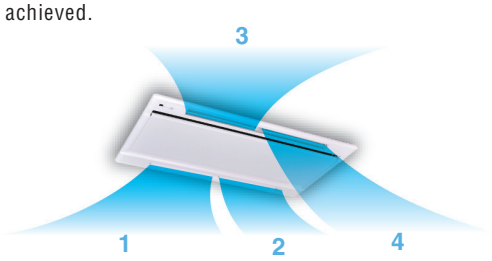

Flap control system

The flap can swing within the range of upper and lower flap position selected with wired remote control.

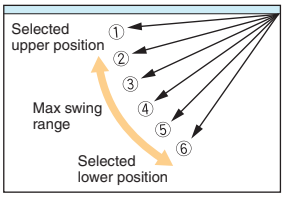

＊Wireless remote control and RCH-E3 is not applicable to the individual flap control system and the flap control system.

Installation workability

Drainage spout

Drainage flow test can be done easily by use of this drainage spout.



Transparent access hole to drain pan

Dirt condition of the bottom of a drain pan can be checked through this transparent access hole without removing drain pan.

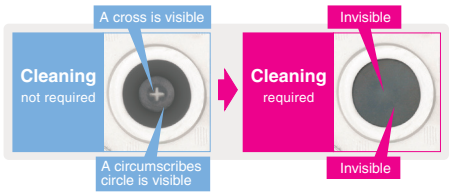

750mm Drain Pump

Drain can be discharged upward by 750mm from the ceiling surface close to the indoor unit. It allows a piping layout with a high degree of freedom depending on the installation location.

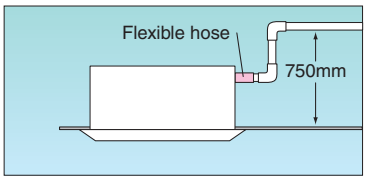

Specifications

Item		Model	FDTW28KXE6F	FDTW45KXE6F	FDTW56KXE6F	FDTW71KXE6F	FDTW90KXE6F	FDTW112KXE6F	FDTW140KXE6F
Nominal cooling capacity		kW	2.8	4.5	5.6	7.1	9.0	11.2	14.0
Nominal heating capacity		kW	3.2	5.0	6.3	8.0	10.0	12.5	16.0
Power source			1 Phase 220-240V, 50Hz						
Power consumption	Cooling	kW	0.09-0.09	0.10-0.10		0.14-0.14	0.19-0.19		
	Heating		0.09-0.09	0.10-0.10		0.14-0.14	0.19-0.19		
Sound power level		dB(A)	58				65	—	
Sound pressure level ※		dB(A)	Hi:38 Me:34 Lo:31				Hi:45 Me:41 Lo:37		
Exterior dimensions H x W x D		mm	Unit:325x820x620 Panel:20x1120x680				Unit:325x1535x620 Panel:20x1835x680		
Net weight		kg	Unit:20 Panel:8.5	Unit:21 Panel:8.5		Unit:23 Panel:8.5	Unit:35 Panel:13		
Air flow ※		m³/min	Hi:12 Me:10 Lo:9				Hi:27 Me:23 Lo:20		
Outside air intake			Possible						
Panel			TW-PSA-26W-E				TW-PSA-46W-E		
Air filter, Q'ty			Pocket Plastic net x2 (Washable)				Pocket Plastic net x3 (Washable)		
Remote control(option)			wired:RC-EX1A, RC-E5, RCH-E3 wireless:RCN-TW-E						
Installation data Refrigerant piping size		mm(in)	Liquid line:ø6.35(1/4") Gas line:ø9.52(3/8")	Liquid line:ø6.35(1/4") Gas line:ø12.7(1/2")		Liquid line:ø9.52(3/8") Gas line:ø15.88(5/8")			

1. The data are measured under the following conditions(ISO-T1). Cooling: Indoor temp. of 27°CDB, 19°CWB, and outdoor temp. of 35°CDB. Heating: Indoor temp. of 20°CDB, and outdoor temp. of 7°CDB, 6°CWB.
2. Sound pressure level indicates the value in an anechoic chamber. During operation these values are somewhat higher due to ambient conditions.

※ Powerful-Hi can be selected. Sound pressure level: FDTW28/45/56/71 42dB(A), FDTW90/112/140 48dB(A). Air flow: FDTW28/45/56/71 14.5m³/min, FDTW90/112/140 31m³/min.

Dimensions

All measurements in mm.

FDTW28KXE6F, 45KXE6F, 56KXE6F, 71KXE6F

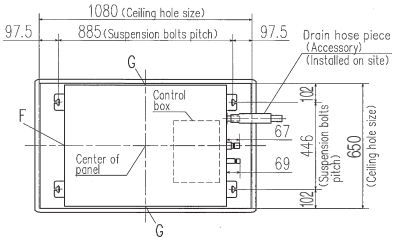

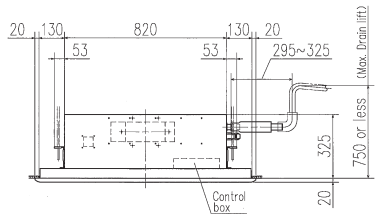

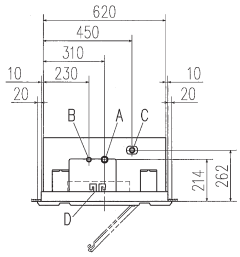

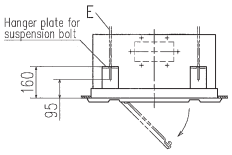

Symbol	Content			
	Model	28	45,56	71
A	Gas piping	ϕ9.52 (3/8") (flare)	ϕ12.7 (1/2") (flare)	ϕ15.88 (5/8") (flare)
B	Liquid piping	ϕ6.35 (1/4") (Flare)		ϕ9.52 (3/8") (flare)
C	Drain piping	VP25 (I.D. 25, O.D. 32) Note(2)		
D	Hole for wiring			
E	Suspension bolts	(M10)		
F	Outside air opening for ducting	(Knock out)		
G	Air outlet opening for ducting	(Knock out)		

Notes (1) The model name label is attached on the lid of the control box.
(2) Prepare the connecting socket (VP25) on site.

Space for installation and service

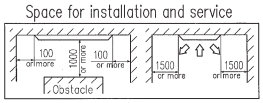

Make a space of 4000 or more between the units when installing more than one.

Decorative panel

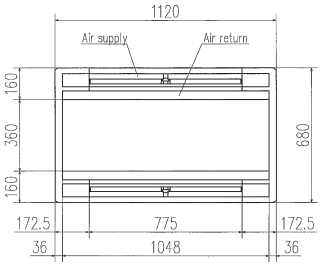

FDTW90KXE6F, 112KXE6F, 140KXE6F

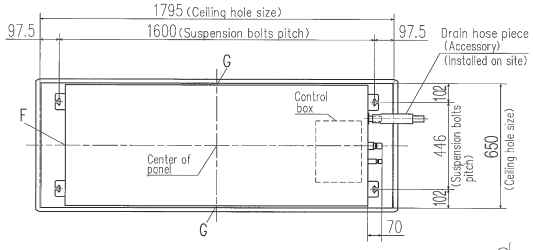

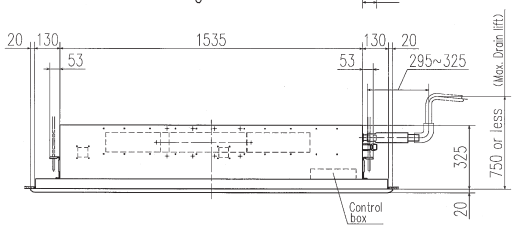

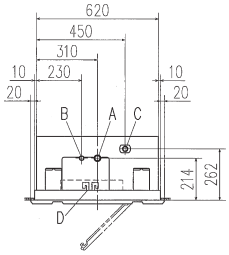

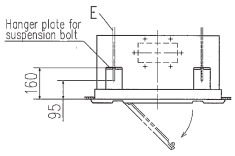

Symbol	Content	
A	Gas piping	ϕ15.88 (5/8") (Flare)
B	Liquid piping	ϕ9.52 (3/8") (Flare)
C	Drain piping	VP25 (I.D. 25, O.D. 32) Note(2)
D	Hole for wiring	
E	Suspension bolts	(M10)
F	Outside air opening for ducting	(Knock out)
G	Air outlet opening for ducting	(Knock out)

Notes (1) The model name label is attached on the lid of the control box.
(2) Prepare the connecting socket (VP25) on site.

Space for installation and service

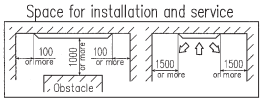

Make a space of 5000 or more between the units when installing more than one.

Decorative panel

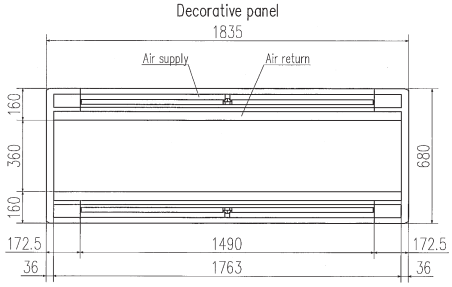

Ceiling Cassette -1way- FDTS

Model No.
FDTS45KXE6F
FDTS71KXE6F



Remote control (option)

Wired



RC-EX1A



RC-E5



RCH-E3

Wireless





RCN-TS-E

Individual flap control system

Two directions of air flow can be controlled individually by flap control system.

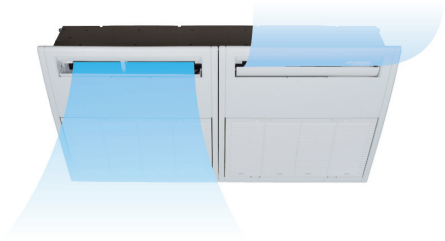

Flap control system

The flap can swing within the range of upper and lower flap position selected with wired remote control.

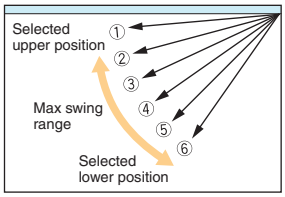

*Wireless remote control and RCH-E3 is not applicable to the individual flap control system and the flap control system.

Compact design

Indoor unit size (W:1,150 x D:565) brings easy installation for 1,200 x 600 ceiling and Panel size (1,250 x 650) is suitable for 1,200 x 600 ceiling. Height is the industry's lowest height level 220mm and weight is 27/28kg only.

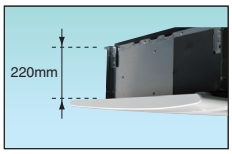

600mm Drain Pump

Drain can be discharged upward by 600mm from the ceiling surface close to the indoor unit.
It allows a piping layout with a high degree of freedom depending on the installation location.

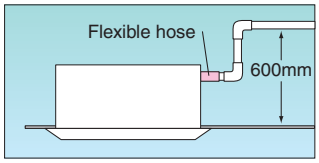

Wireless remote control

For wireless remote control simply attach an additional panel with infrared receiver on the right side of the main decorative panel.

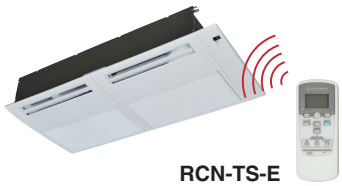

RCN-TS-E

Specifications

Item		Model	FDTS45KXE6F	FDTS71KXE6F
Nominal cooling capacity		kW	4.5	7.1
Nominal heating capacity		kW	5.0	8.0
Power source			1 Phase 220-240V, 50Hz	
Power consumption	Cooling	kW	0.04-0.04	0.09-0.09
	Heating		0.04-0.04	0.09-0.09
Sound power level		dB(A)	60	61
Sound pressure level ※		dB(A)	Hi:40 Me:38 Lo:35	Hi:46 Me:41 Lo:36
Exterior dimensions H x W x D		mm	Unit:220x1150x565 Panel:35x1250x650	
Net weight		kg	Unit:27 Panel:5	Unit:28 Panel:5
Air flow ※		m³/min	Hi:12 Me:11 Lo:9.5	Hi:15 Me:12 Lo:9.5
Outside air intake			Possible	
Panel			TS-PSA-3AW-E	
Air filter, Q'ty			Pocket Plastic net x2 (Washable)	
Remote control(option)			wired:RC-EX1A, RC-E5, RCH-E3 wireless:RCN-TS-E	
Installation data Refrigerant piping size		mm(in)	Liquid line:ø6.35(1/4") Gas line:ø12.7(1/2")	Liquid line:ø9.52(3/8") Gas line:ø15.88(5/8")

1. The data are measured under the following conditions(ISO-T1). Cooling: Indoor temp. of 27°CDB, 19°CWB, and outdoor temp. of 35°CDB. Heating: Indoor temp. of 20°CDB, and outdoor temp. of 7°CDB, 6°CWB.
2. Sound pressure level indicates the value in an anechoic chamber. During operation these values are somewhat higher due to ambient conditions.

※ Powerful-Hi can be selected. Sound pressure level: FDTS45 42dB(A), FDTS71 49dB(A). Air flow: FDTS45 13m³/min, FDTS71 17m³/min.

Dimensions

All measurements in mm.

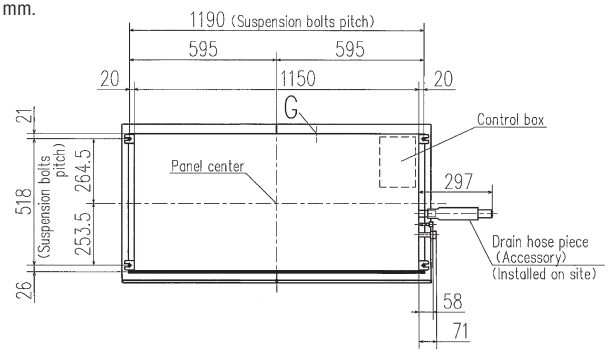

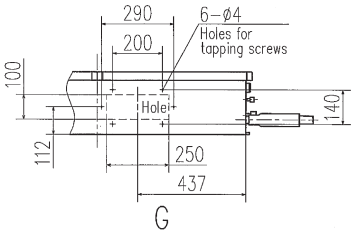

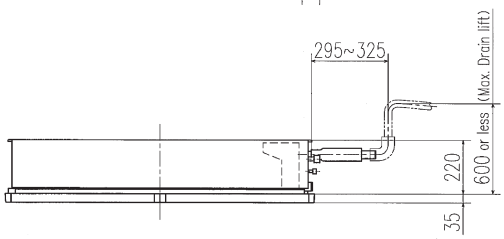

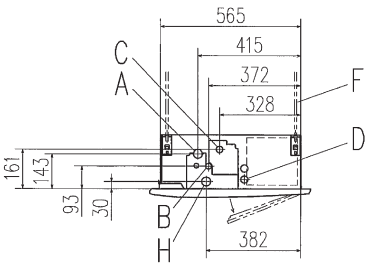

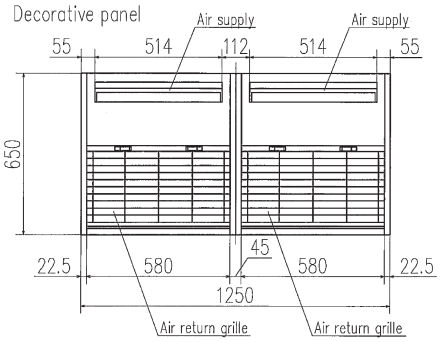

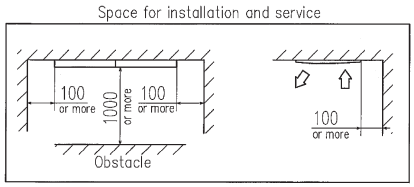

Make a space of 4000 or more between the units when installing more than one.

Symbol	Content		
	Model	45	71
A	Gas piping	ø12.7 (1/2") (Flare)	ø15.88 (5/8") (Flare)
B	Liquid piping	ø6.35 (1/4") (Flare)	ø9.52 (3/8") (Flare)
C	Drain piping	VP25 (I.D.25 , O.D.32) Note (2)	
D	Hole for wiring		
F	Suspension bolts	(M10)	
G	Outside air opening for ducting	(Knock out)	
H	Drain piping (Gravity drainage)	VP25 (I.D.25 , O.D.32)	

Ceiling Cassette -1way Compact- FDTQ

Model No.
FDTQ22KXE6F
FDTQ28KXE6F
FDTQ36KXE6F



Fits into standard 600 x 600 ceiling

Remote control (option)

Wired



RC-EX1A **RC-E5** **RCH-E3**

Wireless



RCN-KIT3-E

Compact design

- **Comfortable effective cooling for small rooms, with low fan speed air flow at just 5.4m³/min.**



Optional wide panel shown for solid ceiling

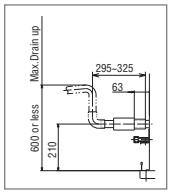

Condensate drain pump included as standard

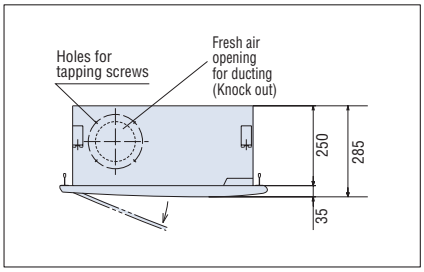

Ultra slim design at just 250mm above the ceiling

Specifications

Item	Model	FDTQ22KXE6F				FDTQ28KXE6F				FDTQ36KXE6F			
Panel Name		Direct blow panel		Duct panel		Direct blow panel		Duct panel		Direct blow panel		Duct panel	
Panel mode (Option)		TQ-PSA-15W-E	TQ-PSB-15W-E	QR-PNA-14W-ER	QR-PNB-14W-ER	TQ-PSA-15W-E	TQ-PSB-15W-E	QR-PNA-14W-ER	QR-PNB-14W-ER	TQ-PSA-15W-E	TQ-PSB-15W-E	QR-PNA-14W-ER	QR-PNB-14W-ER
Nominal cooling capacity	kW	2.2				2.8				3.6			
Nominal heating capacity	kW	2.5				3.2				4.0			
Power source		1 Phase 220-240V, 50Hz											
Power consumption Cooling	kW	0.05-0.07				0.05-0.07				0.05-0.07			
Power consumption Heating	kW	0.05-0.07				0.05-0.07				0.05-0.07			
Sound power level	dB(A)	60											
Sound pressure level ※	dB(A)	Hi:41 Me:38 Lo:33		Hi:41 Me:38 Lo:33		Hi:41 Me:38 Lo:33		Hi:41 Me:38 Lo:33		Hi:41 Me:38 Lo:33		Hi:41 Me:38 Lo:33	
Exterior dimensions H x W x D Unit	mm	250x570x570				250x570x570				250x570x570			
Exterior dimensions H x W x D Panel	mm	35x625x650	35x780x650	35x625x650	35x780x650	35x625x650	35x780x650	35x625x650	35x780x650	35x625x650	35x780x650	35x625x650	35x780x650
Net weight	kg	Unit:23 Panel:2.5	Unit:23 Panel:3	Unit:23 Panel:2.5	Unit:23 Panel:3	Unit:23 Panel:2.5	Unit:23 Panel:3	Unit:23 Panel:2.5	Unit:23 Panel:3	Unit:23 Panel:2.5	Unit:23 Panel:3	Unit:23 Panel:2.5	Unit:23 Panel:3
Air flow ※	m³/min	Hi:7 Me:6 Lo:5		Hi:7 Me:6 Lo:5		Hi:7 Me:6 Lo:5		Hi:7 Me:6 Lo:5		Hi:7 Me:6 Lo:5		Hi:7 Me:6 Lo:5	
Outside air intake		Possible											
Air filter, Q'ty		Pocket Plastic net x1 (Washable)											
Remote control(option)		wired:RC-EX1A, RC-E5, RCH-E3 wireless:RCN-KIT3-E											
Installation data Refrigerant piping size	mm(in)	Liquid line:ø6.35(1/4") Gas line:ø9.52(3/8")								Liquid line:ø6.35(1/4") Gas line:ø12.7(1/2")			

1. The data are measured under the following conditions(ISO-T1). Cooling: Indoor temp. of 27°CDB, 19°CWB, and outdoor temp. of 35°CDB. Heating: Indoor temp. of 20°CDB, and outdoor temp. of 7°CDB, 6°CWB.
2. Sound pressure level indicates the value in an anechoic chamber. During operation these values are somewhat higher due to ambient conditions.

※ Powerful-Hi can be selected. Sound pressure level: FDTQ22/38/36 45dB(A). Air flow: FDTQ22/38/36 8m³/min.

Dimensions

All measurements in mm.

Direct blow panel (TQ-PSA-15W-E)

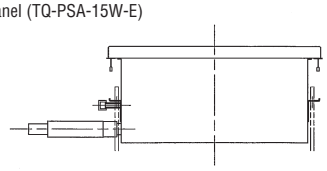

Direct blow panel (TQ-PSB-15W-E)

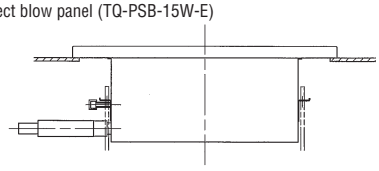

Symbol	Content		
	Model	FDTQ22KXE6F, 28KXE6F	FDTQ36KXE6F
A	Gas piping	ϕ9.52 (3/8") (Flare)	ϕ12.7 (1/2") (Flare)
B	Liquid piping	ϕ6.35 (1/4") (Flare)	
C	Drain piping	VP 25 (O.D.32)	
D	Hole for wiring	ϕ30	
E	Suspension bolts	M10	
F1,2	Outside air opening for ducting	(Knock out)	

Duct panel (QR-PNA-14W-ER)

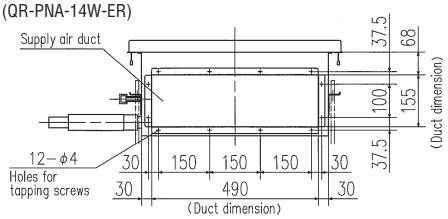

Duct panel (QR-PNB-14W-ER)

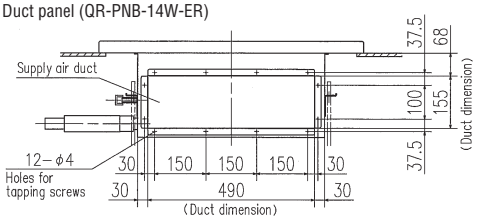

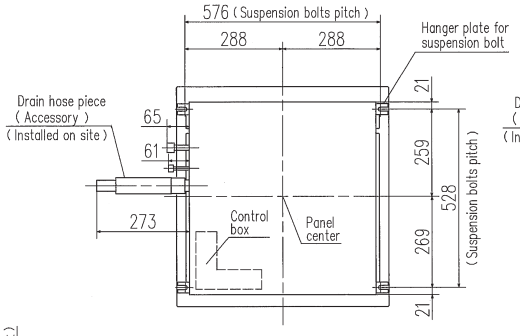

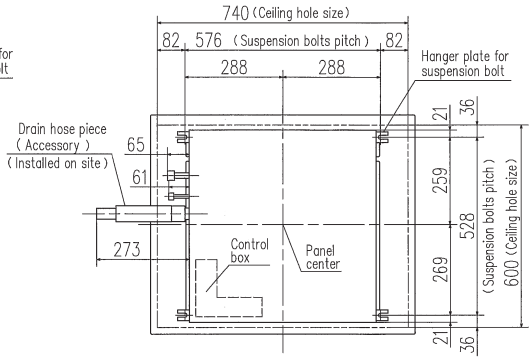

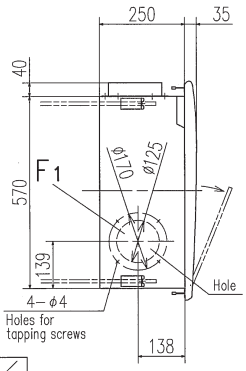

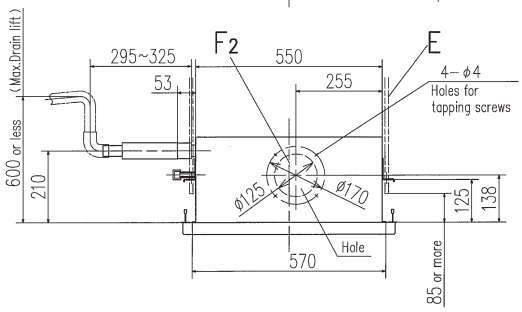

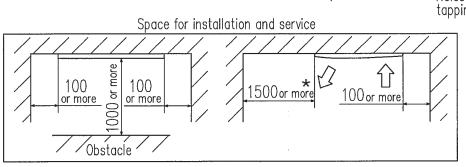

Make a space of 3000 or more between the units when installing more than one.

Notes

(1) The model name label is attached on the fan case inside the air return grille.
(2) Prepare the connecting socket (VP20) on site.
(3) This unit is designed for 2X2 grid ceiling.
* In case of Direct blow panel

Decorative panel

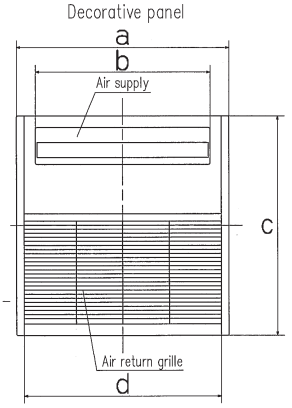

Decorative panel

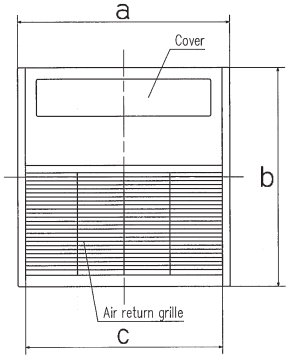

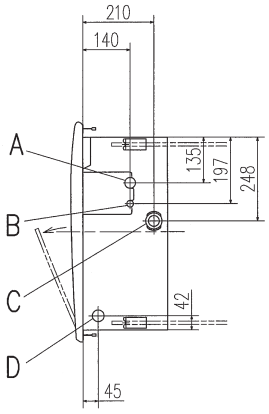

Dimension Table

Unit:mm

model	a	b	c	d
TQ-PSA-15W-E	625	514	650	580
TQ-PSB-15W-E	780	514	650	580

Dimension Table

Unit:mm

model	a	b	c
QR-PNA-14W-ER	625	650	580
QR-PNB-14W-ER	780	650	580

Duct Connected -High Static Pressure- FDU

Model No.

FDU45KXE6F
FDU56KXE6F
FDU71KXE6F
FDU90KXE6F
FDU112KXE6F
FDU140KXE6F
FDU160KXE6F



Remote control (option)

Wired



RC-EX1A RC-E5 RCH-E3

Wireless



RCN-KIT3-E

External Static Pressure(E.S.P) control

You can set External Static Pressure (E.S.P.) by method of manual setting on remote control. Indoor unit will control fan-speed to keep rated air flow volume at each fan speed setting. You can set required E.S.P. by wired remote control that calculated with the set air flow rate and pressure loss of the duct connected.



RC-E5

E.S.P. button

External Static Pressure (E.S.P.) can be set by E.S.P. button.

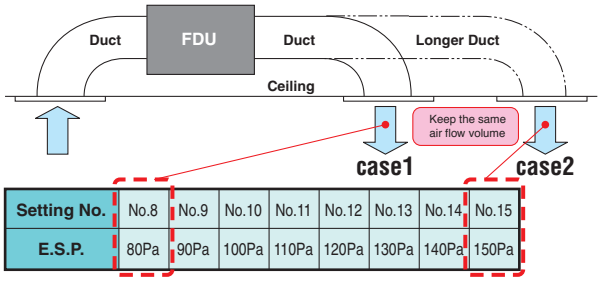

Setting No.	No.8	No.9	No.10	No.11	No.12	No.13	No.14	No.15
E.S.P.	80Pa	90Pa	100Pa	110Pa	120Pa	130Pa	140Pa	150Pa

*Range of 80~150 Pa is set at ex-factory default.
Range of 10~200 Pa is available by setting SW8-4 switch on at site.

<Expansion of external static pressure range>

Previous		Current
10~130Pa	➡	10~200Pa

Thin design



	Previous		Current	
FDU71KXE6F	297	➡	280	17mm less!!
FDU112/140KXE6F	350	➡	280	70mm less!!

Reduction of weight

	Previous		Current	
FDU71KXE6F	40	➡	34	6kg less!!
FDU90KXE6F	63	➡	34	29kg less!!
FDU112/140KXE6F	63	➡	54	9kg less!!

Reduction of sound pressure level

(FDU71KXE6F, in the Lo mode)

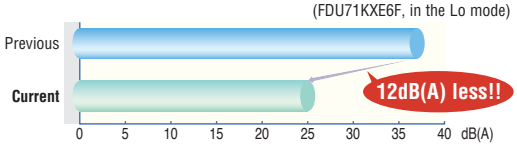

	Previous		Current	Lo mode
FDU90KXE6F	37	➡	25	12dB(A) less!!
FDU112KXE6F	38	➡	30	8dB(A) less!!
FDU140KXE6F	39	➡	29	10dB(A) less!!

Transparent inspection window

Dirt condition of the bottom of a drain pan can be checked through this transparent inspection window without removing drain pan. (Please refer to P44)

Specifications

Item		Model	FDU45KXE6F	FDU56KXE6F	FDU71KXE6F	FDU90KXE6F	FDU112KXE6F	FDU140KXE6F	FDU160KXE6F
Nominal cooling capacity		kW	4.5	5.6	7.1	9.0	11.2	14.0	16.0
Nominal heating capacity		kW	5.0	6.3	8.0	10.0	12.5	16.0	18.0
Power source			1 Phase 220-240V, 50Hz						
Power consumption	Cooling	kW	0.10-0.10		0.24-0.25		0.31-0.32	0.35-0.36	0.42-0.43
	Heating		0.10-0.10		0.24-0.25		0.31-0.32	0.35-0.36	0.42-0.43
Sound power level		dB(A)	60		65		—		
Sound pressure level ※		dB(A)	Hi:32 Me:29 Lo:26		Hi:33 Me:29 Lo:25		Hi:38 Me:36 Lo:30	Hi:40 Me:34 Lo:29	Hi:40 Me:35 Lo:30
Exterior dimensions H x W x D		mm	280x750x635		280x950x635		280x1370x740		
Net weight		kg	29		34		54		
Air flow ※		m³/min	Hi:10 Me:9 Lo:8		Hi:19 Me:15 Lo:10		Hi:28 Me:25 Lo:19	Hi:32 Me:26 Lo:20	Hi:35 Me:28 Lo:22
Maximum external static pressure		Pa	200						
Outside air intake			Possible						
Air filter			Procure locally						
Remote control(option)			wired:RC-EX1A, RC-E5, RCH-E3 wireless:RCN-KIT3-E						
Installation data Refrigerant piping size		mm(in)	Liquid line:ø6.35(1/4") Gas line:ø12.7(1/2")		Liquid line:ø9.52(3/8") Gas line:ø15.88(5/8")				

1. The data are measured under the following conditions(ISO-T1). Cooling: Indoor temp. of 27°CDB, 19°CWB, and outdoor temp. of 35°CDB. Heating: Indoor temp. of 20°CDB, and outdoor temp. of 7°CDB, 6°CWB. External static pressure of indoor unit is 60Pa.
2. Sound pressure level indicates the value in an anechoic chamber. During operation these values are somewhat higher due to ambient conditions.

※ Powerful-Hi can be selected. Sound pressure level: FDU45/56 37dB(A), FDU71/90 38dB(A), FDU112 44dB(A), FDU140 45dB(A),FDU160 47dB(A). Air flow: FDU45/56 13m³/min, FDU71/90 24m³/min, FDU112 36m³/min, FDU140 39m³/min, FDU160 48m³/min.

Dimensions

All measurements in mm.

FDU45KXE6F, 56KXE6F

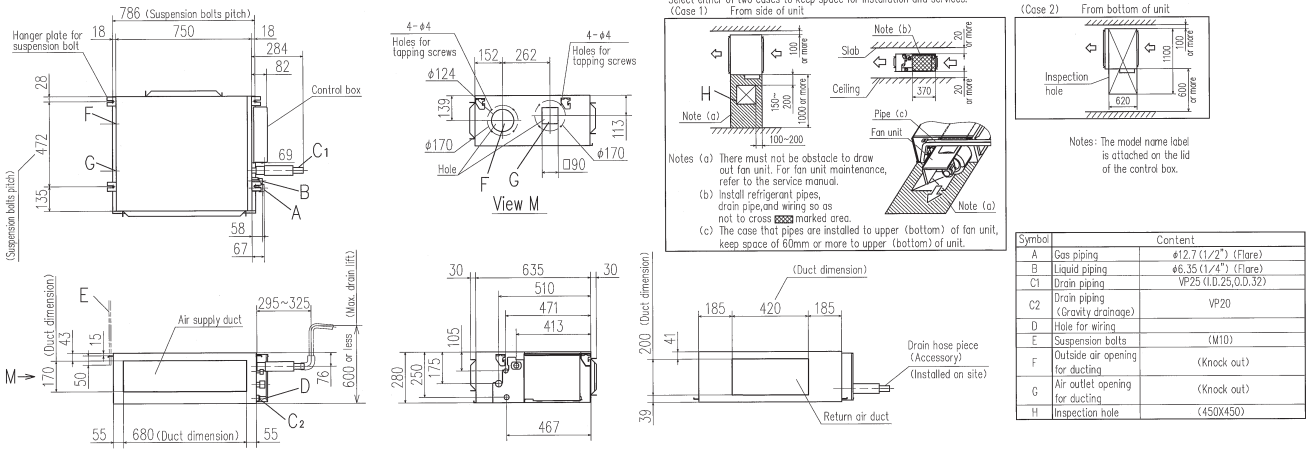

Symbol	Content	
A	Gas piping	ϕ12.7 (1/2") (Flare)
B	Liquid piping	ϕ6.35 (1/4") (Flare)
C1	Drain piping	VP25 (I.D.25,O.D.32)
C2	Drain piping (Gravity drainage)	VP20
D	Hole for wiring	
E	Suspension bolts	(M10)
F	Outside air opening for ducting	(Knock out)
G	Air outlet opening for ducting	(Knock out)
H	Inspection hole	(450X450)

FDU71KXE6F, 90KXE6F

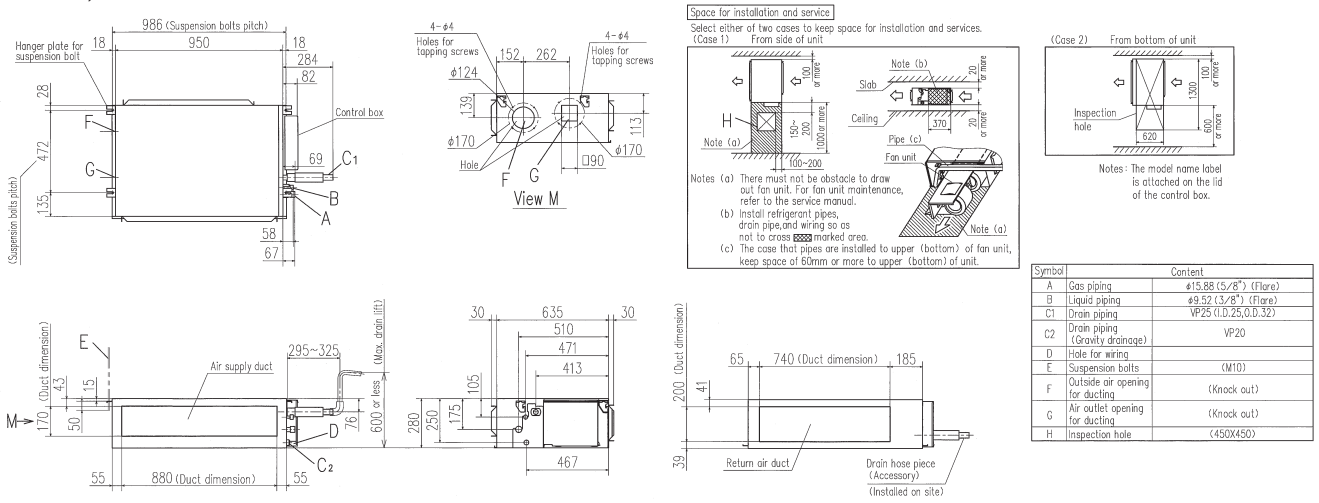

Symbol	Content	
A	Gas piping	ϕ15.88 (5/8") (Flare)
B	Liquid piping	ϕ9.52 (3/8") (Flare)
C1	Drain piping	VP25 (I.D.25,O.D.32)
C2	Drain piping (Gravity drainage)	VP20
D	Hole for wiring	
E	Suspension bolts	(M10)
F	Outside air opening for ducting	(Knock out)
G	Air outlet opening for ducting	(Knock out)
H	Inspection hole	(450X450)

FDU112KXE6F, 140KXE6F, 160KXE6F

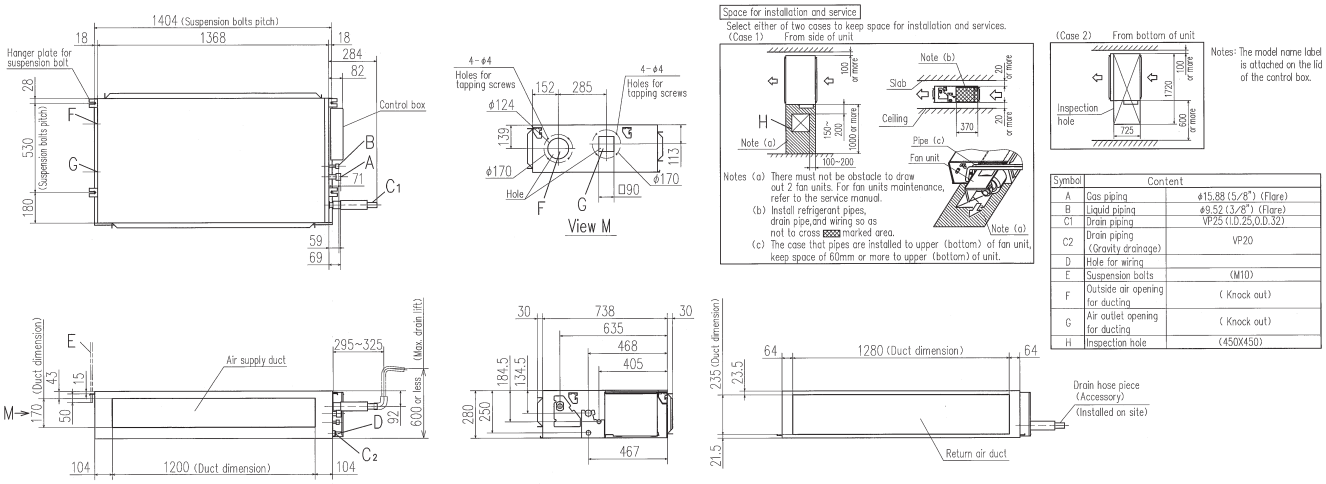

Symbol	Content	
A	Gas piping	ϕ15.88 (5/8") (Flare)
B	Liquid piping	ϕ9.52 (3/8") (Flare)
C1	Drain piping	VP25 (I.D.25,O.D.32)
C2	Drain piping (Gravity drainage)	VP20
D	Hole for wiring	
E	Suspension bolts	(M10)
F	Outside air opening for ducting	(Knock out)
G	Air outlet opening for ducting	(Knock out)
H	Inspection hole	(450X450)

Duct Connected -High Static Pressure- FDU

Model No.
FDU224KXZE1
FDU280KXZE1

NEW



Remote control (option)

Wired



RC-EX1A RC-E5 RCH-E3

Wireless



RCN-KIT3-E

External Static Pressure(E.S.P) control

You can set External Static Pressure (E.S.P.) by method of manual setting on remote control. Indoor unit will control fan-speed to keep rated air flow volume at each fan speed setting. You can set required E.S.P. by wired remote control that calculated with the set air flow rate and pressure loss of the duct connected.



RC-E5

E.S.P. button

External Static Pressure (E.S.P.) can be set by E.S.P. button.

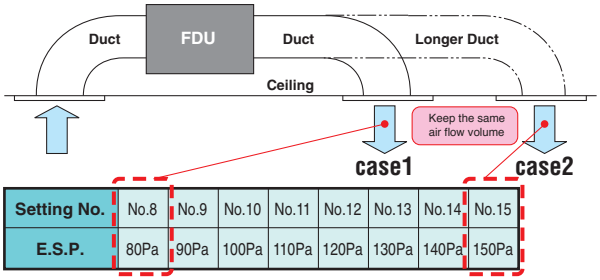

Setting No.	No.8	No.9	No.10	No.11	No.12	No.13	No.14	No.15
E.S.P.	80Pa	90Pa	100Pa	110Pa	120Pa	130Pa	140Pa	150Pa

*Range of 80~150 Pa is set at ex-factory default.
Range of 10~200 Pa is available by setting SW8-4 switch on at site.

Quiet operation:45dB(A)

Thanks to use of DC fan motor, fan steps increase from two to four and quiet operation is achieved.
(Sound pressure level 45dB(A) in the Lo mode).

Improvement of the serviceability

Fan unit (impeller and motor) can be pulled out from the right side of the unit. Maintenance can be available from the right side or the bottom side.
(Common for FDUM22~160KXE6F & FDU45~160KXE6F)

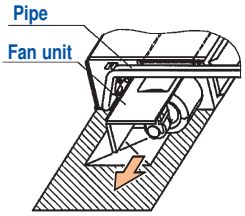

Specifications

Item		Model	FDU224KXZE1	FDU280KXZE1
Nominal cooling capacity		kW	22.4	28.0
Nominal heating capacity		kW	25.0	31.5
Power source			1 Phase 220-240V, 50Hz	
Power consumption	Cooling	kW	1.16-1.20	1.16-1.20
	Heating		1.16-1.20	1.16-1.20
Sound power level		dB(A)	75	
Sound pressure level ※		dB(A)	Hi:50 / Me:47 / Lo:45	
Exterior dimensions H x W x D		mm	379x1600x893	
Net weight		kg	89	
Air flow ※		m³/min	Hi:72 / Me:64 / Lo:56	
Maximum external static pressure		Pa	200	
Outside air intake			Possible(on return duct)	
Air filter			Procure locally	
Remote control(option)			wired:RC-EX1A, RC-E5, RCH-E3 wireless:RCN-KIT3-E	
Installation data Refrigerant piping size		mm(in)	Liquid line:ø9.52(3/8") Gas line:ø19.05(3/4")	Liquid line:ø9.52(3/8") Gas line:ø22.22(7/8")

1. The data are measured under the following conditions(ISO-T1). Cooling: Indoor temp. of 27°CDB, 19°CWB, and outdoor temp. of 35°CDB. Heating: Indoor temp. of 20°CDB, and outdoor temp. of 7°CDB, 6°CWB. External static pressure of indoor unit is 72Pa.
2. Sound pressure level indicates the value in an anechoic chamber. During operation these values are somewhat higher due to ambient conditions.
※ Powerful-Hi can be selected. Sound pressure level: FDU224/280 52dB(A). Air flow: FDU224/280 80m³/min.

Dimensions

All measurements in mm.

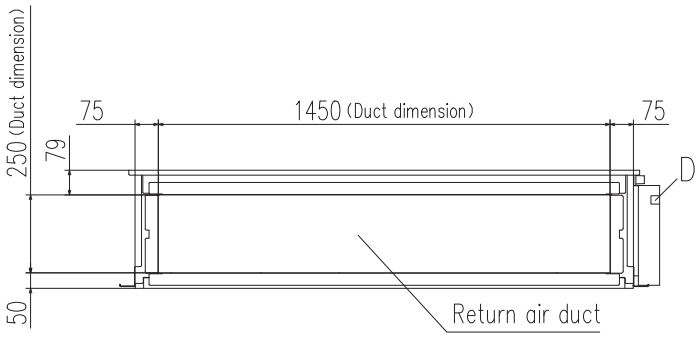

Symbol	Content		
	MODEL	224	280
A	Gas piping	ϕ19.05 (3/4") (Brazing)	ϕ22.22 (7/8") (Brazing)
B	Liquid piping	ϕ9.52 (3/8") (Brazing)	
C	Drain piping (Gravity drainage)	VP25 (O.D.32)	
D	Hole for wiring		
E	Suspension bolts	M10	
F	Inspection hole	(450X450)	

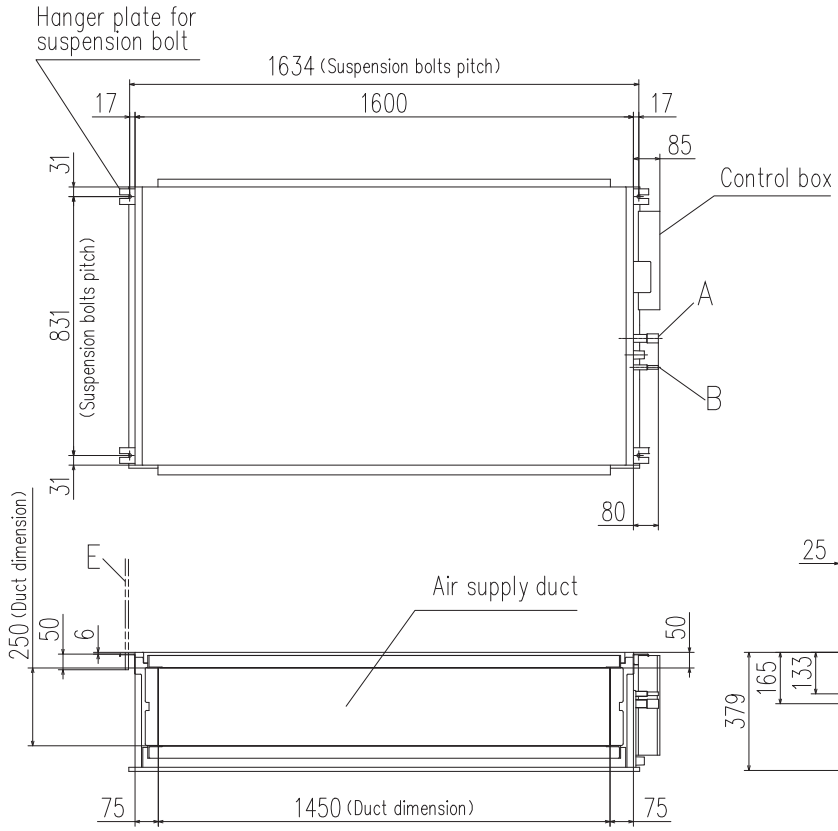

Space for installation and service

Select either of two cases to keep space for installation and services.

(Case 1) From side of unit

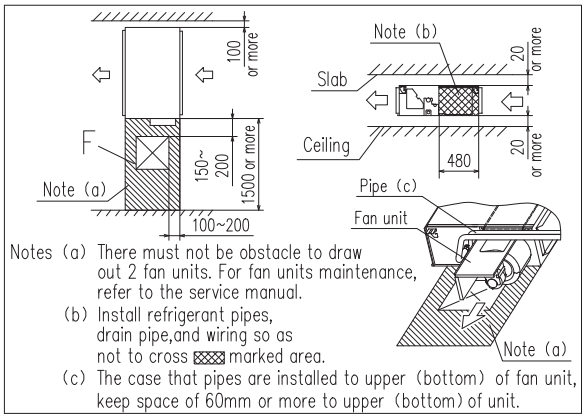

Notes (a) There must not be obstacle to draw out 2 fan units. For fan units maintenance, refer to the service manual.

(b) Install refrigerant pipes, drain pipe,and wiring so as not to cross ▨ marked area.

(c) The case that pipes are installed to upper (bottom) of fan unit, keep space of 60mm or more to upper (bottom) of unit.

(Case 2) From bottom of unit

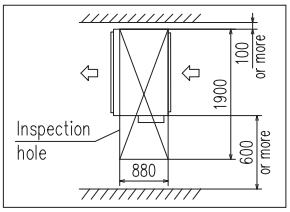

Notes (1) The model name label is attached on the lid of the control box.

Duct Connected -Low/Middle Static Pressure- FDUM

Model No.

FDUM22KXE6F	FDUM71KXE6F
FDUM28KXE6F	FDUM90KXE6F
FDUM36KXE6F	FDUM112KXE6F
FDUM45KXE6F	FDUM140KXE6F
FDUM56KXE6F	FDUM160KXE6F



Filter kit (option)
UM-FL1EF : for 22~56
UM-FL2EF : for 71, 90
UM-FL3EF : for 112, 140, 160



*Filter pressure loss:5pa

Remote control (option)
Wired



RC-EX1A **RC-E5** **RCH-E3**

Wireless



RCN-KIT3-E

Automatic external static pressure (E.S.P.) control

Duct design was simplified.
Using DC motor, the most optimum air flow volume can be achieved by this automatic control.
Indoor unit will recognize external static pressure by itself automatically and keep rated air flow volume.

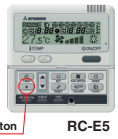

E.S.P. button RC-E5

External static pressure (E.S.P.) can be set by E.S.P. button.

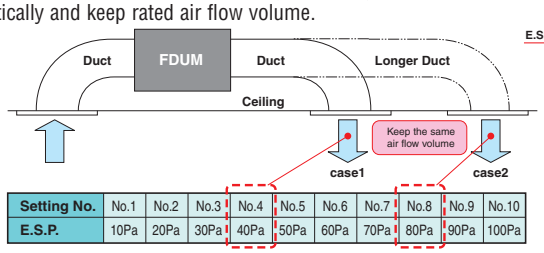

Setting No.	No.1	No.2	No.3	No.4	No.5	No.6	No.7	No.8	No.9	No.10
E.S.P.	10Pa	20Pa	30Pa	40Pa	50Pa	60Pa	70Pa	80Pa	90Pa	100Pa

Thin design

The height of all FDUM models is only 280mm.

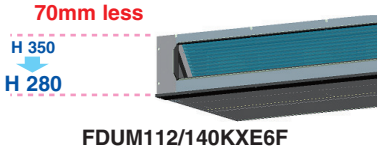

FDUM112/140KXE6F

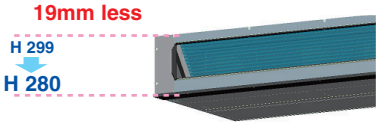

FDUM22~90KXE6F

Improvement of the serviceability

Fan unit (impeller and motor) can be pulled out from the right side or the bottom side of the unit.
Maintenance can be available from the right side or the bottom side.

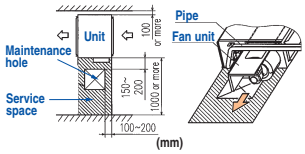

Transparent inspection window

Dirt condition of the bottom of a drain pan can be checked through this transparent inspection window without removing drain pan. (Please refer to P44)

Specifications

Item	Model	FDUM22KXE6F	FDUM28KXE6F	FDUM36KXE6F	FDUM45KXE6F	FDUM56KXE6F	FDUM71KXE6F	FDUM90KXE6F	FDUM112KXE6F	FDUM140KXE6F	FDUM160KXE6F
Nominal cooling capacity	kW	2.2	2.8	3.6	4.5	5.6	7.1	9.0	11.2	14.0	16.0
Nominal heating capacity	kW	2.5	3.2	4.0	5.0	6.3	8.0	10.0	12.5	16.0	18.0
Power source		1 Phase 220-240V, 50Hz									
Power consumption	Cooling kW	0.10-0.10					0.20-0.20		0.29-0.29	0.33-0.33	0.45-0.45
	Heating kW	0.10-0.10					0.20-0.20		0.29-0.29	0.33-0.33	0.45-0.45
Sound power level	dB(A)	60					65		—		
Sound pressure level※	dB(A)	Hi:32 Me:29 Lo:26					Hi:33 Me:29 Lo:25		Hi:38 Me:36 Lo:30	Hi:40 Me:34 Lo:29	Hi:40 Me:35 Lo:30
Exterior dimensions H x W x D	mm	280 x 750 x 635					280 x 950 x 635		280 x 1370 x 740		
Net weight	kg	29					34		54		
Air flow ※	m³/min	Hi:10 Me:9 Lo:8					Hi:19 Me:15 Lo:10		Hi:28 Me:25 Lo:19	Hi:32 Me:26 Lo:20	Hi:35 Me:28 Lo:22
Maximum external static pressure	Pa	100									
Outside air intake		Possible									
Air filter		Filter kit:UM-FL1EF/UM-FL2EF/UM-FL3EF(option)									
Remote control(option)		wired:RC-EX1A, RC-E5, RCH-E3 wireless:RCN-KIT3-E									
Installation data Refrigerant piping size	mm(in)	Liquid line:ø6.35(1/4") Gas line:ø9.52(3/8")		Liquid line:ø6.35(1/4") Gas line:ø12.7(1/2")			Liquid line:ø9.52(3/8") Gas line:ø15.88(5/8")				

1. The data are measured under the following conditions(ISO-T1). Cooling: Indoor temp. of 27°CDB, 19°CWB, and outdoor temp. of 35°CDB. Heating: Indoor temp. of 20°CDB, and outdoor temp. of 7°CDB, 6°CWB. External static pressure of indoor unit is 35Pa(22/28/36/45/56/71/90), 60Pa(112/140/160).
2. Sound pressure level indicates the value in an anechoic chamber. During operation these values are somewhat higher due to ambient conditions.

※ Powerful-Hi can be selected. Sound pressure level: FDUM22/28/36/45/56 37dB(A), FDUM71/90 38dB(A), FDUM112 44dB(A), FDUM140 45dB(A), FDUM160 47dB(A). Air flow: FDUM22/28/36/45/56 13m³/min, FDUM71/90 24m³/min, FDUM112 36m³/min, FDUM140 39m³/min, FDUM160 48m³/min.

Dimensions

All measurements in mm.

FDUM22KXE6F, 28KXE6F, 36KXE6F, 45KXE6F, 56KXE6F

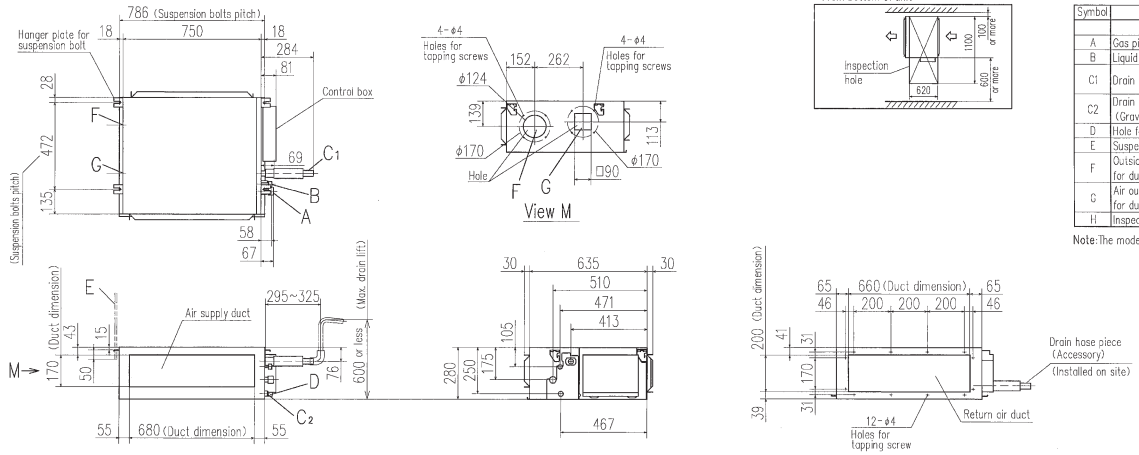

Symbol	Content		
	Model	22,28	36,45,56
A	Gas piping	φ9.52 (3/8") (Flare)	φ12.7 (1/2") (Flare)
B	Liquid piping	φ6.35 (1/4") (Flare)	
C1	Drain piping	VP25 (O.D.32)	
C2	Drain piping (Gravity drainage)	VP20	
D	Hole for wiring		
E	Suspension bolts	(M10)	
F	Outside air opening for ducting	(Knock out)	
G	Air outlet opening for ducting	(Knock out)	
H	Inspection hole	(450X450)	

Note: The model name label is attached on the lid of the control box.

FDUM71KXE6F, 90KXE6F

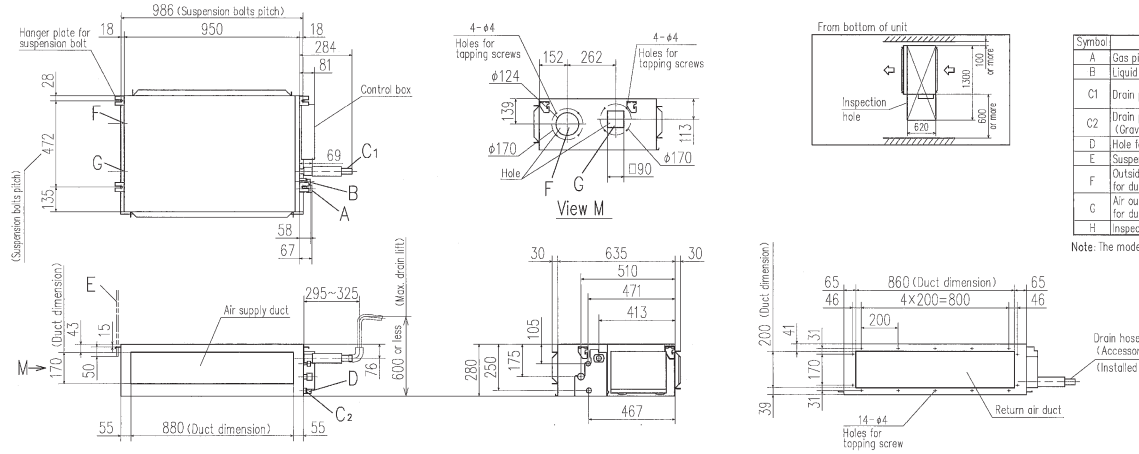

Symbol	Content	
A	Gas piping	φ15.88 (5/8") (Flare)
B	Liquid piping	φ9.52 (3/8") (Flare)
C1	Drain piping	VP25 (O.D.32)
C2	Drain piping (Gravity drainage)	VP20
D	Hole for wiring	
E	Suspension bolts	(M10)
F	Outside air opening for ducting	(Knock out)
G	Air outlet opening for ducting	(Knock out)
H	Inspection hole	(450X450)

Note: The model name label is attached on the lid of the control box.

FDUM112KXE6F, 140KXE6F, 160KXE6F

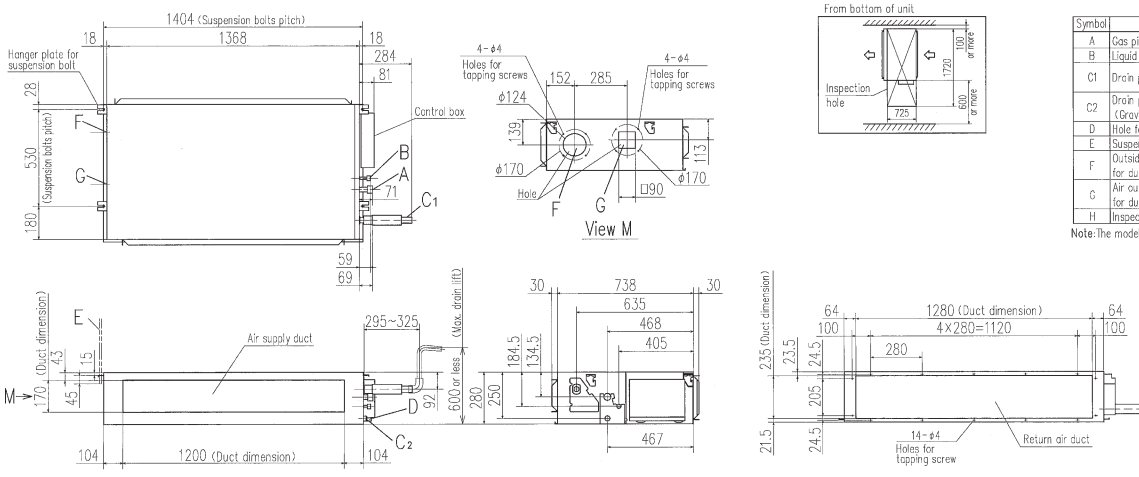

Symbol	Content	
A	Gas piping	φ15.88 (5/8") (Flare)
B	Liquid piping	φ9.52 (3/8") (Flare)
C1	Drain piping	VP25 (O.D.32)
C2	Drain piping (Gravity drainage)	VP20
D	Hole for wiring	
E	Suspension bolts	(M10)
F	Outside air opening for ducting	(Knock out)
G	Air outlet opening for ducting	(Knock out)
H	Inspection hole	(450X450)

Note: The model name label is attached on the lid of the control box.

Round duct adapter

In case of requirements of round duct adapter, please access the followings for details.

Company AIRZONE
e-mail jmoral@altracorporacion.es
tel +34-902-400-445

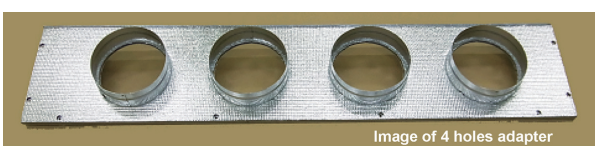
Image of 4 holes adapter

Duct Connected (thin) -Low Static Pressure- FDUT

Model No.

FDUT15KXE6F-E
FDUT22KXE6F-E
FDUT28KXE6F-E
FDUT36KXE6F-E
FDUT45KXE6F-E
FDUT56KXE6F-E
FDUT71KXE6F-E

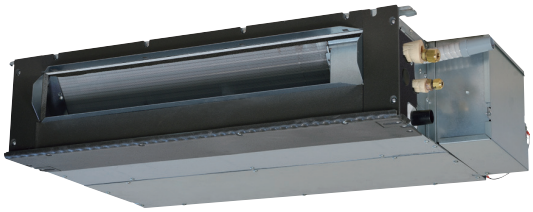

Remote control (option)

Wired



RC-EX1A RC-E5 RCH-E3

Wireless



RCN-KIT3-E

Compact design

<FDUT15~56KXE6F-E>

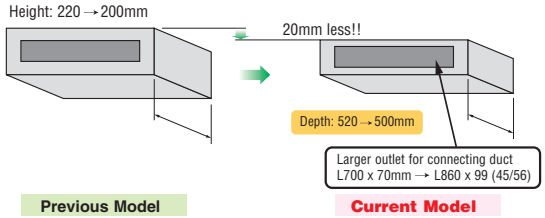

Lower noise

<FDUT28KXE6F-E>

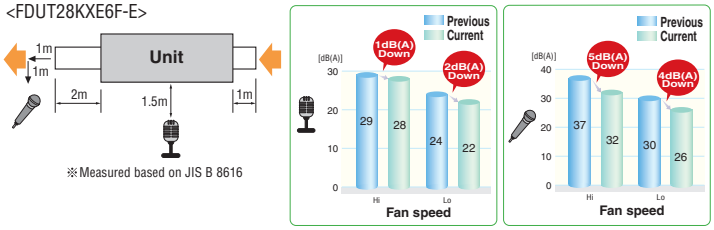

Serviceability

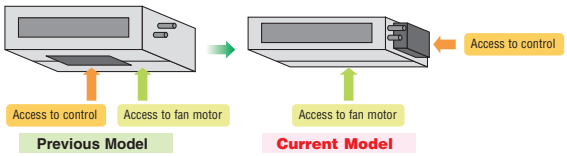

Duct kit and filter options

Item	Contents	for FDUT15/22/28/36KXE6F-E	for FDUT45/56KXE6F-E	for FDUT71KXE6F-E
Outlet duct plate	①	UT-SAT1EF	UT-SAT2EF	UT-SAT3EF
Filter set	②+③	UT-FL1EF	UT-FL2EF	UT-FL3EF

Filter pressure loss : 5 Pa

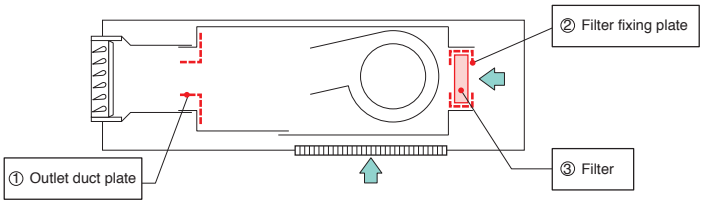

Specifications

Item		Model	FDUT15KXE6F-E	FDUT22KXE6F-E	FDUT28KXE6F-E	FDUT36KXE6F-E	FDUT45KXE6F-E	FDUT56KXE6F-E	FDUT71KXE6F-E
Nominal cooling capacity		kW	1.5	2.2	2.8	3.6	4.5	5.6	7.1
Nominal heating capacity		kW	1.7	2.5	3.2	4.0	5.0	6.0	8.0
Power source			1 Phase 220-240V, 50Hz						
Power consumption	Cooling	kW	0.06-0.06	0.07-0.07			0.08-0.08		0.08-0.08
	Heating	kW	0.06-0.06	0.07-0.07			0.08-0.08		0.07-0.07
Sound power level		dB(A)	52			57	58	59	
Sound pressure level ①		dB(A)	Hi:28 Me:26 Lo:22	Hi:28 Me:26 Lo:22		Hi:33 Me:30 Lo:26	Hi:34 Me:32 Lo:28	Hi:35 Me:33 Lo:30	Hi:35 Me:31 Lo:28
Sound pressure level ②		dB(A)	Hi:32 Me:29 Lo:25	Hi:32 Me:29 Lo:26		Hi:37 Me:34 Lo:28	Hi:36 Me:33 Lo:27	Hi:38 Me:33 Lo:29	Hi:41 Me:37 Lo:32
Exterior dimensions H x W x D		mm	200x750x500				200x950x500		220x1150x565
Net weight		kg	21			22	25		31
Air flow (Standard)		m³/min	Hi:6 Me:5 Lo:4	Hi:7.5 Me:6 Lo:5		Hi:8.5 Me:7 Lo:5.5	Hi:11.5 Me:9 Lo:7	Hi:12.5 Me:9 Lo:7.2	Hi:16 Me:13 Lo:9.5
External Static pressure		Pa	Standard:10, Max:35				Standard:10, Max:50		
Outside air intake			Possible from return duct						
Air filter			Filter set:UT-FL1EF/UT-FL2EF/UT-FL3EF(option)						
Remote control(option)			wired:RC-EX1A, RC-E5, RCH-E3 wireless:RCN-KIT3-E						
Installation data Refrigerant piping size		mm(in)	Liquid line:ø6.35(1/4") Gas line:ø9.52(3/8")			Liquid line:ø6.35(1/4") Gas line:ø12.7(1/2")			Liquid line:ø9.52(3/8") Gas line:ø15.88(5/8")

1. The data are measured under the following conditions(ISO-T1). Cooling: Indoor temp. of 27°CDB, 19°CWB, and outdoor temp. of 35°CDB. Heating: Indoor temp. of 20°CDB, and outdoor temp. of 7°CDB, 6°CWB. External static pressure of indoor unit is 10Pa.
2. The data of nominal cooling and heating capacity and sound pressure level are measured with 10Pa of external static pressure.
3. The sound level indicates the value of rear-intake type with duct in anechoic chamber. During operation these values are somewhat higher due to ambient conditions.
4. Sound pressure levels are values when 2m supply duct and 1m return duct are connected.
① : Mike position is 1.5m below unit, ② : Mike position is 1m in front and 1m below the air supply duct.

Dimensions

All measurements in mm.

FDUT15KXE6F-E, 22KXE6F-E, 28KXE6F-E, 36KXE6F-E

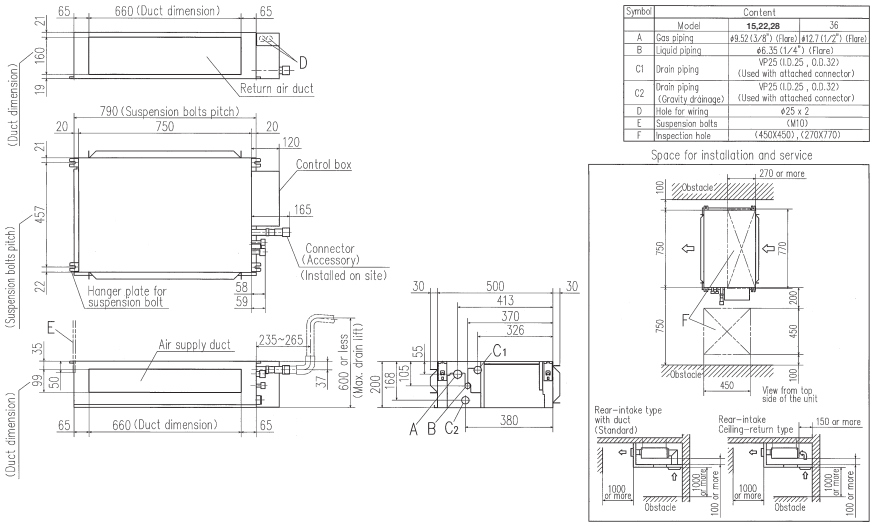

Symbol	Content	
	Model	15,22,28 / 36
A	Gas piping	ø9.52 (3/8") (Flare) / ø12.7 (1/2") (Flare)
B	Liquid piping	ø6.35 (1/4") (Flare)
C1	Drain piping	VP25 (I.D.25 , O.D.32) (Used with attached connector)
C2	Drain piping (Gravity drainage)	VP25 (I.D.25 , O.D.32) (Used with attached connector)
D	Hole for wiring	ø25 x 2
E	Suspension bolts	(M10)
F	Inspection hole	(450X450) , (270X770)

FDUT45KXE6F-E, 56KXE6F-E

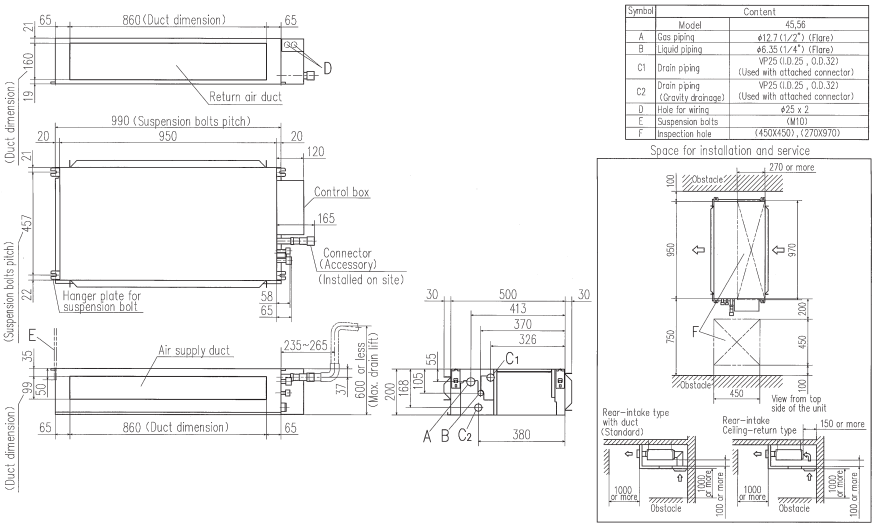

Symbol	Content	
	Model	45,56
A	Gas piping	ø12.7 (1/2") (Flare)
B	Liquid piping	ø6.35 (1/4") (Flare)
C1	Drain piping	VP25 (I.D.25 , O.D.32) (Used with attached connector)
C2	Drain piping (Gravity drainage)	VP25 (I.D.25 , O.D.32) (Used with attached connector)
D	Hole for wiring	ø25 x 2
E	Suspension bolts	(M10)
F	Inspection hole	(450X450) , (270X970)

FDUT71KXE6F-E

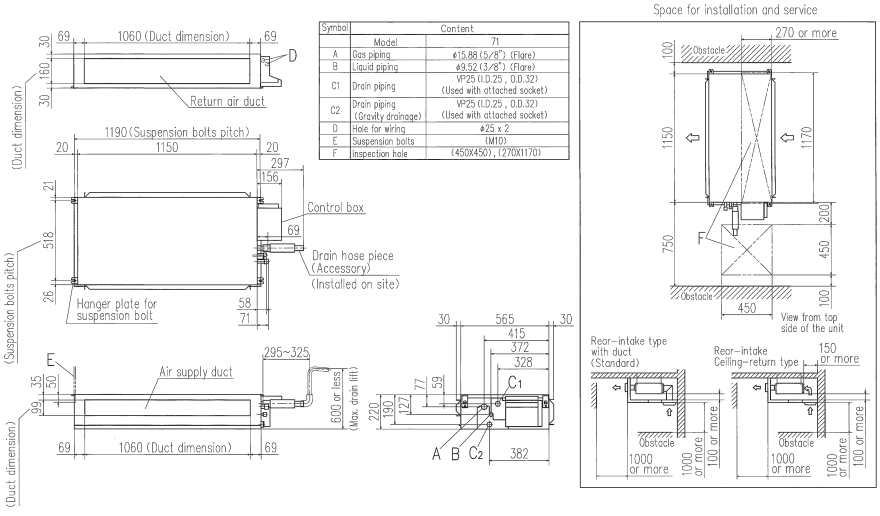

Symbol	Content	
	Model	71
A	Gas piping	ø15.88 (5/8") (Flare)
B	Liquid piping	ø9.52 (3/8") (Flare)
C1	Drain piping	VP25 (I.D.25 , O.D.32) (Used with attached socket)
C2	Drain piping (Gravity drainage)	VP25 (I.D.25 , O.D.32) (Used with attached socket)
D	Hole for wiring	ø25 x 2
E	Suspension bolts	(M10)
F	Inspection hole	(450X450) , (270X1170)

Duct Connected (Compact & Flexible)
FDUH

Model No.
FDUH22KXE6F
FDUH28KXE6F
FDUH36KXE6F



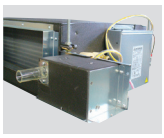

Drain up kit (option)
(600mm)
UH-DU-E

Filter kit (option)
UH-FL1E



∗Filter pressure loss:5pa

Remote control (option)

Wired



RC-EX1A **RC-E5** **RCH-E3**

Wireless



RCN-KIT3-E

Compact and thin size, light weight

Our leading high technology has realized the best solution for air conditioning in hotels with compact and thin size units and high energy efficiency. In addition, weight is only 20kg.

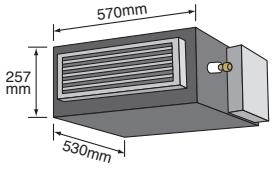

Quiet operation

The lowest sound level in the industry can ensure comfortable stay and rest in hotels.

Installation Flexibility

Control box and drain piping can be installed on both side of the unit and air intake to the unit is available from bottom or back side. Our highest technology can satisfy diverse installation requirements.

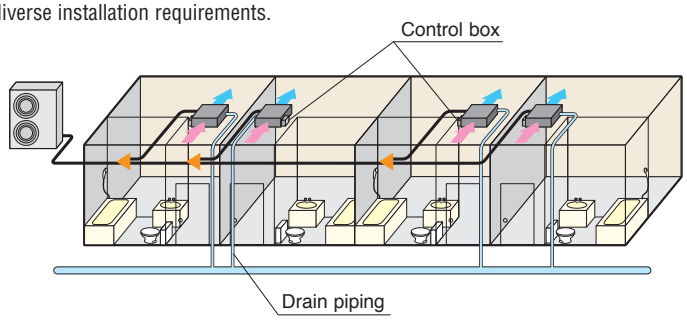

Wired remote control



RCH-E3
(option)

Simple remote control

Considering specialized usage in hotel rooms, control buttons are limited only to minimum required functions such as ON/OFF, mode, temperature setting and fan speed. It is really simple and easy to use.

Specifications

Item		Model	FDUH22KXE6F	FDUH28KXE6F	FDUH36KXE6F
Nominal cooling capacity		kW	2.2	2.8	3.6
Nominal heating capacity		kW	2.5	3.2	4.0
Power source			1 Phase 220-240V, 50Hz		
Power consumption	Cooling	kW	0.05-0.07		
	Heating		0.05-0.07		
Sound power level		dB(A)	60		
Sound pressure level ※		dB(A)	Hi: 33 Me: 30 Lo: 27		
Exterior dimensions HxWxD		mm	257x570x530		
Net weight		kg	22		
Air flow ※		m³/min	Hi: 7 Me: 6.5 Lo: 6		
External static pressure		Pa	30		
Outside air intake			Possible from return duct		
Air filter			Filter kit:UH-FL1E(option)		
Remote control(option)			wired:RC-EX1A, RC-E5, RCH-E3 wireless:RCN-KIT3-E		
Installation data Refrigerant piping size		mm(in)	Liquid line:ø6.35(1/4")		Liquid line:ø6.35(1/4")
			Gas line:ø9.52(3/8")		Gas line:ø12.7(1/2")

1. The data are measured under the following conditions(ISO-T1). Cooling: Indoor temp. of 27ºCDB, 19ºCWB, and outdoor temp. of 35ºCDB. Heating: Indoor temp. of 20ºCDB, and outdoor temp. of 7ºCDB, 6ºCWB.
2. Sound pressure level indicates the value in an anechoic chamber. During operation these values are somewhat higher due to ambient conditions.

※ Powerful-Hi can be selected. Sound pressure level: FDUH22/28/36 39dB(A). Air flow: FDUH22/28/36 8.5m³/min.

Dimensions

All measurements in mm.

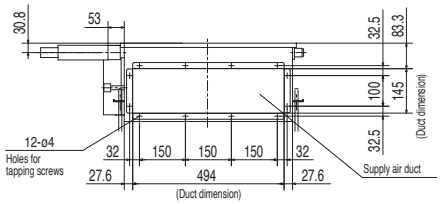

Symbol	Content		
	Model	FDUH22KXE6F,28KXE6F	FDUH36KXE6F
A	Gas piping	ø9.52 (3/8") (Flare)	ø12.7 (1/2") (Flare)
B	Liquid piping	ø6.35 (1/4") (Flare)	
C_1,C_2	Drain piping	VP20(I.D.20, O.D.26) Note (2)	
D	Hole for wiring	ø30	
E	Suspension bolts	(M10)	
F	Inspection hole	(635X890) Note (3)	

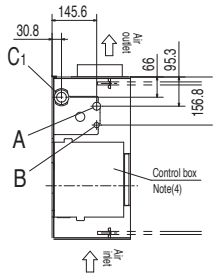

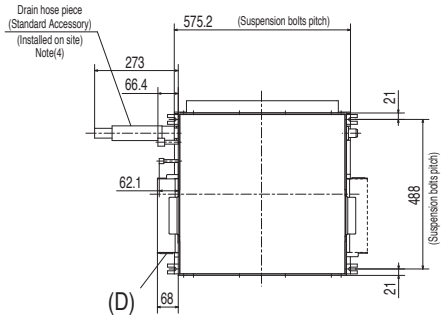

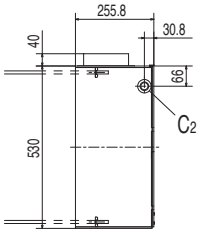

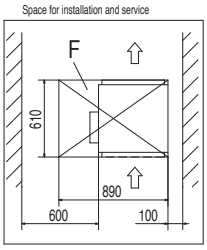

Unit:mm

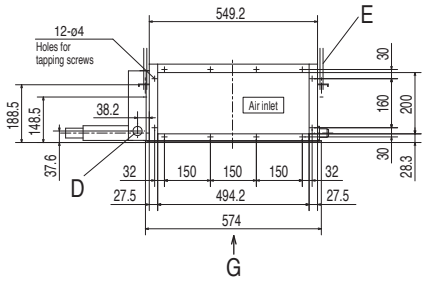

Notes

(1) The model name label is attached on the fan case inside the air return grille.
(2) Prepare the connecting socket (VP20) on site. (As for drain piping, it is possible to choose C_1 or C_2)
(3) When control box is located on the reverse side, Installation space should be modified to new location.
(4) Control box and Drain hose piece are able to be relocated on the reverse side.

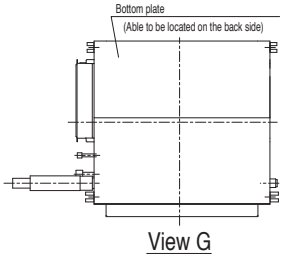

In case of Bottom air intake

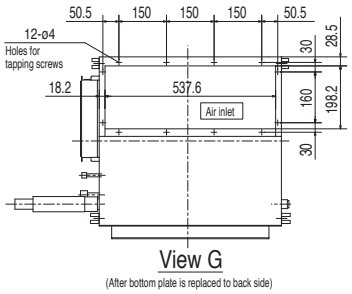

Simple remote control

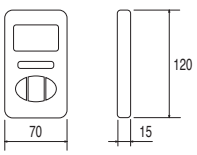

Wall Mounted FDK

Model No.

FDK22KXE6F
FDK28KXE6F
FDK36KXE6F
FDK45KXE6F
FDK56KXE6F
FDK71KXE6F



FDK22~56



FDK71

Remote control (option)

Wired



RC-EX1A RC-E5 RCH-E3

Wireless



RCN-K-E : FDK22~56
RCN-K71-E : FDK71

Innovative Design

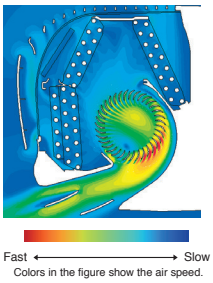

Fast ⟵ ⟶ Slow
Colors in the figure show the air speed.

New FDK models adopt the air flow design that's proven to minimise resistance in a CFD analysis to achieve uniform air conditioning to the furthest corners of the room.

Installation Workability

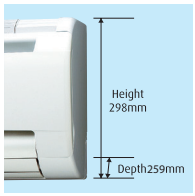

The new slimmer design allows easy & neat installation even in tight spaces.

Improved Maintainability

Also included is a new easy clean mechanism where the front panel is opened/closed simply from the bottom to easily access the detachable filters.

Flap control system

Selection of flap position is possible. A flap can be set at different angles.

*RCH-E3 is not applicable to the flap control system.

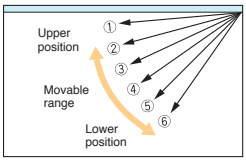

Specifications

Item		Model	FDK22KXE6F	FDK28KXE6F	FDK36KXE6F	FDK45KXE6F	FDK56KXE6F	FDK71KXE6F
Nominal cooling capacity		kW	2.2	2.8	3.6	4.5	5.6	7.1
Nominal heating capacity		kW	2.5	3.2	4.0	5.0	6.3	8.0
Power source			1 Phase 220-240V, 50Hz					
Power consumption	Cooling	kW	0.05-0.05			0.05-0.05		0.09-0.09
	Heating		0.04-0.04			0.05-0.05		0.09-0.09
Sound power level		dB(A)	57		60			
Sound pressure level ※	Cooling	dB(A)	Hi:35 Me:33 Lo:31		Hi:41 Me:35 Lo:31	Hi:42 Me:37 Lo:33	Hi:46 Me:42 Lo:37	Hi:47 Me:43 Lo:39
	Heating		Hi:35 Me:33 Lo:31		Hi:39 Me:35 Lo:31	Hi:42 Me:37 Lo:33	Hi:46 Me:42 Lo:37	Hi:47 Me:43 Lo:39
Exterior dimensions H x W x D		mm	298 x 840 x 259					318 x 1098 x 248
Net weight		kg	12			12.5	13	15.5
Air flow ※		m³/min	Hi:8 Me:7 Lo:6		Hi:10 Me:9 Lo:7	Hi:11 Me:9 Lo:7	Hi:14 Me:12 Lo:10	Hi:21 Me:18 Lo:15
Outside air intake			Not possible					
Air filter, Q'ty			Polypropylene net x2 (Washable)					
Remote control(option)			wired:RC-EX1A, RC-E5, RCH-E3 wireless:RCN-K-E (for FDK22~56), RCN-K71-E (for FDK71)					
Installation data Refrigerant piping size		mm(in)	Liquid line:ø6.35(1/4") Gas line:ø9.52(3/8")		Liquid line:ø6.35(1/4") Gas line:ø12.7(1/2")			Liquid line:ø9.52(3/8") Gas line:ø15.88(5/8")

1. The data are measured under the following conditions(ISO-T1). Cooling: Indoor temp. of 27°CDB, 19°CWB, and outdoor temp. of 35°CDB. Heating: Indoor temp. of 20°CDB, and outdoor temp. of 7°CDB, 6°CWB.
2. Sound pressure level indicates the value in an anechoic chamber. During operation these values are somewhat higher due to ambient conditions.

※ Powerful-Hi can be selected. Sound pressure level: FDK22/28 38dB(A), FDK36 48dB(A)(Cooling)&42dB(A)(Heating), FDK45 48dB(A)(Cooling)&43dB(A)(Heating), FDK56 48dB(A)(Cooling)&47dB(A)(Heating), FDK71 48dB(A).
Air flow: FDK22/28 11m³/min, FDK36/45 15m³/min, FDK56 16m³/min, FDK71 24m³/min.

Dimensions

All measurements in mm.

FDK22KXE6F, 28KXE6F, 36KXE6F, 45KXE6F, 56KXE6F

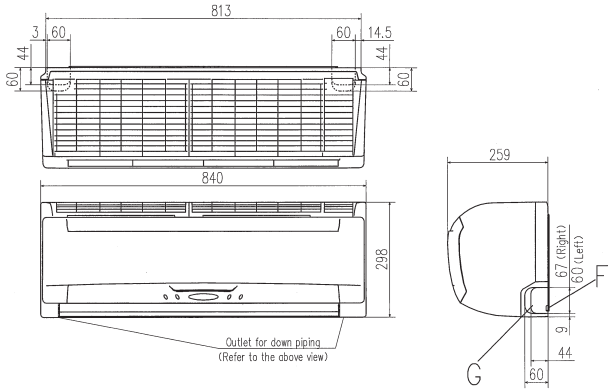

Note (1) The model name label is attached on the underside of the panel.

Symbol	Content		
	Model	FDK22KXE6F, 28KXE6F	FDK36KXE6F, 45KXE6F, 56KXE6F
A	Gas piping	ø9.52 (3/8") (Flare)	ø12.7 (1/2") (Flare)
B	Liquid piping	ø6.35 (1/4") (Flare)	
C	Hole on wall for right rear piping	(ø65)	
D	Hole on wall for left rear piping	(ø65)	
E	Drain piping	VP16 (I.D.16)	
F	Outlet for wiring		
G	Outlet for piping (on both side)		

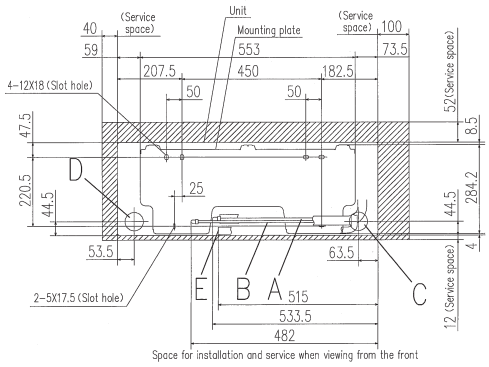

Space for installation and service when viewing from the front

FDK71KXE6F

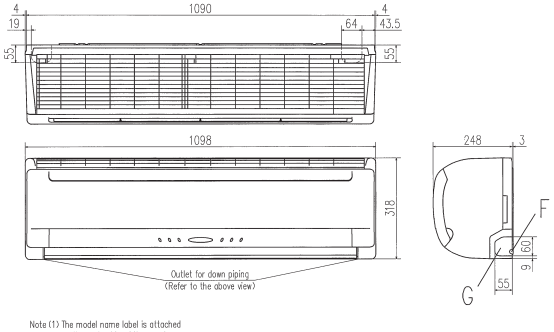

Note (1) The model name label is attached on the underside of the panel.

Symbol	Content	
A	Gas piping	ø15.88 (5/8") (Flare)
B	Liquid piping	ø9.52 (3/8") (Flare)
C	Hole on wall for right rear piping	(ø65)
D	Hole on wall for left rear piping	(ø65)
E	Drain piping	VP16 (I.D.16)
F	Outlet for wiring	
G	Outlet for piping (on both side)	

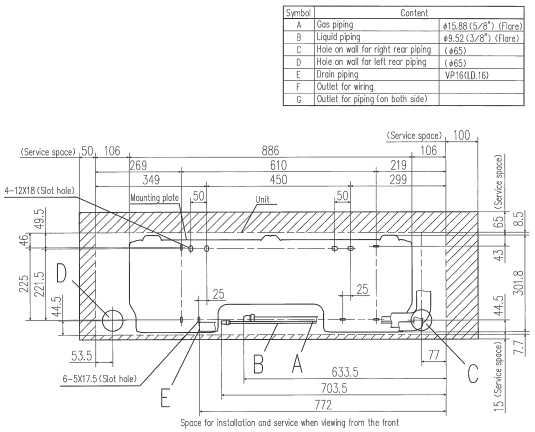

Space for installation and service when viewing from the front

Ceiling Suspended
FDE

Model No.

FDE36KXE6F
FDE45KXE6F
FDE56KXE6F
FDE71KXE6F
FDE112KXE6F
FDE140KXE6F

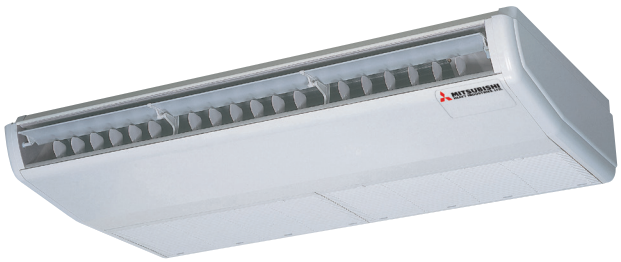

Remote control (option)

Wired



RC-EX1A RC-E5 RCH-E3

Wireless



RCN-E-E

Flap control system

Selection of flap position is possible. A flap can be set at different angles.

*RCH-E3 is not applicable to the flap control system.

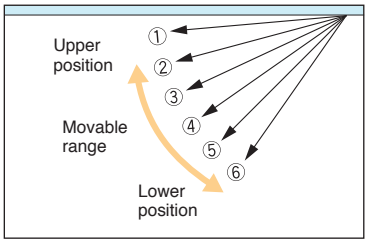

New Slim Design

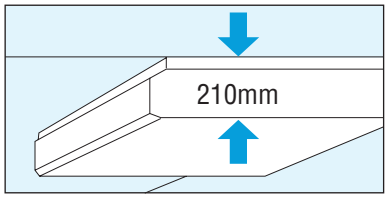

Slim and sleek design starting at just 28kgs in weight means quick, easy & neat installation.

Installation Workability

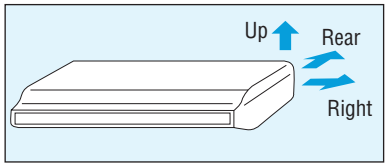

Refrigerant piping can be routed in three directions (rear, up, right) & drain piping in left or right directions, allowing free layout to meet installation conditions.

Specifications

Item		Model	FDE36KXE6F	FDE45KXE6F	FDE56KXE6F	FDE71KXE6F	FDE112KXE6F	FDE140KXE6F
Nominal cooling capacity		kW	3.6	4.5	5.6	7.1	11.2	14.0
Nominal heating capacity		kW	4.0	5.0	6.3	8.0	12.5	16.0
Power source			1 Phase 220-240V, 50Hz					
Power consumption	Cooling	kW	0.05-0.06			0.10-0.11	0.14-0.16	0.16-0.18
	Heating		0.05-0.06			0.09-0.10	0.13-0.15	0.15-0.17
Sound power level		dB(A)	60			62	—	
Sound pressure level ※		dB(A)	Hi:39 Me:38 Lo:36			Hi:41 Me:39 Lo:37	Hi:44 Me:41 Lo:39	Hi:46 Me:44 Lo:43
Exterior dimensions H x W x D		mm	210 x 1070 x 690			210 x 1320 x 690	250 x 1620 x 690	
Net weight		kg	28			37	49	
Air flow ※		m³/min	Hi:10 Me:9 Lo:7			Hi:16 Me:14 Lo:12	Hi:26 Me:23 Lo:21	Hi:29 Me:26 Lo:23
Outside air intake			Not possible					
Air filter, Q'ty			Pocket Plastic net x2 (Washable)					
Remote control(option)			wired:RC-EX1A, RC-E5, RCH-E3 wireless:RCN-E-E					
Installation data Refrigerant piping size		mm(in)	Liquid line:ø6.35(1/4") Gas line:ø12.7(1/2")			Liquid line:ø9.52(3/8") Gas line:ø15.88(5/8")		

1. The data are measured under the following conditions(ISO-T1). Cooling: Indoor temp. of 27ºCDB, 19ºCWB, and outdoor temp. of 35ºCDB. Heating: Indoor temp. of 20ºCDB, and outdoor temp. of 7ºCDB, 6ºCWB.
2. Sound pressure level indicates the value in an anechoic chamber. During operation these values are somewhat higher due to ambient conditions.

※ Powerful-Hi can be selected. Sound pressure level: FDE36/45/56 46dB(A), FDE71 50dB(A), FDE112 46dB(A), FDE140 50dB(A). Air flow: FDE36/45/56 11m³/min, FDE71 18m³/min, FDE112 28m³/min, FDE140 32m³/min.

Dimensions

All measurements in mm.

FDE36KXE6F, 45KXE6F, 56KXE6F

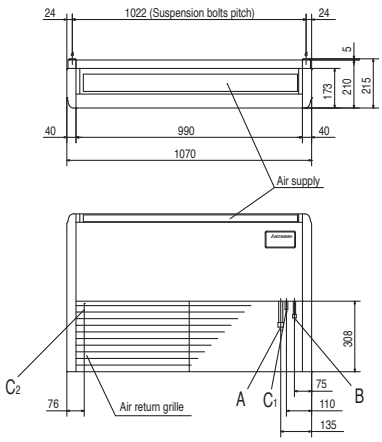

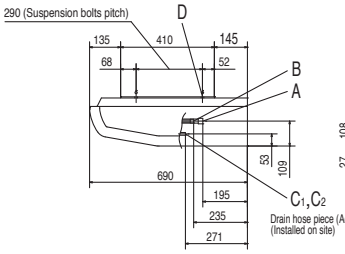

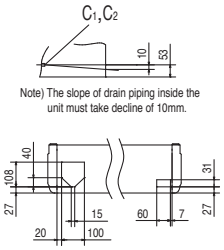

Note) The slope of drain piping inside the unit must take decline of 10mm.

Symbol	Content	
A	Gas piping	ø12.7 (1/2") (Flare)
B	Liquid piping	ø6.35 (1/4") (Flare)
C 1,2	Drain piping	VP20 (I.D.20)
D	Hole for suspension bolt	(M10 or M8)
E	Back cutout	PE cover
F	Top cutout	Plate cover
G	Hole for drain piping (for left back)	(Knock out)

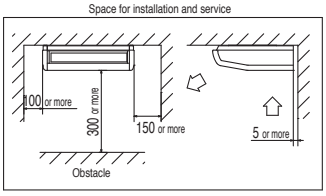

Make a space of 4000 or more between the units when installing more than one.

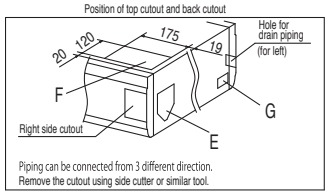

Note(1)The model name label is attached on the fan casing inside the air return grille.

FDE71KXE6F

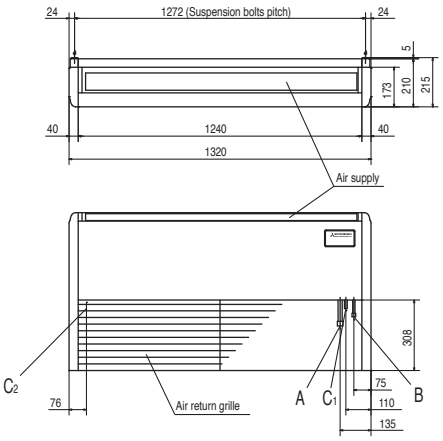

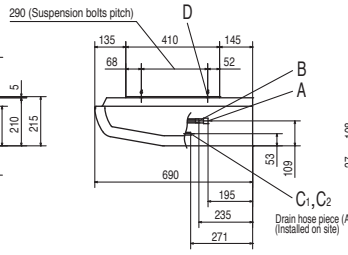

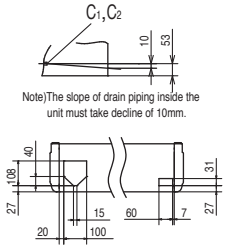

Note)The slope of drain piping inside the unit must take decline of 10mm.

Symbol	Content	
A	Gas piping	ø15.88 (5/8") (Flare)
B	Liquid piping	ø9.52 (3/8") (Flare)
C 1,2	Drain piping	VP20 (I.D.20)
D	Hole for suspension bolt	(M10 or M8)
E	Back cutout	PE cover
F	Top cutout	Plate cover
G	Hole for drain piping(for left back)	(Knock out)

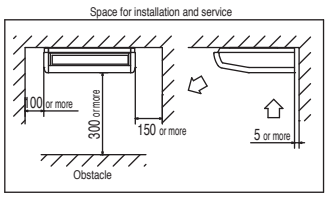

Make a space of 4500 or more between the units when installing more than one.

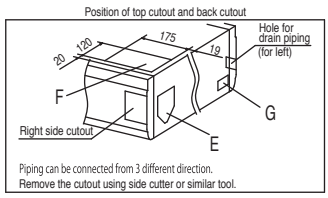

Note(1)The model name label is attached on the fan casing inside the air return grille.

FDE112KXE6F, 140KXE6F

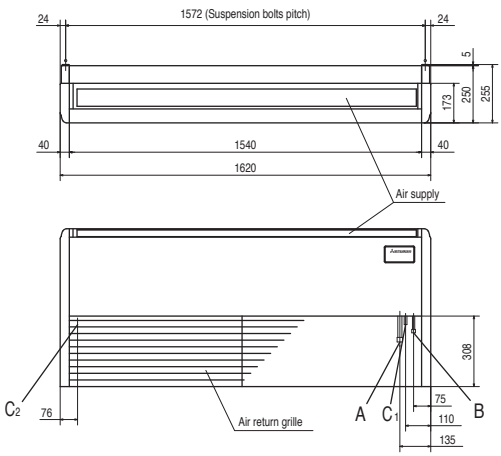

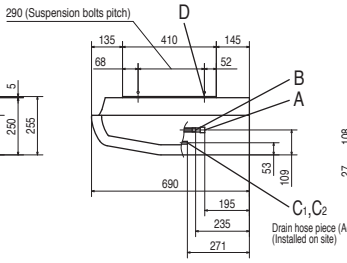

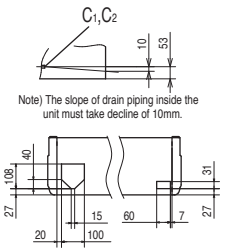

Note) The slope of drain piping inside the unit must take decline of 10mm.

Symbol	Content	
A	Gas piping	ø15.88 (5/8") (Flare)
B	Liquid piping	ø9.52 (3/8") (Flare)
C 1,2	Drain piping	VP20 (I.D.20)
D	Hole for suspension bolt	(M10 or M8)
E	Back cutout	PE cover
F	Top cutout	Plate cover
G	Hole for drain piping (for left back)	(Knock out)

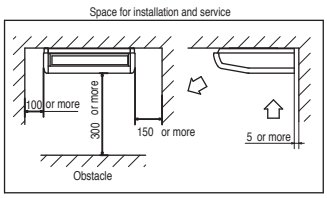

Make a space of 5000 or more between the units when installing more than one.

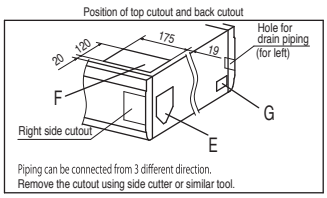

Note(1)The model name label is attached on the fan casing inside the air return grille.

Floor Standing -2way-
FDFW

Model No.

FDFW28KXE6F
FDFW45KXE6F
FDFW56KXE6F





Remote control (option)

Wired



RC-EX1A RC-E5 RCH-E3

Wireless

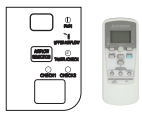

RCN-FW-E

Sophisticated Design

With classy semi flat front panel in chic white, the new series fit in various kinds of rooms and create relaxing atmosphere. Choice of wall hanging, floor standing or behind gallery installation is available.

Quiet Operation

Thanks to optimum balance of air outlet direction and sufficient air flow volume, the sound level has been minimized. The level of FDFW28KXE6F in the cooling lo mode is 30dB(A) only.

Flap control system

Selection of flap position is possible. A flap can be set at different angles.

*RCH-E3 is not applicable to the flap control system.

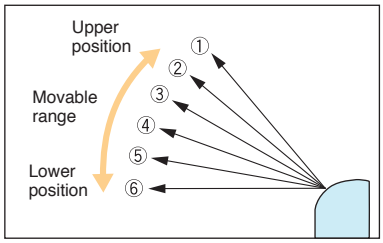

Convenient to use operation

Simultaneous lower and upper air outlets or upper outlet can be selected by air flow direction button. Further control can be arranged by a remote control.

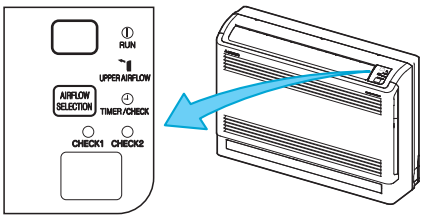

(In case of use of wireless remote control)

Specifications

Item		Model	FDFW28KXE6F	FDFW45KXE6F	FDFW56KXE6F
Nominal cooling capacity		kW	2.8	4.5	5.6
Nominal heating capacity		kW	3.2	5.0	6.3
Power source			1 Phase 220-240V, 50Hz		
Power consumption	Cooling	kW	0.02-0.02	0.02-0.02	0.03-0.03
	Heating		0.02-0.02	0.02-0.02	0.03-0.03
Sound power level		dB(A)	55	57	60
Sound pressure level		dB(A)	Hi:36 Me:34 Lo:30	Hi:38 Me:36 Lo:33	Hi:44 Me:37 Lo:33
Exterior dimensions H x W x D		mm	600x860x238		
Net weight		kg	19	20	
Air flow (Standard)		m³/min	Hi:9 Me:8 Lo:7		Hi:11 Me:9 Lo:8
Air filter, Q'ty			Polypropylene net x1 (Washable)		
Remote control(option)			wired:RC-EX1A, RC-E5, RCH-E3 wireless:RCN-FW-E		
Installation data Refrigerant piping size		mm(in)	Liquid line:ø6.35(1/4") Gas line:ø9.52(3/8")	Liquid line:ø6.35(1/4") Gas line:ø12.7(1/2")	

1. The data are measured under the following conditions(ISO-T1). Cooling: Indoor temp. of 27°CDB, 19°CWB, and outdoor temp. of 35°CDB. Heating: Indoor temp. of 20°CDB, and outdoor temp. of 7°CDB, 6°CWB.
2. Sound pressure level indicates the value in an anechoic chamber. During operation these values are somewhat higher due to ambient conditions.

Dimensions

All measurements in mm.

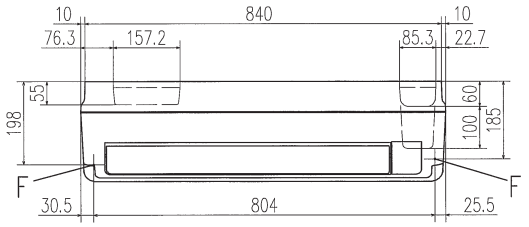

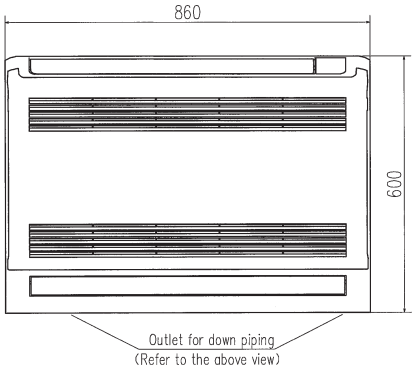

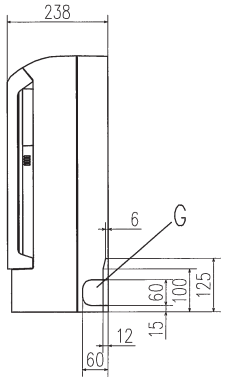

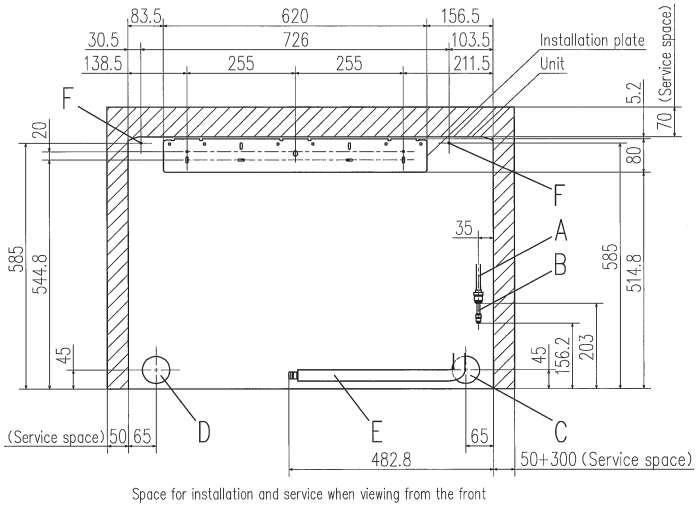

Space for installation and service when viewing from the front

Symbol	Content		
	Model	FDFW28KXE6F	FDFW45KXE6F,56KXE6F
A	Gas piping	ϕ9.52 (3/8") (Flare)	ϕ12.7 (1/2") (Flare)
B	Liquid piping	ϕ6.35 (1/4") (Flare)	
C	Hole on wall for right rear piping	(ϕ65)	
D	Hole on wall for left rear piping	(ϕ65)	
E	Drain hose	VP16 (I.D.16)	
F	Screw point fasten the indoor unit	ϕ5	
G	Outlet for piping (on both side)		

Notes
(1) The model name label is attached on the rightside of the unit.
(2) In case of wall installation, leave the unit 150mm or less from the floor.

Floor Standing (with casing)
FDFL
Floor Standing (without casing)
FDFU

Remote control (option)

Wired



RC-EX1A



RC-E5



RCH-E3

Wireless





RCN-KIT3-E

Model No.

FDFL71KXE6F

FDFU28KXE6F
FDFU45KXE6F
FDFU56KXE6F
FDFU71KXE6F



FDFL

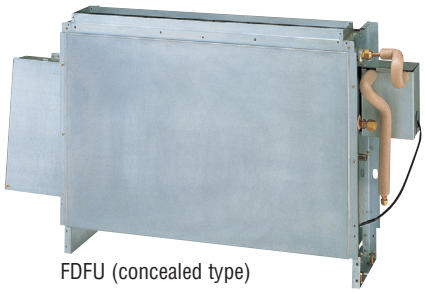

FDFU (concealed type)



Compact design at 630mm height

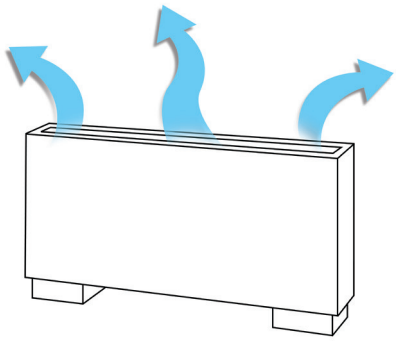

Wider airflow for optimum comfort

Specifications

Item		Model	FDFL71KXE6F	FDFU28KXE6F	FDFU45KXE6F	FDFU56KXE6F	FDFU71KXE6F
Nominal cooling capacity		kW	7.1	2.8	4.5	5.6	7.1
Nominal heating capacity		kW	8.0	3.2	5.0	6.3	8.0
Power source			1 Phase 220-240V, 50Hz				
Power consumption	Cooling	kW	0.09-0.10	0.09-0.10			
	Heating		0.09-0.10	0.09-0.10			
Sound power level		dB(A)	62	58	60		
Sound pressure level		dB(A)	Hi:43 Me:41 Lo:40	Hi:41 Me:38 Lo:36	Hi:43 Me:41 Lo:40		
Exterior dimensions H x W x D		mm	630x1481x225	630x1077x225			630x1362x225
Net weight		kg	40	25			32
Air flow (Standard)		m3/min	Hi:18 Me:15 Lo:12	Hi:12 Me:11 Lo:10	Hi:14 Me:12 Lo:10		Hi:18 Me:15 Lo:12
Air filter, Q'ty			Polypropylene net x1 (Washable)				
Remote control(option)			wired:RC-EX1A, RC-E5, RCH-E3 wireless:RCN-KIT3-E				
Installation data Refrigerant piping size		mm(in)	Liquid line:ø9.52(3/8") Gas line:ø15.88(5/8")	Liquid line:ø6.35(1/4") Gas line:ø9.52(3/8")	Liquid line:ø6.35(1/4") Gas line:ø12.7(1/2")		Liquid line:ø9.52(3/8") Gas line:ø15.88(5/8")

1. The data are measured under the following conditions(ISO-T1). Cooling: Indoor temp. of 27ºCDB, 19ºCWB, and outdoor temp. of 35ºCDB. Heating: Indoor temp. of 20ºCDB, and outdoor temp. of 7ºCDB, 6ºCWB.
2. Sound pressure level indicates the value in an anechoic chamber. During operation these values are somewhat higher due to ambient conditions.

Dimensions

All measurements in mm.

FDFL

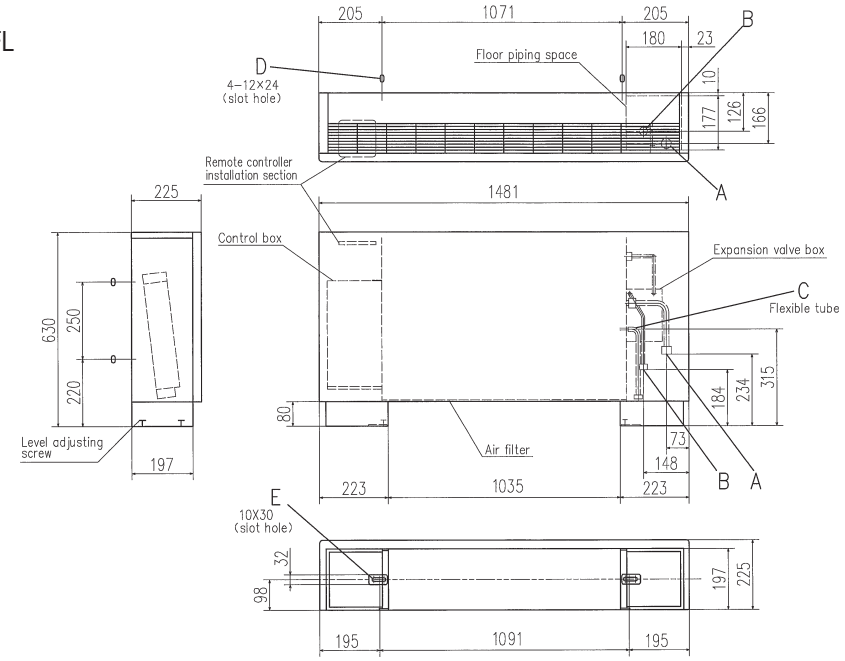

Symbol	Content	
	Model	FDFL71KXE6F
A	Gas piping (Accessory)	ϕ15.88 (5/8") (Flare)
B	Liquid piping	ϕ9.52 (3/8") (Flare)
C	Drain piping (Accessory)	PT20A female screw, 360mm
D	Slot hole for wall mounting	(M10)
E	Metal plate for floor mounting (Accessory)	(M8)

Note (1) The model name label is attached on the lid of the control box.

Space for installation and service

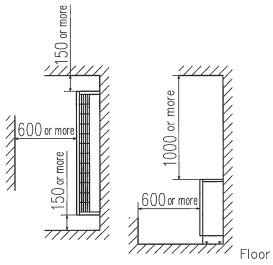

FDFU

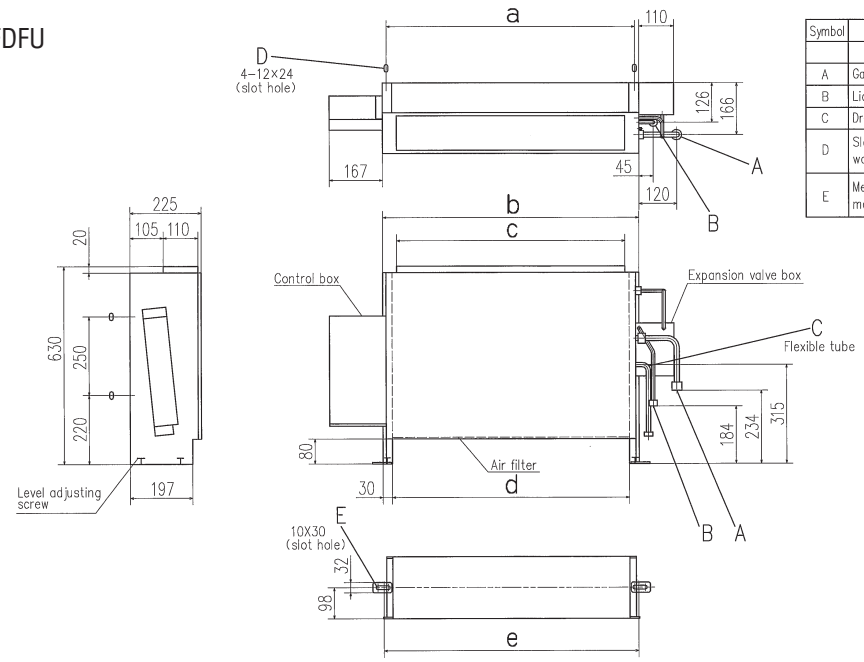

Symbol	Content		
	Model	FDFU28KXE6F	FDFU45KXE6F,56KXE6F	FDFU71KXE6F
A	Gas piping (Accessory)	ϕ9.52(3/8")(Flare)	ϕ12.7 (1/2")(Flare)	ϕ15.88 (5/8")(Flare)
B	Liquid piping	ϕ6.35 (1/4")(Flare)		ϕ9.52 (3/8")(Flare)
C	Drain piping (Accessory)	PT20A female screw, 360mm		PT20A female screw, 360mm
D	Slot hole for wall mounting	(M10)		(M10)
E	Metal plate for floor mounting (Accessory)	(M8)		(M8)

Note (1) The model name label is attached on the lid of the control box.

Space for installation and service

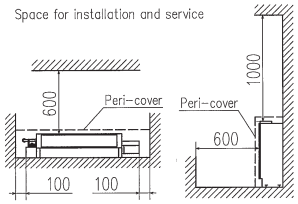

Dimension Table

Unit:mm

model	a	b	c	d	e
FDFU28KXE6F, 45KXE6F, 56KXE6F	786	810	722	750	806
FDFU71KXE6F	1071	1095	1007	1035	1091

Outdoor Air Processing unit
FDU-F

Model No.
FDU650FKXZE1
FDU1100FKXZE1
FDU1800FKXZE1
FDU2400FKXZE1

NEW



Remote control (option)

Wired



RC-EX1A RC-E5 RCH-E3

Wireless



RCN-KIT3-E

Air conditioning and intake of outdoor air are in the same system

Outdoor Air processing unit can be connected in a KXZ system as one of indoor unit series and can create fresh and comfortable air supply together from our high advanced technology.

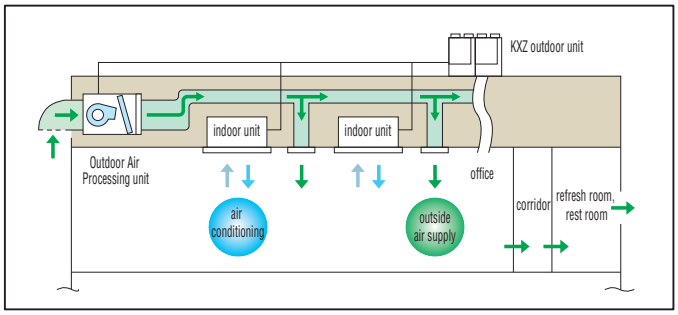

Compact design

Compact design at just 280(650, 1100), 379(1800, 2400)mm in height, high static pressure of 200Pa and the industry's lowest noise level can meet various kind of installation location for office, refresh room, restroom and kitchen of restaurant etc.

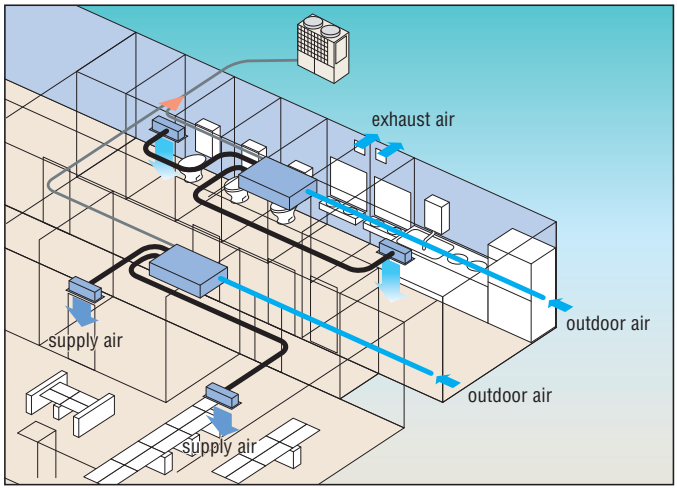

(1) This unit is the specific unit for processing the outdoor air temperature closer to the room temperature. For conditioning the room temperature a dedicated air-conditioner is required additionally.
(2) This unit monitors the outdoor air temperature and controls thermostat ON/OFF at the setting temperature by the remote controller, which indicates the outdoor air temperature for controlling thermostat ON/OFF. When thermostat is turned OFF, the operation is changed to the fan mode so that unprocessed outdoor air will be blown into the room directly. Therefore place the air outlet port or orient the air outlet direction not to blow air directly to persons in the room, especially in the small room such as a restroom and/or sanitary hot water supplying room.
(3) It is strictly prohibited to monitor the room temperature by switching to the thermistor at remote controller side and/or the optional remote thermistor. Otherwise dew formation at air outlet port and/or dew dripping may occur during cooling operation due to the lower outdoor air temperature. Therefore keep the remote controller of this unit in place closer to the administrator so as not to be touched it freely by the end user.
(4) Dehumidifying operation with this unit is prohibited.
(5) When handing over this unit to the end user, make sure to explain sufficiently about the foregoing cautions, the installation place and usage of remote control for this unit and the location of the air outlet.

Connectivity with Outdoor units

FDU-F series are connectable to 8~60HP outdoor units, not connectable to 4~6HP, KXZ Lite.

Combination with Outdoor units

	case	Combination
A	In case OA processing units only are connected with outdoor units.	The total capacity of FDU-F is 50~100% of outdoor capacity and max quantity of FDU-F is 2 units.
B	In case both of OA processing units and dedicated air-conditioner are connected with outdoor units.	The total capacity of FDU-F and dedicated air-conditioners is 50~100% of outdoor capacity and max quantity of FDU-F should be below 30% of outdoor unit capacity.

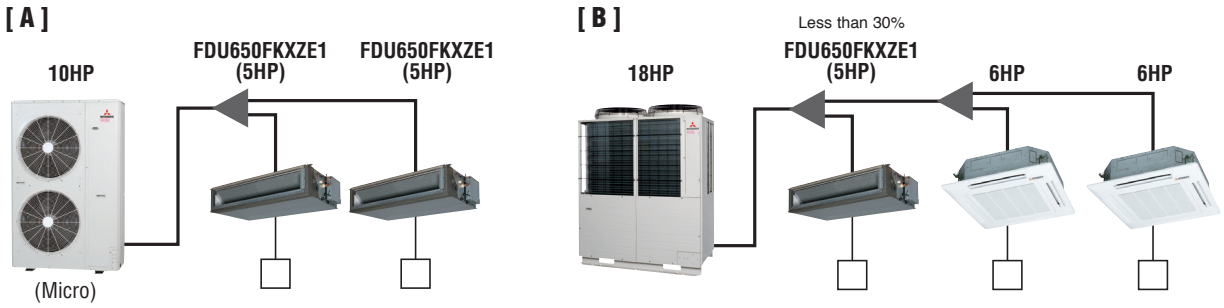

Concept (Difference between FDU-F and SAF)

SAF is the energy recovery ventilation unit which can recover heat energy from exhaust air to supply air and "has no air processing function, but FDU-F is air processing unit which can treat the supply air closer to room temperature by cooling or heating in connection with KXZ refrigerant system and exhaust air is discharged to outside of the room.

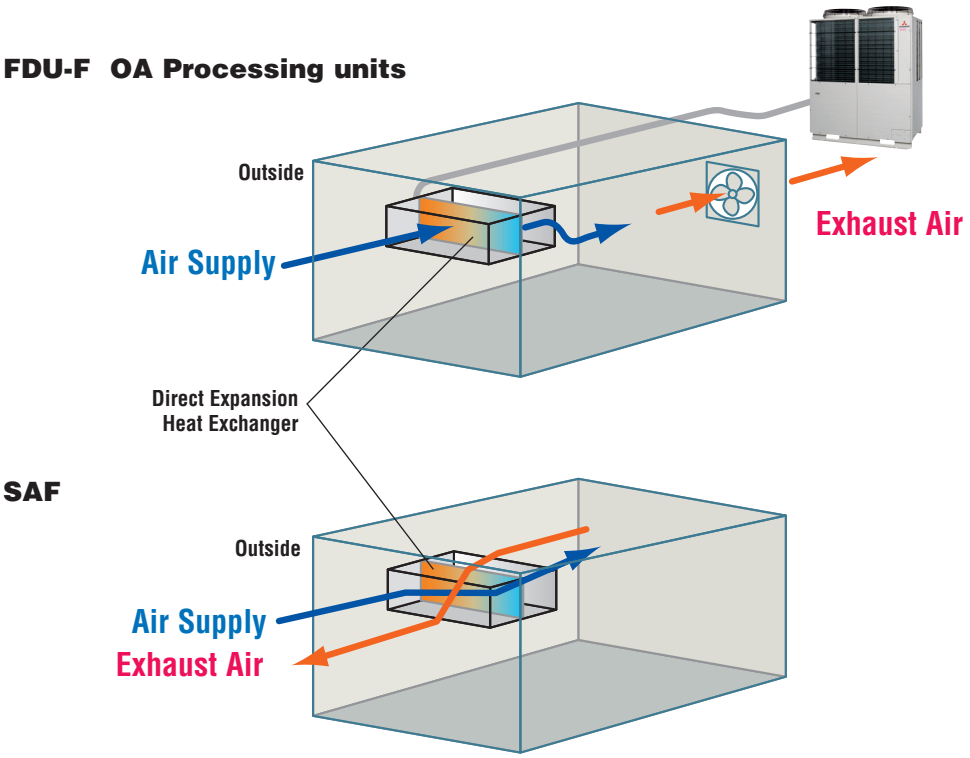

Specifications

Item		Model	FDU650FKXZE1	FDU1100FKXZE1	FDU1800FKXZE1	FDU2400FKXZE1
Nominal cooling capacity		kW	9.0	14.0	22.4	28.0
Nominal heating capacity		kW	6.5	10.5	16.0	21.5
Power source			1 Phase 220-240V, 50Hz			
Power consumption	Cooling	kW	0.24-0.25	0.35-0.36	1.16-1.20	1.16-1.20
	Heating		0.24-0.25	0.35-0.36	1.16-1.20	1.16-1.20
Sound pressure level		dB(A)	Hi:31	Hi:37	Hi:42	Hi:45
Exterior dimension HxWxD		mm	280x950x635	280x1370x740	379x1600x893	
Net weight		kg	34	54	89	89
Air flow (Standard)		m³/min	Hi:11	Hi:18	Hi:30	Hi:40
External static pressure		Pa	200 (at Hi Air flow)			
Air filter, Q'ty			Procure locally			
Remote control(option)			wired:RC-EX1A, RC-E5, RCH-E3 wireless:RCN-KIT3-E			
Installation data Refrigerating piping size		mm (in)	Liquid line:ø9.52(3/8") Gas line:ø15.88(5/8")		Liquid line:ø9.52(3/8") Gas line:ø19.05(3/4")	Liquid line:ø9.52(3/8") Gas line:ø22.22(7/8")

1. The data are measured at 33ºCDB 28ºCWB (68%RH) during cooling and 0ºCDB-2.9ºCWB (50%RH) during heating (no frost).
2. Temperature range of outdoor air must be 20~40ºCDB (32ºCWB) during cooling and 0~24ºCDB during heating.
3. Sound level indicates the value in an anechoic chamber. During operation these value are somewhat higher due to ambient conditions.
4. The factory E.S.P. setting is set within the range of 10 - 120Pa.If SW8-4 is turned to "ON", E.S.P. setting range can be changed to 10 - 200 Pa. (with RC-EX1A and RC-E5 only)

Dimensions

All measurements in mm.

FDU650FKXZE1

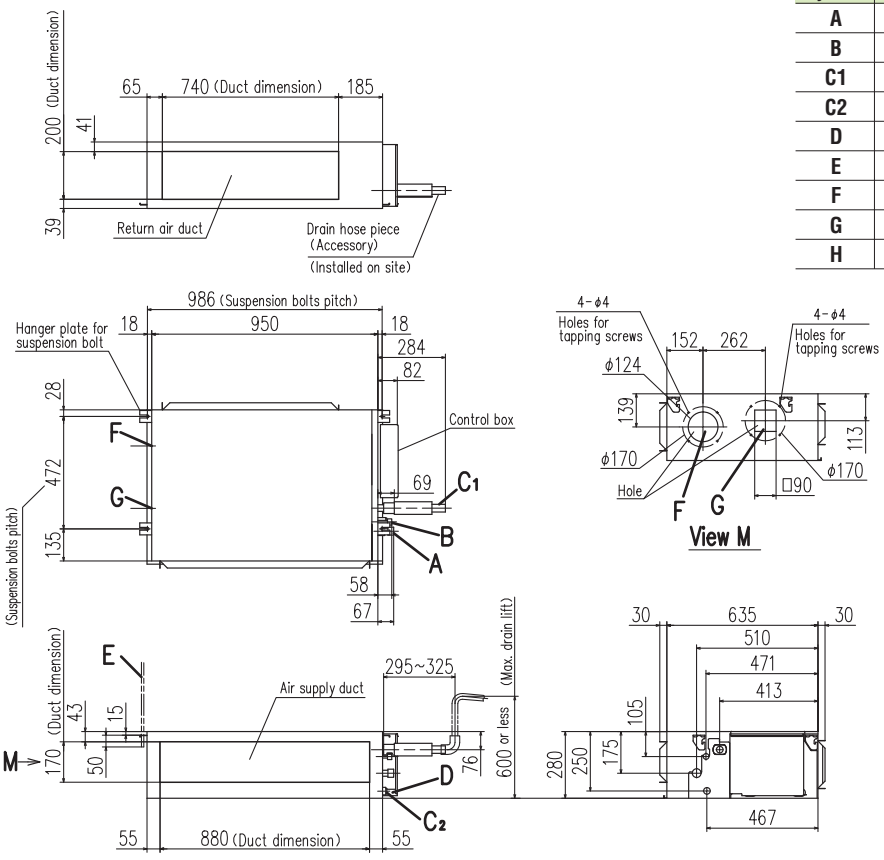

Symbol	Content	
A	Gas piping	ø15.88 (5/8") (Flare)
B	Liquid piping	ø9.52 (3/8") (Flare)
C1	Drain piping	VP25(O.D.32)
C2	Drain piping(Gravity drainage)	V20(O.D.26)
D	Hole for wiring	
E	Suspension bolts	M10
F	Outside air opening for ducting	(Knock out)
G	Air outlet opening for ducting	(Knock out)
H	Inspection hole	(450X450)

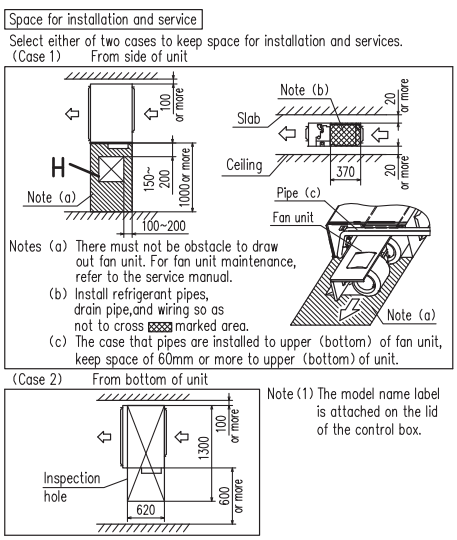

FDU1100FKXZE1

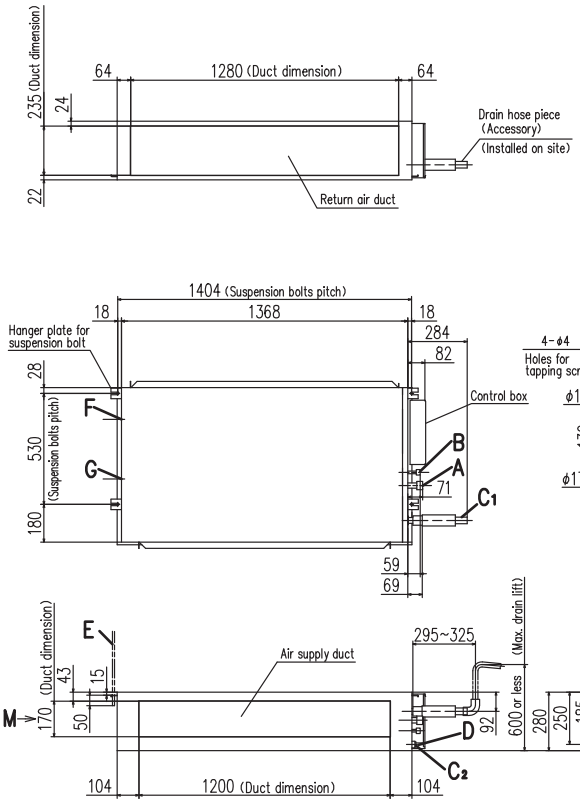

Symbol	Content	
A	Gas piping	ø15.88 (5/8") (Flare)
B	Liquid piping	ø9.52 (3/8") (Flare)
C1	Drain piping	VP25(O.D.32)
C2	Drain piping(Gravity drainage)	V20(O.D.26)
D	Hole for wiring	
E	Suspension bolts	M10
F	Outside air opening for ducting	(Knock out)
G	Air outlet opening for ducting	(Knock out)
H	Inspection hole	(450X450)

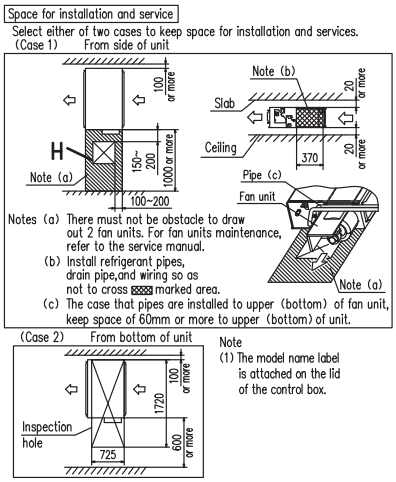

FDU1800FKXZE1, FDU2400FKXZE1

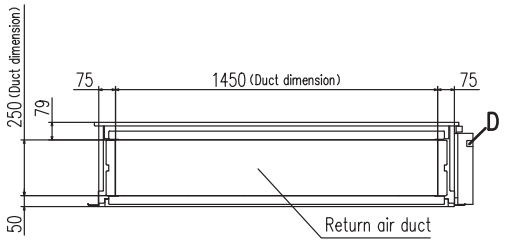

Symbol	Content		
	MODEL	1800	2400
A	Gas piping	ø19.05 (3/4")	ø22.22 (7/8")
B	Liquid piping	ø9.52 (3/8") (Brazing)	
C	Drain piping(Gravity drainage)	VP25(O.D.32)	
D	Hole for wiring		
E	Suspension bolts	M10	
F	Inspection hole	(450X450)	

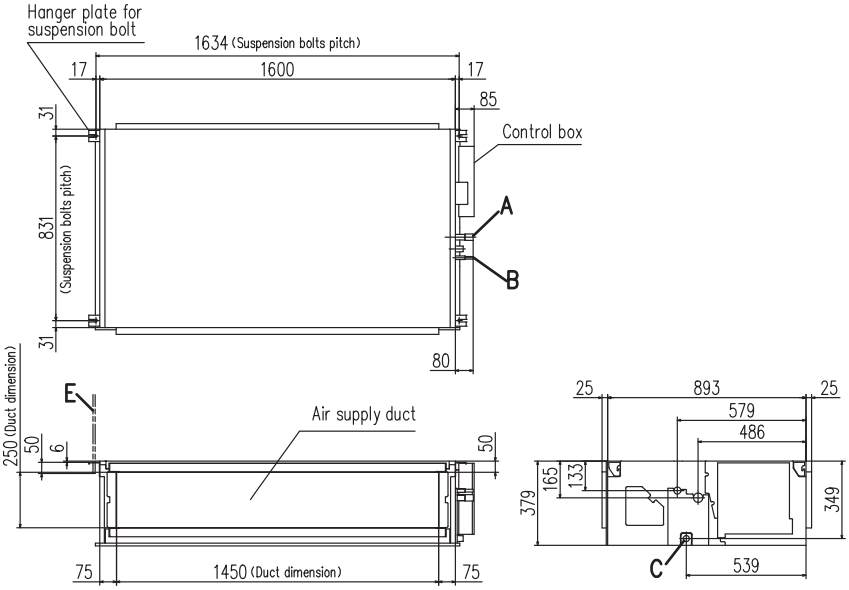

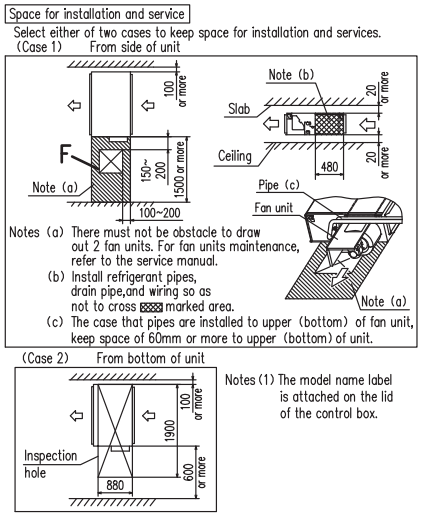

Fresh Air Ventilation and Heat Exchange unit
SAF-E6

Model No.

SAF150E6
SAF250E6
SAF350E6
SAF500E6
SAF650E6
SAF800E6
SAF1000E6



Energy Performance of Building Directive - EPBD

EPBD limit the amount of electrical/gas power to be used to provide heating or cooling in commercial buildings. Therefore the building designer needs to select energy efficient heating/cooling equipment, and to minimise energy losses through ventilation systems.

The SAF recovers heat energy which would otherwise be exhausted to atmosphere, and uses this energy to warm the air entering the building. The reverse happens in warmer climates, where the exhausted cool air is used to partially cool the incoming air.

Capturing this waste energy, means the heating/ cooling requirements of the building are reduced, so smaller size plant can be selected, savings can be made in long term energy consumption, and carbon emissions are reduced.

Increased external static pressure at UHi air flow

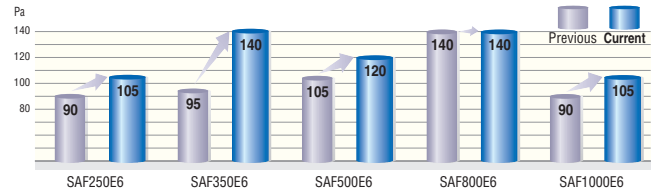

Specifications

Item			Model	SAF150E6	SAF250E6	SAF350E6	SAF500E6	SAF650E6	SAF800E6	SAF1000E6
Power source				1 Phase 220-240V, 50Hz						
Exterior dimensions Height x Width x Depth			mm	270x970x467	270x882x599	317x1050x804	317x1090x904	388x1204x884	388x1322x884	388x1322x1134
Exterior appearance				Galvanized steel sheet						
Power input			W	92-107	108-123	178-185	204-225	269-295	360-378	416-432
Running current			A	0.42-0.45	0.49-0.51	0.81-0.77	0.93-0.94	1.22-1.23	1.64-1.58	1.89-1.80
Capacity	UHi	Enthalpy exchange efficiency	Cooling	63	63	66	62	62	65	65
			Heating	70	70	69	67	68	71	71
		Temperature exchange efficiency		75						
	Hi	Enthalpy exchange efficiency	Cooling	63	63	66	62	62	65	65
			Heating	70	70	69	67	68	71	71
		Temperature exchange efficiency		75						
	Lo	Enthalpy exchange efficiency	Cooling	66	65	71	64	66	68	70
			Heating	73	72	73	69	73	74	76
		Temperature exchange efficiency		77	77	78	76	79	76	79
			%							
Motor & Q'ty			W	20 x 2	20 x 2	40 x 2	70 x 2	100 x 2	180 x 2	180 x 2
Air handling equipment Fan type & Q'ty				Sirocco fan x 2						
Air flow		UHi	m^3/h	150	250	350	500	650	800	1000
		Hi		150	250	350	500	650	800	1000
		Lo		120	190	240	440	460	630	700
External static pressure		UHi	Pa	80	105	140	120	65	140	105
		Hi		70	95	60	60	40	110	80
		Lo		25	45	45	35	40	55	75
Net weight			kg	25	29	49	57	68	71	83
Remote control				Included						
Air filter	Supply air			Protection for element (Washable) PS400						
	Exhaust air									

Structure (SAF800E6)

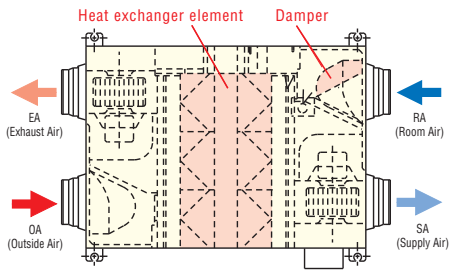

Principle of operation (simple ventilation)

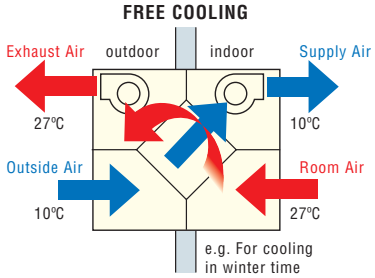

Principle of operation (heat exchanging)

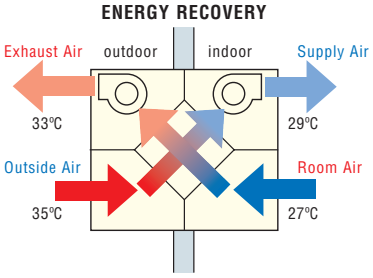

Dimensions

All measurements in mm.

SAF150E6, SAF250E6, SAF350E6, SAF500E6

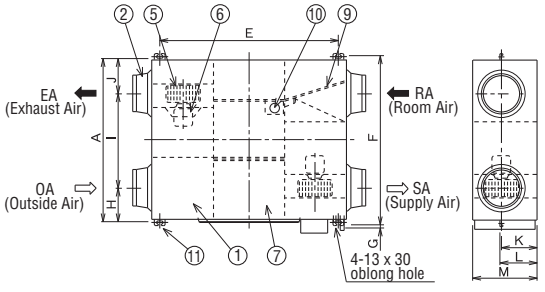

Applied duct

Model No.	Nominal diameter
SAF150E6	ø100
SAF250E6	ø150
SAF350E6	
SAF500E6	ø200

Dimension table

Unit:mm

Model	A	B	C	E	F	G	H	I	J	K	L	M	N	P
SAF150E6	467	970	49	810	525	19	82	303	82	135	159	270	ø98	ø110
SAF250E6	599	882	95		655		142	315	142				ø144	ø164
SAF350E6	804	1050	70	978	860		112	580	112	159	182	317		ø162
SAF500E6	904	1090		1018	960		132	640	132				ø194	ø210

SAF650E6, SAF800E6, SAF1000E6

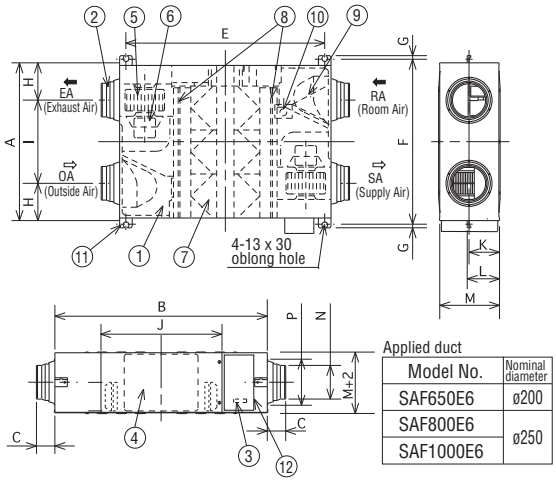

Applied duct

Model No.	Nominal diameter
SAF650E6	ø200
SAF800E6	ø250
SAF1000E6	

Dimension table

Unit:mm

Model	A	B	C	E	F	G	H	I	J	K	L	M	N	P
SAF650E6	884	1204	70	1132	940	19	132	620	560	194	218	388	ø194	ø210
SAF800E6		1322	85	1250			228	428	612				ø242	ø258
SAF1000E6	1134				1190			678						

NO.	Name	Qt'y
①	Frame	1
②	Adaptor	4
③	Terminal board	1
④	Inspection Cover	1
⑤	Fan	2 ※
⑥	Motor	2 ※
⑦	Heat Exchange Element SAF150E6 SAF250E6 SAF350E6 SAF500E6 SAF650E6 SAF800E6 SAF1000E6	 1 1 2 2 3 3 4
⑧	Filter	2
⑨	Damper	1
⑩	Damper Motor	1
⑪	Suspension fitting	4
⑫	Electrical components box	1

※Model SAF350E6, SAF500E6 and SAF600E6 have different fan and motor locations.

Installation reference

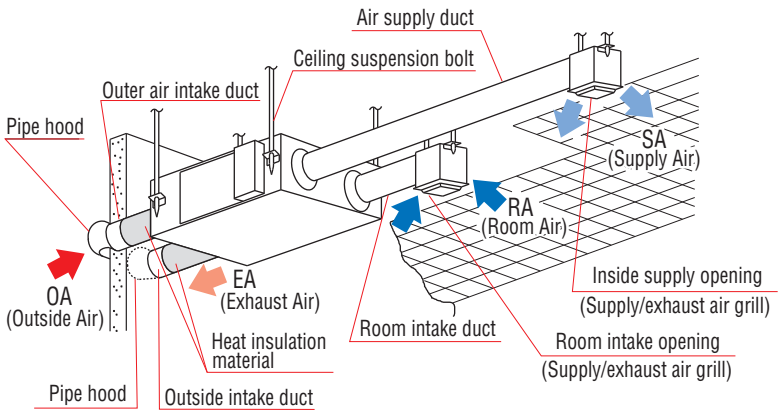

Note:An inspection port is needed for cleaning the heat exchanger and filter 1 or 2 times a year.

Fresh Air DX Assembly

Model No.
SAF-DX250E6
SAF-DX350E6
SAF-DX500E6
SAF-DX800E6
SAF-DX1000E6



Drain up kit (option, built-in type)
(600mm)

DXA-DU-E

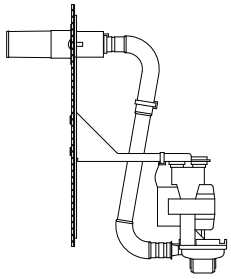

Remote control (option)

Wired



RC-E5 **RCH-E3**

Wireless



RCN-KIT3-E

- SAF-DX is a heating or cooling coil incorporating MHI KXZ series controls. It can be used in combination with our SAF series of total heat exchanger.
- Combination of SAF-DX together with other indoor units is possible. The capacity code index of each model is shown below and must be used when making the system selection. Total capacity code index must be within 100% of outdoor unit capacity code index.
- Remote control option is the same as with other indoor units (see above). Connection to all Superlink controls is also possible.
- Optional condensate lift mechanism is also available (600mm height).
- Return air temp. control or supply air temp. control can be selectable.

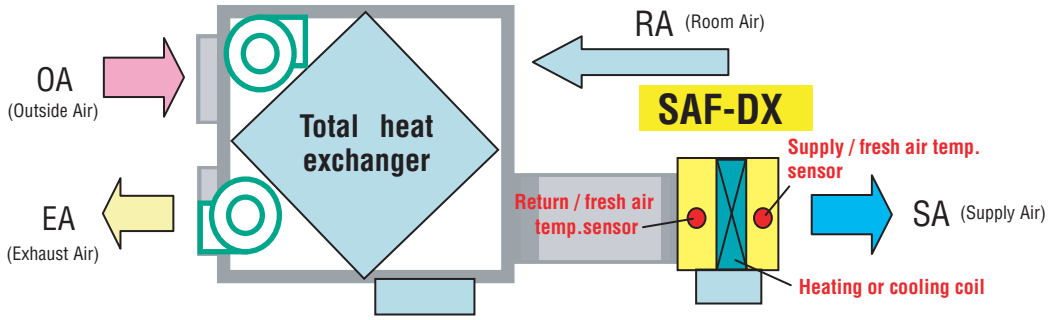

SAF-DX can provide heating or cooling to the fresh air supplied through a 3rd party air handling unit or total heat exchanger such as our SAF series.

Specifications

Item		Model	SAF-DX250E6	SAF-DX350E6	SAF-DX500E6	SAF-DX800E6	SAF-DX1000E6
Nominal cooling capacity *1		kW	2.0	2.8	3.6	5.6	6.3
Nominal heating capacity *2		kW	1.8	2.2	2.8	4.5	5.6
Capacity code			22	28	36	56	71
Power source			1 Phase 220-240V, 50Hz				
Power consumption	Cooling	W	7.2-7.2				
	Heating		7.2-7.2				
Running current	Cooling	A	0.05-0.05				
	Heating		0.05-0.05				
Exterior dimensions H x W x D		mm	315 x 452 x 422		315 x 537 x 422	315 x 682 x 422	315 x 822 x 422
Net weight		kg	12.3		13.6	16.1	18.4
Air flow (Standard)		CMH	250	350	500	800	1000
Internal resistance		Pa	38	66			
Remote control(option)			wired: RC-E5, RCH-E3 wireless: RCN-KIT3-E				
Installation data Refrigerant piping size		mm(in)	Liquid line:ø6.35(1/4") Gas line:ø9.52(3/8")		Liquid line:ø6.35(1/4") Gas line:ø12.7(1/2")		Liquid line:ø9.52(3/8") Gas line:ø15.88(5/8")

(1) The data are measured at the following conditions.

Item	Return/fresh air temperature		Outdoor air temperature		Standards
Operation	DB	WB	DB	WB	
Cooling*1	27ºC	19ºC	35ºC	24ºC	ISO-T1
Heating*2	20ºC		7ºC	6ºC	

(2) This air-conditioner is manufactured and tested in conformity with ISO-T1 "UNITARY AIR-CONDITIONERS".

Dimensions

All measurements in mm.

SAF-DX250E6,350E6

Symbol	Content	
A	Gas piping	ø9.52 (3/8") (Flare)
B	Liquid piping	ø6.35 (1/4") (Flare)
C	Drain piping	R1
D	Hole for power source line	
E	Wiring hole for total enthalpy heat exchanger	
F	Hole for communication line	
G	Suspension bolts	M10

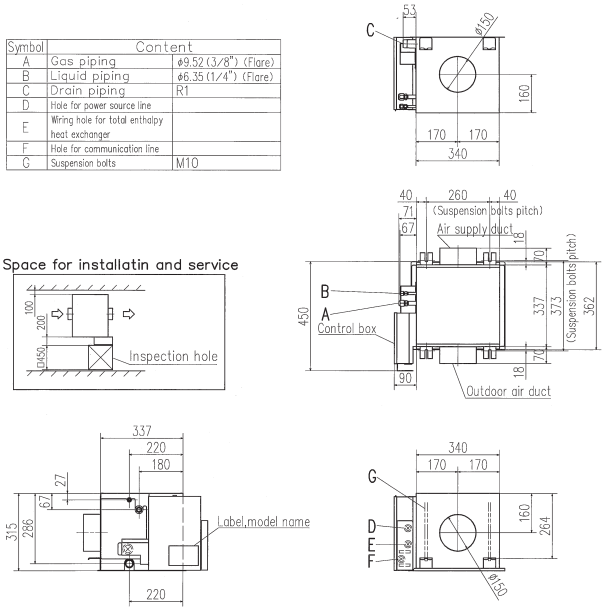

SAF-DX500E6

Symbol	Content	
A	Gas piping	ø12.7 (1/2") (Flare)
B	Liquid piping	ø6.35 (1/4") (Flare)
C	Drain piping	R1
D	Hole for power source line	
E	Wiring hole for total enthalpy heat exchanger	
F	Hole for communication line	
G	Suspension bolts	M10

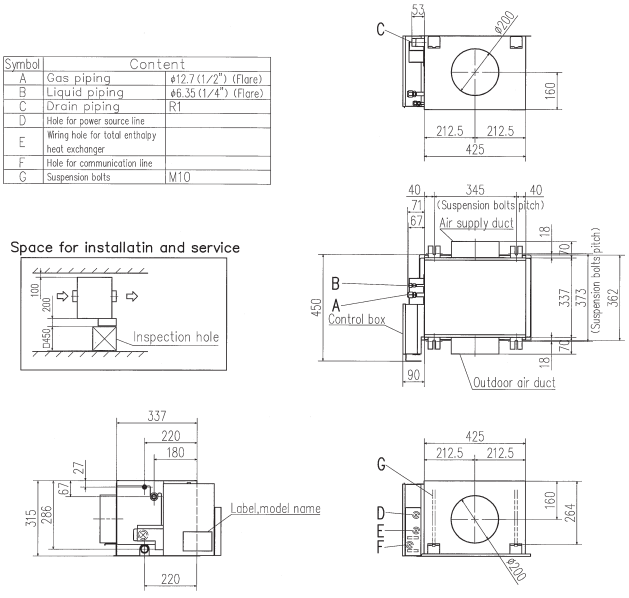

SAF-DX800E6

Symbol	Content	
A	Gas piping	ø12.7 (1/2") (Flare)
B	Liquid piping	ø6.35 (1/4") (Flare)
C	Drain piping	R1
D	Hole for power source line	
E	Wiring hole for total enthalpy heat exchanger	
F	Hole for communication line	
G	Suspension bolts	M10

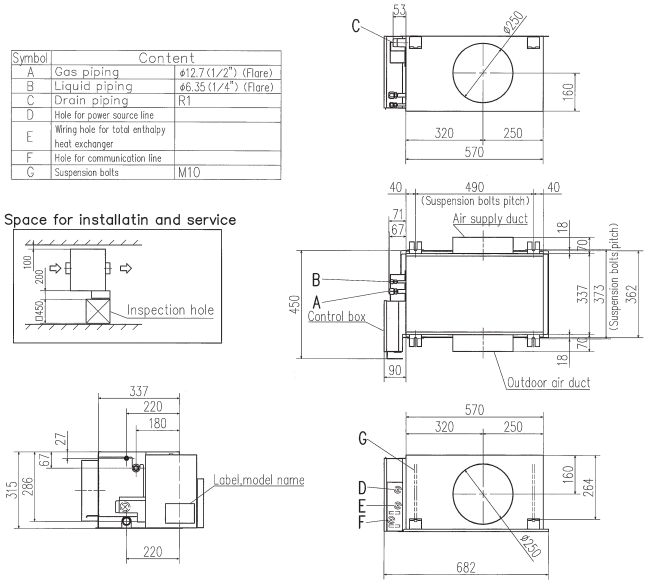

SAF-DX1000E6

Symbol	Content	
A	Gas piping	ø15.88 (5/8") (Flare)
B	Liquid piping	ø9.52 (3/8") (Flare)
C	Drain piping	R1
D	Hole for power source line	
E	Wiring hole for total enthalpy heat exchanger	
F	Hole for communication line	
G	Suspension bolts	M10

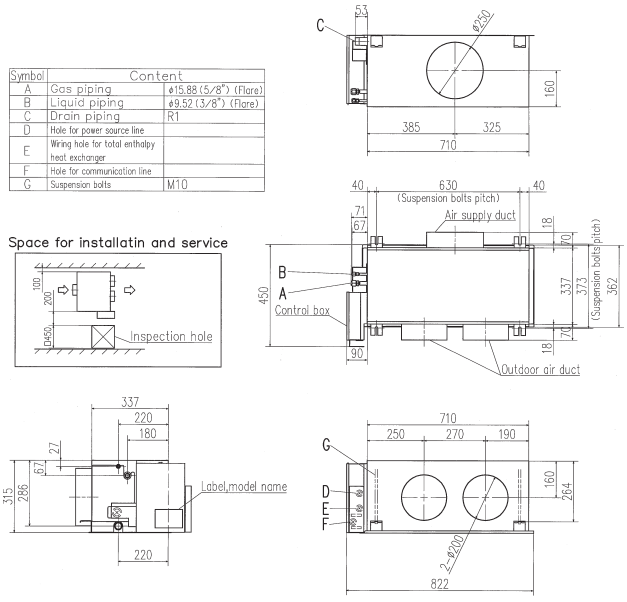

EEV-KIT

- EEV-KIT is a control kit for operating a locally provided AHU and/or fan coil units with direct expansion heat exchanger coils in connection with KXZ system.
- EEV-KIT is composed of, EEV-Control ASSY and EEV-Set.

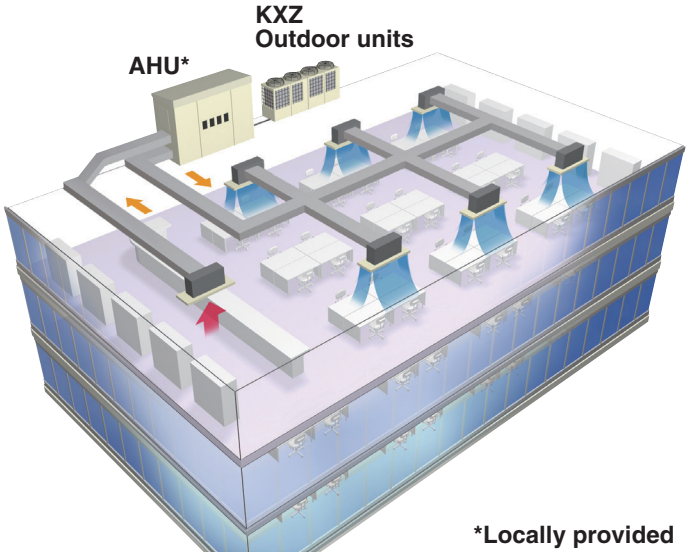

*Locally provided

Features

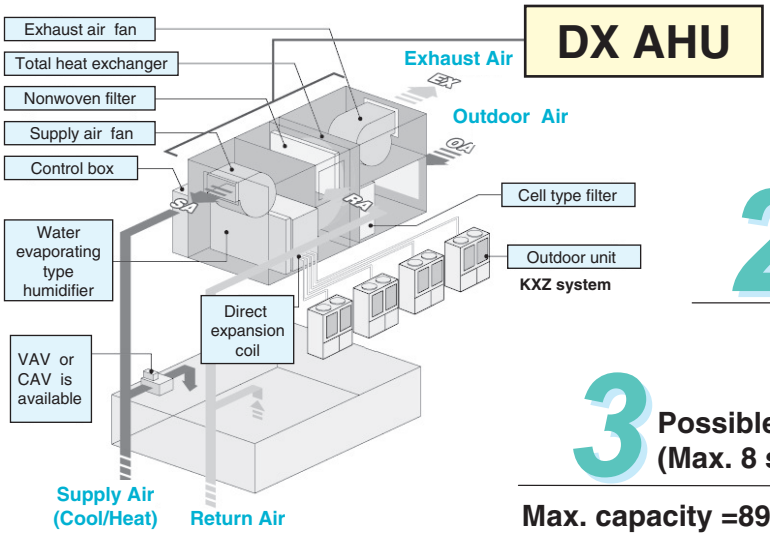

1 **Applicable to air cooled type heat pump outdoor unit for heat source**

2 **Applicable to direct expansion coils for heat exchanger in the AHU**

3 **Possible to connect KXZ systems (Max. 8 systems) to one air handling unit**

Max. capacity =896kW (112kW × 8): cooling capacity

- EEV-KIT uses controlling technology of KXZ.
- Therefore can be connect to superlink system.
- A remote controller for KXZ can be used.
- Operation command to indoor fan motors is sent from EEV-KIT.
- Switching between return air temperature control and supply air temperature control can be done.

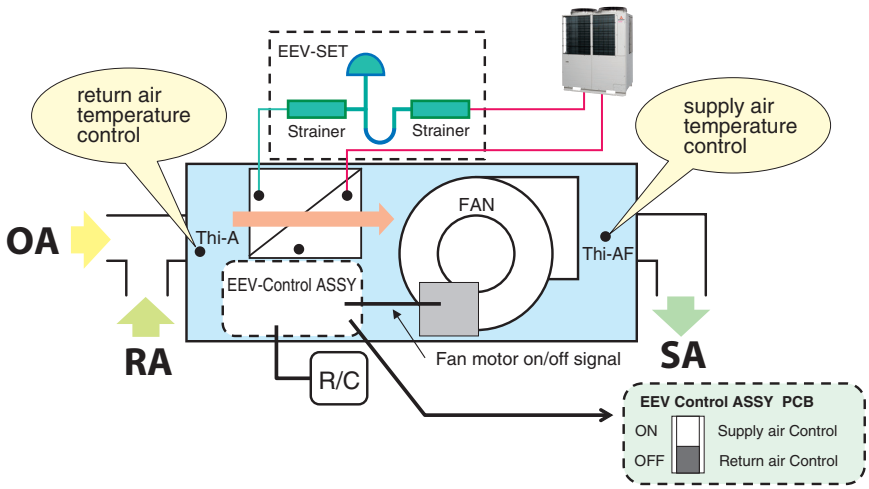

Contents

●EEV-Control ASSY: Following 2 types

Refrigeration system	EEV-Control ASSY	
	EEVKIT6-E-M	EEVKIT6-E-C
Single		1 box-Many boxes
Multi	1 box (for master)	Many boxes (for slave)

●EEV-Set: Select from following 3 types according to coil capacity

Type	EEV6-71-E	EEV6-160-E	EEV6-280-E
Capacity	22 - 71	90 - 160	224 - 280

Concept of System

DX AHU : Direct Expansion Air handling unit equipped with the direct expansion coil

<Advantages>

- Easy Installation
- Space saving installation
- Low construction cost
- Easy operation & Maintenance
- High efficiency & Performance

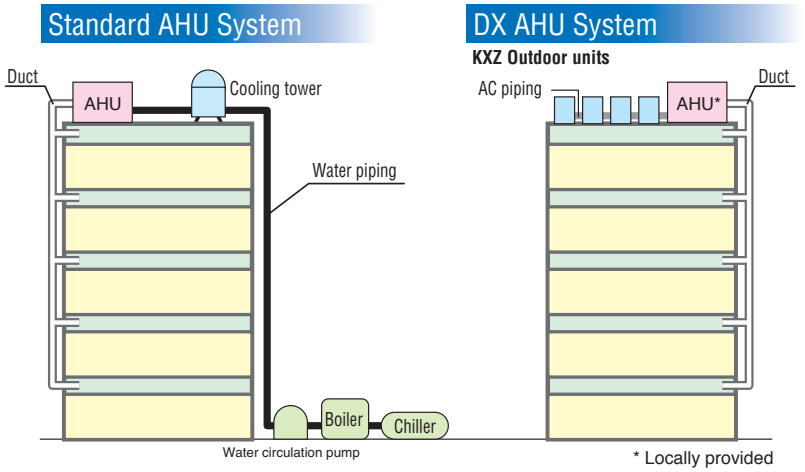

Control system SUPERLINK II

