MITSUBISHI HEAVY INDUSTRIES, LTD.

Our Technologies, Your Tomorrow

R410A

2015

Eco·lution

High Performance Air-Conditioning









NEW

eco touch
REMOTE CONTROL

FD series

Inverter Packaged Air-Conditioners

50/60Hz

10P01E-A-0

eco touch REMOTE CONTROL

Advanced touch screen panel with full dot Liquid Crystal display

User friendly

- LCD panel with light tap operation introduced as the industry's first
- Simple interface with only three buttons

High level of visibility

- Big LCD with 3.8 inch full dot display
- Back light function
- Multi language display (9 languages)

NEW

RC-EX1A



eco touch

Run / Stop

High power operation

The highest capacity operation (Max 15 minutes)

- Increasing compressor speed
- Increasing air flow volume

Energy-saving operation

- Changes set temperature. At 28°C in cooling mode and 22°C in heating mode, 25°C in auto mode.
- Operation correction by outdoor temperature

Simple setting by tapping button only

Basic operation

All settings done by tapping touch screen panel

Operation mode setting screen



The desired operation mode can be selected by simply tapping this button.



Setting temperature screen



You can select the temperture as desired by tapping ▲▼ button.

Operation mode

- Cooling
- Fan
- Dry
- Heating
- Auto

Main functions

Saving energy

Sleep timer
Peak cut timer
Automatic temerature set back
Weekly timer
Set ON/OFF timer by hour
Set ON/OFF timer by clock

Comfort

Individual flap control
High power operation
External ventilation ON/OFF
Warming up operation
Automatic fan speed
Temperature increment setting by 0.5°C

Convenience

LCD contrast setting
Back light setting
Filter sign
Control sound
Outdoor silent mode
Summer time setting
Home leave mode
Indoor & outdoor temperature display
Heating standby display
Defrosting operation display
Auto cooling/heating display
°C/°F display
Administrator settings
Room name setting

Service

Error code display
Operation data display
Next service date display
Contact company display
USB connection (mini-B)

Hyper Inverter

Our new advanced technology has realized high efficiency, strong heating and long piping. This contributes to the environmental protection through energy saving and permits installation of the units (3~6HP) considering a heating operation under temperature conditions down to -20˚C and design flexibility has been improved by extension of piping length to 100m.

Line up

HP

	1.5	2	2.5	3	4	5	6	8	10
Hyper Inverter	●	●	●	●	●	●	●	–	–

Blue Fin



1.5~2.5HP



3HP



4~6HP

High efficiency (comparison of FDT series)

The industry's highest COP levels are achieved by our latest technologies, such as new high efficient twin rotary compressors and the combination with new Hyper inverter outdoor units.

EER in cooling

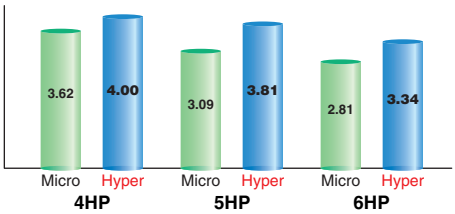

COP in heating

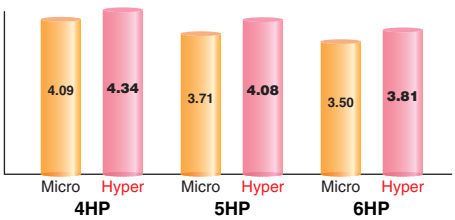

Long piping (in case of 4~6HP)

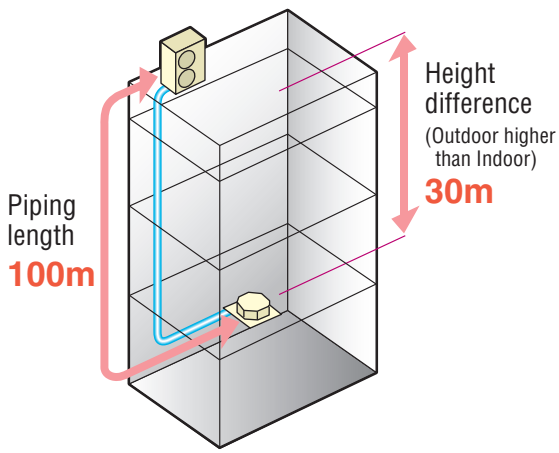

Strong heating (in case of 3~6HP)

-20°C: Heating operation down to -20°C
-15°C: Nominal heating capacity maintained at -15°C

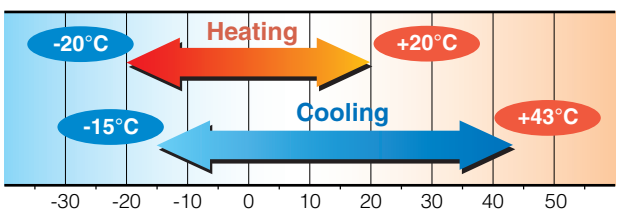

Max.heating capacity (kW)

	Hyper Inverter	Micro Inverter
FDC100VSX(4HP, 3phase 380V)	**16.0**	12.5
FDC125VSX(5HP, 3phase 380V)	**18.0**	16.0
FDC140VSX(6HP, 3phase 380V)	**20.0**	16.5

MITSUBISHI HEAVY INDUSTRIES, LTD.

Leading powerful heating capacity in the industry

Thanks to optimization of refrigeration control with use of electric expansion valve and development of new twin rotary compressors, max heating capacity has been increased.
Hyper Inverter series can reach the set temperature very quickly, keeping nominal heating capacity when outdoor temperature is -15°C. It is effective to be used even in cold area.

Temperature of supply air can reach 40°C in 4 minutes after start up under low temperature operation conditions (at both indoor and outdoor temperature of 2°C) and can reach 50°C in 8 minutes after that.

Heating capacity (in case of 5HP, 3phase 380V)

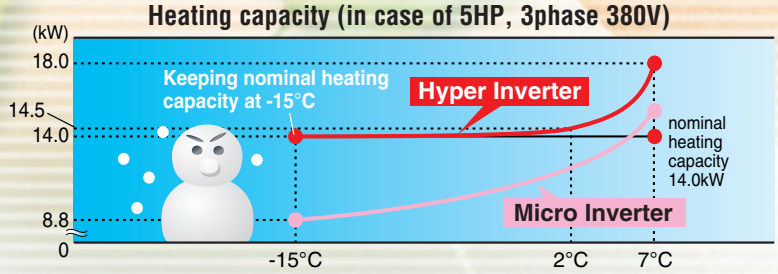

model name	nominal heating capacity (kW at outdoor temperature of 7°C)	heating capacity at outdoor temperature of -15°C
FDC100VSX(4HP, 3phase 380V)	11.2kW	11.2kW
FDC125VSX(5HP, 3phase 380V)	14.0kW	14.0kW
FDC140VSX(6HP, 3phase 380V)	16.0kW	16.0kW

Please refer to our technical manual for installation conditions, operation range and heating/cooling capacities. (including 1phase 220V)

Heating capacity

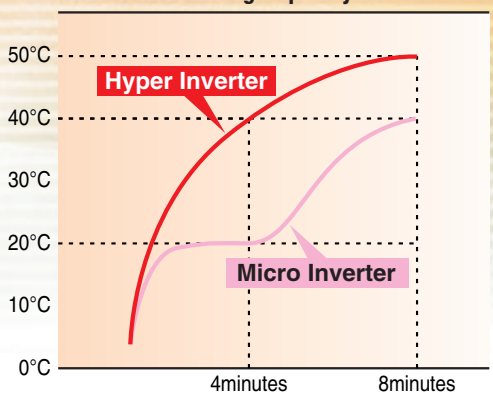

Micro Inverter

Line up

HP

	1.5	2	2.5	3	4	5	6	8	10
Micro Inverter	–	–	–	–	●	●	●	●	●

Compact Design of outdoor units

Easy installation



FDC100VN/VS (4.0HP)
FDC125VN/VS (5.0HP)
FDC140VN/VS (6.0HP)



FDC200VS (8.0HP)



FDC250VS (10.0HP)

Fits into elevators

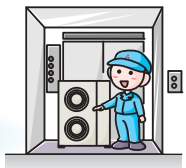

Size reduction and high efficiency performance on the DC twin rotary compressors (Micro Inverter 4-6HP)

Employment of DC twin rotary compressor has enabled to utilize a high-speed range of up to 120 rps at the maximum to secure the required capacity.
Optimum compressor control has been realized by employing the vector control* and the starting current has been improved significantly compared with former models. Moreover, vibration has been reduced.

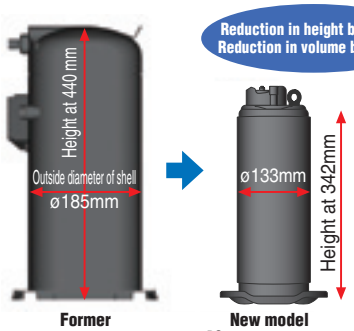

* Vector control means a. technique to realize an optimum control by converting the current wave to a smooth sinusoidal waveform



Employment of the scroll inverter compressors (8/10HP)

A control over wide range of capacity and a high efficiency has been realized by inverter-driven scroll compressors.
In addition, the starting current significantly is improved.
The size has also been reduced by 3.2% in height and 31.8% in volume.

Wide range of operation

Our new advanced technology has expanded the heating and cooling operation range.
This permits installation of the units under a low outdoor temperature conditions down to -20°C In heating operation and -15°C in cooling operation.

(FDC 100/125/140)

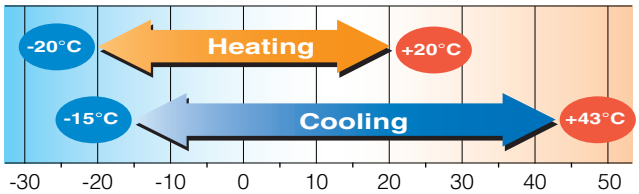

Ceiling Cassette -4way- Indoor units

FDT-FDTC

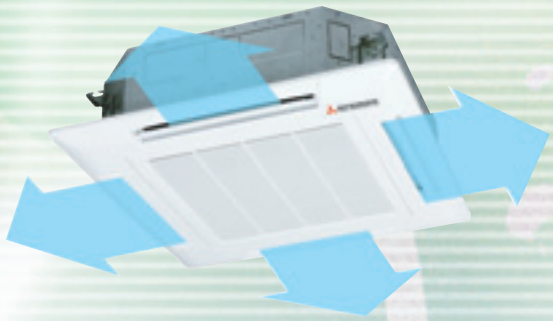

Individual flap control system

According to room temperature conditions, four directions of air flow can be controlled individually by following Flap control system.
As individual flap control is available even after installation, installation area became wider than before.



Due to optimization of outlet design of air flow with our new advanced technology, sufficient air flow is secured and long reach of air flow is realized.(FDT)

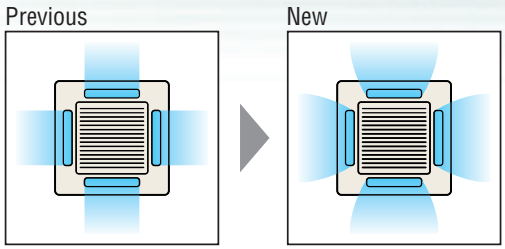

Flap control system

The flap can swing within the range of upper and lower flap position selected with wired remote control. (this system is applied for FDEN, SRK type also)

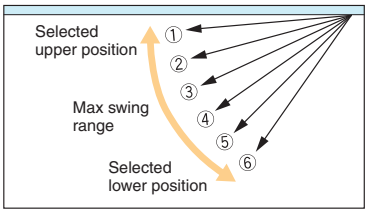

*Wireless remote control and RCH-E3 is not applicable to the Individual flap control system and the Flap control system.

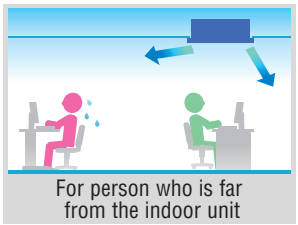
For person who is far from the indoor unit

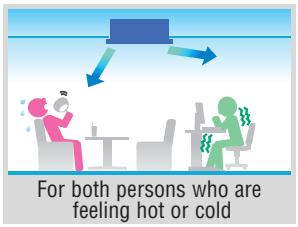
For both persons who are feeling hot or cold

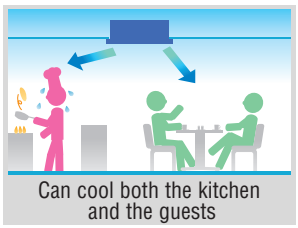
Can cool both the kitchen and the guests

The thinnest design

Thanks to new design of heat exchanger changed from 2 parts to 1 part, the height of indoor unit is reduced drastically.

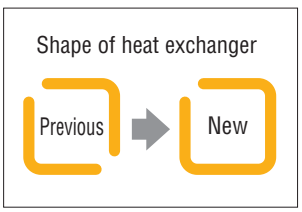

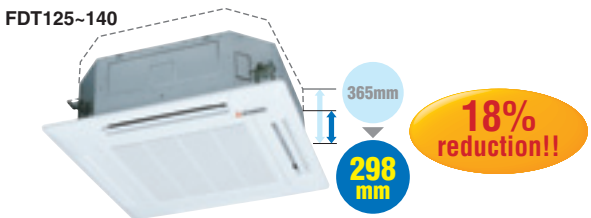

High efficiency

- **Reduction of air flow pressure loss**

  Expansion of outlet air flow area realizes reduction of pressure loss caused by air flow in the indoor unit. Load of fan motor is decreased and efficiency is increased.

- **Increase of heat transfer efficiency**

  Applying high efficient piping in heat exchanger and optimization of heat exchanger (2parts ➡ 1part) increases heat transfer efficiency.

Achieved COP 5.67

based on 50% capacity of FDT100V in heating operation
Air-conditioners are generally selected with the operation under the most severe ambient temperature conditions.
The inverter constantly adjusts compressor output to meet the exact demand of the indoor units.
i.e. In case that selecting the capacity of an inverter air-conditioner based on heating operation at -5°C, its capacity drops by 50% at 7°C(ISO-TI measurement condition) and operation period at 50% capacity is normally longer than that at 100% of nominal heating capacity.

Considering annual electrical power consumption of inverter air-conditioners, it is quite important to give the first priority to 50% actual capacity and selecting inverter air-conditioners is the best solution for saving energy and protecting the environment.

DUCT CONNECTED -Middle Static pressure-

FDUM

NEW



Automatic external static pressure (E.S.P.) control

Duct design was simplified.
Using DC motor, the most optimum air flow volume can be achieved by this automatic control.

Indoor unit will recognize external static pressure by itself automatically and keep rated air flow volume.

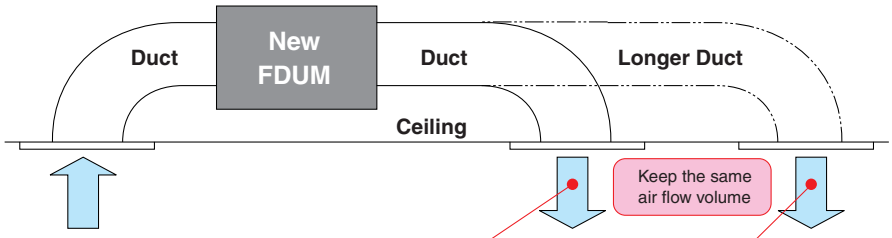

Setting No.	No.1	No.2	No.3	No.4	No.5	No.6	No.7	No.8	No.9	No.10
E.S.P.	10Pa	20Pa	30Pa	40Pa	50Pa	60Pa	70Pa	80Pa	90Pa	100Pa



External static pressure (E.S.P.) can be set by E.S.P. button.

Improvement of the serviceability

Fan unit (impeller and motor) can be pulled out from the right side of the unit. Maintenance can be available from the right side or the bottom side.

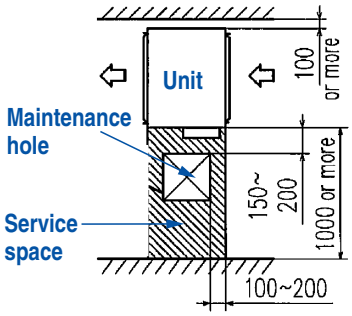

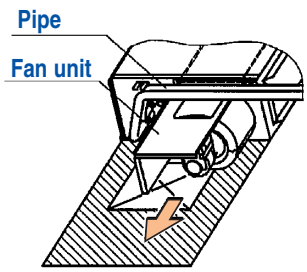

Improvement of low tap noise dB(A)

Air flow sound was reduced by new fan and casing design.
Refrigerant flow sound was decreased by advanced refrigerant distributor design.

Indoor model name	FDUM50VF	FDUM60VF	FDUM71VF	FDUM100VF	FDUM125VF	FDUM140VF
Nominal cooling capacity	5.0kW	6.0kW	7.1kW	10.0kW	12.5kW	14.0kW
NEW FDUM	**26**	**25**	**25**	**30**	**30**	**30**
Current FDUM	**28**	**28**	**29**	**32**	**33**	**33**
Improvement	**-2**	**-3**	**-4**	**-2**	**-3**	**-3**

SINGLE [OUTDOOR UNIT : INDOOR UNIT = 1 : 1]

Type			Capacity (Hyper Inverter)				
		HP	1.5	2.0	2.5	3.0	4.0
		kW	4.0	5.0	6.0	7.1	10.0
		Btu/h	13,700	17,100	19,100	23,900	34,100
		kcal/h	3,440	4,300	4,816	6,020	8,600
CEILING CASSETTE	4way FDT 	Indoor unit					
			FDT40VF	FDT50VF	FDT60VF	FDT71VF	FDT100VF
		Outdoor unit 1phase	SRC40ZJX-S	SRC50ZJX-S	SRC60ZJX-S	FDC71VNX	FDC100VNX
		Outdoor unit 3phase					FDC100VSX
		Set 1phase	**FDT40ZJXVF**	**FDT50ZJXVF**	**FDT60ZJXVF**	**FDT71VNXVF**	**FDT100VNXVF**
		Set 3phase					**FDT100VSXVF**
	4way compact (600 x 600mm) FDTC 	Indoor unit					
			FDTC40VF	FDTC50VF	FDTC60VF		
		Outdoor unit 1phase	SRC40ZJX-S	SRC50ZJX-S	SRC60ZJX-S		
		Set 1phase	**FDTC40ZJXVF**	**FDTC50ZJXVF**	**FDTC60ZJXVF**		
DUCT CONNECTED	High Static pressure FDU 	Indoor unit				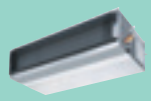	
						FDU71VD	FDU100VD
		Outdoor unit 1phase				FDC71VNX	FDC100VNX
		Outdoor unit 3phase					FDC100VSX
		Set 1phase				*FDU71VNXVD	*FDU100VNXVD
		Set 3phase					*FDU100VSXVD
	Low/Middle Static pressure NEW FDUM 	Indoor unit					
				FDUM50VF	FDUM60VF	FDUM71VF	FDUM100VF
		Outdoor unit 1phase		SRC50ZJX-S	SRC60ZJX-S	FDC71VNX	FDC100VNX
		Outdoor unit 3phase					FDC100VSX
		Set 1phase		**FDUM50ZJXVF**	**FDUM60ZJXVF**	**FDUM71VNXVF**	**FDUM100VNXVF**
		Set 3phase					**FDUM100VSXVF**
CEILING SUSPENDED	FDEN 	Indoor unit					
			FDEN40VF	FDEN50VF	FDEN60VF	FDEN71VF	FDEN100VF
		Outdoor unit 1phase	SRC40ZJX-S	SRC50ZJX-S	SRC60ZJX-S	FDC71VNX	FDC100VNX
		Outdoor unit 3phase					FDC100VSX
		Set 1phase	**FDEN40ZJXVF**	**FDEN50ZJXVF**	**FDEN60ZJXVF**	**FDEN71VNXVF**	**FDEN100VNXVF**
		Set 3phase					**FDEN100VSXVF**
FLOOR STANDING	FDF 	Indoor unit					
						FDF71VD	FDF100VD
		Outdoor unit 1phase				FDC71VNX	FDC100VNX
		Outdoor unit 3phase					FDC100VSX
		Set 1phase				**FDF71VNXVD**	**FDF100VNXVD**
		Set 3phase					**FDF100VSXVD**
OUTDOOR UNIT							

Range (Rated Cooling Capacity)

		Micro Inverter				
5.0	6.0	4.0	5.0	6.0	8.0	10.0
12.5	14.0	10.0	12.5	14.0	20.0	25.0
42,700	47,800	34,100	42,700	47,800	68,300	85,400
10,750	12,040	8,600	10,750	12,040	17,200	21,500
						
FDT125VF	FDT140VF	FDT100VF	FDT125VF	FDT140VF		
FDC125VNX	FDC140VNX	FDC100VN	FDC125VN	FDC140VN		
FDC125VSX	FDC140VSX	FDC100VS	FDC125VS	FDC140VS		
FDT125VNXVF	**FDT140VNXVF**	**FDT100VNVF**	**FDT125VNVF**	**FDT140VNVF**		
FDT125VSXVF	**FDT140VSXVF**	**FDT100VSVF**	**FDT125VSVF**	**FDT140VSVF**		
		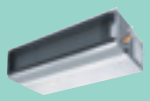	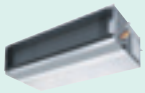			
FDU125VD	FDU140VD	FDU100VD	FDU125VD	FDU140VD	FDU200VF	FDU250VF
FDC125VNX	FDC140VNX	FDC100VN	FDC125VN	FDC140VN		
FDC125VSX	FDC140VSX	FDC100VS	FDC125VS	FDC140VS	FDC200VS	FDC250VS
***FDU125VNXVD**	***FDU140VNXVD**	***FDU100VNVD**	***FDU125VNVD**	***FDU140VNVD**		
***FDU125VSXVD**	***FDU140VSXVD**	***FDU100VSVD**	***FDU125VSVD**	***FDU140VSVD**	**FDU200VSVF**	**FDU250VSVF**
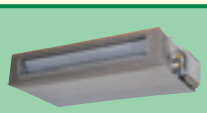						
FDUM125VF	FDUM140VF	FDUM100VF	FDUM125VF	FDUM140VF		
FDC125VNX	FDC140VNX	FDC100VN	FDC125VN	FDC140VN		
FDC125VSX	FDC140VSX	FDC100VS	FDC125VS	FDC140VS		
FDUM125VNXVF	**FDUM140VNXVF**	**FDUM100VNVF**	**FDUM125VNVF**	**FDUM140VNVF**		
FDUM125VSXVF	**FDUM140VSXVF**	**FDUM100VSVF**	**FDUM125VSVF**	**FDUM140VSVF**		
						
FDEN125VF	FDEN140VF	FDEN100VF	FDEN125VF	FDEN140VF		
FDC125VNX	FDC140VNX	FDC100VN	FDC125VN	FDC140VN		
FDC125VSX	FDC140VSX	FDC100VS	FDC125VS	FDC140VS		
FDEN125VNXVF	**FDEN140VNXVF**	**FDEN100VNVF**	**FDEN125VNVF**	**FDEN140VNVF**		
FDEN125VSXVF	**FDEN140VSXVF**	**FDEN100VSVF**	**FDEN125VSVF**	**FDEN140VSVF**		
						
FDF125VD	FDF140VD	FDF100VD	FDF125VD	FDF140VD		
FDC125VNX	FDC140VNX	FDC100VN	FDC125VN	FDC140VN		
FDC125VSX	FDC140VSX	FDC100VS	FDC125VS	FDC140VS		
FDF125VNXVD	**FDF140VNXVD**	**FDF100VNVD**	**FDF125VNVD**	**FDF140VNVD**		
FDF125VSXVD	**FDF140VSXVD**	**FDF100VSVD**	**FDF125VSVD**	**FDF140VSVD**		
						

*Not available in 60Hz

CEILING CASSETTE -4way-

FDT



FDT 40/50/60/71/
100/125/140VF

A CLASS

R410A

Remote control (Option)

Wired



RC-EX1A RC-E5 RCH-E3

Wireless



RCN-T-36W-E

Point 1 Arrangement of installation balance of indoor unit

Checking from access ports with detachable covers at each corner, arrangement of installation balance of indoor unit can be available without removing a panel. Workability is improved and time of installation is reduced.



Point 2 Easy checking of drain pan

Easy checking of drain pan condition is available by removing corner lid only. Due to new design changing fan motor is available without removing a panel. Temporally setting of drain pan is also available.

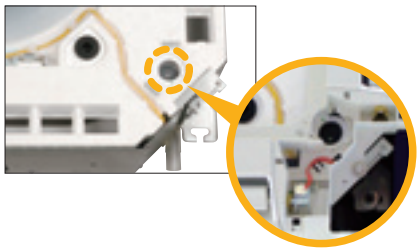

Point 3 700mm Drain Pump

Drain can be discharged upwards by 700mm from the ceiling surface. It allows a piping layout with a high degree of freedom Depending on the installation location and 260mm flexible hose as a standard equipment supports easy workability.

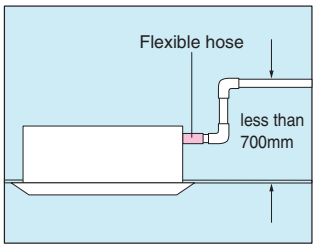

Outline drawing (Unit:mm)

Models FDT40,50,60,71VF

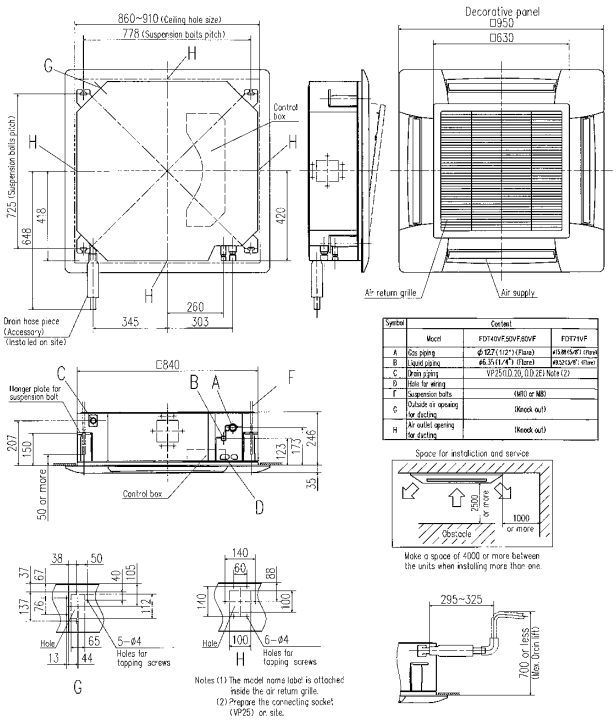

Models FDT100,125,140VF

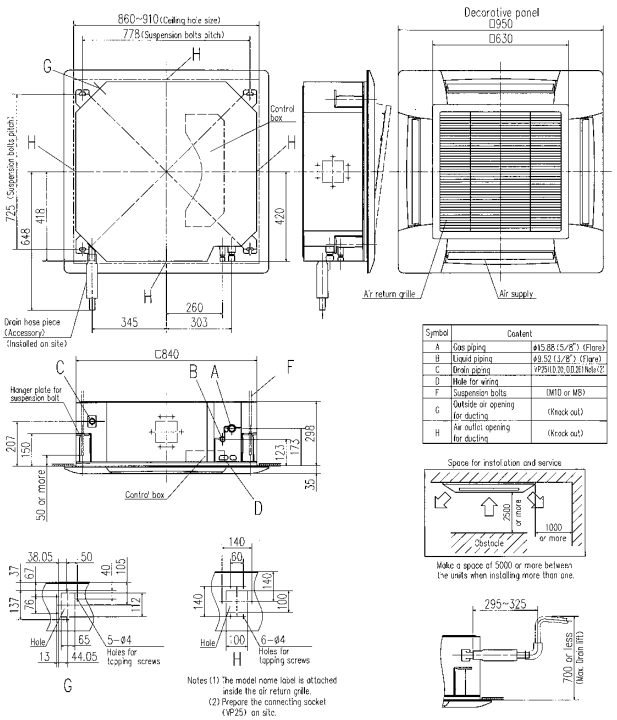

SPECIFICATIONS

				Hyper Inverter				
Set model name				FDT40ZJXVF	FDT50ZJXVF	FDT60ZJXVF	FDT71VNXVF	FDT100VNXVF
Indoor name				FDT40VF	FDT50VF	FDT60VF	FDT71VF	FDT100VF
Outdoor name				SRC40ZJX-S	SRC50ZJX-S	SRC60ZJX-S	FDC71VNX	FDC100VNX
Power source				1Phase 220-240V 50Hz, 1Phase 220V 60Hz				
Nominal cooling capacity (Min~Max)	ISO-T1(JIS)		kW	4.0 (1.1~4.7)	5.0 (1.1~5.6)	5.6 (1.1~6.3)	7.1 (3.2~8.0)	10.0 (4.0~11.2)
Nominal heating capacity (Min~Max)	ISO-T1(JIS)		kW	4.5 (0.6~5.4)	5.4 (0.6~6.3)	6.7 (0.6~7.1)	8.0 (3.6~9.0)	11.2 (4.0~12.5)
Power consumption	Cooling/Heating		kW	0.930/1.06	1.29/1.29	1.52/1.70	2.04/1.94	2.50/2.58
COP	Cooling/Heating			4.30/4.25	3.88/4.19	3.68/3.94	3.48/4.12	4.00/4.34
Energy label	Cooling/Heating			A/A	A/A	A/A	A/A	A/A
Inrush current (Max. running current)			A	5(12)	5(15)		5(17)	5(24)
Sound pressure level*1 ※	Indoor		dB(A)	Hi:33 Me:31 Lo:30			Hi:35 Me:33 Lo:31	Hi:40 Me:37 Lo:35
	Outdoor			50	Cooling:54 Heating:50	54	Cooling:51 Heating:48	Cooling:48 Heating:50
Sound power level*1	Outdoor		dB(A)	63	63	64	66	70
Air flow ※	Indoor		CMM	Hi:18 Me:16 Lo:14		Hi:18 Me:16 Lo:14	Hi:21 Me:19 Lo:17	Hi:27 Me:24 Lo:20
	Outdoor			Cooling:36 Heating:33	Cooling:40 Heating:33	Cooling:41.5 Heating:39	Cooling:60 Heating:50	100
Indoor unit: Exterior dimensions	Height x Width x Depth		mm	Unit:246x840x840 Panel:35x950x950				Unit:298x840x840 Panel:35x950x950
Indoor unit: Net weight	Unit+Panel		kg	27.5(Unit:22 Panel:5.5)		29.5(Unit:24 Panel:5.5)		32.5(Unit:27 Panel:5.5)
Indoor unit: Panel				T-PSA-3BW-E				
Indoor unit: Air filter, Q'ty				Pocket Plastic net x1 (Washable)				
Indoor unit: Remote control(option)				Wired:RC-EX1A,RC-E5, RCH-E3 Wireless:RCN-T-36W-E				
Outdoor unit: Exterior dimensions	Height x Width x Depth		mm	640x800(+71)x290			750x880(+88)x340	1,300x970x370
Outdoor unit: Net weight			kg	45			60	105
Outdoor unit: Type of compressor				Rotary			Rotary	
Outdoor unit: Ref.amount precharged			kg(m)	1.5(15)			2.95(30)	4.5(30)
Outdoor unit: Ref.piping size	Liquid/Gas		ø	6.35/12.7			9.52/15.88	
Range of usage: Ref.piping length			m	30			50	100
Range of usage: Vertical height difference	O/U is higher		m	20			30	30
Range of usage: Vertical height difference	O/U is lower		m	20			15	15
Operating temperature range	Cooling		O/U	-15~43*2				
Operating temperature range	Heating		O/U	-15~20			-20~20	

SPECIFICATIONS

				Hyper Inverter				
Set model name				FDT125VNXVF	FDT140VNXVF	FDT100VSXVF	FDT125VSXVF	FDT140VSXVF
Indoor name				FDT125VF	FDT140VF	FDT100VF	FDT125VF	FDT140VF
Outdoor name				FDC125VNX	FDC140VNX	FDC100VSX	FDC125VSX	FDC140VSX
Power source				1Phase 220-240V 50Hz, 1Phase 220V 60Hz		3Phase 380-415V 50Hz, 3Phase 380V 60Hz		
Nominal cooling capacity (Min~Max)	ISO-T1(JIS)		kW	12.5 (5.0~14.0)	14.0 (5.0~16.0)	10.0 (4.0~11.2)	12.5 (5.0~14.0)	14.0 (5.0~16.0)
Nominal heating capacity (Min~Max)	ISO-T1(JIS)		kW	14.0 (4.0~17.0)	16.0 (4.0~18.0)	11.2 (4.0~16.0)	14.0 (4.0~18.0)	16.0 (4.0~20.0)
Power consumption	Cooling/Heating		kW	3.28/3.43	4.19/4.20	2.50/2.58	3.28/3.43	4.19/4.20
COP	Cooling/Heating			3.81/4.08	3.34/3.81	4.00/4.34	3.81/4.08	3.34/3.81
Energy label	Cooling/Heating			A/A	A/A	A/A	A/A	A/A
Inrush current (Max. running current)			A	5(26)		5(15)		
Sound pressure level*1 ※	Indoor		dB(A)	Hi:42 Me:40 Lo:37	Hi:43 Me:41 Lo:38	Hi:40 Me:37 Lo:35	Hi:42 Me:40 Lo:37	Hi:43 Me:41 Lo:38
	Outdoor			Cooling:48 Heating:50	Cooling:49 Heating:52	Cooling:48 Heating:50		Cooling:49 Heating:52
Sound power level*1	Outdoor		dB(A)	70	72	70	70	72
Air flow ※	Indoor		CMM	Hi:30 Me:27 Lo:23		Hi:27 Me:24 Lo:20	Hi:30 Me:27 Lo:23	
	Outdoor			100				
Indoor unit: Exterior dimensions	Height x Width x Depth		mm	Unit:298x840x840 Panel:35x950x950				
Indoor unit: Net weight	Unit+Panel		kg	32.5(Unit:27 Panel:5.5)				
Indoor unit: Panel				T-PSA-3BW-E				
Indoor unit: Air filter, Q'ty				Pocket Plastic net x1 (Washable)				
Indoor unit: Remote control(option)				Wired:RC-EX1A,RC-E5, RCH-E3 Wireless:RCN-T-36W-E				
Outdoor unit: Exterior dimensions	Height x Width x Depth		mm	1,300x970x370				
Outdoor unit: Net weight			kg	105				
Outdoor unit: Type of compressor				Rotary				
Outdoor unit: Ref.amount precharged			kg(m)	4.5(30)				
Outdoor unit: Ref.piping size	Liquid/Gas		ø	9.52/15.88				
Range of usage: Ref.piping length			m	100				
Range of usage: Vertical height difference	O/U is higher		m	30				
Range of usage: Vertical height difference	O/U is lower		m	15				
Operating temperature range	Cooling		O/U	-15~43*2				
Operating temperature range	Heating		O/U	-20~20				

The data are measured under the following conditions(ISO-T1).
Cooling:Indoor temp. of 27˚CDB, 19˚CWB, and outdoor temp. of 35˚CDB. Heating:Indoor temp. of 20˚CDB, and outdoor temp. of 7˚CDB, 6˚CWB.
*1 : Indicates the value in an anechoic chamber. During operation these values are somewhat higher due to ambient conditions.
*2 : If a cooling operation is conducted when the outdoor air temperature is –5˚C or lower, the outdoor unit should be installed at a place where it is not influenced by natural wind. If wind blows, the low pressure will drop and compressor frequency will increase, this will cause the capacity to drop and may cause the unit to break down.

※ Powerful-Hi can be selected. Sound level: 40/50ZJXVF 39dB, 60ZJXVF 46dB, 71VNXVF 46dB, 100/125/140VNXVF 51dB, 100/125/140VSXVF 51dB
Air flow: 40/50ZJXVF 20CMM, 60ZJXVF 28CMM, 71VNXVF 28CMM, 100/125/140VNXVF 37CMM, 100/125/140VSXVF 37CMM

CEILING CASSETTE -4way Compact (600 X 600mm)-

FDTC

A CLASS

R410A

Fits into standard 600 x 600 ceiling





FDTC 40/50/60VF

Remote control (Option)

Wired



RC-EX1A



RC-E5



RCH-E3

Wireless



RCN-TC-24W-ER

Point 1 Taking OA (Outside air) into inside

OA Spacer TC-OAS-E (option)
Joint Duct TC-OAD-E (option)

Utilizing OA spacer which comes as optional equipment, outside air can be taken into inside.

Using 1 joint duct:
OA comes up to 1.3m^3/min.
Using 2 joint ducts:
OA comes from 1.3 to 2.6m^3/min.

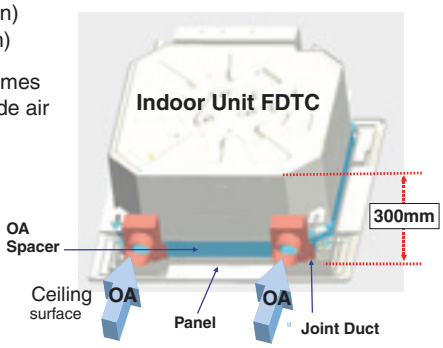

Point 2 Quiet operation

(Sound Pressure level in the Lo mode)

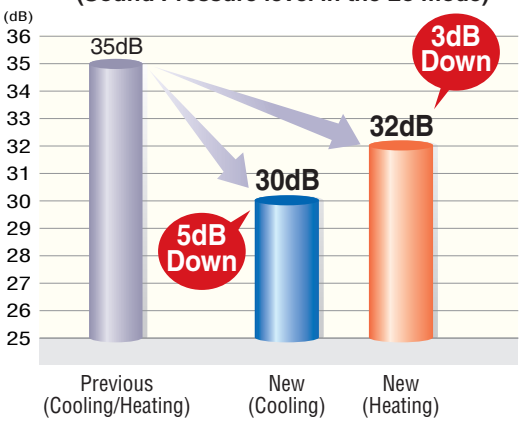

Point 3 "CLEARER" Air Flow

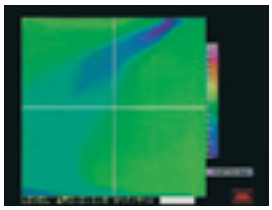

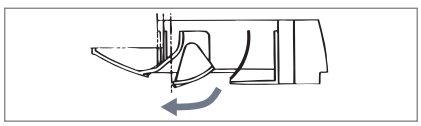

New shape & angled louver redirects the air current away from the ceiling, to reduce ceiling stains

Point 4 Installation Workability



For wireless control simply insert the infrared receiver kit on a corner of the panel



wireless remote control
RCN-TC-24W-ER

Point 5 Compact and Convenient

- **600mm Drain Pump**

Drain can be discharged upward by 600 mm from the ceiling surface close to the indoor unit.
It allows a piping layout with a high degree of freedom depending on the installation location.

- **600 x 600 ceiling**

Indoor unit size (W:570 x D:570) brings easy installation for 600 x 600 ceiling and Panel size (700 x 700) is suitable for 600 x 600 ceiling. Height is the industry's lowest height level 248mm and weight is 16.5kg only.

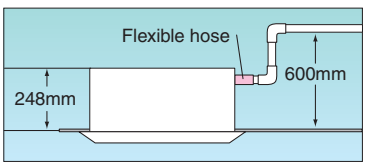

Outline drawing (Unit:mm)

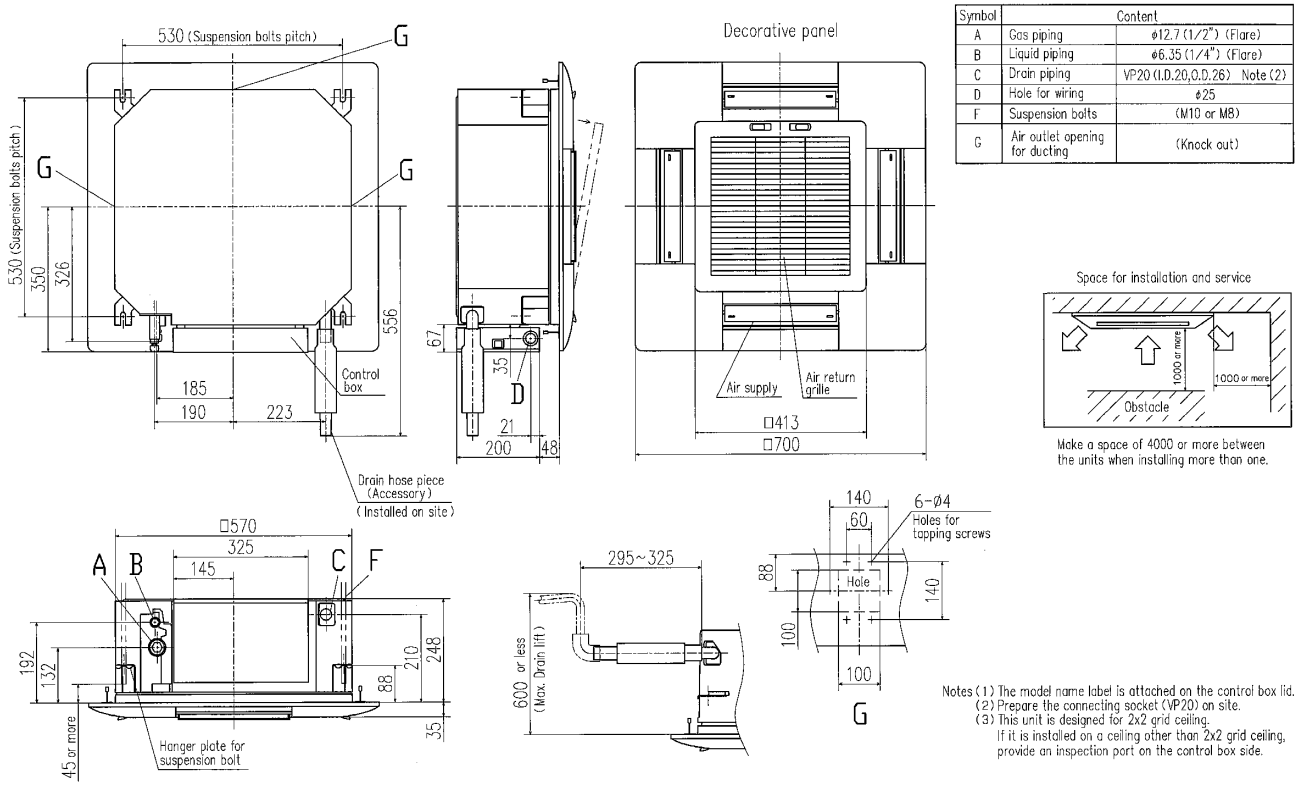

Symbol	Content	
A	Gas piping	ø12.7 (1/2") (Flare)
B	Liquid piping	ø6.35 (1/4") (Flare)
C	Drain piping	VP20 (I.D.20,O.D.26) Note (2)
D	Hole for wiring	ø25
F	Suspension bolts	(M10 or M8)
G	Air outlet opening for ducting	(Knock out)

Notes (1) The model name label is attached on the control box lid.
(2) Prepare the connecting socket (VP20) on site.
(3) This unit is designed for 2x2 grid ceiling.
If it is installed on a ceiling other than 2x2 grid ceiling, provide an inspection port on the control box side.

SPECIFICATIONS

				Hyper Inverter		
Set model name				FDTC40ZJXVF	FDTC50ZJXVF	FDTC60ZJXVF
Indoor name				FDTC40VF	FDTC50VF	FDTC60VF
Outdoor name				SRC40ZJX-S	SRC50ZJX-S	SRC60ZJX-S
Power source				1Phase 220-240V 50Hz, 1Phase 220V 60Hz		
Nominal cooling capacity (Min~Max)		ISO-T1(JIS)	kW	4.0 (1.1~4.7)	5.0 (1.1~5.6)	5.6 (1.1~6.3)
Nominal heating capacity (Min~Max)		ISO-T1(JIS)	kW	4.5 (0.6~5.4)	5.4 (0.6~6.3)	6.7 (0.6~6.7)
Power consumption		Cooling/Heating	kW	1.04/1.10	1.56/1.45	1.99/2.07
COP		Cooling/Heating		3.85/4.09	3.21/3.72	2.81/3.24
Energy label		Cooling/Heating		A/A	A/A	C/C
Inrush current (Max. running current)			A	5(12)	5(15)	
Sound pressure level*1 ※		Indoor	dB(A)	Cooling : Hi:42 Me:36 Lo:30 Heating : Hi:42 Me:36 Lo:32		Cooling : Hi:46 Me:39 Lo:30 Heating : Hi:46 Me:39 Lo:32
		Outdoor		50	Cooling : 54 Heating : 50	54
Sound power level*1		Outdoor	dB(A)	63	63	64
Air flow ※		Indoor	CMM	Cooling : Hi:11.5 Me:9 Lo:7 Heating : Hi:11.5 Me:9 Lo:8		Cooling : Hi:13.5 Me:10 Lo:7 Heating : Hi:13.5 Me:10 Lo:8
		Outdoor		Cooling : 36 Heating : 33	Cooling : 40 Heating : 33	Cooling : 41.5 Heating : 39
Indoor unit	Exterior dimensions	Height x Width x Depth	mm	Unit:248x570x570 Panel:35x700x700		
	Net weight	Unit+Panel	kg	18.5(Unit:15 Panel:3.5)		
	Panel			TC-PSA-25W-E		
	Air filter, Q'ty			Pocket Plastic net x1 (Washable)		
	Remote control(option)			Wired:RC-EX1A, RC-E5, RCH-E3 Wireless:RCN-TC-24W-ER		
Outdoor unit	Exterior dimensions	Height x Width x Depth	mm	640x800(+71)x290		
	Net weight		kg	45		
	Type of compressor			Rotary		
	Ref.amount precharged		kg(m)	1.5(15)		
	Ref.piping size	Liquid/Gas	ø	6.35/12.7		
Range of usage	Ref.piping length		m	30		
	Vertical height difference	O/U is higher	m	20		
		O/U is lower	m	20		
Operating temperature range		Cooling	O/U	-15~43*2		
		Heating	O/U	-15~20		

The data are measured under the following conditions(ISO-T1).
Cooling:Indoor temp. of 27˚CDB, 19˚CWB, and outdoor temp. of 35˚CDB. Heating:Indoor temp. of 20˚CDB, and outdoor temp. of 7˚CDB, 6˚CWB.
*1 : Indicates the value in an anechoic chamber. During operation these values are somewhat higher due to ambient conditions.
*2 : If a cooling operation is conducted when the outdoor air temperature is –5˚C or lower, the outdoor unit should be installed at a place where it is not influenced by natural wind. If wind blows, the low pressure will drop and compressor frequency will increase, this will cause the capacity to drop and may cause the unit to break down.

※ Powerful-Hi can be selected. Sound level: 40/50/60ZJXVF 47dB Air flow: 40/50/60ZJXVF 13.5CMM

DUCT CONNECTED -High Static pressure-

FDU

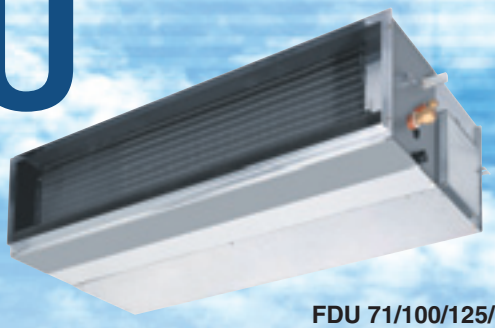

FDU 71/100/125/140VD

A CLASS

R410A

Remote control (Option)

Wired Wireless



RC-EX1A RC-E5 RCH-E3 RCN-KIT3-E

Enhanced installation workability

Quiet, Lightweight and Compact

With the FDU71, the noise level is only 37dB (low), weight is only 40kg and height is only 297mm.
In addition 600mm Drain Pump is mounted in FDU71/100/125/140VD.
The indoor unit is completely hidden in the ceiling, so this is suitable for spaces with classy interior decoration.

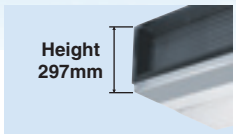

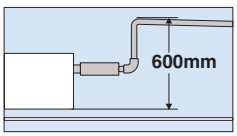



Outline drawing (Unit:mm)

Model FDU71VD

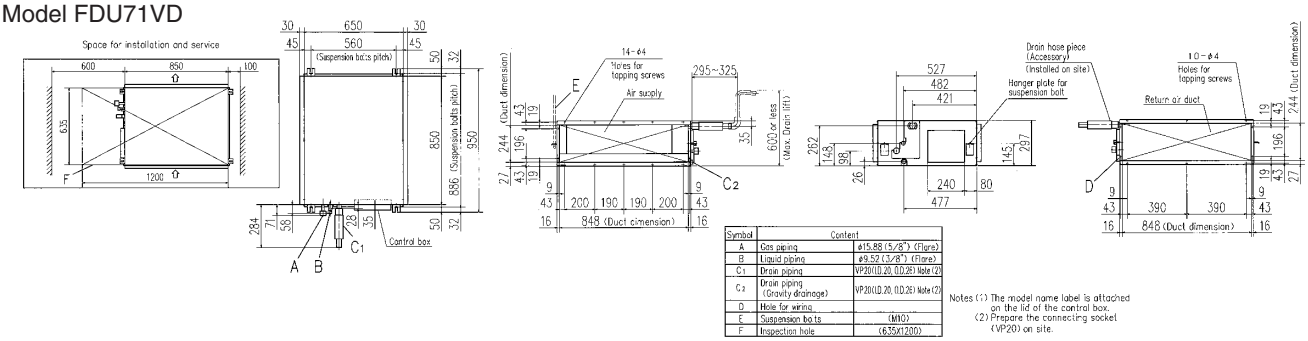

Symbol	Content	
A	Gas piping	φ15.88 (5/8") (Flare)
B	Liquid piping	φ9.52 (3/8") (Flare)
C1	Drain piping	VP20(I.D.20, O.D.26) Note (2)
C2	Drain piping (Gravity drainage)	VP20(I.D.20, O.D.26) Note (2)
D	Hole for wiring	
E	Suspension bolts	(M10)
F	Inspection hole	(635X1200)

Notes (1) The model name label is attached on the lid of the control box.
(2) Prepare the connecting socket (VP20) on site.

Models FDU100,125,140VD

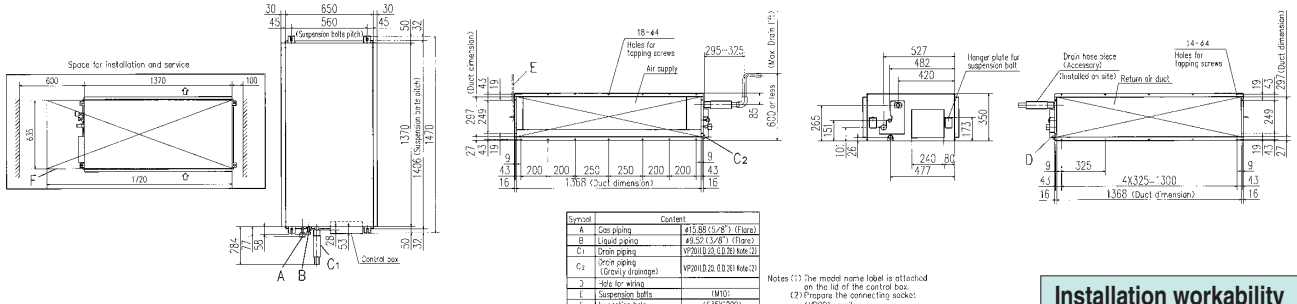

Symbol	Content	
A	Gas piping	φ15.88 (5/8") (Flare)
B	Liquid piping	φ9.52 (3/8") (Flare)
C1	Drain piping	VP20(I.D.20, O.D.26) Note (2)
C2	Drain piping (Gravity drainage)	VP20(I.D.20, O.D.26) Note (2)
D	Hole for wiring	
E	Suspension bolts	(M10)
F	Inspection hole	(635X1200)

Notes (1) The model name label is attached on the lid of the control box.
(2) Prepare the connecting socket (VP20) on site.

Models FDU200,250VF (Micro inverter only, *Refer to P23)

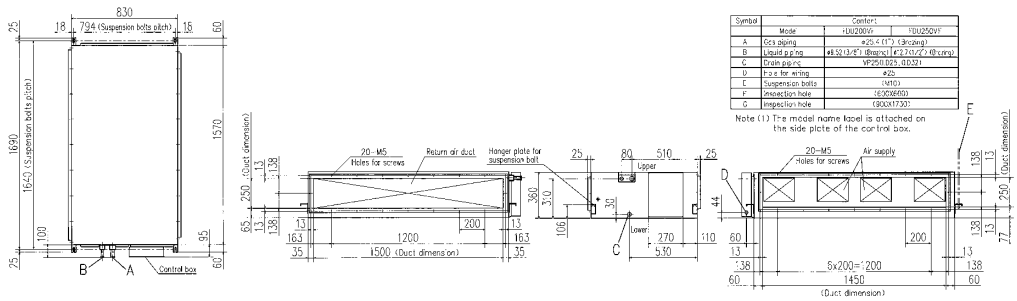

Symbol	Mode	Content: FDU200VF	FDU250VF
A	Gas piping	φ25.4 (1") (Brazing)	
B	Liquid piping	φ9.52 (3/8") (Brazing)	φ12.7 (1/2") (Brazing)
C	Drain piping	VP25(I.D.25, O.D.32)	
D	Hole for wiring	φ22	
E	Suspension bolts	(M10)	
F	Inspection hole	1630X660	
G	Inspection hole	(300X1730)	

Note (1) The model name label is attached on the side plate of the control box.

Installation workability (FDU200,250VF)

Using piping attachment that has flared connection and brazed connection ends, there is no need conduct brazing work inside the outdoor unit.

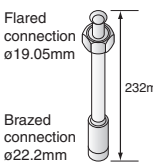

SPECIFICATIONS

*Not available in 60Hz

				Hyper Inverter			
Set model name				*FDU71VNXVD	*FDU100VNXVD	*FDU125VNXVD	*FDU140VNXVD
Indoor name				FDU71VD	FDU100VD	FDU125VD	FDU140VD
Outdoor name				FDC71VNX	FDC100VNX	FDC125VNX	FDC140VNX
Power source				1Phase 220-240V 50Hz			
Nominal cooling capacity (Min~Max)		ISO-T1(JIS)	kW	7.1 (3.2~8.0)	10.0 (4.0~11.2)	12.5 (5.0~14.0)	14.0 (5.0~16.0)
Nominal heating capacity (Min~Max)		ISO-T1(JIS)	kW	8.0 (3.6~9.0)	11.2 (4.0~12.5)	14.0 (4.0~17.0)	16.0 (4.0~18.0)
Power consumption		Cooling/Heating	kW	2.15/2.15	2.78/2.90	3.44/3.67	4.20/4.30
COP		Cooling/Heating		3.30/3.72	3.60/3.86	3.63/3.81	3.33/3.72
Energy label		Cooling/Heating		A/A	A/A	A/A	A/A
Inrush current (Max. running current)			A	5(17)	5(25)	5(29)	5(30)
Sound pressure level*1		Indoor	dB(A)	Hi:41 Lo:37	Hi:42 Lo:37	Hi:43 Lo:38	
		Outdoor		Cooling:51 Heating:48	Cooling:48 Heating:50		Cooling:49 Heating:52
Sound power level*1		Outdoor	dB(A)	66	70	70	72
Air flow		Indoor	CMM	Hi:20 Lo:17	Hi:34 Lo:27	Hi:42 Lo:33.5	
		Outdoor		Cooling:60 Heating:50	100		
External static pressure			Pa	Standard:60, Max:130			
Indoor unit	Exterior dimensions	Height x Width x Depth	mm	297x850x650	350x1,370x650		
Indoor unit	Net weight		kg	40	63		
Indoor unit	Air filter, Q'ty			Procure locally			
Indoor unit	Remote control(option)			Wired:RC-EX1A, RC-E5, RCH-E3 Wireless:RCN-KIT3-E			
Outdoor unit	Exterior dimensions	Height x Width x Depth	mm	750x880(+88)x340	1,300x970x370		
Outdoor unit	Net weight		kg	60	105		
Outdoor unit	Type of compressor			Rotary			
Outdoor unit	Ref.amount precharged		kg(m)	2.95(30)	4.5(30)		
Outdoor unit	Ref.piping size	Liquid/Gas	ø	9.52/15.88			
Range of usage	Ref.piping length		m	50	100		
Range of usage	Vertical height difference	O/U is higher	m	30			
Range of usage	Vertical height difference	O/U is lower	m	15			
Operating temperature range		Cooling	O/U	-15~43*2			
Operating temperature range		Heating	O/U	-20~20			

SPECIFICATIONS

*Not available in 60Hz

				Hyper Inverter		
Set model name				*FDU100VSXVD	*FDU125VSXVD	*FDU140VSXVD
Indoor name				FDU100VD	FDU125VD	FDU140VD
Outdoor name				FDC100VSX	FDC125VSX	FDC140VSX
Power source				3Phase 380-415V 50Hz		
Nominal cooling capacity (Min~Max)		ISO-T1(JIS)	kW	10.0 (4.0~11.2)	12.5 (5.0~14.0)	14.0 (5.0~16.0)
Nominal heating capacity (Min~Max)		ISO-T1(JIS)	kW	11.2 (4.0~16.0)	14.0 (4.0~18.0)	16.0 (4.0~20.0)
Power consumption		Cooling/Heating	kW	2.78/2.90	3.44/3.67	4.20/4.30
COP		Cooling/Heating		3.60/3.86	3.63/3.81	3.33/3.72
Energy label		Cooling/Heating		A/A	A/A	A/A
Inrush current (Max. running current)			A	5(16)	5(18)	5(19)
Sound pressure level*1		Indoor	dB(A)	Hi:42 Lo:37	Hi:43 Lo:38	
		Outdoor		Cooling:48 Heating:50	Cooling:48 Heating:50	Cooling:49 Heating:52
Sound power level*1		Outdoor	dB(A)	70	70	72
Air flow		Indoor	CMM	Hi:34 Lo:27	Hi:42 Lo:33.5	
		Outdoor		100		
External static pressure			Pa	Standard:60, Max:130		
Indoor unit	Exterior dimensions	Height x Width x Depth	mm	350x1,370x650		
Indoor unit	Net weight		kg	63		
Indoor unit	Air filter, Q'ty			Procure locally		
Indoor unit	Remote control(option)			Wired:RC-EX1A, RC-E5, RCH-E3 Wireless:RCN-KIT3-E		
Outdoor unit	Exterior dimensions	Height x Width x Depth	mm	1,300x970x370		
Outdoor unit	Net weight		kg	105		
Outdoor unit	Type of compressor			Rotary		
Outdoor unit	Ref.amount precharged		kg(m)	4.5(30)		
Outdoor unit	Ref.piping size	Liquid/Gas	ø	9.52/15.88		
Range of usage	Ref.piping length		m	100		
Range of usage	Vertical height difference	O/U is higher	m	30		
Range of usage	Vertical height difference	O/U is lower	m	15		
Operating temperature range		Cooling	O/U	-15~43*2		
Operating temperature range		Heating	O/U	-20~20		

The data are measured under the following conditions(ISO-T1).
Cooling:Indoor temp. of 27˚CDB, 19˚CWB, and outdoor temp. of 35˚CDB. Heating:Indoor temp. of 20˚CDB, and outdoor temp. of 7˚CDB, 6˚CWB. External static pressure of FDU71/100/125/140 is 60Pa.

*1 : Indicates the value in an anechoic chamber. During operation these values are somewhat higher due to ambient conditions.

*2 : External static pressure is changeable to be set by the remote control. Standard external static pressure is factory setting. MAX external static pressure is "High static pressure" setting. The values of sound pressure level become 5dB(A) higher at eternal static pressure of 130Pa.

*3 : If a cooling operation is conducted when the outdoor air temperature is –5˚C or lower, the outdoor unit should be installed at a place where it is not influenced by natural wind. If wind blows, the low pressure will drop and compressor frequency will increase, this will cause the capacity to drop and may cause the unit to break down.

DUCT CONNECTED -Middle Static pressure-

FDUM

NEW





FDUM 50/60/71/
100/125/140VF

Filter kit (option)
UM-FL1EF : for 50
UM-FL2EF : for 60, 71
UM-FL3EF : for 100, 125, 140
external static pressure loss:5pa

Remote control (Option)

Wired



RC-EX1A RC-E5 RCH-E3

Wireless



RCN-KIT3-E

Point 1 Thin design

The height of all FDUM models is only 280mm.

70mm less
H 350
H 280



FDUM100/125/140VF

19mm less
H 299
H 280



FDUM50/60/71VF

Outline drawing(Unit:mm)

Model FDUM50VF

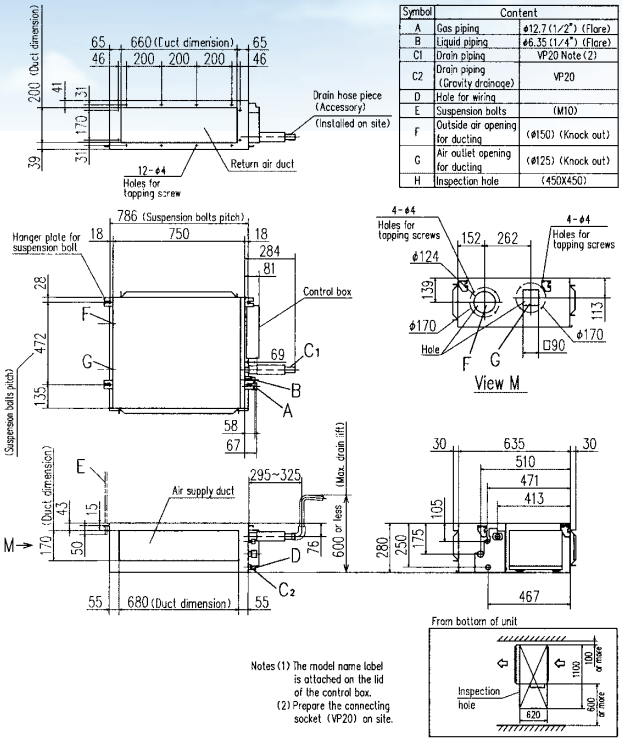

Symbol	Content	
A	Gas piping	ϕ12.7 (1/2") (Flare)
B	Liquid piping	ϕ6.35 (1/4") (Flare)
C1	Drain piping	VP20 Note (2)
C2	Drain piping (Gravity drainage)	VP20
D	Hole for wiring	
E	Suspension bolts	(M10)
F	Outside air opening for ducting	(ϕ150) (Knock out)
G	Air outlet opening for ducting	(ϕ125) (Knock out)
H	Inspection hole	(450X450)

Notes (1) The model name label is attached on the lid of the control box.
(2) Prepare the connecting socket (VP20) on site.

Models FDUM60,71VF

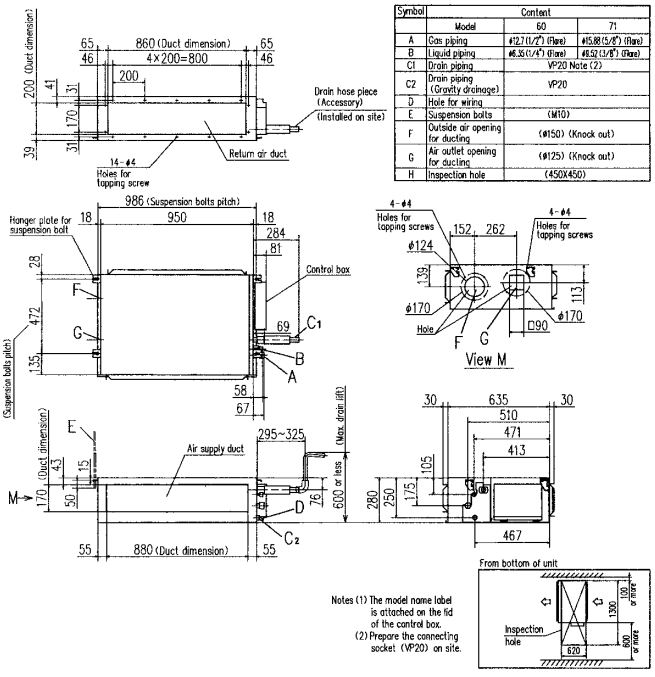

Symbol	Content		
	Model	60	71
A	Gas piping	ϕ12.7 (1/2") (Flare)	ϕ15.88 (5/8") (Flare)
B	Liquid piping	ϕ6.35 (1/4") (Flare)	ϕ9.52 (3/8") (Flare)
C1	Drain piping	VP20 Note (2)	
C2	Drain piping (Gravity drainage)	VP20	
D	Hole for wiring		
E	Suspension bolts	(M10)	
F	Outside air opening for ducting	(ϕ150) (Knock out)	
G	Air outlet opening for ducting	(ϕ125) (Knock out)	
H	Inspection hole	(450X450)	

Notes (1) The model name label is attached on the lid of the control box.
(2) Prepare the connecting socket (VP20) on site.

Models FDUM100,125,140VF

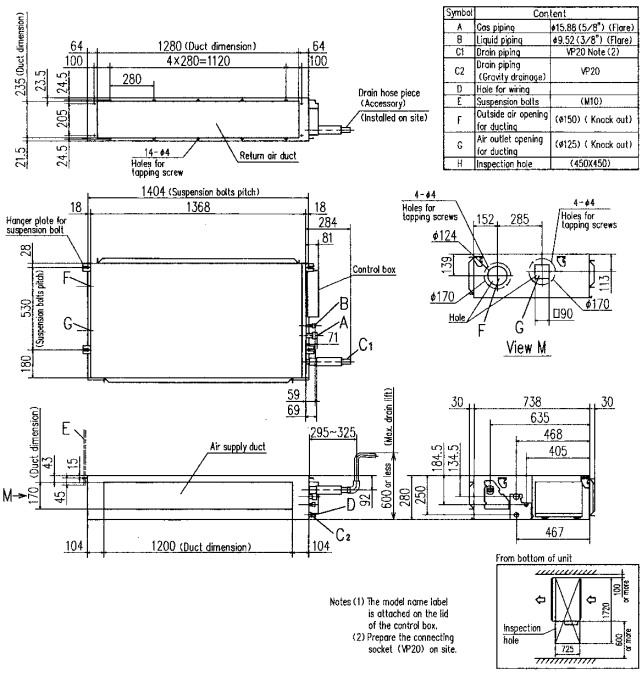

Symbol	Content	
A	Gas piping	ϕ15.88 (5/8") (Flare)
B	Liquid piping	ϕ9.52 (3/8") (Flare)
C1	Drain piping	VP20 Note (2)
C2	Drain piping (Gravity drainage)	VP20
D	Hole for wiring	
E	Suspension bolts	(M10)
F	Outside air opening for ducting	(ϕ150) (Knock out)
G	Air outlet opening for ducting	(ϕ125) (Knock out)
H	Inspection hole	(450X450)

Notes (1) The model name label is attached on the lid of the control box.
(2) Prepare the connecting socket (VP20) on site.

SPECIFICATIONS

				Hyper Inverter			
Set model name				**FDUM50ZJXVF**	**FDUM60ZJXVF**	**FDUM71VNXVF**	**FDUM100VNXVF**
Indoor name				FDUM50VF	FDUM60VF	FDUM71VF	FDUM100VF
Outdoor name				SRC50ZJX-S	SRC60ZJX-S	FDC71VNX	FDC100VNX
Power source				1Phase 220-240V 50Hz, 1Phase 220V 60Hz			
Nominal cooling capacity (Min~Max)	ISO-T1(JIS)		kW	5.0 (2.2~5.6)	5.6 (2.8~6.3)	7.1 (3.2~8.0)	10.0 (4.0~11.2)
Nominal heating capacity (Min~Max)	ISO-T1(JIS)		kW	5.4 (0.6~6.3)	6.7 (0.6~7.1)	8.0 (3.6~9.0)	11.2 (4.0~12.5)
Power consumption	Cooling/Heating		kW	1.38/1.45	1.54/1.75	2.03/1.99	2.68/3.02
COP	Cooling/Heating			3.62/3.72	3.64/3.83	3.50/4.02	3.73/3.71
Energy label	Cooling/Heating			A/A	A/A	A/A	A/A
Inrush current (Max. running current)			A	5(15)		5(17)	5(24)
Sound pressure level*1 ※	Indoor		dB(A)	Hi:32 Me:29 Lo:26	Hi:31 Me:28 Lo:25	Hi:33 Me:29 Lo:25	Hi:38 Me:36 Lo:30
	Outdoor			Cooling:54 Heating:50	54	Cooling:51 Heating:48	Cooling:48 Heating:50
Sound power level*1	Outdoor		dB(A)	63	64	66	70
Air flow ※	Indoor		CMM	Hi:10 Me:9 Lo:8	Hi:15 Me:13 Lo:10	Hi:19 Me:15 Lo:10	Hi:28 Me:25 Lo:19
	Outdoor			Cooling:40 Heating:33	Cooling:41.5 Heating:39	Cooling:60 Heating:50	100
External static pressure	50Hz/60Hz		Pa	Standard:35, Max:100			Standard:60, Max:100
Indoor unit: Exterior dimensions	Height x Width x Depth		mm	280x750x635	280x950x635		280x1,370x740
Indoor unit: Net weight			kg	29	34		54
Indoor unit: Air filter, Q'ty				Procure locally			
Indoor unit: Remote control(option)				Wired:RC-EX1A, RC-E5, RCH-E3 Wireless:RCN-KIT3-E			
Outdoor unit: Exterior dimensions	Height x Width x Depth		mm	640x800(+71)x290		750x880(+88)x340	1,300x970x370
Outdoor unit: Net weight			kg	45		60	105
Outdoor unit: Type of compressor				Rotary		Rotary	
Outdoor unit: Ref.amount precharged			kg(m)	1.5(15)		2.95(30)	4.5(30)
Outdoor unit: Ref.piping size	Liquid/Gas		ø	6.35/12.7		9.52/15.88	
Range of usage: Ref.piping length			m	30		50	100
Range of usage: Vertical height difference	O/U is higher		m	20		30	
Range of usage: Vertical height difference	O/U is lower		m	20		15	
Operating temperature range	Cooling		O/U	-15~43*2			
Operating temperature range	Heating		O/U	-15~20		-20~20	

SPECIFICATIONS

				Hyper Inverter				
Set model name				**FDUM125VNXVF**	**FDUM140VNXVF**	**FDUM100VSXVF**	**FDUM125VSXVF**	**FDUM140VSXVF**
Indoor name				FDUM125VF	FDUM140VF	FDUM100VF	FDUM125VF	FDUM140VF
Outdoor name				FDC125VNX	FDC140VNX	FDC100VSX	FDC125VSX	FDC140VSX
Power source				1Phase 220-240V 50Hz, 1Phase 220V 60Hz		3Phase 380-415V 50Hz, 3Phase 380V 60Hz		
Nominal cooling capacity (Min~Max)	ISO-T1(JIS)		kW	12.5 (5.0~14.0)	14.0 (5.0~14.5)	10.0 (4.0~11.2)	12.5 (5.0~14.0)	14.0 (5.0~14.5)
Nominal heating capacity (Min~Max)	ISO-T1(JIS)		kW	14.0 (4.0~17.0)	16.0 (4.0~18.0)	11.2 (4.0~16.0)	14.0 (4.0~18.0)	16.0 (4.0~20.0)
Power consumption	Cooling/Heating		kW	3.49/3.77	4.28/4.42	2.68/3.02	3.49/3.77	4.28/4.42
COP	Cooling/Heating			3.58/3.71	3.27/3.62	3.73/3.71	3.58/3.71	3.27/3.62
Energy label	Cooling/Heating			A/A	A/A	A/A	A/A	A/A
Inrush current (Max. running current)			A	5(26)		5(15)		
Sound pressure level*1 ※	Indoor		dB(A)	Hi:40 Me:34 Lo:29	Hi:40 Me:35 Lo:30	Hi:38 Me:36 Lo:30	Hi:40 Me:34 Lo:29	Hi:40 Me:35 Lo:30
	Outdoor			Cooling:48 Heating:50	Cooling:49 Heating:52	Cooling:48 Heating:50		Cooling:49 Heating:52
Sound power level*1	Outdoor		dB(A)	70	72	70	70	72
Air flow ※	Indoor		CMM	Hi:32 Me:26 Lo:20	Hi:35 Me:28 Lo:22	Hi:28 Me:25 Lo:19	Hi:32 Me:26 Lo:20	Hi:35 Me:28 Lo:22
	Outdoor			100				
External static pressure	50Hz/60Hz		Pa	Standard:60, Max:100		Standard:60, Max:100	Standard:60, Max:100	
Indoor unit: Exterior dimensions	Height x Width x Depth		mm	280x1,370x740				
Indoor unit: Net weight			kg	54				
Indoor unit: Air filter, Q'ty				Procure locally				
Indoor unit: Remote control(option)				Wired:RC-EX1A, RC-E5, RCH-E3 Wireless:RCN-KIT3-E				
Outdoor unit: Exterior dimensions	Height x Width x Depth		mm	1,300x970x370				
Outdoor unit: Net weight			kg	105				
Outdoor unit: Type of compressor				Rotary				
Outdoor unit: Ref.amount precharged			kg(m)	4.5(30)				
Outdoor unit: Ref.piping size	Liquid/Gas		ø	9.52/15.88				
Range of usage: Ref.piping length			m	100				
Range of usage: Vertical height difference	O/U is higher		m	30				
Range of usage: Vertical height difference	O/U is lower		m	15				
Operating temperature range	Cooling		O/U	-15~43*2				
Operating temperature range	Heating		O/U	-20~20				

The data are measured under the following conditions(ISO-T1).
Cooling:Indoor temp. of 27˚CDB, 19˚CWB, and outdoor temp. of 35˚CDB. Heating:Indoor temp. of 20˚CDB, and outdoor temp. of 7˚CDB, 6˚CWB. External static pressure of indoor units is 60Pa.

*1 : Indicates the value in an anechoic chamber. During operation these values are somewhat higher due to ambient conditions.

*2 : If a cooling operation is conducted when the outdoor air temperature is –5˚C or lower, the outdoor unit should be installed at a place where it is not influenced by natural wind. If wind blows, the low pressure will drop and compressor frequency will increase, this will cause the capacity to drop and may cause the unit to break down.

※ Powerful-Hi can be selected. Sound level: 50ZJXVF 37dB, 60ZJXVF 36dB, 71VNXVF 38dB, 100VN(S)XVF 44dB, 125VN(S)XVF 45dB, 140VN(S)XVF 47dB
Air flow: 50ZJXVF 13CMM, 60ZJXVF 20CMM, 71VNXVF 24CMM, 100VN(S)XVF 36CMM, 125VN(S)XVF 39CMM, 140VN(S)XVF 48CMM

CEILING SUSPENDED
FDEN





FDEN 40/50/60/71/100/125/140VF

Remote control (Option)

Wired



RC-EX1A



RC-E5



RCH-E3

Wireless



RCN-E1R

Point 1 Improved installation workability

Increased freedom of a piping layout



The refrigerant pipe from the unit can be arranged in three directions, rear, right and up. The drain pipe can be arranged in two directions, left and right. This will allow a free layout of piping for various installation conditions. The unit can only be serviced from the bottom.

Point 2 Compact and modern design



All models fit compactly on ceiling. (Height-210mm or 250mm). Plain, modern design featuring rounded edges gives room a comfortable atmosphere.
FDEN40VF, 50VF weights 30kg the lightest level in the industry. Convenient and quick installation.

Outline drawing (Unit:mm)

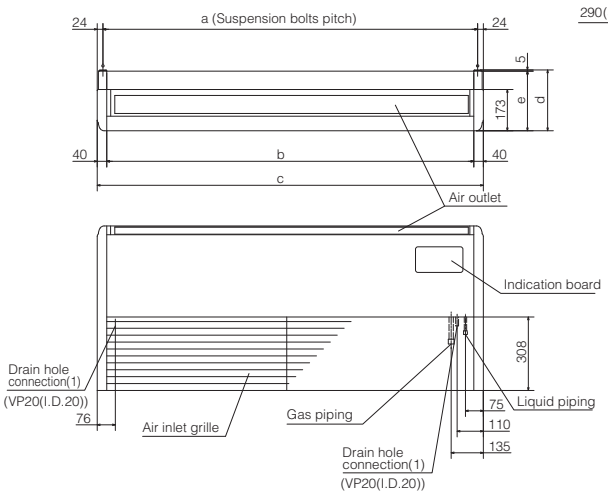

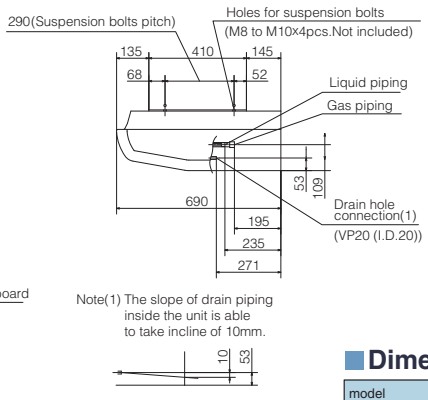

Note(1) The slope of drain piping inside the unit is able to take incline of 10mm.

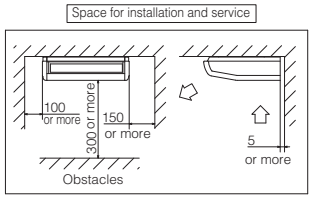

Dimension Table

model	a	b	c	d	e
FDEN40,50	1022	990	1070	215	210
FDEN60,71	1272	1240	1320	215	210
FDEN100~140	1572	1540	1620	255	250

SPECIFICATIONS

				Hyper Inverter				
Set model name				FDEN40ZJXVF	FDEN50ZJXVF	FDEN60ZJXVF	FDEN71VNXVF	FDEN100VNXVF
Indoor name				FDEN40VF	FDEN50VF	FDEN60VF	FDEN71VF	FDEN100VF
Outdoor name				SRC40ZJX-S	SRC50ZJX-S	SRC60ZJX-S	FDC71VNX	FDC100VNX
Power source				1Phase 220-240V 50Hz, 1Phase 220V 60Hz				
Nominal cooling capacity (Min~Max)	ISO-T1(JIS)		kW	4.0 (1.1~4.7)	5.0 (1.1~5.6)	5.6 (1.1~6.3)	7.1 (3.2~8.0)	10.0 (4.0~11.2)
Nominal heating capacity (Min~Max)	ISO-T1(JIS)		kW	4.5 (0.6~5.4)	5.4 (0.6~6.3)	6.7 (0.6~7.1)	8.0 (3.6~9.0)	11.2 (4.0~12.5)
Power consumption	Cooling/Heating		kW	1.02/1.10	1.53/1.46	1.78/1.87	2.11/2.11	2.80/2.88
COP	Cooling/Heating			3.92/4.09	3.27/3.70	3.15/3.58	3.36/3.79	3.57/3.89
Energy label	Cooling/Heating			A/A	A/A	B/B	A/A	A/A
Inrush current (Max. running current)			A	5(12)	5(14)		5(17)	5(24)
Sound pressure level*1 ※	Indoor		dB(A)	Hi:39 Me:38 Lo:37		Hi:41 Me:39 Lo:38		Hi:44 Me:41 Lo:39
	Outdoor			50	Cooling:54 Heating:50	54	Cooling:51 Heating:48	Cooling:48 Heating:50
Sound power level*1	Outdoor		dB(A)	63	63	64	66	70
Air flow ※	Indoor		CMM	Hi:10 Me:9 Lo:7		Hi:16 Me:14 Lo:12	Hi:16 Me:14 Lo:12	Hi:26 Me:23 Lo:21
	Outdoor			Cooling:36 Heating:33	Cooling:40 Heating:33	Cooling:41.5 Heating:39	Cooling:60 Heating:50	100
Indoor unit	Exterior dimensions	Height x Width x Depth	mm	210x1,070x690		210x1,320x690		250x1,620x690
	Net weight		kg	28		37		49
	Air filter, Q'ty			Pocket Plastic net x2 (Washable)				
	Remote control(option)			Wired:RC-EX1A, RC-E5, RCH-E3 Wireless:RCN-E1R				
Outdoor unit	Exterior dimensions	Height x Width x Depth	mm	640x800(+71)x290			750x880(+88)x340	1,300x970x370
	Net weight		kg	45			60	105
	Type of compressor			Rotary			Rotary	
	Ref.amount precharged		kg(m)	1.5(15)			2.95(30)	4.5(30)
	Ref.piping size	Liquid/Gas	ø	6.35/12.7			9.52/15.88	
Range of usage	Ref.piping length		m	30			50	100
	Vertical height difference	O/U is higher	m	20			30	
		O/U is lower	m	20			15	
Operating temperature range	Cooling		O/U	-15~43*2				
	Heating		O/U	-15~20			-20~20	

SPECIFICATIONS

				Hyper Inverter				
Set model name				FDEN125VNXVF	FDEN140VNXVF	FDEN100VSXVF	FDEN125VSXVF	FDEN140VSXVF
Indoor name				FDEN125VF	FDEN140VF	FDEN100VF	FDEN125VF	FDEN140VF
Outdoor name				FDC125VNX	FDC140VNX	FDC100VSX	FDC125VSX	FDC140VSX
Power source				1Phase 220-240V 50Hz, 1Phase 220V 60Hz		3Phase 380-415V 50Hz, 3Phase 380V 60Hz		
Nominal cooling capacity (Min~Max)	ISO-T1(JIS)		kW	12.5 (5.0~14.0)	14.0 (5.0~16.0)	10.0 (4.0~11.2)	12.5 (5.0~14.0)	14.0 (5.0~16.0)
Nominal heating capacity (Min~Max)	ISO-T1(JIS)		kW	14.0 (4.0~17.0)	16.0 (4.0~18.0)	11.2 (4.0~16.0)	14.0 (4.0~18.0)	16.0 (4.0~20.0)
Power consumption	Cooling/Heating		kW	3.86/3.77	4.98/4.69	2.80/2.88	3.86/3.77	4.98/4.69
COP	Cooling/Heating			3.24/3.71	2.81/3.41	3.57/3.89	3.24/3.71	2.81/3.41
Energy label	Cooling/Heating			A/A	C/B	A/A	A/A	C/B
Inrush current (Max. running current)			A	5(26)		5(15)		
Sound pressure level*1 ※	Indoor		dB(A)	Hi:46 Me:44 Lo:43		Hi:44 Me:41 Lo:39	Hi:46 Me:44 Lo:43	
	Outdoor			Cooling:48 Heating:50	Cooling:49 Heating:52	Cooling:48 Heating:50	Cooling:48 Heating:50	Cooling:49 Heating:52
Sound power level*1	Outdoor		dB(A)	70	72	70	70	72
Air flow ※	Indoor		CMM	Hi:29 Me:26 Lo:23		Hi:26 Me:23 Lo:21	Hi:29 Me:26 Lo:23	
	Outdoor			100				
Indoor unit	Exterior dimensions	Height x Width x Depth	mm	250x1,620x690				
	Net weight		kg	49				
	Air filter, Q'ty			Pocket Plastic net x2 (Washable)				
	Remote control(option)			Wired:RC-EX1A, RC-E5, RCH-E3 Wireless:RCN-E1R				
Outdoor unit	Exterior dimensions	Height x Width x Depth	mm	1,300x970x370				
	Net weight		kg	105				
	Type of compressor			Rotary				
	Ref.amount precharged		kg(m)	4.5(30)				
	Ref.piping size	Liquid/Gas	ø	9.52/15.88				
Range of usage	Ref.piping length		m	100				
	Vertical height difference	O/U is higher	m	30				
		O/U is lower	m	15				
Operating temperature range	Cooling		O/U	-15~43*2				
	Heating		O/U	-20~20				

The data are measured under the following conditions(ISO-T1).
Cooling:Indoor temp. of 27˚CDB, 19˚CWB, and outdoor temp. of 35˚CDB.
Heating:Indoor temp. of 20˚CDB, and outdoor temp. of 7˚CDB, 6˚CWB.
*1 : Indicates the value in an anechoic chamber. During operation these values are somewhat higher due to ambient conditions.
*2 : If a cooling operation is conducted when the outdoor air temperature is –5˚C or lower, the outdoor unit should be installed at a place where it is not influenced by natural wind. If wind blows, the low pressure will drop and compressor frequency will increase, this will cause the capacity to drop and may cause the unit to break down.

※ Powerful-Hi can be selected. Sound level: 40/50ZJXVF 46dB, 60ZJXVF 48dB, 71VNXVF 50dB, 100VNXVF 46dB, 125/140VNXVF 50dB, 100VSXVF 46dB, 125/140VSXVF 50dB
Air flow: 40/50ZJXVF 13CMM, 60ZJXVF 22CMM, 71VNXVF 22CMM, 100VNXVF 28CMM, 125/140VNXVF 32CMM, 100VSXVF 28CMM, 125/140VSXVF 32CMM

FLOOR STANDING
FDF



FDF 71/100/125/140VD

Wireless remote control (Option)



RCN-KIT3-E

Point 1 Wide and powerful air flow

Wide and powerful air flow increase your comfort, realizing high efficiency in combination with our highly advanced outdoor units.

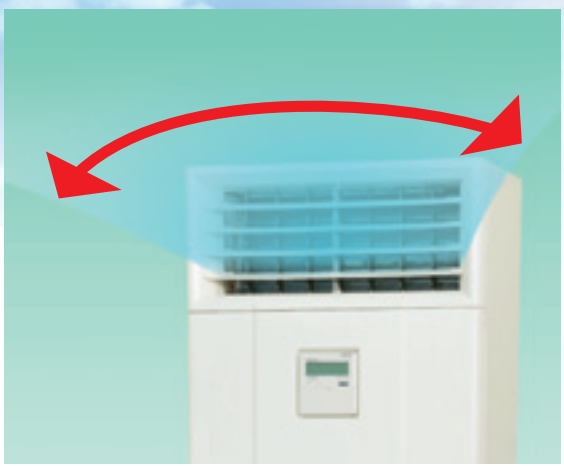

Point 2 Easy Transportation and Installation workability

Piping and drain hose connection can be selected out of 4-directions and the selection makes installation workability more effective.
Due to slim design (Depth: 320mm), easy transportation and installation are realized.

Easy Maintenance

The surface of heat exchanger can be appeared only removing the front panel. Easy cleaning of heat exchanger is possible.

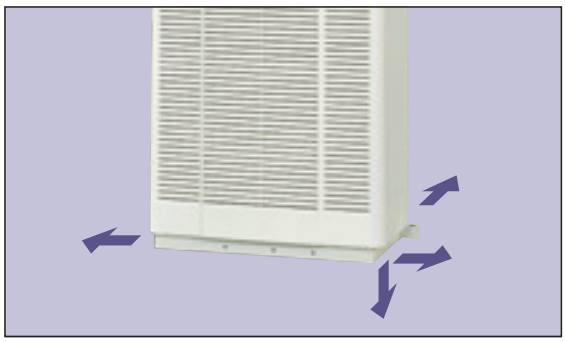

Outline drawing (Unit:mm)

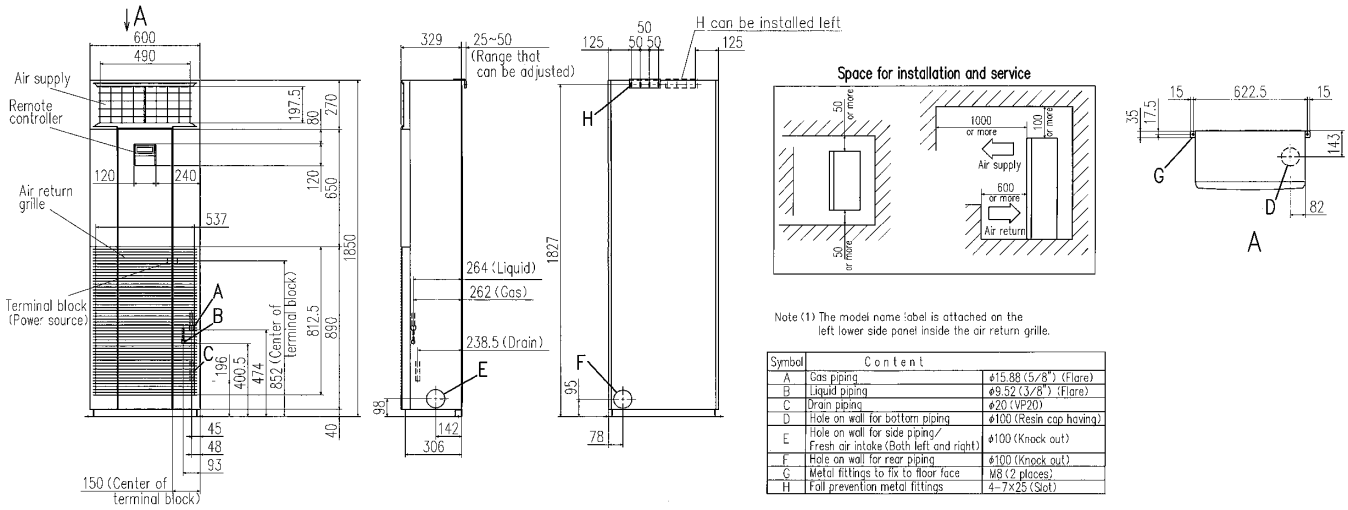

Note (1) The model name label is attached on the left lower side panel inside the air return grille.

Symbol	Content	
A	Gas piping	ø15.88 (5/8") (Flare)
B	Liquid piping	ø9.52 (3/8") (Flare)
C	Drain piping	ø20 (VP20)
D	Hole on wall for bottom piping	ø100 (Resin cap having)
E	Hole on wall for side piping/ Fresh air intake (Both left and right)	ø100 (Knock out)
F	Hole on wall for rear piping	ø100 (Knock out)
G	Metal fittings to fix to floor face	M8 (2 places)
H	Fall prevention metal fittings	4-7×25 (Slot)

SPECIFICATIONS

				Hyper Inverter			
Set model name				**FDF71VNXVD**	**FDF100VNXVD**	**FDF125VNXVD**	**FDF140VNXVD**
Indoor name				FDF71VD	FDF100VD	FDF125VD	FDF140VD
Outdoor name				FDC71VNX	FDC100VNX	FDC125VNX	FDC140VNX
Power source				1 Phase 220-240 50Hz, 1Phase 220V 60Hz			
Nominal cooling capacity (Min~Max)	ISO-T1(JIS)		kW	7.1 (3.2~8.0)	10.0 (4.0~11.2)	12.5 (5.0~14.0)	14.0 (5.0~16.0)
Nominal heating capacity (Min~Max)	ISO-T1(JIS)		kW	8.0 (3.6~9.0)	11.2 (4.0~12.5)	14.0 (4.0~17.0)	16.0 (4.0~18.0)
Power consumption	Cooling/Heating		kW	2.21/2.21	2.83/3.04	3.89/3.88	4.65/4.69
COP	Cooling/Heating			3.21/3.62	3.53/3.68	3.21/3.61	3.01/3.41
Energy label	Cooling/Heating			A/A	A/A	A/A	B/B
Inrush current (Max. running current)			A	5(17)	5(24)	5(26)	5(24)
Sound pressure level*1 ※	Indoor		dB(A)	Hi:39 Me:35 Lo:33	Hi:50 Me:48 Lo:44		
	Outdoor			Cooling:51 Heating:48	Cooling:48 Heating:50		Cooling:49 Heating:52
Sound power level*1	Outdoor		dB(A)	66	70	70	72
Air flow ※	Indoor		CMM	Hi:18 Me:16 Lo:14	Hi:26 Me:23 Lo:19		
	Outdoor			Cooling:60 Heating:50	100		
Indoor unit: Exterior dimensions	Height x Width x Depth		mm	1850x600x320			
Indoor unit: Net weight			kg	49	52		
Indoor unit: Air filter, Q'ty				Plastic net x 1(washable)			
Indoor unit: Remote control(option)				wired:RC-E4 installed wireless:RCN-KIT3-E(option)			
Outdoor unit: Exterior dimensions	Height x Width x Depth		mm	750x880(+88)x340	1300x970x370		
Outdoor unit: Net weight			kg	60	105		
Outdoor unit: Type of compressor				Rotary			
Outdoor unit: Ref.amount precharged			kg(m)	2.95(30)	4.5(30)		
Outdoor unit: Ref.piping size	Liquid/Gas		ø	9.52/15.88			
Range of usage: Ref.piping length			m	50	100		
Range of usage: Vertical height difference	O/U is higher		m	30			
Range of usage: Vertical height difference	O/U is lower		m	15			
Operating temperature range	Cooling		O/U	-15~43*2			
Operating temperature range	Heating		O/U	-20~20			

SPECIFICATIONS

				Hyper Inverter		
Set model name				**FDF100VSXVD**	**FDF125VSXVD**	**FDF140VSXVD**
Indoor name				FDF100VD	FDF125VD	FDF140VD
Outdoor name				FDC100VSX	FDC125VSX	FDC140VSX
Power source				3 Phase 380-415V 50Hz, 3Phase 380V 60Hz		
Nominal cooling capacity (Min~Max)	ISO-T1(JIS)		kW	10.0 (4.0~11.2)	12.5 (5.0~14.0)	14.0 (5.0~16.0)
Nominal heating capacity (Min~Max)	ISO-T1(JIS)		kW	11.2 (4.0~16.0)	14.0 (4.0~18.0)	16.0 (4.0~20.0)
Power consumption	Cooling/Heating		kW	2.83/3.04	3.89/3.88	4.65/4.69
COP	Cooling/Heating			3.53/3.68	3.21/3.61	3.01/3.41
Energy label	Cooling/Heating			A/A	A/A	B/B
Inrush current (Max. running current)			A	5(15)		
Sound pressure level*1 ※	Indoor		dB(A)	Hi:50 Me:48 Lo:44		
	Outdoor			Cooling:48 Heating:50		Cooling:49 Heating:52
Sound power level*1	Outdoor		dB(A)	70	70	72
Air flow ※	Indoor		CMM	Hi:26 Me:23 Lo:19		
	Outdoor			100		
Indoor unit: Exterior dimensions	Height x Width x Depth		mm	1850x600x320		
Indoor unit: Net weight			kg	52		
Indoor unit: Air filter, Q'ty				Plastic net x 1(washable)		
Indoor unit: Remote control(option)				wired:RC-E4 installed wireless:RCN-KIT3-E(option)		
Outdoor unit: Exterior dimensions	Height x Width x Depth		mm	1300x970x370		
Outdoor unit: Net weight			kg	105		
Outdoor unit: Type of compressor				Rotary		
Outdoor unit: Ref.amount precharged			kg(m)	4.5(30)		
Outdoor unit: Ref.piping size	Liquid/Gas		ø	9.52/15.88		
Range of usage: Ref.piping length			m	100		
Range of usage: Vertical height difference	O/U is higher		m	30		
Range of usage: Vertical height difference	O/U is lower		m	15		
Operating temperature range	Cooling		O/U	-15~43*2		
Operating temperature range	Heating		O/U	-20~20		

The data are measured under the following conditions(ISO-T1).
Cooling:Indoor temp. of 27˚CDB, 19˚CWB, and outdoor temp. of 35˚CDB.
Heating:Indoor temp. of 20˚CDB, and outdoor temp. of 7˚CDB, 6˚CWB.
*1 : Indicates the value in an anechoic chamber. During operation these values are somewhat higher due to ambient conditions.
*2 : If a cooling operation is conducted when the outdoor air temperature is –5˚C or lower, the outdoor unit should be installed at a place where it is not influenced by natural wind. If wind blows, the low pressure will drop and compressor frequency will increase, this will cause the capacity to drop and may cause the unit to break down.

※ Powerful-Hi can be selected. Sound level:71VNXVD 42dB, 100/125/140VNXVD 54dB, 100/125/140VSXVD 54dB
Air flow: 71VNXVD 20CMM, 100/125/140VNXVD 29CMM, 100/125/140VSXVD 29CMM

CEILING CASSETTE -4way-

FDT





FDT 100/125/140VF

Remote control (Option)

Wired



RC-EX1A



RC-E5



RCH-E3

Wireless



RCN-T-36W-E

SPECIFICATIONS

				Micro Inverter					
Set model name				FDT100VNVF	FDT125VNVF	FDT140VNVF	FDT100VSVF	FDT125VSVF	FDT140VSVF
Indoor name				FDT100VF	FDT125VF	FDT140VF	FDT100VF	FDT125VF	FDT140VF
Outdoor name				FDC100VN	FDC125VN	FDC140VN	FDC100VS	FDC125VS	FDC140VS
Power source				1Phase 220-240V 50Hz, 1Phase 220V 60Hz			3Phase 380-415V 50Hz, 3Phase 380V 60Hz		
Nominal cooling capacity (Min~Max)	ISO-T1(JIS)		kW	10.0 (4.0~11.2)	12.5 (5.0~14.0)	14.0 (5.0~14.5)	10.0 (4.0~11.2)	12.5 (5.0~14.0)	14.0 (5.0~14.5)
Nominal heating capacity (Min~Max)	ISO-T1(JIS)		kW	11.2 (4.0~12.5)	14.0 (4.0~16.0)	16.0 (4.0~16.5)	11.2 (4.0~12.5)	14.0 (4.0~16.0)	16.0 (4.0~16.5)
Power consumption	Cooling/Heating		kW	2.76/2.74	4.05/3.77	4.98/4.57	2.76/2.74	4.05/3.77	4.98/4.57
COP	Cooling/Heating			3.62/4.09	3.09/3.71	2.81/3.50	3.62/4.09	3.09/3.71	2.81/3.50
Energy label	Cooling/Heating			A/A	B/A	C/B	A/A	B/A	C/B
Inrush current (Max. running current)			A	5(24)			5(15)		
Sound pressure level*1 ※	Indoor		dB(A)	Hi:40 Me:37 Lo:35	Hi:42 Me:40 Lo:37	Hi:43 Me:41 Lo:38	Hi:40 Me:37 Lo:35	Hi:42 Me:40 Lo:37	Hi:43 Me:41 Lo:38
	Outdoor			49	Cooling:50 Heating:51	51	49	Cooling:50 Heating:51	51
Sound power level*1	Outdoor		dB(A)	70	72	73	70	72	73
Air flow ※	Indoor		CMM	Hi:27 Me:24 Lo:20	Hi:30 Me:27 Lo:23	Hi:30 Me:27 Lo:23	Hi:27 Me:24 Lo:20	Hi:30 Me:27 Lo:23	Hi:30 Me:27 Lo:23
	Outdoor			Cooling:75 Heating:73			Cooling:75 Heating:73		
Indoor unit: Exterior dimensions	Height x Width x Depth		mm	Unit:298x840x840 Panel:35x950x950					
Indoor unit: Net weight			kg	32.5(Unit:27 Panel:5.5)					
Indoor unit: Panel	Unit+Panel			T-PSA-3BW-E					
Indoor unit: Air filter, Q'ty				Pocket Plastic net x1 (Washable)					
Indoor unit: Remote control(option)				Wired:RC-EX1A, RC-E5, RCH-E3 Wireless:RCN-T-36W-E					
Outdoor unit: Exterior dimensions	Height x Width x Depth		mm	845x970x370					
Outdoor unit: Net weight			kg	81			83		
Outdoor unit: Type of compressor				Rotary					
Outdoor unit: Ref.amount precharged			kg(m)	3.8(30)					
Outdoor unit: Ref.piping size	Liquid/Gas		ø	9.52/15.88					
Range of usage: Ref.piping length			m	50					
Range of usage: Vertical height difference	O/U is higher		m	30					
Range of usage: Vertical height difference	O/U is lower		m	15					
Operating temperature range	Cooling		O/U	-15~43*2					
Operating temperature range	Heating		O/U	-20~20					

The data are measured under the following conditions(ISO-T1).
Cooling:Indoor temp. of 27˚CDB, 19˚CWB, and outdoor temp. of 35˚CDB. Heating:Indoor temp. of 20˚CDB, and outdoor temp. of 7˚CDB, 6˚CWB.
*1 : Indicates the value in an anechoic chamber. During operation these values are somewhat higher due to ambient conditions.
*2 : If a cooling operation is conducted when the outdoor air temperature is –5˚C or lower, the outdoor unit should be installed at a place where it is not influenced by natural wind. If wind blows, the low pressure will drop and compressor frequency will increase, this will cause the capacity to drop and may cause the unit to break down.

※ Powerful-Hi can be selected. Sound level: 100/125/140VNVF 51dB, 100/125/140VSVF 51dB
Air flow: 100/125/140VNVF 37CMM, 100/125/140VSVF 37CMM

DUCT CONNECTED -High Static pressure-

FDU



FDU 100/125/140VD



FDU 200/250VF

Remote control (Option)

Wired

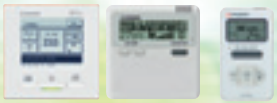

RC-EX1A RC-E5 RCH-E3

Wireless



RCN-KIT3-E

Fan control kit
(100~200Pa) (option)

U-FCRA
[For 200/250VF]



Adaptability to higher static pressures

High static pressure of 200 Pa (FDU200/250VF)

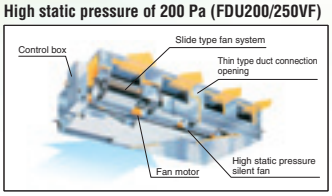

SPECIFICATIONS

*Not available in 60Hz

				Micro Inverter	
Set model name				*FDU100VNVD	*FDU125VNVD
Indoor name				FDU100VD	FDU125VD
Outdoor name				FDC100VN	FDC125VN
Power source				1Phase 220-240V 50Hz	
Nominal cooling capacity (Min~Max)	ISO-T1(JIS)		kW	10.0 (4.0~11.2)	12.5 (5.0~14.0)
Nominal heating capacity (Min~Max)	ISO-T1(JIS)		kW	11.2 (4.0~12.5)	14.0 (4.0~16.0)
Power consumption	Cooling/Heating		kW	2.88/2.99	4.04/3.79
COP	Cooling/Heating			3.47/3.75	3.09/3.69
Energy label	Cooling/Heating			A/A	B/A
Inrush current (Max. running current)			A	5(25)	5(27)
Sound pressure level*1	Indoor		dB(A)	Hi:42 Lo:37	Hi:43 Lo:38
	Outdoor			49	Cooling:50 Heating:51
Sound power level*1	Outdoor		dB(A)	70	72
Air flow	Indoor		CMM	Hi:34 Lo:27	Hi:42 Lo:33.5
	Outdoor			Cooling:75 Heating:73	
External static pressure			Pa	Standard:50, Max:130	
Indoor unit: Exterior dimensions	Height x Width x Depth		mm	350x1,370x650	
Indoor unit: Net weight			kg	63	
Indoor unit: Air filter, Q'ty				Procure locally	
Indoor unit: Remote control(option)				Wired:RC-EX1A, RC-E5, RCH-E3 Wireless:RCN-KIT3-E	
Outdoor unit: Exterior dimensions	Height x Width x Depth		mm	845x970x370	
Outdoor unit: Net weight			kg	81	
Outdoor unit: Type of compressor				Rotary	
Outdoor unit: Ref.amount precharged			kg(m)	3.8(30)	
Outdoor unit: Ref.piping size	Liquid/Gas		ø	9.52/15.88	
Range of usage: Ref.piping length			m	50	
Range of usage: Vertical height difference	O/U is higher		m	30	
Range of usage: Vertical height difference	O/U is lower		m	15	
Operating temperature range	Cooling		O/U	-15~43*3	-15~43*2
Operating temperature range	Heating		O/U	-20~20	

SPECIFICATIONS

				Micro Inverter					
Set model name				*FDU140VNVD	*FDU100VSVD	*FDU125VSVD	*FDU140VSVD	FDU200VSVF	FDU250VSVF
Indoor name				FDU140VD	FDU100VD	FDU125VD	FDU140VD	FDU200VF	FDU250VF
Outdoor name				FDC140VN	FDC100VS	FDC125VS	FDC140VS	FDC200VS	FDC250VS
Power source				1Phase 220-240V 50Hz	3Phase 380-415V 50Hz			3Phase 380-415V 50Hz, 3Phase 380V 60Hz	
Nominal cooling capacity (Min~Max)	ISO-T1(JIS)		kW	14.0 (5.0~14.5)	10.0 (4.0~11.2)	12.5 (5.0~14.0)	14.0 (5.0~14.5)	20.0 (7.0~22.4)	25.0 (10.0~28.0)
Nominal heating capacity (Min~Max)	ISO-T1(JIS)		kW	16.0 (4.0~16.5)	11.2 (4.0~12.5)	14.0 (4.0~16.0)	16.0 (4.0~16.5)	22.4 (7.6~25.0)	28.0 (9.5~31.5)
Power consumption	Cooling/Heating		kW	4.95/4.43	2.88/2.99	4.04/3.79	4.95/4.43	50Hz:6.59/6.08 60Hz:6.58/5.84	50Hz: 9.91/8.50 60Hz:10.21/8.22
COP	Cooling/Heating			2.83/3.61	3.47/3.75	3.09/3.69	2.83/3.61	50Hz:3.03/3.68 60Hz:3.04/3.84	50Hz:2.52/3.29 60Hz:2.45/3.41
Energy label	Cooling/Heating			C/A	A/A	B/A	C/A	B/A	50Hz:E/C 60Hz:E/B
Inrush current (Max. running current)			A	5(28)	5(16)	5(18)	5(19)	5(24)	5(27)
Sound pressure level*1	Indoor		dB(A)	Hi:43 Lo:38	Hi:42 Lo:37	Hi:43 Lo:38		51	52
	Outdoor			51	49	Cooling:50 Heating:51	51	57	Cooling:57 Heating:58
Sound power level*1	Outdoor		dB(A)	73	70	72	73	74	74
Air flow	Indoor		CMM	Hi:42 Lo:33.5	Hi:34 Lo:27	Hi:42 Lo:33.5		50Hz:51, 60Hz:60	50Hz:68, 60Hz:80
	Outdoor			Cooling:75 Heating:73				Cooling:150 Heating:145	
External static pressure *2			Pa	Standard:50, Max:130				Standard:100, Max:200	
Indoor unit: Exterior dimensions	Height x Width x Depth		mm	350x1,370x650				360x1,570x830	
Indoor unit: Net weight			kg	63				92	
Indoor unit: Air filter, Q'ty				Procure locally					
Indoor unit: Remote control(option)				Wired:RC-EX1A, RC-E5, RCH-E3 Wireless:RCN-KIT3-E					
Outdoor unit: Exterior dimensions	Height x Width x Depth		mm	845x970x370				1,300x970x370	1,505x970x370
Outdoor unit: Net weight			kg	81	83			122	140
Outdoor unit: Type of compressor				Rotary				Scroll	
Outdoor unit: Ref.amount precharged			kg(m)	3.8(30)				5.4(30)	7.2(30)
Outdoor unit: Ref.piping size	Liquid/Gas		ø	9.52/15.88				9.52/25.4	12.7/25.4
Range of usage: Ref.piping length			m	50				70	
Range of usage: Vertical height difference	O/U is higher		m	30					
Range of usage: Vertical height difference	O/U is lower		m	15					
Operating temperature range	Cooling		O/U	-15~43 *3					
Operating temperature range	Heating		O/U	-20~20				-15~20	

The data are measured under the following conditions(ISO-T1).
Cooling:Indoor temp. of 27˚CDB, 19˚CWB, and outdoor temp. of 35˚CDB. Heating:Indoor temp. of 20˚CDB, and outdoor temp. of 7˚CDB, 6˚CWB. External static pressure of FDU100/125/140 is 60Pa and that of FDU200/250 is 100Pa.

*1 : Indicates the value in an anechoic chamber. During operation these values are somewhat higher due to ambient conditions.

*2 : External static pressure is changeable to be set by the remote control. Standard external static pressure is factory setting. MAX external static pressure is "High static pressure" setting. The values of sound pressure level become 5dB(A) higher at eternal static pressure of 130Pa.

*3 : If a cooling operation is conducted when the outdoor air temperature is –5˚C or lower, the outdoor unit should be installed at a place where it is not influenced by natural wind. If wind blows, the low pressure will drop and compressor frequency will increase, this will cause the capacity to drop and may cause the unit to break down.

DUCT CONNECTED -Low/Middle Static pressure-

FDUM



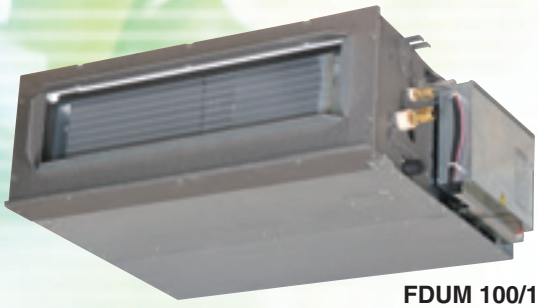

FDUM 100/125/140VF



external static pressure loss:5pa

Filter kit (option)
UM-FL3EF : for 100, 125, 140

Remote control (Option)

Wired



RC-EX1A



RC-E5



RCH-E3

Wireless



RCN-KIT3-E

SPECIFICATIONS

				Micro Inverter					
Set model name				FDUM100VNVF	FDUM125VNVF	FDUM140VNVF	FDUM100VSVF	FDUM125VSVF	FDUM140VSVF
Indoor name				FDUM100VF	FDUM125VF	FDUM140VF	FDUM100VF	FDUM125VF	FDUM140VF
Outdoor name				FDC100VN	FDC125VN	FDC140VN	FDC100VS	FDC125VS	FDC140VS
Power source				1Phase 220-240V 50Hz, 1Phase 220V 60Hz			3Phase 380-415V 50Hz, 3Phase 380V 60Hz		
Nominal cooling capacity (Min~Max)	ISO-T1(JIS)		kW	10.0 (4.0~11.2)	12.5 (5.0~14.0)	14.0 (5.0~14.5)	10.0 (4.0~11.2)	12.5 (5.0~14.0)	14.0 (5.0~14.5)
Nominal heating capacity (Min~Max)	ISO-T1(JIS)		kW	11.2 (4.0~12.5)	14.0 (4.0~16.0)	16.0 (4.0~16.5)	11.2 (4.0~12.5)	14.0 (4.0~16.0)	16.0 (4.0~16.5)
Power consumption	Cooling/Heating		kW	2.80/3.02	3.90/3.88	4.95/4.69	2.80/3.02	3.90/3.88	4.95/4.69
COP	Cooling/Heating			3.57/3.71	3.21/3.61	2.83/3.41	3.57/3.71	3.21/3.61	2.83/3.41
Energy label	Cooling/Heating			A/A	A/A	C/B	A/A	A/A	C/B
Inrush current (Max. running current)			A	5(24)			5(15)		
Sound pressure level*1 ※	Indoor		dB(A)	Hi:38 Me:36 Lo:30	Hi:40 Me:34 Lo:29	Hi:40 Me:35 Lo:30	Hi:38 Me:36 Lo:30	Hi:40 Me:34 Lo:29	Hi:40 Me:35 Lo:30
	Outdoor			49	Cooling:50 Heating:51	51	49	Cooling:50 Heating:51	51
Sound power level*1	Outdoor		dB(A)	70	72	73	70	72	73
Air flow ※	Indoor		CMM	Hi:28 Me:25 Lo:19	Hi:32 Me:26 Lo:20	Hi:35 Me:28 Lo:22	Hi:28 Me:25 Lo:19	Hi:32 Me:26 Lo:20	Hi:35 Me:28 Lo:22
	Outdoor			Cooling:75 Heating:73					
Static pressure			Pa	Standard:60, Max:100					
Indoor unit: Exterior dimensions	Height x Width x Depth		mm	280x1,370x740					
Indoor unit: Net weight			kg	54					
Indoor unit: Air filter, Q'ty				Procure locally					
Indoor unit: Remote control(option)				Wired:RC-EX1A, RC-E5, RCH-E3 Wireless:RCN-KIT3-E					
Outdoor unit: Exterior dimensions	Height x Width x Depth		mm	845x970x370					
Outdoor unit: Net weight			kg	81			83		
Outdoor unit: Type of compressor				Rotary					
Outdoor unit: Ref.amount precharged			kg(m)	3.8(30)					
Outdoor unit: Ref.piping size	Liquid/Gas		ø	9.52/15.88					
Range of usage: Ref.piping length			m	50					
Range of usage: Vertical height difference	O/U is higher		m	30					
Range of usage: Vertical height difference	O/U is lower		m	15					
Operating temperature range	Cooling		O/U	-15~43*2					
Operating temperature range	Heating		O/U	-20~20					

The data are measured under the following conditions(ISO-T1).
Cooling:Indoor temp. of 27˚CDB, 19˚CWB, and outdoor temp. of 35˚CDB. Heating:Indoor temp. of 20˚CDB, and outdoor temp. of 7˚CDB, 6˚CWB. External static pressure of indoor units is 60Pa.

*1 : Indicates the value in an anechoic chamber. During operation these values are somewhat higher due to ambient conditions.

*2 : If a cooling operation is conducted when the outdoor air temperature is –5˚C or lower, the outdoor unit should be installed at a place where it is not influenced by natural wind. If wind blows, the low pressure will drop and compressor frequency will increase, this will cause the capacity to drop and may cause the unit to break down.

※ Powerful-Hi can be selected. Sound level: 100VN(S)VF 44dB, 125VN(S)VF 45dB, 140VN(S)VF 47dB
Air flow: 100VN(S)VF 36CMM, 125VN(S)VF 39CMM,140VN(S)VF 48CMM

CEILING SUSPENDED

FDEN





FDEN 100/125/140VF

Remote control (Option)

Wired



RC-EX1A



RC-E5



RCH-E3

Wireless



RCN-E1R

SPECIFICATIONS

				Micro Inverter					
Set model name				FDEN100VNVF	FDEN125VNVF	FDEN140VNVF	FDEN100VSVF	FDEN125VSVF	FDEN140VSVF
Indoor name				FDEN100VF	FDEN125VF	FDEN140VF	FDEN100VF	FDEN125VF	FDEN140VF
Outdoor name				FDC100VN	FDC125VN	FDC140VN	FDC100VS	FDC125VS	FDC140VS
Power source				1Phase 220-240V 50Hz, 1Phase 220V 60Hz			3Phase 380-415V 50Hz, 3Phase 380V 60Hz		
Nominal cooling capacity (Min~Max)	ISO-T1(JIS)		kW	10.0 (4.0~11.2)	12.5 (5.0~14.0)	14.0 (5.0~14.5)	10.0 (4.0~11.2)	12.5 (5.0~14.0)	14.0 (5.0~14.5)
Nominal heating capacity (Min~Max)	ISO-T1(JIS)		kW	11.2 (4.0~12.5)	14.0 (4.0~16.0)	16.0 (4.0~16.5)	11.2 (4.0~12.5)	14.0 (4.0~16.0)	16.0 (4.0~16.5)
Power consumption	Cooling/Heating		kW	2.85/2.97	4.45/4.08	5.80/4.92	2.85/2.97	4.45/4.08	5.80/4.92
COP	Cooling/Heating			3.51/3.77	2.81/3.43	2.41/3.25	3.51/3.77	2.81/3.43	2.41/3.25
Energy label	Cooling/Heating			A/A	C/B	E/C	A/A	C/B	E/C
Inrush current (Max. running current)			A	5(24)			5(15)		
Sound pressure level*1 ※	Indoor		dB(A)	Hi:44 Me:41 Lo:39	Hi:46 Me:44 Lo:43		Hi:44 Me:41 Lo:39	Hi:46 Me:44 Lo:43	
	Outdoor			49	Cooling:50 Heating:51	51	49	Cooling:50 Heating:51	51
Sound power level*1	Outdoor		dB(A)	70	72	73	70	72	73
Air flow ※	Indoor		CMM	Hi:26 Me:23 Lo:21	Hi:29 Me:26 Lo:23		Hi:26 Me:23 Lo:21	Hi:29 Me:26 Lo:23	
	Outdoor			Cooling:75 Heating:73					
Indoor unit: Exterior dimensions		Height x Width x Depth	mm	250x1,620x690					
Indoor unit: Net weight			kg	49					
Indoor unit: Air filter, Q'ty				Pocket Plastic net x2 (Washable)					
Indoor unit: Remote control(option)				Wired:RC-EX1A, RC-E5, RCH-E3 Wireless:RCN-E1R					
Outdoor unit: Exterior dimensions		Height x Width x Depth	mm	845x970x370					
Outdoor unit: Net weight			kg	81			83		
Outdoor unit: Type of compressor				Rotary					
Outdoor unit: Ref.amount precharged			kg(m)	3.8(30)					
Outdoor unit: Ref.piping size		Liquid/Gas	ø	9.52/15.88					
Range of usage: Ref.piping length			m	50					
Range of usage: Vertical height difference		O/U is higher	m	30					
Range of usage: Vertical height difference		O/U is lower	m	15					
Operating temperature range		Cooling	O/U	-15~43*2					
Operating temperature range		Heating	O/U	-20~20					

The data are measured under the following conditions(ISO-T1).
Cooling:Indoor temp. of 27˚CDB, 19˚CWB, and outdoor temp. of 35˚CDB.
Heating:Indoor temp. of 20˚CDB, and outdoor temp. of 7˚CDB, 6˚CWB.

*1 : Indicates the value in an anechoic chamber. During operation these values are somewhat higher due to ambient conditions.

*2 : If a cooling operation is conducted when the outdoor air temperature is –5˚C or lower, the outdoor unit should be installed at a place where it is not influenced by natural wind. If wind blows, the low pressure will drop and compressor frequency will increase, this will cause the capacity to drop and may cause the unit to break down.

※ Powerful-Hi can be selected. Sound level: 100VNVF 46dB, 125/140VNVF 50dB, 100VSVF 46dB, 125/140VSVF 50dB
Air flow: 100VNVF 28CMM, 125/140VNVF 32CMM, 100VSVF 28CMM, 125/140VSVF 32CMM

FLOOR STANDING

FDF





Wireless remote control (Option)

RCN-KIT3-E



FDF 100/125/140VD

SPECIFICATIONS

				Micro Inverter					
Set model name				FDF100VNVD	FDF125VNVD	FDF140VNVD	FDF100VSVD	FDF125VSVD	FDF140VSVD
Indoor name				FDF100VD	FDF125VD	FDF140VD	FDF100VD	FDF125VD	FDF140VD
Outdoor name				FDC100VN	FDC125VN	FDC140VN	FDC100VS	FDC125VS	FDC140VS
Power source				1 Phase 220-240 50Hz, 1Phase 220V 60Hz			3 Phase 380-415V 50Hz, 3Phase 380V 60Hz		
Nominal cooling capacity (Min~Max)	ISO-T1(JIS)		kW	10.0 (4.0~11.2)	12.5 (5.0~14.0)	14.0 (5.0~14.5)	10.0 (4.0~11.2)	12.5 (5.0~14.0)	14.0 (5.0~14.5)
Nominal heating capacity (Min~Max)	ISO-T1(JIS)		kW	11.2 (4.0~12.5)	14.0 (4.0~16.0)	16.0 (4.0~16.5)	11.2 (4.0~12.5)	14.0 (4.0~16.0)	16.0 (4.0~16.5)
Power consumption	Cooling/Heating		kW	3.12/3.10	4.40/4.36	5.15/5.31	3.12/3.10	4.40/4.36	5.15/5.31
COP	Cooling/Heating			3.21/3.61	2.84/3.21	2.72/3.01	3.21/3.61	2.84/3.21	2.72/3.01
Energy label	Cooling/Heating			A/A	C/C	D/D	A/A	C/C	D/D
Inrush current (Max. running current)			A	5(24)			5(15)		
Sound pressure level*1 ※	Indoor		dB(A)	Hi:50 Me:48 Lo:44					
	Outdoor			49	Cooling:50 Heating;51	51	49	Cooling:50 Heating;51	51
Sound power level*1	Outdoor		dB(A)	70	72	73	70	72	73
Air flow ※	Indoor		CMM	Hi:26 Me:23 Lo:19					
	Outdoor			Cooling:75 Heating:73					
Indoor unit: Exterior dimensions	Height x Width x Depth		mm	1850x600x320					
Indoor unit: Net weight			kg	52					
Indoor unit: Air filter, Q'ty				Plastic net x1(washable)					
Indoor unit: Remote control(option)				wired:RC-E4 installed wireless:RCN-KIT3-E					
Outdoor unit: Exterior dimensions	Height x Width x Depth		mm	845x970x370					
Outdoor unit: Net weight			kg	81			83		
Outdoor unit: Type of compressor				Rotary					
Outdoor unit: Ref.amount precharged			kg(m)	3.8(30)					
Outdoor unit: Ref.piping size	Liquid/Gas		ø	9.52/15.88					
Range of usage: Ref.piping length			m	50					
Range of usage: Vertical height difference	O/U is higher		m	30					
Range of usage: Vertical height difference	O/U is lower		m	15					
Operating temperature range	Cooling		O/U	-15~43*2					
Operating temperature range	Heating		O/U	-20~20					

The data are measured under the following conditions(ISO-T1).
Cooling:Indoor temp. of 27˚CDB, 19˚CWB, and outdoor temp. of 35˚CDB.
Heating:Indoor temp. of 20˚CDB, and outdoor temp. of 7˚CDB, 6˚CWB.

*1 : Indicates the value in an anechoic chamber. During operation these values are somewhat higher due to ambient conditions.

*2 : If a cooling operation is conducted when the outdoor air temperature is –5˚C or lower, the outdoor unit should be installed at a place where it is not influenced by natural wind. If wind blows, the low pressure will drop and compressor frequency will increase, this will cause the capacity to drop and may cause the unit to break down.

※ Powerful-Hi can be selected. Sound level:100/125/140VNVD 54dB, 100/125/140VSVD 54dB
Air flow: 100/125/140VNVD 29CMM, 100/125/140VSVD 29CMM

OUTDOOR UNIT (1.5-10.0HP)

Hyper Inverter



SRC40ZJX-S
SRC50ZJX-S*
SRC60ZJX-S*
(1.5HP~2.5HP)

*SRC50/60ZJX-S is common for both of outdoor units of SRK50/60ZJX-S (Residential Air-conditioners) and 1.5, 2, 2.5HP of Inverter Packaged Air-Conditioners. Common components make for easy inventory control and the installation procedure will be the same.



FDC71VNX
(3.0HP)



FDC100VNX
FDC100VSX
(4.0HP)

FDC125VNX
FDC125VSX
(5.0HP)

FDC140VNX
FDC140VSX
(6.0HP)

Micro Inverter



FDC100VN FDC100VS
FDC125VN FDC125VS
FDC140VN FDC140VS
(4.0HP~6.0HP)



FDC200VS
(8.0HP)



FDC250VS
(10.0HP)

Blue Fin (3~10HP)

Due to application of blue coated fins (KS101) for the heat exchanger of new outdoor unit, corrosion resistance has been improved compared to current models.

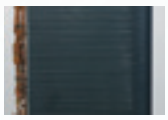

Base heater kit (option)

This kit is recommended to be used in an area where the lowest temperature drops below 0˚C.

CW-H-E1
applied for
FDC71VNX
FDC100~250VN,VS
FDC100~140VNX,VSX



Installation workability

Enhanced installation workability thanks to the extended pipe length – longest level in the industry and pre-charged refrigerant.

Point 1 Piping length – 100m (Hyper Inverter 4~6HP)

Refer to our Technical Manual in detail

Hyper Inverter

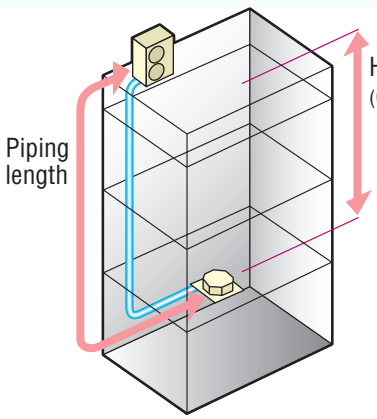

HP	Piping length	Height difference
1.5~2.5	30m	20m
3	50m	30m
4~6	100m	30m

Micro Inverter

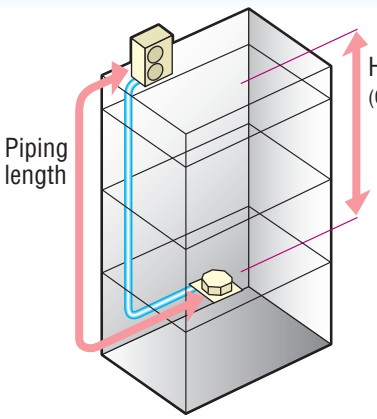

HP	Piping length	Height difference
4~6	50m	30m
8·10	70m	30m

Point 2 Refrigerant precharged piping length extending to 30m

Refrigerant precharged piping length extends up to 30m. (1.5~2.5HP:15m)
This eliminates the need to add refrigerant on site, which sets it free from trouble of excessive or insufficient charging of refrigerant, and allows carrying out the installation smoothly.

MULTI SYSTEM

Up to Four indoor units can be connected to a single outdoor unit and simultaneously operated with a single remote control.

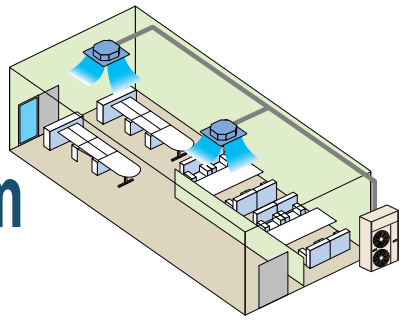

Twin / Triple / Double Twin Multi System

By referring to the following table for applicable indoor units, select the same models and capacities.

Applicable indoor units

Model	Capacity						Combination		
	40	50	60	71	100	125	Twin	Triple	Double Twin
4way **FDT** 	●	●	●	●	●	●	●	●	●
4way compact (600 x 600mm) **FDTC** 	●	●	●				●	●	●
Low/Middle Static pressure **FDUM** 		●	●	●	●	●	●	●	
Ceiling Suspended **FDEN** 	●	●	●	●	●	●	●	●	●
Wall Mounted **SRK** Only used with outdoor units of Multi System 		●	●				●	●	
FLOOR STANDING **FDF** 				●	●	●	●		

Combination of indoor units

Outdoor Unit	HyperInverter 				Micro Inverter 				
	FDC71VNX	FDC100VNX FDC100VSX	FDC125VNX FDC125VSX	FDC140VNX FDC140VSX	FDC100VN FDC100VS	FDC125VN FDC125VS	FDC140VN FDC140VS	FDC200VS	FDC250VS
Twin	40 + 40	50 + 50	60 + 60	71 + 71	50 + 50	60 + 60	71 + 71	100 + 100	125 + 125
Triple				50 + 50 + 50			50 + 50 + 50	71 + 71 + 71	
Double Twin								50+50+50+50	60+60+60+60

Decision of piping specification

Diagrams below show the application as samples. For further information, refer to TECHNICAL MANUAL.

Twin type

Models FDC71VNX, FDC100~140VN/VS
[Branch pipe set : DIS-WA1]

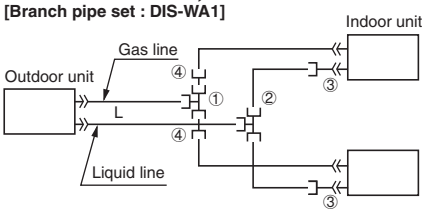

(Example)

Item / Model	Indoor unit combinations	Liquid pipe		Gas pipe	
		Main pipe	Branch pipe	Main pipe	Branch pipe
FDC71	40+40	ø9.52Xt0.8	ø9.52Xt0.8	ø15.88Xt1.0	ø12.7Xt0.8
FDC100	50+50				
FDC125	60+60				ø15.88Xt1.0
FDC140	71+71				

Notes (1) When 40-60 models of indoor units are applied to this combination, the reducer ③ supplied with the branch piping set should be used in order to reduce the liquid piping size from ø9.52mm to ø6.35mm at indoor unit side (flare connection). Accordingly be sure to select the liquid piping size ø9.52mm from branch to indoor unit.
(2) The reducer ④ is for FDC71 and 100 models only.

Chart of shapes of branch piping parts (DIS-WA1)

Gas pipe	Symbol	Liquid pipe	Symbol	Reducer	Symbol	Reducer	Symbol
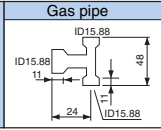	①	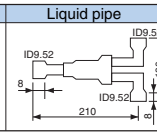	②	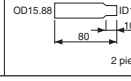	③		④

Notes (1) Symbol ① to ④ in the drawing shows the symbols of branch piping parts in the chart respectively.
(2) Branch piping should always be arranged to have level or perpendicular position.

The branch piping (both gas and liquid lines) should always be arranged to have a level or perpendicular position.

2-Way Branch

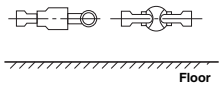

Mount —·— sections level with the floor.

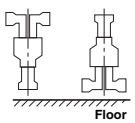

Mount —·— sections perpendicular to the floor.

3-Way Branch

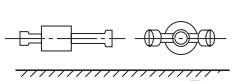

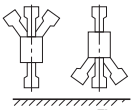

Ideal for the installation in large area and L-shaped rooms, the V Multi System has an extensive degree of flexibility in the selection of indoor units. Specifically, the selection of indoor units with different capacities in different types can be made.

V Multi System

Different models and capacities can be selected.

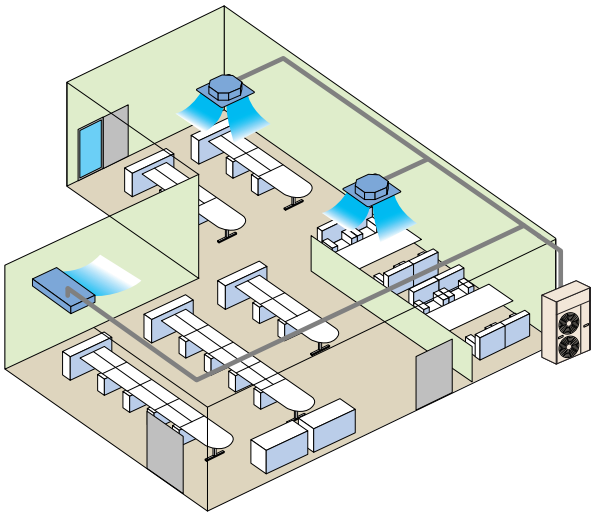

Applicable indoor units

Model \ Capacity	40	50	60	71	100	125
4way **FDT** 	●	●	●	●	●	●
Ceiling Suspended **FDEN** 	●	●	●	●	●	●

Combination of indoor units

Outdoor Unit		 		
Hyper Inverter	FDC71VNX	FDC100VNX FDC100VSX	FDC125VNX FDC125VSX	FDC140VNX FDC140VSX	——	——
Micro Inverter	——	FDC100VN FDC100VS	FDC125VN FDC125VS	FDC140VN FDC140VS	FDC200VS	FDC250VS
Twin	40 + 40	50 + 50	60 + 60 50 + 71	71 + 71	100 + 100 71 + 125	125 + 125
Triple				50 + 50 + 50	71 + 71 + 71	60 + 60 + 125 71 + 71 + 100
Double Twin					50+50+50+50	60+60+60+60

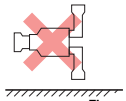

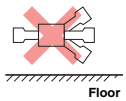

Triple type

The indoor_outdoor piping length differences among indoor units are less than 3m.

Model FDC140VN/VS
[Branch pipe set : DIS-TA1]

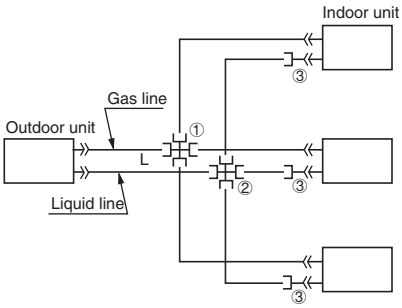

(Example)

Item / Model	Indoor unit combinations	Liquid pipe		Gas pipe	
		Main pipe	Branch pipe	Main pipe	Branch pipe
FDC140	50+50+50	ø9.52Xt0.8	ø9.52Xt0.8	ø15.88Xt1.0	ø12.7Xt0.8

Notes (1) The reducer ③ supplied with the branch piping set should be used in order to reduce the liquid piping size from ø9.52mm to ø6.35mm at indoor unit side (flare connection). Accordingly be sure to select the liquid piping size ø9.52mm from branch to indoor unit.

Chart of shapes of branch piping parts (DIS-TA1)	Gas pipe	Symbol	Liquid pipe	Symbol	Reducer	Symbol
	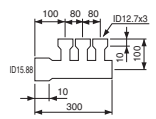	①	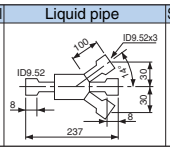	②	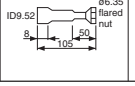	③

Notes (1) Symbol ① to ③ in the drawing shows the symbols of branch piping parts in the chart respectively.
(2) Branch piping should always be arranged to have level or perpendicular position.

CEILING CASSETTE -4way-

FDT



FDT 40/50/60/71/100/125VF

Remote control (Option)

Wired



RC-EX1A



RC-E5



RCH-E3

Wireless



RCN-T-36W-E

SPECIFICATIONS

The values are for simultaneous Multi operation.

				Hyper Inverter	
Set model name				FDT71VNXPVF	FDT100VNXPVF
				Twin	
Indoor name				FDT40VF	FDT50VF
Outdoor name				FDC71VNX	FDC100VNX
Power source				1Phase 220-240V 50Hz, 1Phase 220V 60Hz	
Nominal cooling capacity (Min~Max)	ISO-T1(JIS)		kW	7.1 (3.2~8.0)	10.0 (4.0~11.2)
Nominal heating capacity (Min~Max)	ISO-T1(JIS)		kW	8.0 (3.6~9.0)	11.2 (4.0~12.5)
Power consumption	Cooling/Heating		kW	1.85/1.99	2.56/2.66
COP	Cooling/Heating			3.84/4.02	3.91/4.21
Energy label	Cooling/Heating			A/A	A/A
Inrush current (Max. running current)			A	5(17)	5(24)
Sound pressure level*1 ※	Indoor*2		dB(A)	Hi:33 Me:31 Lo:30	
	Outdoor			Cooling:51 Heating:48	Cooling:48 Heating:50
Sound power level*1	Outdoor		dB(A)	66	70
Air flow ※	Indoor*2		CMM	Hi:18 Me:16 Lo:14	
	Outdoor			Cooling:60 Heating:50	100
Indoor unit: Exterior dimensions	Height x Width x Depth		mm	Unit:246x840x840 Panel:35x950x950	
Indoor unit: Net weight	Unit+Panel		kg	27.5(Unit:22 Panel:5.5)	
Indoor unit: Panel				T-PSA-3BW-E	
Indoor unit: Air filter, Q'ty				Pocket Plastic net x1 (Washable)	
Indoor unit: Remote control(option)				Wired:RC-EX1A, RC-E5, RCH-E3	Wireless:RCN-T-36W-E
Outdoor unit: Exterior dimensions	Height x Width x Depth		mm	750x880(+88)x340	1,300x970x370
Outdoor unit: Net weight			kg	60	105
Outdoor unit: Ref.amount precharged			kg(m)	2.95(30)	4.5(30)
Outdoor unit: Ref.piping size	Liquid/Gas		ø	9.52/15.88	
Range of usage: Ref.piping length			m	50	100
Range of usage: Vertical height difference	O/U is higher		m	30	
	O/U is lower		m	15	
Operating temperature range	Cooling		O/U	-15~43*3	
	Heating		O/U	-20~20	

SPECIFICATIONS

The values are for simultaneous Multi operation.

				Hyper Inverter						
Set model name				FDT125VNXPVF	FDT140VNXPVF	FDT140VNXTVF	FDT100VSXPVF	FDT125VSXPVF	FDT140VSXPVF	FDT140VSXTVF
				Twin		Triple	Twin			Triple
Indoor name				FDT60VF	FDT71VF	FDT50VF	FDT50VF	FDT60VF	FDT71VF	FDT50VF
Outdoor name				FDC125VNX	FDC140VNX	FDC140VNX	FDC100VSX	FDC125VSX	FDC140VSX	FDC140VSX
Power source				1Phase 220-240V 50Hz, 1Phase 220V 60Hz			3Phase 380-415V 50Hz, 3Phase 380V 60Hz			
Nominal cooling capacity (Min~Max)	ISO-T1(JIS)		kW	12.5 (5.0~14.0)	14.0 (5.0~16.0)	14.0 (5.0~16.0)	10.0 (4.0~11.2)	12.5 (5.0~14.0)	14.0 (5.0~14.5)	14.0 (5.0~14.5)
Nominal heating capacity (Min~Max)	ISO-T1(JIS)		kW	14.0 (4.0~17.0)	16.0 (4.0~18.0)	16.0 (4.0~18.0)	11.2 (4.0~16.0)	14.0 (4.0~18.0)	16.0 (4.0~20.0)	16.0 (4.0~20.0)
Power consumption	Cooling/Heating		kW	3.06/3.22	3.88/3.70	3.88/3.76	2.56/2.66	3.06/3.22	3.88/3.70	3.88/3.76
COP	Cooling/Heating			4.08/4.35	3.61/4.32	3.61/4.26	3.91/4.21	4.08/4.35	3.61/4.32	3.61/4.26
Energy label	Cooling/Heating			A/A	A/A	A/A	A/A	A/A	A/A	A/A
Inrush current (Max. running current)			A	5(26)			5(15)			
Sound pressure level*1 ※	Indoor*2		dB(A)	Hi:33 Me:31 Lo:30	Hi:35 Me:33 Lo:31	Hi:33 Me:31 Lo:30	Hi:33 Me:31 Lo:30		Hi:35 Me:33 Lo:31	Hi:33 Me:31 Lo:30
	Outdoor			Cooling:48 Heating:50	Cooling:49 Heating:52		Cooling:48 Heating:50		Cooling:49 Heating:52	
Sound power level*1	Outdoor		dB(A)	70	72	72	70	70	72	72
Air flow ※	Indoor*2		CMM	Hi:18 Me:16 Lo:14	Hi:21 Me:19 Lo:17	Hi:18 Me:16 Lo:14	Hi:18 Me:16 Lo:14		Hi:21 Me:19 Lo:17	Hi:18 Me:16 Lo:14
	Outdoor			100						
Indoor unit: Exterior dimensions	Height x Width x Depth		mm	Unit:246x840x840 Panel:35x950x950						
Indoor unit: Net weight	Unit+Panel		kg	29.5(Unit:24 Panel:5.5)		27.5(Unit:22 Panel:5.5)	29.5(Unit:24 Panel:5.5)			27.5(Unit:22 Panel:5.5)
Indoor unit: Panel				T-PSA-3BW-E						
Indoor unit: Air filter, Q'ty				Pocket Plastic net x1 (Washable)						
Indoor unit: Remote control(option)				Wired:RC-EX1A, RC-E5, RCH-E3 Wireless:RCN-T-36W-E						
Outdoor unit: Exterior dimensions	Height x Width x Depth		mm	1,300x970x370						
Outdoor unit: Net weight			kg	105						
Outdoor unit: Ref.amount precharged			kg(m)	4.5(30)						
Outdoor unit: Ref.piping size	Liquid/Gas		ø	9.52/15.88						
Range of usage: Ref.piping length			m	100						
Range of usage: Vertical height difference	O/U is higher		m	30						
	O/U is lower		m	15						
Operating temperature range	Cooling		O/U	-15~43*3						
	Heating		O/U	-20~20						

The data are measured under the following conditions(ISO-T1).
Cooling:Indoor temp. of 27˚CDB, 19˚CWB, and outdoor temp. of 35˚CDB. Heating:Indoor temp. of 20˚CDB, and outdoor temp. of 7˚CDB, 6˚CWB.
*1 : Indicates the value in an anechoic chamber. During operation these values are somewhat higher due to ambient conditions.
*2 : The values are for one indoor unit operation.
*3 : If a cooling operation is conducted when the outdoor air temperature is –5˚C or lower, the outdoor unit should be installed at a place where it is not influenced by natural wind. If wind blows, the low pressure will drop and compressor frequency will increase, this will cause the capacity to drop and may cause the unit to break down.

※ Powerful-Hi can be selected. Sound level: 71/100VNXPVF 39dB, 100VSXPVF 39dB, 125/140VNXPVF 46dB, 125/140VSXPVF 46dB, 140VNXTVF 39dB, 140VSXTVF 39dB
Air flow: 71/100VNXPVF 20CMM, 100VSXPVF 20CMM, 125/140VNXPVF 28CMM, 125/140VSXPVF 28CMM, 140VNXTVF 20CMM, 140VSXTVF 20CMM

SPECIFICATIONS

The values are for simultaneous Multi operation.

Set model name				Micro Inverter						
				FDT100VNPVF	FDT125VNPVF	FDT140VNPVF	FDT140VNTVF	FDT100VSPVF	FDT125VSPVF	FDT140VSPVF
				Twin			Triple	Twin		
Indoor name				FDT50VF	FDT60VF	FDT71VF	FDT50VF	FDT50VF	FDT60VF	FDT71VF
Outdoor name				FDC100VN	FDC125VN	FDC140VN	FDC140VN	FDC100VS	FDC125VS	FDC140VS
Power source				1Phase 220-240V 50Hz, 1Phase 220V 60Hz				3Phase 380-415V 50Hz, 3Phase 380V 60Hz		
Nominal cooling capacity (Min~Max)	ISO-T1(JIS)	kW		10.0 (4.0~11.2)	12.5 (5.0~14.0)	14.0 (5.0~14.5)	14.0 (5.0~14.5)	10.0 (4.0~11.2)	12.5 (5.0~14.0)	14.0 (5.0~14.5)
Nominal heating capacity (Min~Max)	ISO-T1(JIS)	kW		11.2 (4.0~12.5)	14.0 (4.0~16.0)	16.0 (4.0~16.5)	16.0 (4.0~16.5)	11.2 (4.0~12.5)	14.0 (4.0~16.0)	16.0 (4.0~16.5)
Power consumption	Cooling/Heating	kW		2.94/3.09	3.95/3.70	4.51/4.58	4.65/4.63	2.94/3.09	3.95/3.70	4.51/4.58
COP	Cooling/Heating			3.40/3.62	3.16/3.78	3.10/3.49	3.01/3.46	3.40/3.62	3.16/3.78	3.10/3.49
Energy label	Cooling/Heating			A/A	B/A	B/B	B/B	A/A	B/A	B/B
Inrush current (Max. running current)		A		5(24)				5(15)		
Sound pressure level*1 ※	Indoor*2	dB(A)		Hi:33 Me:31 Lo:30	Hi:33 Me:31 Lo:30	Hi:35 Me:33 Lo:31	Hi:33 Me:31 Lo:30	Hi:33 Me:31 Lo:30	Hi:33 Me:31 Lo:30	Hi:35 Me:33 Lo:31
	Outdoor			49	Cooling:50 Heating:51	51		49	Cooling:50 Heating:51	51
Sound power level*1	Outdoor	dB(A)		70	72	73	73	70	72	73
Air flow ※	Indoor*2	CMM		Hi:18 Me:16 Lo:14		Hi:21 Me:19 Lo:17	Hi:18 Me:16 Lo:14	Hi:18 Me:16 Lo:14		Hi:21 Me:19 Lo:17
	Outdoor			Cooling:75 Heating:73						
Indoor unit: Exterior dimensions	Height x Width x Depth	mm		Unit:246x840x840 Panel:35x950x950						
Indoor unit: Net weight	Unit+Panel	kg		27.5(Unit:22 Panel:5.5)	29.5(Unit:24 Panel:5.5)		27.5(Unit:22 Panel:5.5)	29.5(Unit:24 Panel:5.5)		
Indoor unit: Panel				T-PSA-3BW-E						
Indoor unit: Air filter, Q'ty				Pocket Plastic net x1 (Washable)						
Indoor unit: Remote control(option)				Wired:RC-EX1A, RC-E5, RCH-E3 Wireless:RCN-T-36W-E						
Outdoor unit: Exterior dimensions				845x970x370						
Outdoor unit: Net weight		kg		81				83		
Outdoor unit: Ref.amount precharged		kg(m)		3.8(30)						
Outdoor unit: Ref.piping size	Liquid/Gas	ø		9.52/15.88						
Range of usage: Ref.piping length		m		50						
Range of usage: Vertical height difference	O/U is higher	m		30						
Range of usage: Vertical height difference	O/U is lower	m		15						
Operating temperature range	Cooling	O/U		-15~43*3						
Operating temperature range	Heating	O/U		-20~20						

※Powerful-Hi can be selected. Sound level: 100VNPVF 39dB, 125/140VNPVF 46dB, 140VNTVF 39dB, 100VSPVF 39dB, 125/140VSPVF 46dB
Air flow: 100VNPVF 20CMM, 125/140VNPVF 28CMM, 140VNTVF 20CMM, 100VSPVF 20CMM, 125/140VSPVF 28CMM

SPECIFICATIONS

The values are for simultaneous Multi operation.

Set model name				Micro Inverter					
				FDT200VSPVF	FDT250VSPVF	FDT140VSTVF	FDT200VSTVF	FDT200VSDVF	FDT250VSDVF
				Twin		Triple		Double Twin	
Indoor name				FDT100VF	FDT125VF	FDT50VF	FDT71VF	FDT50VF	FDT60VF
Outdoor name				FDC200VS	FDC250VS	FDC140VS	FDC200VS	FDC200VS	FDC250VS
Power source				3Phase 380-415V 50Hz, 3Phase 380V 60Hz					
Nominal cooling capacity (Min~Max)	ISO-T1(JIS)	kW		20.0 (7.0~22.4)	25.0 (10.0~28.0)	14.0 (5.0~14.5)	20.0 (7.0~22.4)	20.0 (7.0~22.4)	25.0 (10.0~28.0)
Nominal heating capacity (Min~Max)	ISO-T1(JIS)	kW		22.4 (7.6~25.0)	28.0 (9.5~31.5)	16.0 (4.0~16.5)	22.4 (7.6~25.0)	22.4 (7.6~25.0)	28.0 (9.5~31.5)
Power consumption	Cooling/Heating	kW		6.58/6.02	8.30/7.75	4.65/4.63	6.49/6.12	6.58/6.15	8.28/7.70
COP	Cooling/Heating			3.04/3.72	3.01/3.61	3.01/3.46	3.08/3.66	3.04/3.64	3.02/3.64
Energy label	Cooling/Heating			B/A	B/A	B/B	B/A	B/A	B/A
Inrush current (Max. running current)		A		5(19)	5(22)	5(15)	5(19)	5(19)	5(22)
Sound pressure level*1 ※	Indoor*2	dB(A)		Hi:40 Me:37 Lo:35	Hi:42 Me:40 Lo:37	Hi:33 Me:31 Lo:30	Hi:35 Me:33 Lo:31	Hi:33 Me:31 Lo:30	Hi:33 Me:31 Lo:30
	Outdoor			57	Cooling:57 Heating:58	51	57	57	Cooling:57 Heating:58
Sound power level*1	Outdoor	dB(A)		74	74	73	74	74	74
Air flow ※	Indoor*2	CMM		Hi:27 Me:24 Lo:20	Hi:30 Me:27 Lo:23	Hi:18 Me:16 Lo:14	Hi:21 Me:19 Lo:17	Hi:18 Me:16 Lo:14	
	Outdoor			Cooling:150 Heating:145		Cooling:75 Heating:73	Cooling:150 Heating:145	Cooling:150 Heating:145	
Indoor unit: Exterior dimensions	Height x Width x Depth	mm		Unit:298x840x840 Panel:35x950x950		Unit:246x840x840 Panel:35x950x950			
Indoor unit: Net weight	Unit+Panel	kg		32.5(Unit:27 Panel:5.5)		27.5(Unit:22 Panel:5.5)	29.5(Unit:24 Panel:5.5)	27.5(Unit:22 Panel:5.5)	29.5(Unit:24 Panel:5.5)
Indoor unit: Panel				T-PSA-3BW-E					
Indoor unit: Air filter, Q'ty				Pocket Plastic net x1 (Washable)					
Indoor unit: Remote control(option)				Wired:RC-EX1A, RC-E5, RCH-E3 Wireless:RCN-T-36W-E					
Outdoor unit: Exterior dimensions	Height x Width x Depth	mm		1,300x970x370	1,505x970x370	845x970x370	1,300x970x370		1,505x970x370
Outdoor unit: Net weight		kg		122	140	83	122		140
Outdoor unit: Ref.amount precharged		kg(m)		5.4(30)	7.2(30)	3.8(30)	5.4(30)		7.2(30)
Outdoor unit: Ref.piping size	Liquid/Gas	ø		9.52/22.22	12.7/22.22	9.52/15.88	9.52/22.22		12.7/22.22
Range of usage: Ref.piping length		m		70		50	70		
Range of usage: Vertical height difference	O/U is higher	m		30					
Range of usage: Vertical height difference	O/U is lower	m		15					
Operating temperature range	Cooling	O/U		-15~43*3					
Operating temperature range	Heating	O/U		-15~20		-20~20	-15~20		

The data are measured under the following conditions(ISO-T1).
Cooling:Indoor temp. of 27˚CDB, 19˚CWB, and outdoor temp. of 35˚CDB. Heating:Indoor temp. of 20˚CDB, and outdoor temp. of 7˚CDB, 6˚CWB.
*1 : Indicates the value in an anechoic chamber. During operation these values are somewhat higher due to ambient conditions.
*2 : The values are for one indoor unit operation.
*3 : If a cooling operation is conducted when the outdoor air temperature is –5˚C or lower, the outdoor unit should be installed at a place where it is not influenced by natural wind. If wind blows, the low pressure will drop and compressor frequency will increase, this will cause the capacity to drop and may cause the unit to break down.

※Powerful-Hi can be selected. Sound level: 200/250VSPVF 51dB, 140VSTVF 39dB, 200VSTVF 46dB, 200VSDVF 39dB, 250VSDVF 46dB
Air flow: 200/250VSPVF 37CMM, 140VSTVF 20CMM, 200VSTVF 28CMM, 200VSDVF 20CMM, 250VSDVF 28CMM

CEILING CASSETTE -4way Compact (600 X 600mm)-

FDTC

Fits into standard 600 x 600 ceiling





FDTC 40/50/60VF

Remote control (Option)

Wired



RC-EX1A



RC-E5



RCH-E3

Wireless



RCN-TC-24W-ER

SPECIFICATIONS

The values are for simultaneous Multi operation.

				Hyper Inverter						
Set model name				FDTC71VNXPVF	FDTC100VNXPVF	FDTC125VNXPVF	FDTC140VNXTVF	FDTC100VSXPVF	FDTC125VSXPVF	FDTC140VSXTVF
				Twin			Triple	Twin		Triple
Indoor name				FDTC40VF	FDTC50VF	FDTC60VF	FDTC50VF	FDTC50VF	FDTC60VF	FDTC50VF
Outdoor name				FDC71VNX	FDC100VNX	FDC125VNX	FDC140VNX	FDC100VSX	FDC125VSX	FDC140VSX
Power source				1Phase 220-240V 50Hz, 1Phase 220V 60Hz				3Phase 380-415V 50Hz, 3Phase 380V 60Hz		
Nominal cooling capacity (Min~Max)	ISO-T1(JIS)	kW		7.1 (3.2~8.0)	10.0 (4.0~11.2)	12.5 (5.0~14.0)	14.0 (5.0~16.0)	10.0 (4.0~11.2)	12.5 (5.0~14.0)	14.0 (5.0~16.0)
Nominal heating capacity (Min~Max)	ISO-T1(JIS)	kW		8.0 (3.6~9.0)	11.2 (4.0~12.5)	14.0 (4.0~17.0)	16.0 (4.0~18.0)	11.2 (4.0~16.0)	14.0 (4.0~18.0)	16.0 (4.0~20.0)
Power consumption	Cooling/Heating	kW		2.04/2.21	3.18/3.20	4.10/4.10	4.34/4.34	3.18/3.20	4.10/4.10	4.34/4.34
COP	Cooling/Heating			3.48/3.62	3.14/3.50	3.05/3.41	3.23/3.69	3.14/3.50	3.05/3.41	3.23/3.69
Energy label	Cooling/Heating			A/A	B/B	B/B	A/A	B/B	B/B	A/A
Inrush current (Max. running current)		A		5(17)	5(24)	5(26)		5(15)		
Sound pressure level*1 ※	Indoor*2	dB(A)		Cooling : Hi:42 Me:36 Lo:30 Heating : Hi:42 Me:36 Lo:32		Cooling : Hi:46 Me:39 Lo:30 Heating : Hi:46 Me:39 Lo:32	Cooling : Hi:42 Me:36 Lo:30 Heating : Hi:42 Me:36 Lo:32		Cooling : Hi:46 Me:39 Lo:30 Heating : Hi:46 Me:39 Lo:32	Cooling : Hi:42 Me:36 Lo:30 Heating : Hi:42 Me:36 Lo:32
	Outdoor			Cooling:51 Heating:48	Cooling:48 Heating:50		Cooling:49 Heating:52	Cooling:48 Heating:50		Cooling:49 Heating:52
Sound power level*1	Outdoor	dB(A)		66	70	70	72	70	70	72
Air flow ※	Indoor*2	CMM		Cooling : Hi:11.5 Me:9 Lo:7 Heating : Hi:11.5 Me:9 Lo:8		Cooling : Hi:13.5 Me:10 Lo:7 Heating : Hi:13.5 Me:10 Lo:8	Cooling : Hi:11.5 Me:9 Lo:7 Heating : Hi:11.5 Me:9 Lo:8		Cooling : Hi:13.5 Me:10 Lo:7 Heating : Hi:13.5 Me:10 Lo:8	Cooling : Hi:11.5 Me:9 Lo:7 Heating : Hi:11.5 Me:9 Lo:8
	Outdoor			Cooling:60 Heating:50	100					
Indoor unit: Exterior dimensions	Height x Width x Depth	mm		Unit:248x570x570 Panel:35x700x700						
Indoor unit: Net weight	Unit+Panel	kg		18.5(Unit:15 Panel:3.5)						
Indoor unit: Panel				TC-PSA-25W-E						
Indoor unit: Air filter, Q'ty				Pocket Plastic net x1 (Washable)						
Indoor unit: Remote control(option)				Wired:RC-EX1A, RC-E5, RCH-E3 Wireless:RCN-TC-24W-ER						
Outdoor unit: Exterior dimensions	Height x Width x Depth	mm		750x880(+88)x340	1,300x970x370					
Outdoor unit: Net weight		kg		60	105					
Outdoor unit: Ref.amount precharged		kg(m)		2.95(30)	4.5(30)					
Outdoor unit: Ref.piping size	Liquid/Gas	ø		9.52/15.88						
Range of usage: Ref.piping length		m		50	100					
Range of usage: Vertical height difference	O/U is higher	m		30						
	O/U is lower	m		15						
Operating temperature range	Cooling	O/U		-15~43*3						
	Heating	O/U		-20~20						

The data are measured under the following conditions(ISO-T1).
Cooling:Indoor temp. of 27˚CDB, 19˚CWB, and outdoor temp. of 35˚CDB. Heating:Indoor temp. of 20˚CDB, and outdoor temp. of 7˚CDB, 6˚CWB.
*1 : Indicates the value in an anechoic chamber. During operation these values are somewhat higher due to ambient conditions.
*2 : The values are for one indoor unit operation.
*3 : If a cooling operation is conducted when the outdoor air temperature is –5˚C or lower, the outdoor unit should be installed at a place where it is not influenced by natural wind. If wind blows, the low pressure will drop and compressor frequency will increase, this will cause the capacity to drop and may cause the unit to break down.

※ Powerful-Hi can be selected. Sound level: 71/100/125VNXPVF 47dB, 100/125VSXPVF 47dB, 140VNXTVF 47dB, 140VSXTVF 47dB
Air flow: 71/100/125VNXPVF 13.5CMM, 100/125VSXPVF 13.5CMM, 140VNXTVF 13.5CMM, 140VSXTVF 13.5CMM

SPECIFICATIONS

The values are for simultaneous Multi operation.

Set model name				Micro Inverter		
				FDTC100VNPVF	FDTC125VNPVF	FDTC140VNTVF
				Twin		Triple
Indoor name				FDTC50VF	FDTC60VF	FDTC50VF
Outdoor name				FDC100VN	FDC125VN	FDC140VN
Power source				1Phase 220-240V 50Hz, 1Phase 220V 60Hz		
Nominal cooling capacity (Min~Max)	ISO-T1(JIS)		kW	10.0 (4.0~11.2)	12.5 (5.0~14.0)	14.0 (5.0~14.5)
Nominal heating capacity (Min~Max)	ISO-T1(JIS)		kW	11.2 (4.0~12.5)	14.0 (4.0~16.0)	16.0 (4.0~16.5)
Power consumption	Cooling/Heating		kW	3.25/3.26	5.35/4.62	4.64/4.52
COP	Cooling/Heating			3.08/3.44	2.34/3.03	3.02/3.54
Energy label	Cooling/Heating			B/B	F/D	B/B
Inrush current (Max. running current)			A	5(24)	5(27)	5(24)
Sound pressure level*1 ※	Indoor*2		dB(A)	Cooling : Hi:42 Me:36 Lo:30 Heating : Hi:42 Me:36 Lo:32	Cooling : Hi:46 Me:39 Lo:30 Heating : Hi:46 Me:39 Lo:32	Cooling : Hi:42 Me:36 Lo:30 Heating : Hi:42 Me:36 Lo:32
	Outdoor			49	Cooling:50 Heating:51	51
Sound power level*1	Outdoor		dB(A)	70	72	73
Air flow ※	Indoor*2		CMM	Cooling : Hi:11.5 Me:9 Lo:7 Heating : Hi:11.5 Me:9 Lo:8	Cooling : Hi:13.5 Me:10 Lo:7 Heating : Hi:13.5 Me:10 Lo:8	Cooling : Hi:11.5 Me:9 Lo:7 Heating : Hi:11.5 Me:9 Lo:8
	Outdoor			Cooling:75 Heating:73		
Indoor unit	Exterior dimensions	Height x Width x Depth	mm	Unit:248x570x570 Panel:35x700x700		
Indoor unit	Net weight	Unit+Panel	kg	18.5(Unit:15 Panel:3.5)		
Indoor unit	Panel			TC-PSA-25W-E		
Indoor unit	Air filter, Q'ty			Pocket Plastic net x1 (Washable)		
Indoor unit	Remote control(option)			Wired:RC-EX1A, RC-E5, RCH-E3 Wireless:RCN-TC-24W-ER		
Outdoor unit	Exterior dimensions	Height x Width x Depth	mm	845x970x370		
Outdoor unit	Net weight		kg	81		
Outdoor unit	Ref.amount precharged		kg(m)	3.8(30)		
Outdoor unit	Ref.piping size	Liquid/Gas	ø	9.52/15.88		
Range of usage	Ref.piping length		m	50		
Range of usage	Vertical height difference	O/U is higher	m	30		
Range of usage	Vertical height difference	O/U is lower	m	15		
Operating temperature range		Cooling	O/U	-15~43*3		
Operating temperature range		Heating	O/U	-20~20		

※Powerful-Hi can be selected. Sound level: 100/125VNPVF 47dB, 140VNTVF 47dB
Air flow: 100/125VNPVF 13.5CMM, 140VNTVF 13.5CMM

SPECIFICATIONS

The values are for simultaneous Multi operation.

Set model name				Micro Inverter				
				FDTC100VSPVF	FDTC125VSPVF	FDTC140VSTVF	FDTC200VSDVF	FDTC250VSDVF
				Twin		Triple	Double Twin	
Indoor name				FDTC50VF	FDTC60VF	FDTC50VF	FDTC50VF	FDTC60VF
Outdoor name				FDC100VS	FDC125VS	FDC140VS	FDC200VS	FDC250VS
Power source				3Phase 380-415V 50Hz, 3Phase 380V 60Hz				
Nominal cooling capacity (Min~Max)	ISO-T1(JIS)		kW	10.0 (4.0~11.2)	12.5 (5.0~14.0)	14.0 (5.0~14.5)	20.0 (7.0~22.4)	25.0 (10.0~28.0)
Nominal heating capacity (Min~Max)	ISO-T1(JIS)		kW	11.2 (4.0~12.5)	14.0 (4.0~16.0)	16.0 (4.0~16.5)	22.4 (7.6~25.0)	28.0 (9.5~31.5)
Power consumption	Cooling/Heating		kW	3.25/3.26	5.35/4.62	4.64/4.52	7.33/6.98	11.28/10.19
COP	Cooling/Heating			3.08/3.44	2.34/3.03	3.02/3.54	2.73/3.21	2.22/2.75
Energy label	Cooling/Heating			B/B	F/D	B/B	D/C	F/E
Inrush current (Max. running current)			A	5(15)	5(15)	5(15)	5(19)	5(22)
Sound pressure level*1 ※	Indoor*2		dB(A)	Cooling : Hi:42 Me:36 Lo:30 Heating : Hi:42 Me:36 Lo:32	Cooling : Hi:46 Me:39 Lo:30 Heating : Hi:46 Me:39 Lo:32	Cooling : Hi:42 Me:36 Lo:30 Heating : Hi:42 Me:36 Lo:32		Cooling : Hi:46 Me:39 Lo:30 Heating : Hi:46 Me:39 Lo:32
	Outdoor			49	Cooling:50 Heating:51	51	57	Cooling:57 Heating:58
Sound power level*1	Outdoor		dB(A)	70	72	73	74	74
Air flow ※	Indoor*2		CMM	Cooling : Hi:11.5 Me:9 Lo:7 Heating : Hi:11.5 Me:9 Lo:8	Cooling : Hi:13.5 Me:10 Lo:7 Heating : Hi:13.5 Me:10 Lo:8	Cooling : PHi:11.5 Me:9 Lo:7 Heating : Hi:11.5 Me:9 Lo:8		Cooling : Hi:13.5 Me:10 Lo:7 Heating : Hi:13.5 Me:10 Lo:8
	Outdoor			Cooling:75 Heating:73			Cooling:150 Heating:145	
Indoor unit	Exterior dimensions	Height x Width x Depth	mm	Unit:248x570x570 Panel:35x700x700				
Indoor unit	Net weight	Unit+Panel	kg	18.5(Unit:15 Panel:3.5)				
Indoor unit	Panel			TC-PSA-25W-E				
Indoor unit	Air filter, Q'ty			Pocket Plastic net x1 (Washable)				
Indoor unit	Remote control(option)			Wired:RC-EX1A, RC-E5, RCH-E3 Wireless:RCN-TC-24W-ER				
Outdoor unit	Exterior dimensions	Height x Width x Depth	mm	845x970x370			1,300x970x370	1,505x970x370
Outdoor unit	Net weight		kg	83			122	140
Outdoor unit	Ref.amount precharged		kg(m)	3.8(30)			5.4(30)	7.2(30)
Outdoor unit	Ref.piping size	Liquid/Gas	ø	9.52/15.88			9.52/22.22	12.7/22.22
Range of usage	Ref.piping length		m	50			70	
Range of usage	Vertical height difference	O/U is higher	m	30				
Range of usage	Vertical height difference	O/U is lower	m	15				
Operating temperature range		Cooling	O/U	-15~43*3				
Operating temperature range		Heating	O/U	-20~20			-15~20	

The data are measured under the following conditions(ISO-T1).
Cooling:Indoor temp. of 27˚CDB, 19˚CWB, and outdoor temp. of 35˚CDB. Heating:Indoor temp. of 20˚CDB, and outdoor temp. of 7˚CDB, 6˚CWB.
*1 : Indicates the value in an anechoic chamber. During operation these values are somewhat higher due to ambient conditions.
*2 : The values are for one indoor unit operation.
*3 : If a cooling operation is conducted when the outdoor air temperature is –5˚C or lower, the outdoor unit should be installed at a place where it is not influenced by natural wind. If wind blows, the low pressure will drop and compressor frequency will increase, this will cause the capacity to drop and may cause the unit to break down.

※Powerful-Hi can be selected. Sound level: 100/125VSPVF 47dB, 140VSTVF 47dB, 200/250VSDVF 47dB
Air flow: 100/125VSPVF 13.5CMM, 140VSTVF 13.5CMM, 200/250VSDVF 13.5CMM

DUCT CONNECTED -Low/Middle Static pressure-

FDUM

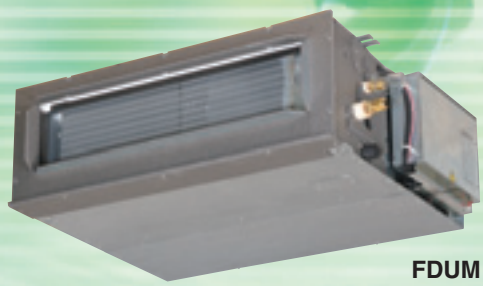

FDUM 50/60/71/
100/125VF



external static pressure loss:5pa

Filter kit (option)
UM-FL1EF : for 50
UM-FL2EF : for 60, 71
UM-FL3EF : for 100, 125

Remote control (Option)

Wired



RC-EX1A



RC-E5



RCH-E3

Wireless



RCN-KIT3-E

SPECIFICATIONS

The values are for simultaneous Multi operation.

				Hyper Inverter	
Set model name				FDUM100VNXPVF	FDUM125VNXPVF
				Twin	
Indoor name				FDUM50VF	FDUM60VF
Outdoor name				FDC100VNX	FDC125VNX
Power source				1Phase 220-240V 50Hz, 1Phase 220V 60Hz	
Nominal cooling capacity (Min~Max)	ISO-T1(JIS)		kW	10.0 (4.0~11.2)	12.5 (5.0~14.0)
Nominal heating capacity (Min~Max)	ISO-T1(JIS)		kW	11.2 (4.0~12.5)	14.0 (4.0~17.0)
Power consumption	Cooling/Heating		kW	2.66/3.02	3.26/3.66
COP	Cooling/Heating			3.76/3.71	3.83/3.83
Energy label	Cooling/Heating			A/A	A/A
Inrush current (Max. running current)			A	5(24)	5(26)
Sound pressure level*1 ※	Indoor*2		dB(A)	Hi:32 Me:29 Lo:26	Hi:31 Me:28 Lo:25
	Outdoor			Cooling:48 Heating:50	
Sound power level*1	Outdoor		dB(A)	70	70
Air flow ※	Indoor*2		CMM	Hi:10 Me:9 Lo:8	Hi:15 Me:13 Lo:10
	Outdoor			100	
Indoor unit: Exterior dimensions	Height x Width x Depth		mm	280x750x635	280x950x635
Indoor unit: Net weight			kg	29	34
Indoor unit: Air filter, Q'ty				Procure locally	
Indoor unit: Remote control(option)				Wired:RC-EX1A, RC-E5, RCH-E3 Wireless:RCN-KIT3-E	
Outdoor unit: Exterior dimensions	Height x Width x Depth		mm	1,300x970x370	
Outdoor unit: Net weight			kg	105	
Outdoor unit: Ref.amount precharged			kg(m)	4.5(30)	
Outdoor unit: Ref.piping size	Liquid/Gas		ø	9.52/15.88	
Range of usage: Ref.piping length			m	100	
Range of usage: Vertical height difference	O/U is higher		m	30	
Range of usage: Vertical height difference	O/U is lower		m	15	
Operating temperature range	Cooling		O/U	-15~43*3	
	Heating		O/U	-20~20	

SPECIFICATIONS

The values are for simultaneous Multi operation.

				Hyper Inverter					
Set model name				FDUM140VNXPVF	FDUM140VNXTVF	FDUM100VSXPVF	FDUM125VSXPVF	FDUM140VSXPVF	FDUM140VSXTVF
				Twin	Triple	Twin			Triple
Indoor name				FDUM71VF	FDUM50VF	FDUM50VF	FDUM60VF	FDUM71VF	FDUM50VF
Outdoor name				FDC140VNX	FDC140VNX	FDC100VSX	FDC125VSX	FDC140VSX	FDC140VSX
Power source				1Phase 220-240V 50Hz, 1Phase 220V 60Hz		3Phase 380-415V 50Hz, 3Phase 380V 60Hz			
Nominal cooling capacity (Min~Max)	ISO-T1(JIS)		kW	14.0 (5.0~14.5)	14.0 (5.0~14.5)	10.0 (4.0~11.2)	12.5 (5.0~14.0)	14.0 (5.0~14.5)	14.0 (5.0~14.5)
Nominal heating capacity (Min~Max)	ISO-T1(JIS)		kW	16.0 (4.0~18.0)	16.0 (4.0~18.0)	11.2 (4.0~16.0)	14.0 (4.0~18.0)	16.0 (4.0~20.0)	16.0 (4.0~20.0)
Power consumption	Cooling/Heating		kW	4.36/4.35	4.21/4.69	2.66/3.02	3.26/3.66	4.36/4.35	4.21/4.69
COP	Cooling/Heating			3.21/3.68	3.33/3.41	3.76/3.71	3.83/3.83	3.21/3.68	3.33/3.41
Energy label	Cooling/Heating			A/A	A/B	A/A	A/A	A/A	A/B
Inrush current (Max. running current)			A	5(26)		5(15)			
Sound pressure level*1 ※	Indoor*2		dB(A)	Hi:33 Me:29 Lo:25	Hi:32 Me:29 Lo:26	Hi:32 Me:29 Lo:26	Hi:31 Me:28 Lo:25	Hi:33 Me:29 Lo:25	Hi:32 Me:29 Lo:26
	Outdoor			Cooling:49 Heating:52	Cooling:49 Heating:52	Cooling:48 Heating:50		Cooling:49 Heating:52	Cooling:49 Heating:52
Sound power level*1	Outdoor		dB(A)	72	72	70	70	72	72
Air flow ※	Indoor*2		CMM	Hi:19 Me:15 Lo:10	Hi:10 Me:9 Lo:8	Hi:10 Me:9 Lo:8	Hi:15 Me:13 Lo:10	Hi:19 Me:15 Lo:10	Hi:10 Me:9 Lo:8
	Outdoor			100					
Indoor unit: Exterior dimensions	Height x Width x Depth		mm	280x950x635	280x750x635		280x950x635		280x750x635
Indoor unit: Net weight			kg	34	29		34		29
Indoor unit: Air filter, Q'ty				Procure locally					
Indoor unit: Remote control(option)				Wired:RC-EX1A, RC-E5, RCH-E3 Wireless:RCN-KIT3-E					
Outdoor unit: Exterior dimensions	Height x Width x Depth		mm	1,300x970x370					
Outdoor unit: Net weight			kg	105					
Outdoor unit: Ref.amount precharged			kg(m)	4.5(30)					
Outdoor unit: Ref.piping size	Liquid/Gas		ø	9.52/15.88					
Range of usage: Ref.piping length			m	100					
Range of usage: Vertical height difference	O/U is higher		m	30					
Range of usage: Vertical height difference	O/U is lower		m	15					
Operating temperature range	Cooling		O/U	-15~43*3					
	Heating		O/U	-20~20					

The data are measured under the following conditions(ISO-T1).
Cooling:Indoor temp. of 27˚CDB, 19˚CWB, and outdoor temp. of 35˚CDB. Heating:Indoor temp. of 20˚CDB, and outdoor temp. of 7˚CDB, 6˚CWB.
*1 : Indicates the value in an anechoic chamber. During operation these values are somewhat higher due to ambient conditions.
*2 : The values are for one indoor unit operation.
*3 : If a cooling operation is conducted when the outdoor air temperature is –5˚C or lower, the outdoor unit should be installed at a place where it is not influenced by natural wind. If wind blows, the low pressure will drop and compressor frequency will increase, this will cause the capacity to drop and may cause the unit to break down.

※ Powerful-Hi can be selected. Sound level: 100VN(S)XPVF 37dB, 125VN(S)XPVF 36dB, 140VN(S)XPVF 38dB, 140VN(S)XTVF 37dB
Air flow: 100VN(S)XPVF 13CMM, 125VN(S)XPVF 20CMM, 140VN(S)XPVF 24CMM, 140VN(S)XTVF 13CMM

SPECIFICATIONS

The values are for simultaneous Multi operation.

Set model name			Micro Inverter				
			FDUM100VNPVF	FDUM125VNPVF	FDUM140VNPVF	FDUM140VNTVF	FDUM100VSPVF
			Twin			Triple	Twin
Indoor name			FDUM50VF	FDUM60VF	FDUM71VF	FDUM50VF	FDUM50VF
Outdoor name			FDC100VN	FDC125VN	FDC140VN	FDC140VN	FDC100VS
Power source			1Phase 220-240V 50Hz, 1Phase 220V 60Hz				3Phase 380-415V 50Hz, 3Phase 380V 60Hz
Nominal cooling capacity (Min~Max)	ISO-T1(JIS)	kW	10.0 (4.0~11.2)	12.5 (5.0~14.0)	14.0 (5.0~14.5)	14.0 (5.0~14.5)	10.0 (4.0~11.2)
Nominal heating capacity (Min~Max)	ISO-T1(JIS)	kW	11.2 (4.0~12.5)	14.0 (4.0~16.0)	16.0 (4.0~16.5)	16.0 (4.0~16.5)	11.2 (4.0~12.5)
Power consumption	Cooling/Heating	kW	2.84/3.35	3.87/4.07	4.78/4.60	4.65/5.15	2.84/3.35
COP	Cooling/Heating		3.52/3.34	3.23/3.44	2.93/3.48	3.01/3.11	3.52/3.34
Energy label	Cooling/Heating		A/C	A/B	C/B	B/D	A/C
Inrush current (Max. running current)		A	5(24)				5(15)
Sound pressure level*1 ※	Indoor*2	dB(A)	Hi:32 Me:29 Lo:26	Hi:31 Me:28 Lo:25	Hi:33 Me:29 Lo:25	Hi:32 Me:29 Lo:26	
	Outdoor		49	Cooling:50 Heating:51	51		49
Sound power level*1	Outdoor	dB(A)	70	72	73	73	70
Air flow ※	Indoor*2	CMM	Hi:10 Me:9 Lo:8	Hi:15 Me:13 Lo:10	Hi:19 Me:15 Lo:10	Hi:10 Me:9 Lo:8	
	Outdoor		Cooling:75 Heating:73				
Indoor unit: Exterior dimensions	Height x Width x Depth	mm	280x750x635	280x950x635		280x750x635	
Indoor unit: Net weight		kg	29	34		29	
Indoor unit: Air filter, Q'ty			Procure locally				
Indoor unit: Remote control(option)			Wired:RC-EX1A, RC-E5, RCH-E3 Wireless:RCN-KIT3-E				
Outdoor unit: Exterior dimensions	Height x Width x Depth	mm	845x970x370				
Outdoor unit: Net weight		kg	81				83
Outdoor unit: Ref.amount precharged		kg(m)	3.8(30)				
Outdoor unit: Ref.piping size	Liquid/Gas	ø	9.52/15.88				
Range of usage: Ref.piping length		m	50				
Range of usage: Vertical height difference	O/U is higher	m	30				
Range of usage: Vertical height difference	O/U is lower	m	15				
Operating temperature range	Cooling	O/U	-15~43*3				
Operating temperature range	Heating	O/U	-20~20				

※ Powerful-Hi can be selected. Sound level: 100VN(S)PVF 37dB, 125VNPVF 36dB, 140VNPVF 38dB, 140VNTVF 37dB
Air flow: 100VN(S)PVF 13CMM, 125VNPVF 20CMM, 140VNPVF 24CMM, 140VNTVF 13CMM

SPECIFICATIONS

The values are for simultaneous Multi operation.

Set model name			Micro Inverter					
			FDUM125VSPVF	FDUM140VSPVF	FDUM200VSPVF	FDUM250VSPVF	FDUM140VSTVF	FDUM200VSTVF
			Twin				Triple	
Indoor name			FDUM60VF	FDUM71VF	FDUM100VF	FDUM125VF	FDUM50VF	FDUM71VF
Outdoor name			FDC125VS	FDC140VS	FDC200VS	FDC250VS	FDC140VS	FDC200VS
Power source			3Phase 380-415V 50Hz, 3Phase 380V 60Hz					
Nominal cooling capacity (Min~Max)	ISO-T1(JIS)	kW	12.5 (5.0~14.0)	14.0 (5.0~14.5)	20.0 (7.0~22.4)	25.0 (10.0~28.0)	14.0 (5.0~14.5)	20.0 (7.0~22.4)
Nominal heating capacity (Min~Max)	ISO-T1(JIS)	kW	14.0 (4.0~16.0)	16.0 (4.0~16.5)	22.4 (7.6~25.0)	28.0 (9.5~31.5)	16.0 (4.0~16.5)	22.4 (7.6~25.0)
Power consumption	Cooling/Heating	kW	3.87/4.07	4.78/4.60	6.86/7.22	9.05/8.51	4.65/5.15	6.57/6.26
COP	Cooling/Heating		3.23/3.44	2.93/3.48	2.92/3.10	2.76/3.29	3.01/3.11	3.04/3.58
Energy label	Cooling/Heating		A/B	C/B	C/D	D/C	B/D	B/B
Inrush current (Max. running current)		A	5(15)		5(19)	5(22)	5(15)	5(19)
Sound pressure level*1 ※	Indoor*2	dB(A)	Hi:31 Me:28 Lo:25	Hi:33 Me:29 Lo:25	Hi:38 Me:36 Lo:30	Hi:40 Me:34 Lo:29	Hi:32 Me:29 Lo:26	Hi:33 Me:29 Lo:25
	Outdoor		Cooling:50 Heating:51	51	57	Cooling:57 Heating:58	51	34
Sound power level*1	Outdoor	dB(A)	72	73	74	74	73	74
Air flow ※	Indoor*2	CMM	Hi:15 Me:13 Lo:10	Hi:19 Me:15 Lo:10	Hi:28 Me:25 Lo:19	Hi:32 Me:26 Lo:20	Hi:10 Me:9 Lo:8	Hi:19 Me:15 Lo:10
	Outdoor		Cooling:75 Heating:73		Cooling:150 Heating:145		Cooling:75 Heating:73	Cooling:150 Heating:145
Indoor unit: Exterior dimensions	Height x Width x Depth	mm	280x950x635		280x1,370x740		280x750x635	280x950x635
Indoor unit: Net weight		kg	34		54		29	34
Indoor unit: Air filter, Q'ty			Procure locally					
Indoor unit: Remote control(option)			Wired:RC-EX1A, RC-E5, RCH-E3 Wireless:RCN-KIT3-E					
Outdoor unit: Exterior dimensions	Height x Width x Depth	mm	845x970x370		1,300x970x370	1,505x970x370	845x970x370	1,300x970x370
Outdoor unit: Net weight		kg	83		122	140	83	122
Outdoor unit: Ref.amount precharged		kg(m)	3.8(30)		5.4(30)	7.2(30)	3.8(30)	5.4(30)
Outdoor unit: Ref.piping size	Liquid/Gas	ø	9.52/15.88		9.52/22.22	12.7/22.22	9.52/15.88	9.52/22.22
Range of usage: Ref.piping length		m	50		70		50	70
Range of usage: Vertical height difference	O/U is higher	m	30					
Range of usage: Vertical height difference	O/U is lower	m	15					
Operating temperature range	Cooling	O/U	-15~43*3					
Operating temperature range	Heating	O/U	-20~20		-15~20		-20~20	-15~20

The data are measured under the following conditions(ISO-T1).
Cooling:Indoor temp. of 27˚CDB, 19˚CWB, and outdoor temp. of 35˚CDB. Heating:Indoor temp. of 20˚CDB, and outdoor temp. of 7˚CDB, 6˚CWB. External static pressure of indoor units is 60Pa.

*1 : Indicates the value in an anechoic chamber. During operation these values are somewhat higher due to ambient conditions.

*2 : The values are for one indoor unit operation.

*3 : If a cooling operation is conducted when the outdoor air temperature is –5˚C or lower, the outdoor unit should be installed at a place where it is not influenced by natural wind. If wind blows, the low pressure will drop and compressor frequency will increase, this will cause the capacity to drop and may cause the unit to break down.

※ Powerful-Hi can be selected. Sound level: 125VSPVF 36dB, 140VSPVF 38dB, 200VSPVF 44dB, 250VSPVF 45dB, 140VSTVF 37dB, 200VSTVF 38dB
Air flow: 125VSPVF 20CMM, 140VSPVF 24CMM, 200VSPVF 36CMM, 250VSPVF 39CMM, 140VSTVF 13CMM, 200VSTVF 24CMM

CEILING SUSPENDED

FDEN



FDEN 40/50/60/71/100/125VF

Remote control (Option)

Wired



RC-EX1A



RC-E5



RCH-E3

Wireless



RCN-E1R

SPECIFICATIONS

The values are for simultaneous Multi operation.

				Hyper Inverter	
Set model name				FDEN71VNXPVF	FDEN100VNXPVF
				Twin	
Indoor name				FDEN40VF	FDEN50VF
Outdoor name				FDC71VNX	FDC100VNX
Power source				1Phase 220-240V 50Hz, 1Phase 220V 60Hz	
Nominal cooling capacity (Min~Max)	ISO-T1(JIS)		kW	7.1 (3.2~8.0)	10.0 (4.0~11.2)
Nominal heating capacity (Min~Max)	ISO-T1(JIS)		kW	8.0 (3.6~9.0)	11.2 (4.0~12.5)
Power consumption	Cooling/Heating		kW	2.08/2.40	3.02/3.49
COP	Cooling/Heating			3.41/3.33	3.31/3.21
Energy label	Cooling/Heating			A/C	A/C
Inrush current (Max. running current)			A	5(17)	5(24)
Sound pressure level*1 ※	Indoor*2		dB(A)	Hi:39 Me:38 Lo:37	
	Outdoor			Cooling:51 Heating:48	Cooling:48 Heating:50
Sound power level*1	Outdoor		dB(A)	66	70
Air flow ※	Indoor*2		CMM	Hi:10 Me:9 Lo:7	
	Outdoor			Cooling:60 Heating:50	100
Indoor unit: Exterior dimensions	Height x Width x Depth		mm	210x1,070x690	
Indoor unit: Net weight			kg	28	
Indoor unit: Air filter, Q'ty				Pocket Plastic net x2 (Washable)	
Indoor unit: Remote control(option)				Wired:RC-EX1A, RC-E5, RCH-E3 Wireless:RCN-E1R	
Outdoor unit: Exterior dimensions	Height x Width x Depth		mm	750X880(+88)X340	1,300x970x370
Outdoor unit: Net weight			kg	60	105
Outdoor unit: Ref.amount precharged			kg(m)	2.95(30)	4.5(30)
Outdoor unit: Ref.piping size	Liquid/Gas		ø	9.52/15.88	
Range of usage: Ref.piping length			m	50	100
Range of usage: Vertical height difference	O/U is higher		m	30	
	O/U is lower		m	15	
Operating temperature range	Cooling		O/U	-15~43*3	
	Heating		O/U	-20~20	

SPECIFICATIONS

The values are for simultaneous Multi operation.

				Hyper Inverter						
Set model name				FDEN125VNXPVF	FDEN140VNXPVF	FDEN140VNXTVF	FDEN100VSXPVF	FDEN125VSXPVF	FDEN140VSXPVF	FDEN140VSXTVF
				Twin		Triple		Twin		Triple
Indoor name				FDEN60VF	FDEN71VF	FDEN50VF	FDEN50VF	FDEN60VF	FDEN71VF	FDEN50VF
Outdoor name				FDC125VNX	FDC140VNX	FDC140VNX	FDC100VSX	FDC125VSX	FDC140VSX	FDC140VSX
Power source				1Phase 220-240V 50Hz, 1Phase 220V 60Hz			3Phase 380-415V 50Hz, 3Phase 380V 60Hz			
Nominal cooling capacity (Min~Max)	ISO-T1(JIS)		kW	12.5 (5.0~14.0)	14.0 (5.0~16.0)	14.0 (5.0~16.0)	10.0 (4.0~11.2)	12.5 (5.0~14.0)	14.0 (5.0~16.0)	14.0 (5.0~16.0)
Nominal heating capacity (Min~Max)	ISO-T1(JIS)		kW	14.0 (4.0~17.0)	16.0 (4.0~18.0)	16.0 (4.0~18.0)	11.2 (4.0~16.0)	14.0 (4.0~18.0)	16.0 (4.0~20.0)	16.0 (4.0~20.0)
Power consumption	Cooling/Heating		kW	4.06/3.70	4.96/4.58	4.90/4.53	3.02/3.49	4.06/3.70	4.96/4.58	4.90/4.53
COP	Cooling/Heating			3.08/3.78	2.82/3.49	2.86/3.53	3.31/3.21	3.08/3.78	2.82/3.49	2.86/3.53
Energy label	Cooling/Heating			B/A	C/B	C/B	A/C	B/A	C/B	C/B
Inrush current (Max. running current)			A	5(26)				5(15)		
Sound pressure level*1 ※	Indoor*2		dB(A)	Hi:41 Me:39 Lo:38		Hi:39 Me:38 Lo:37		Hi:41 Me:39 Lo:38		Hi:39 Me:38 Lo:37
	Outdoor			Cooling:48 Heating:50	Cooling:49 Heating:52	Cooling:49 Heating:52	49	Cooling:48 Heating:50	Cooling:49 Heating:52	Cooling:49 Heating:52
Sound power level*1	Outdoor		dB(A)	70	72	72	70	70	72	72
Air flow ※	Indoor*2		CMM	Hi:16 Me:14 Lo:12		Hi:10 Me:9 Lo:7		Hi:16 Me:14 Lo:12		Hi:10 Me:9 Lo:7
	Outdoor			100						
Indoor unit: Exterior dimensions	Height x Width x Depth		mm	210x1,320x690		210x1,070x690		210x1,320x690		210x1,070x690
Indoor unit: Net weight			kg	37		28		37		28
Indoor unit: Air filter, Q'ty				Pocket Plastic net x2 (Washable)						
Indoor unit: Remote control(option)				Wired:RC-EX1A, RC-E5, RCH-E3 Wireless:RCN-E1R						
Outdoor unit: Exterior dimensions	Height x Width x Depth		mm	1,300x970x370						
Outdoor unit: Net weight			kg	105						
Outdoor unit: Ref.amount precharged			kg(m)	4.5(30)						
Outdoor unit: Ref.piping size	Liquid/Gas		ø	9.52/15.88						
Range of usage: Ref.piping length			m	100						
Range of usage: Vertical height difference	O/U is higher		m	30						
	O/U is lower		m	15						
Operating temperature range	Cooling		O/U	-15~43*3						
	Heating		O/U	-20~20						

The data are measured under the following conditions(ISO-T1).
Cooling:Indoor temp. of 27˚CDB, 19˚CWB, and outdoor temp. of 35˚CDB. Heating:Indoor temp. of 20˚CDB, and outdoor temp. of 7˚CDB, 6˚CWB.
*1 : Indicates the value in an anechoic chamber. During operation these values are somewhat higher due to ambient conditions.
*2 : The values are for one indoor unit operation.
*3 : If a cooling operation is conducted when the outdoor air temperature is –5˚C or lower, the outdoor unit should be installed at a place where it is not influenced by natural wind. If wind blows, the low pressure will drop and compressor frequency will increase, this will cause the capacity to drop and may cause the unit to break down.

※ Powerful-Hi can be selected. Sound level: 71/100VNXPVF 46dB, 100VSXPVF 46dB, 125VNXPVF 48dB, 140VNXPVF 50dB, 125VSXPVF 48dB, 140VSXPVF 50dB, 140VNXTVF 46dB, 140VSXTVF 46dB
Air flow: 71/100VNXPVF 13CMM, 100VSXPVF 13CMM, 125/140VNXPVF 22CMM, 125/140VSXPVF 22CMM, 140VNXTVF 13CMM, 140VSXTVF 13CMM

SPECIFICATIONS

The values are for simultaneous Multi operation.

Set model name				Micro Inverter					
				FDEN100VNPVF	FDEN125VNPVF	FDEN140VNPVF	FDEN140VNTVF	FDEN100VSPVF	FDEN125VSPVF
				Twin			Triple	Twin	
Indoor name				FDEN50VF	FDEN60VF	FDEN71VF	FDEN50VF	FDEN50VF	FDEN60VF
Outdoor name				FDC100VN	FDC125VN	FDC140VN	FDC140VN	FDC100VS	FDC125VS
Power source				1Phase 220-240V 50Hz, 1Phase 220V 60Hz				3Phase 380-415V 50Hz, 3Phase 380V 60Hz	
Nominal cooling capacity (Min~Max)	ISO-T1(JIS)	kW		10.0 (4.0~11.2)	12.5 (5.0~14.0)	14.0 (5.0~14.5)	14.0 (5.0~14.5)	10.0 (4.0~11.2)	12.5 (5.0~14.0)
Nominal heating capacity (Min~Max)	ISO-T1(JIS)	kW		11.2 (4.0~12.5)	14.0 (4.0~16.0)	16.0 (4.0~16.5)	16.0 (4.0~16.5)	11.2 (4.0~12.5)	14.0 (4.0~16.0)
Power consumption	Cooling/Heating	kW		3.12/3.49	4.23/3.83	4.87/4.59	4.88/4.58	3.12/3.49	4.23/3.83
COP	Cooling/Heating			3.21/3.21	2.96/3.66	2.87/3.49	2.87/3.49	3.21/3.21	2.96/3.66
Energy label	Cooling/Heating			A/C	C/A	C/B	C/B	A/C	C/A
Inrush current (Max. running current)		A			5(24)			5(15)	
Sound pressure level*1 ※	Indoor*2	dB(A)		Hi:39 Me:38 Lo:37	Hi:41 Me:39 Lo:38		Hi:39 Me:38 Lo:37		Hi:41 Me:39 Lo:38
	Outdoor			49	Cooling:50 Heating:51	51		49	Cooling:50 Heating:51
Sound power level*1	Outdoor	dB(A)		70	72	73	73	70	72
Air flow ※	Indoor*2	CMM		Hi:10 Me:9 Lo:7	Hi:16 Me:14 Lo:12		Hi:10 Me:9 Lo:7		Hi:16 Me:14 Lo:12
	Outdoor			Cooling:75 Heating:73					
Indoor unit: Exterior dimensions	Height x Width x Depth	mm		210x1,070x690	210x1,320x690		210x1,070x690		210x1,320x690
Indoor unit: Net weight		kg		28	37		28		37
Indoor unit: Air filter, Q'ty				Pocket Plastic net x2 (Washable)					
Indoor unit: Remote control(option)				Wired:RC-EX1A, RC-E5, RCH-E3 Wireless:RCN-E1R					
Outdoor unit: Exterior dimensions	Height x Width x Depth	mm		845x970x370					
Outdoor unit: Net weight		kg		81				83	
Outdoor unit: Ref.amount precharged		kg(m)		3.8(30)					
Outdoor unit: Ref.piping size	Liquid/Gas	ø		9.52/15.88					
Range of usage: Ref.piping length		m		50					
Range of usage: Vertical height difference	O/U is higher	m		30					
Range of usage: Vertical height difference	O/U is lower	m		15					
Operating temperature range	Cooling	O/U		-15~43*3					
Operating temperature range	Heating	O/U		-20~20					

※ Powerful-Hi can be selected. Sound level: 100VNPVF 46dB, 125VNPVF 48dB, 140VNPVF 50dB, 140VNTVF 46dB, 100VSPVF 46dB, 125VSPVF 48dB
Air flow: 100VNPVF 13CMM, 125/140VNPVF 22CMM, 140VNTVF 13CMM, 100VSPVF 13CMM, 125VSPVF 22CMM

SPECIFICATIONS

The values are for simultaneous Multi operation.

Set model name				Micro Inverter						
				FDEN140VSPVF	FDEN200VSPVF	FDEN250VSPVF	FDEN140VSTVF	FDEN200VSTVF	FDEN200VSDVF	FDEN250VSDVF
				Twin			Triple		Double Twin	
Indoor name				FDEN71VF	FDEN100VF	FDEN125VF	FDEN50VF	FDEN71VF	FDEN50VF	FDEN60VF
Outdoor name				FDC140VS	FDC200VS	FDC250VS	FDC140VS	FDC200VS	FDC200VS	FDC250VS
Power source				3Phase 380-415V 50Hz, 3Phase 380V 60Hz						
Nominal cooling capacity (Min~Max)	ISO-T1(JIS)	kW		14.0 (5.0~14.5)	20.0 (7.0~22.4)	25.0 (10.0~28.0)	14.0 (5.0~14.5)	20.0 (7.0~22.4)	20.0 (7.0~22.4)	25.0 (10.0~28.0)
Nominal heating capacity (Min~Max)	ISO-T1(JIS)	kW		16.0 (4.0~16.5)	22.4 (7.6~25.0)	28.0 (9.5~31.5)	16.0 (4.0~16.5)	22.4 (7.6~25.0)	22.4 (7.6~25.0)	28.0 (9.5~31.5)
Power consumption	Cooling/Heating	kW		4.87/4.59	6.47/5.97	9.01/8.05	4.88/4.58	6.40/5.90	7.43/7.26	9.50/8.69
COP	Cooling/Heating			2.87/3.49	3.09/3.75	2.77/3.48	2.87/3.49	3.13/3.80	2.69/3.09	2.63/3.22
Energy label	Cooling/Heating			C/B	B/A	D/B	C/B	B/A	D/D	D/C
Inrush current (Max. running current)		A		5(15)	5(19)	5(22)	5(15)	5(19)		5(22)
Sound pressure level*1 ※	Indoor*2	dB(A)		Hi:41 Me:39 Lo:38	Hi:44 Me:41 Lo:39	Hi:46 Me:44 Lo:43	Hi:39 Me:38 Lo:37	Hi:41 Me:39 Lo:38	Hi:39 Me:38 Lo:37	Hi:41 Me:39 Lo:38
	Outdoor			51	57	Cooling:57 Heating:58	51	57		Cooling:57 Heating:58
Sound power level*1	Outdoor	dB(A)		73	74	74	73	74	74	74
Air flow ※	Indoor*2	CMM		Hi:16 Me:14 Lo:12	Hi:26 Me:23 Lo:21	Hi:29 Me:26 Lo:23	Hi:10 Me:9 Lo:7	Hi:16 Me:14 Lo:12	Hi:10 Me:9 Lo:7	Hi:16 Me:14 Lo:12
	Outdoor			Cooling:75 Heating:73	Cooling:150 Heating:145		Cooling:75 Heating:73	Cooling:150 Heating:145		
Indoor unit: Exterior dimensions	Height x Width x Depth	mm		210x1,320x690	250x1,620x690		210x1,070x690	210x1,320x690	210x1,070x690	210x1,320x690
Indoor unit: Net weight		kg		37	49		28	37	28	37
Indoor unit: Air filter, Q'ty				Pocket Plastic net x2 (Washable)						
Indoor unit: Remote control(option)				Wired:RC-EX1A, RC-E5, RCH-E3 Wireless:RCN-E1R						
Outdoor unit: Exterior dimensions	Height x Width x Depth	mm		845x970x370	1,300x970x370	1,505x970x370	845x970x370	1,300x970x370		1,505x970x370
Outdoor unit: Net weight		kg		83	122	140	83	122		140
Outdoor unit: Ref.amount precharged		kg(m)		3.8(30)	5.4(30)	7.2(30)	3.8(30)	5.4(30)		7.2(30)
Outdoor unit: Ref.piping size	Liquid/Gas	ø		9.52/15.88	9.52/22.22	12.7/22.22	9.52/15.88	9.52/22.22		12.7/22.2
Range of usage: Ref.piping length		m		50	70		50	70		
Range of usage: Vertical height difference	O/U is higher	m		30						
Range of usage: Vertical height difference	O/U is lower	m		15						
Operating temperature range	Cooling	O/U		-15~43*3						
Operating temperature range	Heating	O/U		-20~20	-15~20		-20~20	-15~20		

The data are measured under the following conditions(ISO-T1).
Cooling:Indoor temp. of 27˚CDB, 19˚CWB, and outdoor temp. of 35˚CDB. Heating:Indoor temp. of 20˚CDB, and outdoor temp. of 7˚CDB, 6˚CWB.
*1 : Indicates the value in an anechoic chamber. During operation these values are somewhat higher due to ambient conditions.
*2 : The values are for one indoor unit operation.
*3 : If a cooling operation is conducted when the outdoor air temperature is –5˚C or lower, the outdoor unit should be installed at a place where it is not influenced by natural wind. If wind blows, the low pressure will drop and compressor frequency will increase, this will cause the capacity to drop and may cause the unit to break down.

※ Powerful-Hi can be selected. Sound level: 140VSPVF 50dB, 200VSPVF 46dB, 250VSPVF 50dB, 140VSTVF 46dB, 200VSTVF 50dB, 200VSDVF 46dB, 250VSDVF 48dB
Air flow: 140VSPVF 22CMM, 200VSPVF 28CMM, 250VSPVF 32CMM, 140VSTVF 13CMM, 200VSTVF 22CMM, 200VSDVF 13CMM, 250VSDVF 22CMM

WALL MOUNTED

SRK

Only used with outdoor units of TWIN, TRIPLE, MULTI System.





SRK 50/60ZJX-S1

Wired remote control (Option)



RC-E5



RCH-E3

Point 1 Jet Air Scroll

We used the same aerodynamic analysis technology as used in developing jet engines.

CFD (computational fluid dynamics), used in blade shape design of air channels in air conditioners to develop the ideal air channel system (air circulation). The airflow of the jets created in this system enable a large volume of air to be blown with minimum power consumption, yet the air flow is uniform, quiet and reaches points a long distance from the blower.



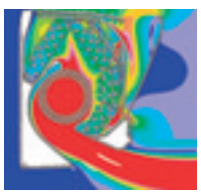

Fast ← → Slow

Colors in the figure show the air speed.

Max four indoor units are connectable.

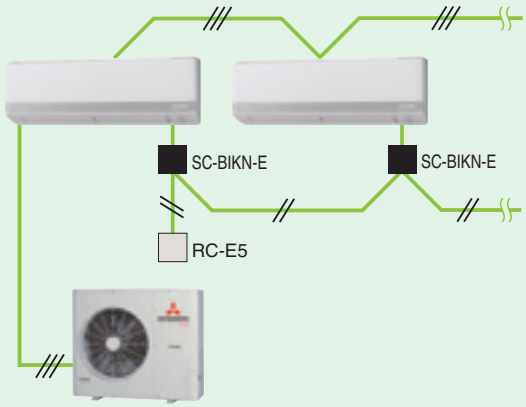

Point 2 Long Reach Air Flow

Powerful airflow is realized by Jet technology.
Good for large living rooms and shops.
Increase your comfort.

SRK50/60ZJX-S1
(in cooling operation)



Outline drawing (Unit:mm)

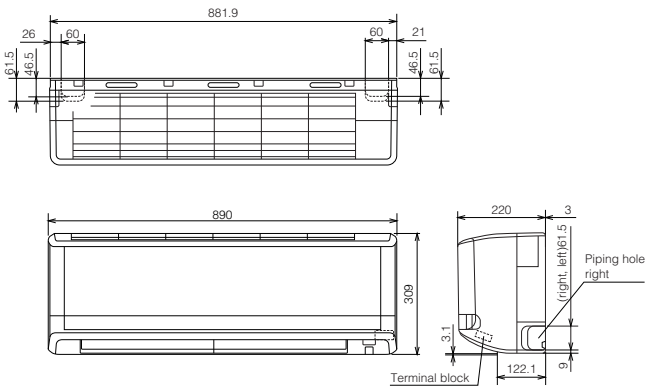

SPECIFICATIONS

The values are for simultaneous Multi operation.

Set model name				Hyper Inverter					
				SRK100VNXPZJX	SRK125VNXPZJX	SRK140VNXTZJX	SRK100VSXPZJX	SRK125VSXPZJX	SRK140VSXTZJX
				Twin		Triple	Twin		Triple
Indoor name				SRK50ZJX-S1	SRK60ZJX-S1	SRK50ZJX-S1	SRK50ZJX-S1	SRK60ZJX-S1	SRK50ZJX-S1
Outdoor name				FDC100VNX	FDC125VNX	FDC140VNX	FDC100VSX	FDC125VSX	FDC140VSX
Power source				1Phase 220-240 50Hz, 1Phase 220V 60Hz			3Phase 380-415 50Hz, 3Phase 380V 60Hz		
Nominal cooling capacity (Min~Max)	ISO-T1(JIS)		kW	10.0 (4.0~11.2)	12.5 (5.0~14.0)	14.0 (5.0~16.0)	10.0 (4.0~11.2)	12.5 (5.0~14.0)	14.0 (5.0~16.0)
Nominal heating capacity (Min~Max)	ISO-T1(JIS)		kW	11.2 (4.0~12.5)	14.0 (4.0~17.0)	16.0 (4.0~18.0)	11.2 (4.0~16.0)	14.0 (4.0~18.0)	16.0 (4.0~20.0)
Power consumption	Cooling/Heating		kW	2.66/2.60	3.60/3.48	3.98/3.68	2.66/2.60	3.60/3.48	3.98/3.68
COP	Cooling/Heating			3.76/4.31	3.47/4.02	3.52/4.35	3.76/4.31	3.47/4.02	3.52/4.35
Energy label	Cooling/Heating			A/A	A/A	A/A	A/A	A/A	A/A
Inrush current (Max. running current)			A	5 (24)			5 (15)		
Sound pressure level*1	Indoor*2	Cooling	dB(A)	Hi:47 Me:42 Lo:29	Hi:51 Me:43 Lo:32	Hi:47 Me:42 Lo:29	Hi:47 Me:42 Lo:29	Hi:51 Me:43 Lo:32	Hi:47 Me:42 Lo:29
		Heating		Hi:48 Me:42 Lo:36	Hi:48 Me:44 Lo:36	Hi:48 Me:42 Lo:36	Hi:48 Me:42 Lo:36	Hi:48 Me:44 Lo:36	Hi:48 Me:42 Lo:36
	Outdoor			Cooling:48 Heating:50		Cooling:49 Heating:52	Cooling:48 Heating:50		Cooling:49 Heating:52
Sound power level*1	Outdoor		dB(A)	70	70	72	70	70	72
Air flow	Indoor*2	Cooling	CMM	Hi:13.5 Me:11 Lo:8	Hi:14.5 Me:12.5 Lo:8.5	Hi:13.5 Me:11 Lo:8	Hi:13.5 Me:11 Lo:8	Hi:14.5 Me:12.5 Lo:8.5	Hi:13.5 Me:11 Lo:8
		Heating		Hi:17.0 Me:14.5 Lo:10.5	Hi:17.5 Me:15 Lo:11	Hi:17.0 Me:14.5 Lo:10.5	Hi:17.0 Me:14.5 Lo:10.5	Hi:17.5 Me:15 Lo:11	Hi:17.0 Me:14.5 Lo:10.5
	Outdoor			100					
Indoor unit: Exterior dimensions	Height x Width x Depth		mm	309x890x220					
Indoor unit: Net weight			kg	15					
Indoor unit: Air filter, Q'ty				Polypropylene net x2 (Washable)					
Indoor unit: Remote control(option)				Wired:RC-E5, RCH-E3 & Interface kit:SC-BIKN-E					
Outdoor unit: Exterior dimensions	Height x Width x Depth		mm	1,300x970x370					
Outdoor unit: Net weight			kg	105					
Outdoor unit: Ref.amount precharged			kg(m)	4.5(30)					
Outdoor unit: Ref.piping size	Liquid/Gas		ø	9.52/15.88					
Range of usage: Ref.piping length			m	100					
Range of usage: Vertical height difference	O/U is higher		m	30					
Range of usage: Vertical height difference	O/U is lower		m	15					
Operating temperature range	Cooling		O/U	-15~43*3					
Operating temperature range	Heating		O/U	-20~20					

SPECIFICATIONS

The values are for simultaneous Multi operation.

Set model name				Micro Inverter					
				SRK100VNPZJX	SRK125VNPZJX	SRK140VNTZJX	SRK100VSPZJX	SRK125VSPZJX	SRK140VSTZJX
				Twin		Triple	Twin		Triple
Indoor name				SRK50ZJX-S1	SRK60ZJX-S1	SRK50ZJX-S1	SRK50ZJX-S1	SRK60ZJX-S1	SRK50ZJX-S1
Outdoor name				FDC100VN	FDC125VN	FDC140VN	FDC100VS	FDC125VS	FDC140VS
Power source				1Phase 220-240 50Hz, 1Phase 220V 60Hz			3Phase 380-415 50Hz, 3Phase 380V 60Hz		
Nominal cooling capacity (Min~Max)	ISO-T1(JIS)		kW	10.0 (4.0~11.2)	12.5 (5.0~14.0)	14.0 (5.0~14.5)	10.0 (4.0~11.2)	12.5 (5.0~14.0)	14.0 (5.0~14.5)
Nominal heating capacity (Min~Max)	ISO-T1(JIS)		kW	11.2 (4.0~12.5)	14.0 (4.0~16.0)	16.0 (4.0~16.5)	11.2 (4.0~12.5)	14.0 (4.0~16.0)	16.0 (4.0~16.5)
Power consumption	Cooling/Heating		kW	2.72/2.86	4.25/4.29	4.53/4.05	2.72/2.86	4.25/4.29	4.53/4.05
COP	Cooling/Heating			3.62/3.92	2.94/3.26	3.09/3.95	3.62/3.92	2.94/3.26	3.09/3.95
Energy label	Cooling/Heating			A/A	C/C	B/A	A/A	C/C	B/A
Inrush current (Max. running current)			A	5 (24)			5 (15)		
Sound pressure level*1	Indoor*2	Cooling	dB(A)	Hi:47 Me:42 Lo:29	Hi:51 Me:43 Lo:32	Hi:47 Me:42 Lo:29	Hi:47 Me:42 Lo:29	Hi:51 Me:43 Lo:32	Hi:47 Me:42 Lo:29
		Heating		Hi:48 Me:42 Lo:36	Hi:48 Me:44 Lo:36	Hi:48 Me:42 Lo:36	Hi:48 Me:42 Lo:36	Hi:48 Me:44 Lo:36	Hi:48 Me:42 Lo:36
	Outdoor			49	Cooling:50,Heating:51	51	49	Cooling:50,Heating:51	51
Sound power level*1	Outdoor		dB(A)	70	72	73	70	72	73
Air flow	Indoor*2	Cooling	CMM	Hi:13.5 Me:11 Lo:8	Hi:14.5 Me:12.5 Lo:8.5	Hi:13.5 Me:11 Lo:8	Hi:13.5 Me:11 Lo:8	Hi:14.5 Me:12.5 Lo:8.5	Hi:13.5 Me:11 Lo:8
		Heating		Hi:17.0 Me:14.5 Lo:10.5	Hi:17.5 Me:15 Lo:11	Hi:17.0 Me:14.5 Lo:10.5	Hi:17.0 Me:14.5 Lo:10.5	Hi:17.5 Me:15 Lo:11	Hi:17.0 Me:14.5 Lo:10.5
	Outdoor			Cooling:75,Heating:73					
Indoor unit: Exterior dimensions	Height x Width x Depth		mm	309x890x220					
Indoor unit: Net weight			kg	15					
Indoor unit: Air filter, Q'ty				Polypropylene net x2 (Washable)					
Indoor unit: Remote control(option)				Wired:RC-E5, RCH-E3 & Interface kit:SC-BIKN-E					
Outdoor unit: Exterior dimensions	Height x Width x Depth		mm	845x970x370					
Outdoor unit: Net weight			kg	81			83		
Outdoor unit: Ref.amount precharged			kg(m)	3.8(30)					
Outdoor unit: Ref.piping size	Liquid/Gas		ø	9.52/15.88					
Range of usage: Ref.piping length			m	50					
Range of usage: Vertical height difference	O/U is higher		m	30					
Range of usage: Vertical height difference	O/U is lower		m	15					
Operating temperature range	Cooling		O/U	-15~43*3					
Operating temperature range	Heating		O/U	-20~20					

The data are measured under the following conditions (ISO-T1).
Cooling:Indoor temp. of 27˚CDB, 19˚CWB, and outdoor temp. of 35˚CDB.
Heating:Indoor temp. of 20˚CDB, and outdoor temp. of 7˚CDB, 6˚CWB.
*1 : Indicates the value in an anechoic chamber. During operation these values are somewhat higher due to ambient conditions.
*2 : The values are for one indoor unit operation.
*3 : If a cooling operation is conducted when the outdoor air temperature is –5˚C or lower, the outdoor unit should be installed at a place where it is not influenced by natural wind. If wind blows, the low pressure will drop and compressor frequency will increase, this will cause the capacity to drop and may cause the unit to break down.

MULTI [INDOOR UNIT]

FLOOR STANDING

FDF



FDF 71/100/125VD

Wireless remote control (Option)



RCN-KIT3-E

SPECIFICATIONS

The values are for simultaneous Multi operation.

				Hyper Inverter	
Set model name				FDF140VNXPVD	FDF140VSXPVD
				Twin	
Indoor name				FDF71VD	FDF71VD
Outdoor name				FDC140VNX	FDC140VSX
Power source				1Phase 220-240V 50Hz 1Phase 220V 60Hz	3Phase 380-415V 50Hz 3Phase 380V 60Hz
Nominal cooling capacity (Min~Max)	ISO-T1(JIS)	kW		14.0 (5.0~16.0)	
Nominal heating capacity (Min~Max)	ISO-T1(JIS)	kW		16.0 (4.0~18.0)	16.0 (4.0~20.0)
Power consumption	Cooling/Heating	kW		4.83/4.97	
COP	Cooling/Heating			2.90/3.22	
Energy label	Cooling/Heating			C/C	
Inrush current (Max. running current)		A		5(26)	5(15)
Sound pressure level*1 ※	Indoor*2	dB(A)		Hi:39 Me:35 Lo:33	
	Outdoor			Cooling:49 Heating:52	
Sound power level*1	Outdoor	dB(A)		72	
Air flow ※	Indoor*2	CMM		Hi:16 Me:14 Lo:12	
	Outdoor			100	
Indoor unit: Exterior dimensions	Height x Width x Depth	mm		1850x600x320	
Indoor unit: Net weight		kg		49	
Indoor unit: Air filter, Q'ty				Plastic net x1(washable)	
Indoor unit: Remote control(option)				wired:RC-E4 installed wireless:RCN-KIT3-E	
Outdoor unit: Exterior dimensions	Height x Width x Depth	mm		1300x970x370	
Outdoor unit: Net weight		kg		105	
Outdoor unit: Type of compressor				Rotary	
Outdoor unit: Ref.amount precharged	Liquid/Gas	kg(m)		4.5(30)	
Outdoor unit: Ref.piping size		ø		9.52/15.88	
Range of usage: Ref.piping length		m		100	
Range of usage: Vertical height difference	O/U is higher	m		30	
Range of usage: Vertical height difference	O/U is lower	m		15	
Operating temperature range	Cooling	O/U		-15~43*3	
	Heating	O/U		-20~20	

SPECIFICATIONS

The values are for simultaneous Multi operation.

				Micro Inverter			
Set model name				FDF140VNPVD	FDF140VSPVD	FDF200VSPVD	FDF250VSPVD
				Twin			
Indoor name				FDF71VD	FDF71VD	FDF100VD	FDF125VD
Outdoor name				FDC140VN	FDC140VS	FDC200VS	FDC250VS
Power source				1Phase 220-240V 50Hz 1Phase 220V 60Hz	3Phase 380-415V 50Hz 3Phase 380V 60Hz		
Nominal cooling capacity (Min~Max)	ISO-T1(JIS)	kW		14.0 (5.0~14.5)		20.0 (7.0~22.4)	25.0 (10.0~28.0)
Nominal heating capacity (Min~Max)	ISO-T1(JIS)	kW		16.0 (4.0~16.5)		22.4 (7.6~25.0)	28.0 (9.5~31.5)
Power consumption	Cooling/Heating	kW		5.16/5.01		6.50/6.42	8.95/9.17
COP	Cooling/Heating			2.71/3.19		3.08/3.49	2.79/3.05
Energy label	Cooling/Heating			D/C		B/B	D/D
Inrush current (Max. running current)		A		5(24)	5(15)	5(19)	5(22)
Sound pressure level*1 ※	Indoor*2	dB(A)		Hi:39 Me:35 Lo:33		Hi:50 Me:48 Lo:44	
	Outdoor			51		57	Cooling:57 Heating:58
Sound power level*1	Outdoor	dB(A)		73	73	74	74
Air flow ※	Indoor*2	CMM		Hi:16 Me:14 Lo:12		Hi:26 Me:23 Lo:19	
	Outdoor			Cooling:75 Heating:73		Cooling:150 Heating:145	
Indoor unit: Exterior dimensions	Height x Width x Depth	mm		1850x600x320			
Indoor unit: Net weight		kg		49		52	
Indoor unit: Air filter, Q'ty				Plastic net x1(washable)			
Indoor unit: Remote control(option)				wired:RC-E4 installed wireless:RCN-KIT3-E			
Outdoor unit: Exterior dimensions	Height x Width x Depth	mm		845x970x370		1300x970x370	1505x970x370
Outdoor unit: Net weight		kg		81	83	122	140
Outdoor unit: Type of compressor				Rotary		Scroll	
Outdoor unit: Ref.amount precharged	Liquid/Gas	kg(m)		3.8(30)		5.4(30)	7.2(30)
Outdoor unit: Ref.piping size		ø		9.52/15.88		9.52/22.22	12.7/22.22
Range of usage: Ref.piping length		m		50		70	
Range of usage: Vertical height difference	O/U is higher	m		30			
Range of usage: Vertical height difference	O/U is lower	m		15			
Operating temperature range	Cooling	O/U		-15~43*3			
	Heating	O/U		-20~20			

The data are measured under the following conditions(ISO-T1).
Cooling:Indoor temp. of 27˚CDB, 19˚CWB, and outdoor temp. of 35˚CDB. Heating:Indoor temp. of 20˚CDB, and outdoor temp. of 7˚CDB, 6˚CWB.
*1 : Indicates the value in an anechoic chamber. During operation these values are somewhat higher due to ambient conditions.
*2 : The values are for one indoor unit operation.
*3 : If a cooling operation is conducted when the outdoor air temperature is –5˚C or lower, the outdoor unit should be installed at a place where it is not influenced by natural wind. If wind blows, the low pressure will drop and compressor frequency will increase, this will cause the capacity to drop and may cause the unit to break down.

※ Powerful-Hi can be selected. Sound level:140VNXPVD/140VSXPVD/140VNPVD/140VSPVD 42dB, 200VSPVD/250VSPVD 54dB
Air flow: 140VNXPVD/140VSXPVD/140VNPVD/140VSPVD 18dB, 200VSPVD/250VSPVD 29dB

Consideration on the Environment

All models employ R410A, with RoHS* directive

Several radical design changes and engineering developments have brought about a vast improvement in energy efficiency and environmental protection.

ENERGY LABEL "Class A"

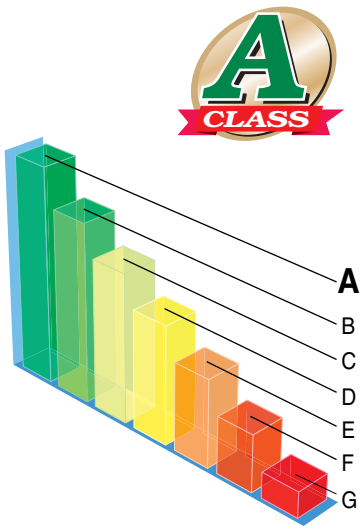

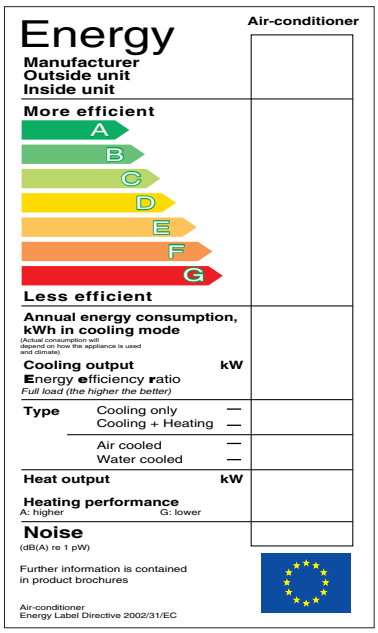

Employment of lead-free solder

Adapted to RoHS directive

RoHS:Restriciton of Hazardous substances

In order to avoid the release of hazardous substances into the environments, all models have utilized lead-free solder application. It has been considered to be difficult to use lead-free solder for practical applications because it requires higher solder temperatures at assembly, which can jeopardize reliability. However our PbF soldering method can produce a higher quality lead-free printed circuit board.

Employment of R410A

All models use refrigerant R410A characterized by the ozone depletion coefficient being 0.

Excellent Energy Saving

High performance and excellent energy savings are achieved at the same time by heat exchanger's increased capacity and employment of high efficiency DC motor.

Convenience

External switch connection CnT

All indoor units are equipped with an additional connection point-CnT-to connect indoor units to an external ON/OFF switch; e.g. time clock, fire alarm, etc.

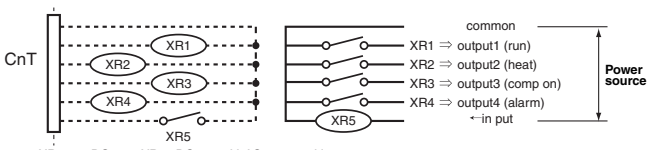



Remote surveillance system



Card key on-off

Remote control

Applying nonpolar 2-core in remote control line for all indoor units, it is very convenient for installation including renewal case.



Monitoring Function

MENTE PC can be used for the following inverter models with PCA006A075B Converter kit. Service task is made simple with this Converter kit.

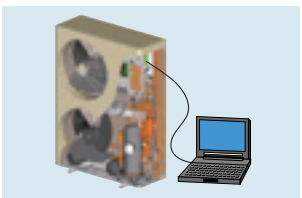

FDC71VNX
FDC100VNX/VSX
FDC125VNX/VSX
FDC140VNX/VSX

Control System SUPERLINK-II

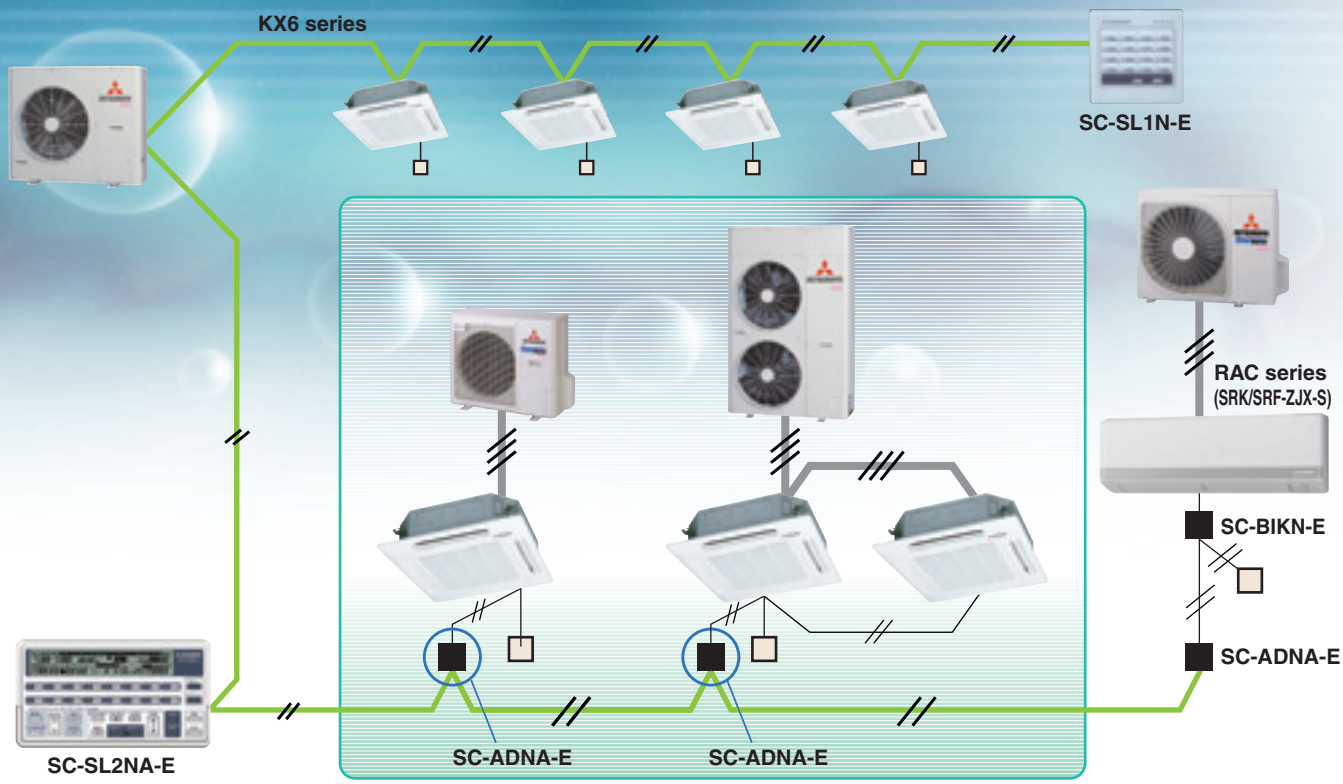

Central Control

SC-SL1N-E



Start/stop control of up to 16 indoor units is possible either individually or collectively. With simple operations, you can effect centralized control.

SC-SL2NA-E



Centralized control of up to 64 indoor units. It can allow connection with a weekly timer without using any interface.

SC-SL3NA-AE/BE



Easy operation realized with a large color LCD and touch panel. Up to 128 indoor units can be controlled, when three SUPERLINK-Ⅱ systems are connected.

PC windows central control

SC-WGWNA-A/B

(SC-WGWNA-B is with electric power calculation function)



Up to 96 cells (some cells can have two or more indoor units and total number of indoor units can be up to 128 units) are controlled from the Internet Explorer.

Additional engineering service cost etc. is required. Please consult your dealer when using this central control.

BMS interface unit

SC-BGWNA-A/B

(BACnet gateway)

(SC-WGWN-B is with electric power calculation function)



Up to 96 cells (some cells can have two or more indoor units and total number of indoor units can be up to 128 units) are controlled centrally from a BMS.

Additional engineering service cost etc. is required. In case of SC-BGWNA-B, communication test by qualified person regarding electric cost calculation function is required before commissioning. Please consult your dealer when using this gateway.

SC-LGWNA-A

(LonWorks gateway)



Up to 96 indoor units (48 indoor unit x 2) are linked as an open network! Centrally controlled through LonWorks!

Additional engineering service cost etc. is required. Please consult your dealer when using this gateway.

SUPERLINK E BOARD (SC-ADNA-E)

This board is used when conducting control of the single package (wired remote control unit) 1-type series using a network option (SC-SL1N-E, SC-SL2NA-E, etc).

(1) Functions

(a) Transmits the settings from the network option to the indoor units.
(b) Returns the priority indoor unit data in response to a data request from the network option.
(c) Inspects the error status of connected indoor units and transmits the inspection codes to the network option.
(d) A maximum of 16 units can be controlled (if in the same operation mode).

(2) Wiring connection diagram

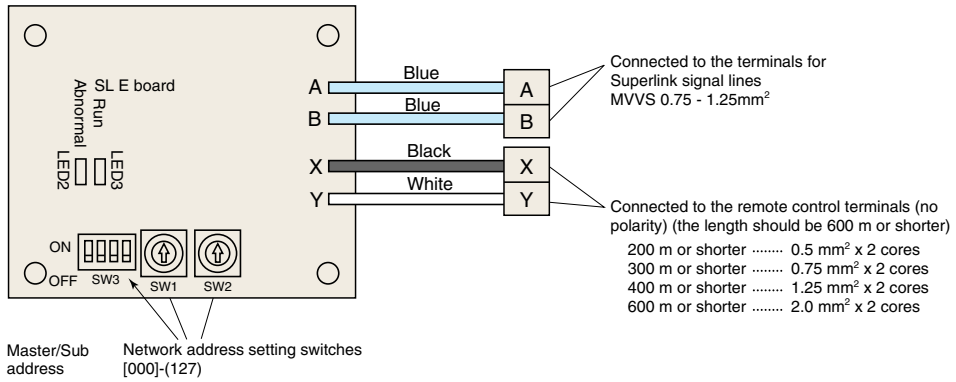

Basic Connections

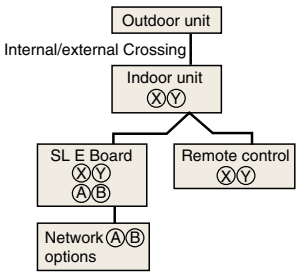

Plural Controls by Multiple Remote Controls. Mixture of Multiple Units

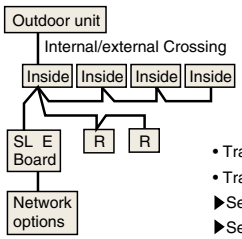

- Transmit the information of plural "Master" units to the network.
- Transmit the abnormalities of the "Slave" units to the network.

▶Setting the plural "Master/Slave" units with the dip SW of the printed circuit board.
▶Setting the "Master/Slave" remote controls with the dip SW of the remote control board.

Plural Controls by Multiple Remote Controls. Mixture of Multiple Units

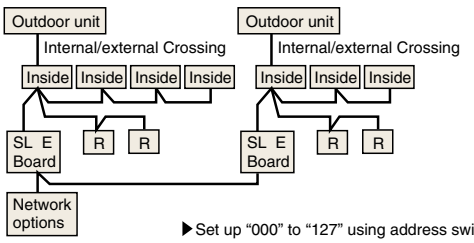

▶Set up "000" to "127" using address switch on the SL E board.

Without Remote Control

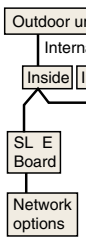

▶Set the SL E board dip SW to "Master" SW3-1 ON.
∗The network option SLA-1-E, SL1N-E is not allowed (This will disturb switching of the operation mode)

Wireless Kit

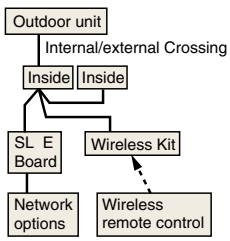

(3) Metal box dimension (unit:mm)

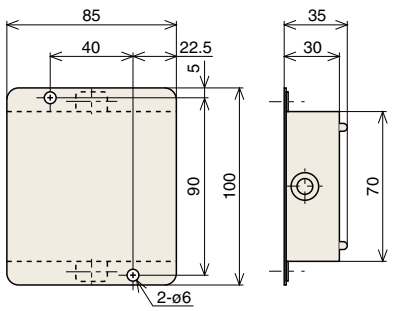

Control Systems [Individual control]

Remote Control line up

	indoor unit	remote control
wired	all models	RC-EX1A
		RC-E5
		RCH-E3

	indoor unit	remote control
wireless	FDT	RCN-T-36W-E
	FDTC	RCN-TC-24W-ER
	FDUM, FDU, FDF	RCN-KIT3-E
	FDEN	RCN-E1R

Wired remote control with weekly timer (option)

RC-E5



The RC-E5 control enables extensive access to service and maintenance technical data combined with easy to use functions and a clear LCD display.

Weekly timer function as standard

RC-E5 provides (as a standard feature) a weekly timer, which allows one-week operation schedules to be registered. A user can specify up to four times a day to start/stop the air conditioner. (Temperature setting is also possible with the timer).

Timer operation

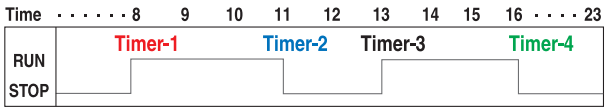

Run hour meters to facilitate maintenance checking

RC-E5 stores operation data when an anomaly occurs and indicates the error on the LCD. It also displays cumulative operation hours of the air conditioner and compressor since commissioning.

Room temperature controlled by the remote control sensor

The temperature sensor is housed in the top section of the remote control unit. This arrangement has improved the sensitivity of the remote control unit's sensor, which permits more finely controlled air conditioning.

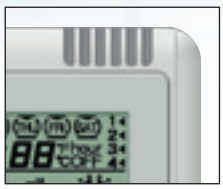

Changeable set temperature ranges

RC-E5 allows the upper and lower limits of a set temperature range to be specified separately.
By adjusting a set temperature range, you can ensure energy saving air conditioning by avoiding excessive cooling or heating.

	Changeable range
Upper limit	20~30°C(effective for heating operation)
Lower limit	18~26°C(effective for non-heating operation)

Simple remote control (option)

RCH-E3 (wired)



Considering specialized usage in hotel rooms, control buttons are limited only to minimum required functions such as ON/OFF, mode, temperature setting and fan speed. It is really simple and easy to use.

RCH-E3 is not applicable to the Individual flap control system and the Flap control system.
When RCH-E3 is used, the fan has 3 speed settings (Hi-Me-Lo) only.

Up to 16 units

It can control up to 16 units individually, with pressing the AIR CON No. button.

AUTO restart

This function allows starting the air conditioner automatically when power supply is restored after power failure or by turning on the power switch.

Wireless remote control (option)

For wireless control simply insert the infrared receiver kit on a corner of the panel.

RCN-T-36W-E,
RCN-TC-24W-ER

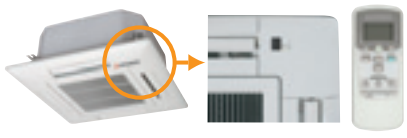

RCN-KIT3-E



RCN-E1R



Wireless remote control is not applicable to the Individual flap control system and the Flap control system.
When wireless remote control and RCH-E3 are used, the fan has 3 speed settings (Hi-Me-Lo) only.

Thermistor (option)

SC-THB-E3

In case sensor in the indoor units or the remote control sensor can not sense the room temperature correctly, or individual remote control in each room is not required but only censor is required (as when center control system is in place), install SC-THB-E3 at proper place in the rooms.



OUTDOOR UNIT DIMENSIONS (unit:mm)

FDC100VNX, 100VSX, 125VNX, 125VSX, 140VNX, 140VSX

Mark	Item	
A	Service valve connection of the attached connecting pipe(gas side)	ø15.88(5/8")(Flare)
B	Service valve connection(liquid side)	ø9.52(3/8")(Flare)
C	Pipe/cable draw-out hole	
D	Drain discharge hole	ø20x3places
E	Anchor bolt hole	M10x4places
F	Cable draw-out hole	ø30(front) ø45(side) ø50(back)

Notes:
(1) It must not be surrounded by walls on the four sides.
(2) The unit must be fixed with anchor bolts. An anchor bolt must not protrude more than 15mm.
(3) Where the unit is subject to strong winds, lay it in such a direction that the blower outlet faces perpendicularly to the dominant wind direction.
(4) Leave 1m or more space above the unit.
(5) A wall in front of the blower outlet must not exceed the units height.
(6) The model name label is attached on the lower right corner of the front panel.
(7) Connect the Service valve with local pipe by using the pipe of the attachment. (Gas side only)

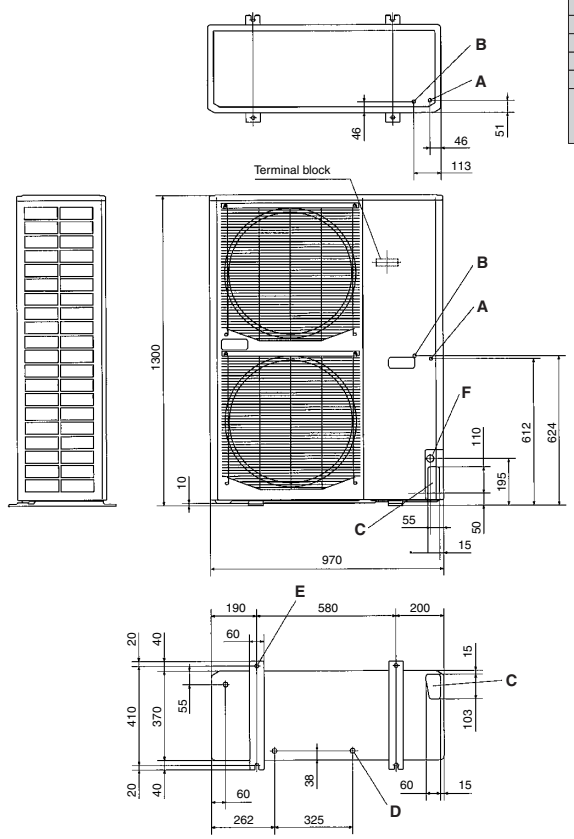

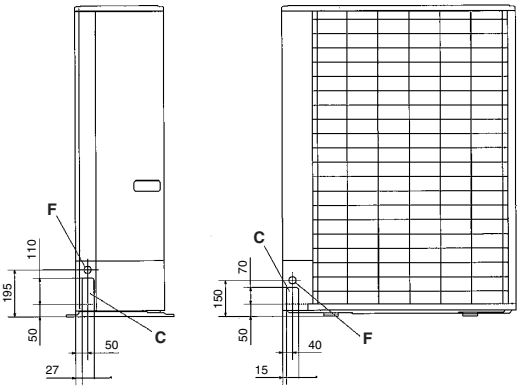

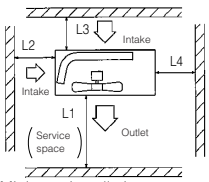

Minimum installation space

Examples of installation / Dimensions	1	2	3
L_1	Open	Open	500
L_2	300	5	Open
L_3	150	300	150
L_4	5	5	5

SRC40ZJX-S, 50ZJX-S, 60ZJX-S

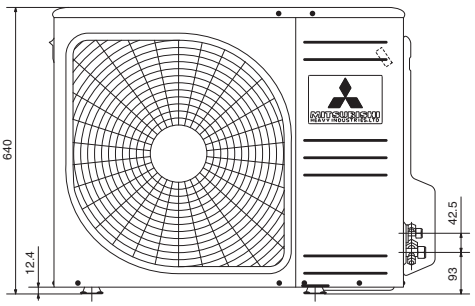

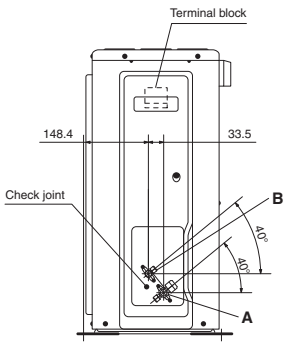

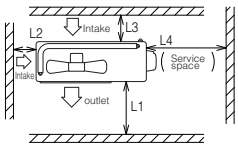

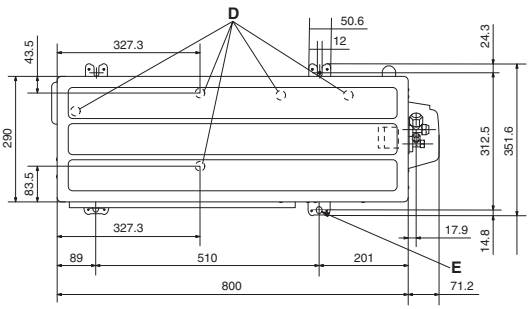

Examples of installation / Dimensions	1	2	3
L_1	Open	280	280
L_2	100	75	Open
L_3	100	80	80
L_4	250	Open	250

Mark	Item	
A	Refrigerant gas side pipe connection tap	ø12.7(flare)
B	Refrigerant liquid side pipe connection tap	ø6.35(flare)
D	Drain discharge port	ø20.5x5places
E	Anchor bolt hole	M10x4places

Notes:
(1) It must not be surrounded by walls on the four sides.
(2) The unit must be fixed with anchor bolts.An anchor bolt must not protrude more than 15mm.
(3) Where the unit is subject to strong winds, lay it in such a direction that the blower outlet faces perpendicularly to the dominant wind direction.
(4) Leave a 1m or larger space above the unit.
(5) A wall in front of the blower outlet must not exceed the units height.
(6) The unit name plate is attached on the lower right corner of the front panel.

OUTDOOR UNIT DIMENSIONS (unit:mm)

FDC71VNX

Mark	Item	
A	Service valve connection (gas side)	ø15.88(5/8") (Flare)
B	Service valve connection (liquid side)	ø9.52(3/8") (Flare)
C	Pipe/cable draw-out hole	
D	Drain discharge hole	ø20x3places
E	Anchor bolt hole	M10x4places

Notes:
(1) It must not be surrounded by walls on the four sides.
(2) The unit must be fixed with anchor bolts. An anchor bolt must not protrude more the 15mm.
(3) Where the unit is subject to strong winds, lay it in such a direction that the blower outlet faces perpendicularly to the dominant wind direction.
(4) Leave 1m or more space above the unit.
(5) A wall in front of the blower outlet must not exceed the units height.
(6) The model name label is attached on the lower right corner of the front.

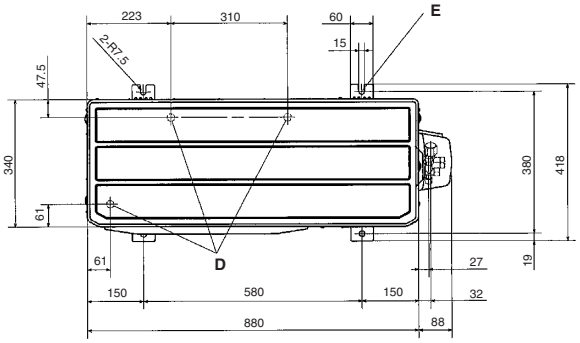

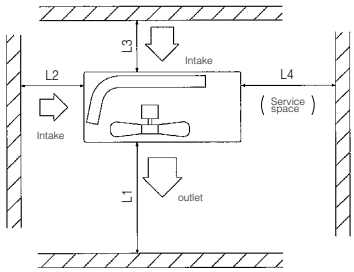

Minimum installation space

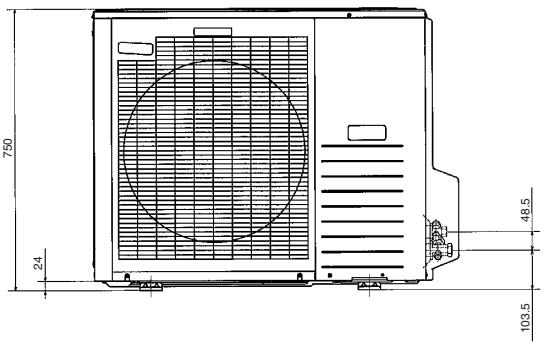

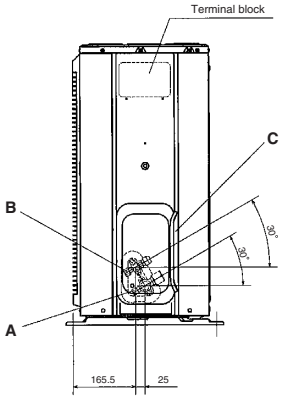

Examples of installation / Dimensions	1	2	3
L1	Open	Open	500
L2	300	250	Open
L3	100	150	100
L4	250	250	250

FDC100VN, 125VN, 140VN
100VS, 125VS, 140VS

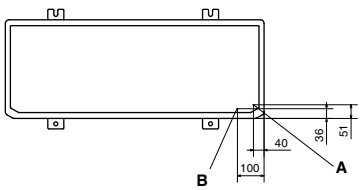

Mark	Item	
A	Refrigerant gas side pipe connection tap	ø15.88(flare)
B	Refrigerant liquid side pipe connection tap	ø9.52(flare)
C	Pipe/cable draw-out port	
D	Drain discharge port	ø20.3x3places
E	Anchor bolt hole	M10x4places
F	Cable draw-out port	ø30.3x3places

Notes:
(1) It must not be surrounded by walls on the four sides.
(2) The unit must be fixed with anchor bolts.An anchor bolt must not protrude more than 15mm.
(3) Where the unit is subject to strong winds, lay it in such a direction that the blower outlet faces perpendicularly to the dominant wind direction.
(4) Leave a 1m or larger space above the unit.
(5) A wall in front of the blower outlet must not exceed the units height.
(6) The unit name plate is attached on the lower right corner of the front panel.

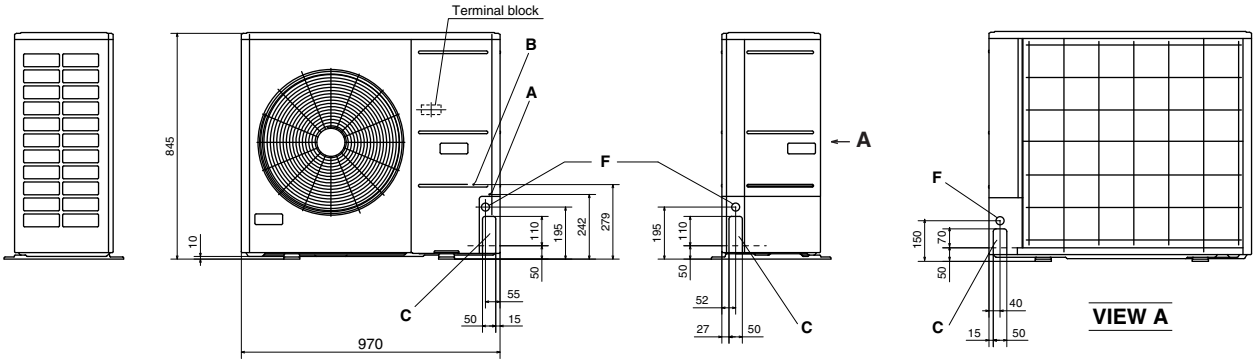

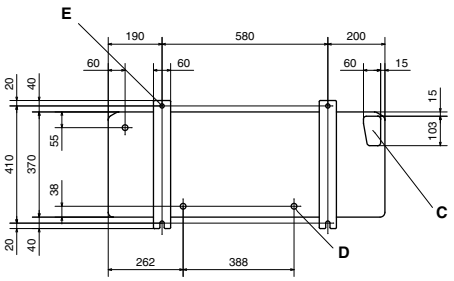

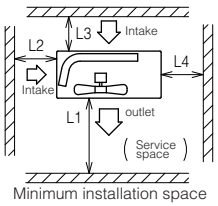

Minimum installation space

Examples of installation / Dimensions	1	2	3
L1	Open	Open	500
L2	300	5	Open
L3	150	300	150
L4	5	5	5

FDC200VS

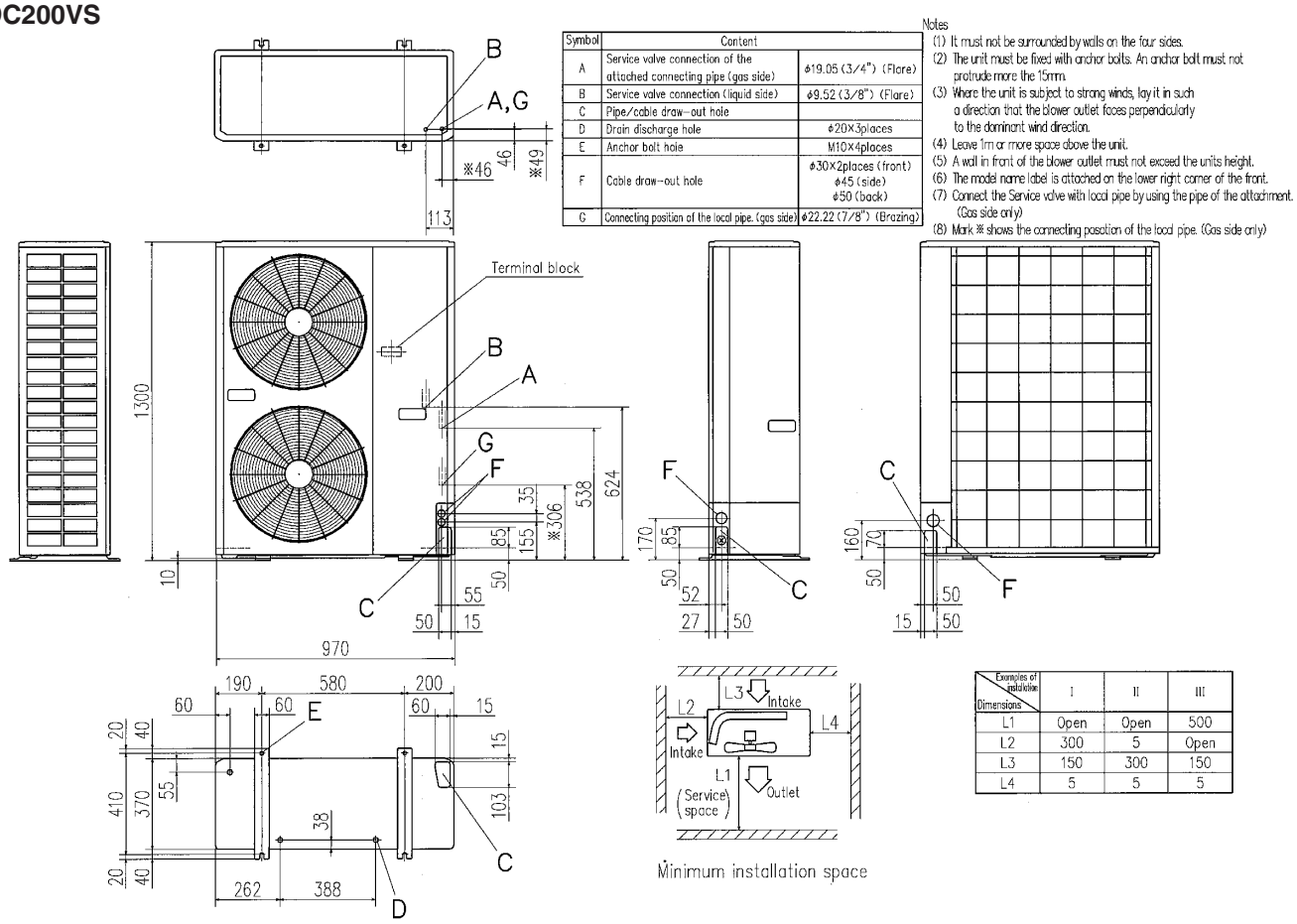

Symbol	Content	
A	Service valve connection of the attached connecting pipe (gas side)	φ19.05 (3/4") (Flare)
B	Service valve connection (liquid side)	φ9.52 (3/8") (Flare)
C	Pipe/cable draw-out hole	
D	Drain discharge hole	φ20×3places
E	Anchor bolt hole	M10×4places
F	Cable draw-out hole	φ30×2places (front) φ45 (side) φ50 (back)
G	Connecting position of the local pipe. (gas side)	φ22.22 (7/8") (Brazing)

Notes
(1) It must not be surrounded by walls on the four sides.
(2) The unit must be fixed with anchor bolts. An anchor bolt must not protrude more the 15mm.
(3) Where the unit is subject to strong winds, lay it in such a direction that the blower outlet faces perpendicularly to the dominant wind direction.
(4) Leave 1m or more space above the unit.
(5) A wall in front of the blower outlet must not exceed the units height.
(6) The model name label is attached on the lower right corner of the front.
(7) Connect the Service valve with local pipe by using the pipe of the attachment. (Gas side only)
(8) Mark ※ shows the connecting position of the local pipe. (Gas side only)

Minimum installation space

Examples of installation / Dimensions	I	II	III
L1	Open	Open	500
L2	300	5	Open
L3	150	300	150
L4	5	5	5

FDC250VS

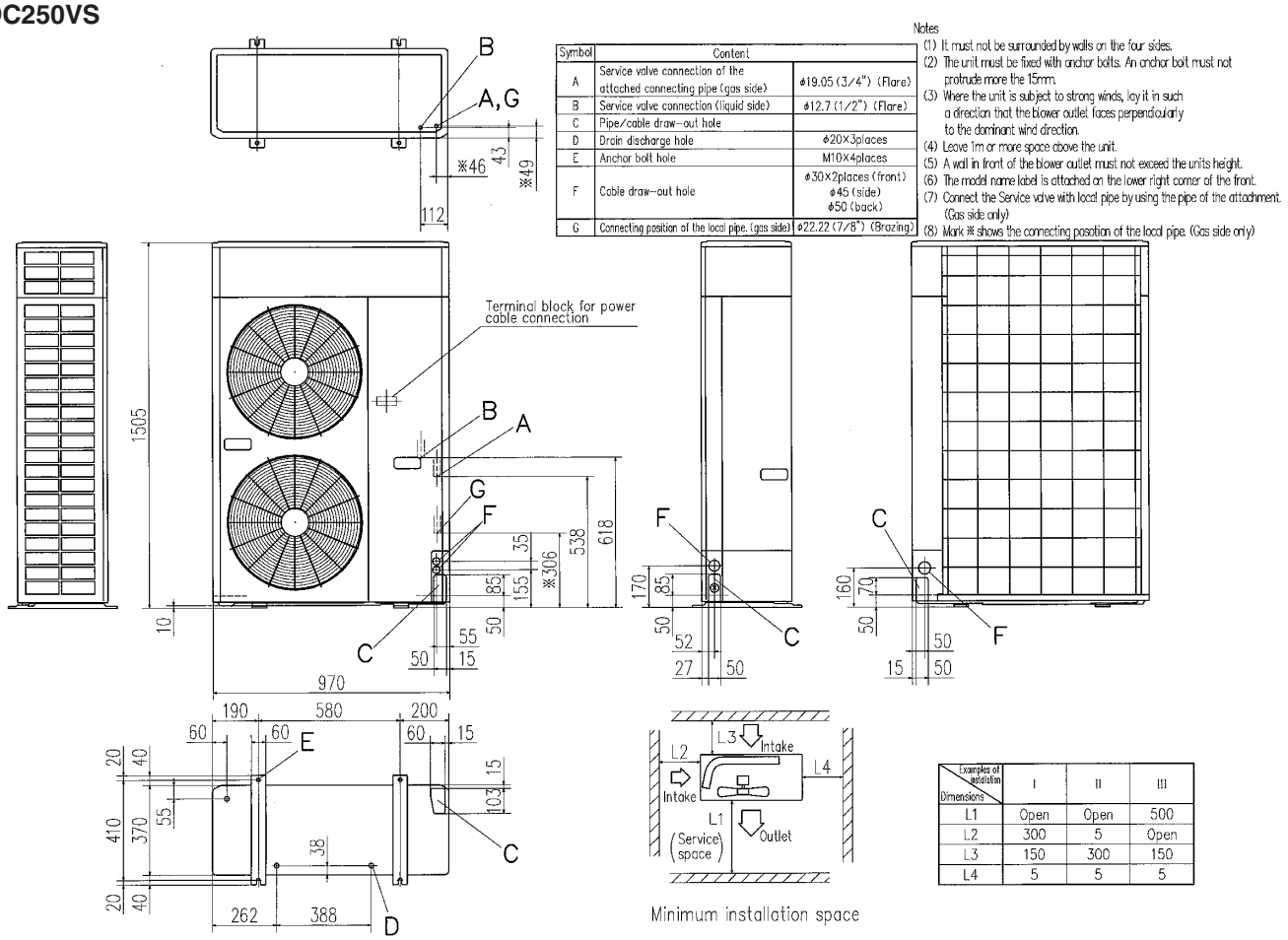

Symbol	Content	
A	Service valve connection of the attached connecting pipe (gas side)	φ19.05 (3/4") (Flare)
B	Service valve connection (liquid side)	φ12.7 (1/2") (Flare)
C	Pipe/cable draw-out hole	
D	Drain discharge hole	φ20×3places
E	Anchor bolt hole	M10×4places
F	Cable draw-out hole	φ30×2places (front) φ45 (side) φ50 (back)
G	Connecting position of the local pipe. (gas side)	φ22.22 (7/8") (Brazing)

Notes
(1) It must not be surrounded by walls on the four sides.
(2) The unit must be fixed with anchor bolts. An anchor bolt must not protrude more the 15mm.
(3) Where the unit is subject to strong winds, lay it in such a direction that the blower outlet faces perpendicularly to the dominant wind direction.
(4) Leave 1m or more space above the unit.
(5) A wall in front of the blower outlet must not exceed the units height.
(6) The model name label is attached on the lower right corner of the front.
(7) Connect the Service valve with local pipe by using the pipe of the attachment. (Gas side only)
(8) Mark ※ shows the connecting position of the local pipe. (Gas side only)

Minimum installation space

Examples of installation / Dimensions	I	II	III
L1	Open	Open	500
L2	300	5	Open
L3	150	300	150
L4	5	5	5

Before starting use

Heating performance
The heating performance values (kW) described in catalog are the values obtained by operating at an outdoor temperature of 7℃ and indoor temperature of 20℃ as set forth in the ISO Standards. As the heating performance decreases as the outdoor temperature drops, if the outdoor temperature is too low and the heating performance is insufficient, use other heating appliances as well.

Indication of sound values
The sound values are the values (A scale) measured in a chamber such as an anechoic chamber following the ISO Standards. In the actual installation state, the value is normally larger than the values given in the catalog due to the effect of surrounding noise and echo. Take this into consideration when installing.

Use in oil atmosphere
Avoid installing this unit in as atmosphere where oil scatters or builds up, such as in a kitchen or machine factory.
If the oil adheres to the heat exchanger, the heat exchanging performance will drop, mist may be generated, and the synthetic resin parts may deform and break.

Use in acidic or alkaline atmosphere
If this unit is used in acidic atmosphere such as hot spring areas having high level of sulfuric gases or in alkaline atmosphere including ammonia or calcium chloride, places where the exhaust of the heat exchanger is sucked in, or at coastal areas where the unit is subject to salt breezes, the outer plate or heat exchanger, etc., will corrode. Please ask a dealer or specialist when you use an air conditioner in places differing from a general atmosphere.

Use in places with high ceilings
If the ceiling is high, install a circulator to improve the heat and air flow distribution when heating.

Refrigerant leakage
The refrigerant (R410A) used for Air conditioner is non-toxic and inflammable in its original state.
However, in consideration of a state where the refrigerant leaks into the room, measures against refrigerant leaks must be taken in small rooms where the tolerable level could be exceeded. Take measures by installing ventilation devices, etc.

Use in snowy areas
Take the following measures when installing the outdoor unit in snowy areas.

·Snow prevention
Install a snow-prevention hood so that the snow does not obstruct the air intake port or enter and freeze in the outdoor unit.

·Snow piling
In areas with heavy snow fall, the piled snow could block the air intake port. In this case, a frame that is 50cm or higher than the estimated snow fall must be installed underneath the outdoor unit.

Automatic defrosting device
If the temperature is low, and the humidity is high, frost will stick to the heat exchanger of the outdoor unit. If use is continued, the heating performance will drop.
The "Automatic defrosting device" will function to remove this frost.
After heating for approx, three to ten minutes, it will stop, and the frost will be removed. After defrosting, hot air will be blown again.

Servicing the air-conditioner
After the air-conditioner is used for several seasons, dirt will build up in the air-conditioner causing the performance to drop. In addition to regular servicing, we recommend the maintenance contract (charged for) by a specialist.

⚠ Safety Precautions

Air-conditioner usage target
The air-conditioner described in this catalog is a dedicated cooling/heating device for human use.
Do not use it for special applications such as the storage of foodstuffs, animals or plants, precision devices or valuable art, etc.
This could cause the quality of the items to drop, etc.
Do not use this for cooling vehicles or ships. Water leakage or current leaks could occur.

Before use
Always read the "User's Manual" thoroughly before starting use.

Installation
Always commission the installation to a dealer or specialist. Improper installation will lead to water leakage, electric shocks and fires.
Make sure that the outdoor unit is stable in installation. Fix the unit to stable base.

Usage place
Do not install in places where combustible gas could leak or where there are sparks.
Installation in a place where combustible gas could be generated, flow or accumulate, or places containing carbon fibers could lead to fires.

MITSUBISHI HEAVY INDUSTRIES, LTD.

Mitsubishi Heavy Industries, Ltd.
Air-Conditioning & Refrigeration Systems
16-5, Konan 2-chome, Minato-ku, Tokyo, 108-8215 Japan
http://www.mhi.co.jp

Our factories are ISO9001 and ISO14001 certified.

Certified ISO 9001

BIWAJIMA PLANT
Mitsubishi Heavy Industries, Ltd.
Air-conditioning & Refrigeration Systems Headquarters
Certificate number : JQA-0709

MITSUBISHI HEAVY INDUSTRIES-MAHAJAK AIR CONDITIONERS CO., LTD.
Certificate Number : 04100 1998 0813

Mitsubishi Heavy Industries-Haier (Quingdao) Air-conditioners Co.,Ltd.
Certificate Number : 5170-1996-AQ-RCG-RvA

Certified ISO 14001

BIWAJIMA PLANT
Mitsubishi Heavy Industries, Ltd.
Air-conditioning & Refrigeration Systems Headquarters
Certificate number : JQA-EM0256

MITSUBISHI HEAVY INDUSTRIES-MAHAJAK AIR CONDITIONERS CO.,LTD.
Certificate Number : 04104 1998 0813 E5

Mitsubishi Heavy Industries-Haier (Quingdao) Air-conditioners Co.,Ltd.
Certificate number : 01-1998-083

HB91-12P01E-A-2 February 2012(3B)R

Because of our policy of continuous improvement, we reserve right to make changes in all specifications without notice.
Printed in Japan