Engineered for flexibility and performance.™



PFS.C-B

Refrigerant: R134a
PFS.C-B 100~490tons

Single Screw Water Cooled Chiller

Power supply:380V/400V/415V/3P/50Hz



ISO9001 2008
ISO14001 2004
OHSAS18001 1999

CNAB002—Q
CNAB002—E

产品安全认证

AHRI CERTIFIED
Water-Cooled Chillers
AHRI Standard 550/590

McQuay®
Air Conditioning

Content List

1 Water Cooled PFS.C–B General introduction ... 1

2 Chiller Features ... 2

2.1 Environmental R134a refrigerant ... 2
2.2 High efficiency , More energy-saving ... 2
2.3 Long lifetime by accepting "lead-lag" function ... 3
2.4 low noise level and vibration ... 4
2.5 Low maintenance charge and convenient serviceability ... 5
2.6 More reliable ... 5

3 Control Features ... 6

3.1 Control display, alarm and protection function ... 6
3.2 Main control function(option) ... 7

4 PFS.C–B Technical Data ... 8

5 Chiller Dimension ... 10

6 6.Accessory ... 12

6.1 Standard accessories (furnished on basic unit) ... 12
6.2 Optional accessories (On request) ... 12

7 Installation Notes ... 13

7.1 Handling ... 13
7.2 Location ... 13
7.3 Chiller mounting points ... 13
7.4 Field wiring ... 15
7.5 Relief valve ... 16
7.6 Start-up ... 16
7.7 Warranty ... 16
7.8 Application enviroment ... 16

8 Product Specifications ... 17

Part 1 General ... 17
Part 2 Products ... 18
Part 3 Execution ... 18

9 Typical Project ... 20



1. Water Cooled PFS.C-B General introduction



- Since 1970s, with the most ecological design, McQuay single screw serials product has been approved as most efficient and reliable product in the world. It's unmatched advantage at various applications attracted millions of customers globally.

- McQuay single screw serials product PFS.C-B serials use R134a as Cooling refrigerant, which has approved as environmental friendly and most popular "Green" refrigerant in the world.

- Since 1990s, with most innovative design, excellent site performance and proved reliability, McQuay single screw serials product PFS.C-B has been certified as top energy saving product in many countries.

- Typical application
  - Cooling system (standard)
  - Heat recovery system
  - Ice storage

  For other system applictions,please consult factory for details.

Nomenclature

P F S X X X · X X X XX-X

- Water cooled flooded screw chiller
- Nominal cooling capacity code: 110,120,135,...
- Compressor quantity: 1, 2
- C-R134a
- Power supply code: F-380V/50Hz, G-400V/50Hz,K--415V/50Hz
- Type code:ST-standard,ME-medium efficiency
- Generation code: A, B, C

2. Chiller Features

2.1 Environmental R134a refrigerant

- More environmental: not contain chlorine and zero ODP（Ozone Depletion potential）



- Less consumption comparing with R123 refrigerant
- No phase out time according to Montreal Protocol

2.2 High efficiency , More energy-saving

- Casted steeled 6 teeth main screw coats with aluminum film and 11 teeth star rotor in “silver shield” composite material (imported from Netherlands). Mesh of metal main screw and non-metaled stars result in zero gap and low leakage. High efficiency can be produced in this way.



- PFS.CFST-B /PFS.CFME-B COP/IPLV overview

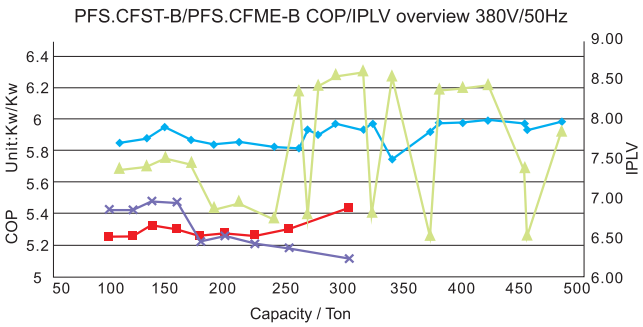

Above curves base on techinical data of page 8~11 under AHRI standard.

- Infinite capacity control to coutrol precisely evaporator leaving water temperature.

  PFS.C-B equips with advanced throttling device: liquid sensor and electronic expansion valve (EXV) control. Unload/load can be automatically operated by control system, plus with excellent part load performance (IPLV/ NPLV) refer to parameter sheet in page thus making chiller always running in energy -saving condition.

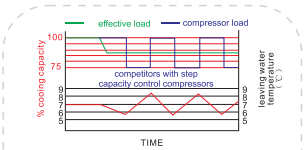

Flucuation of leaving water temp result in more electricity consumption and cannot control temp precisely

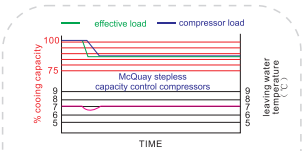

Steady & precise leaving water temp control, chiller always run in energy saving condition

- The majority of comfort cooling systems operate at 60% or less of building design load for most of the year. For that reason, PFS.C-B chiller was designed to obtain excellent part load performance. This is achieved by a combination of individual component features that include compressor design, operating control, and more heat transfer surface available when only one compressor running
- Single compressor lowest load can reach 25%

2.3 Long lifetime by accepting “lead-lag” function

- McQuay multi-compressors water cooled screw chiller accept “lead-lag” Function.

“lead-lag” principle is build-in clock will calculate individual compressor’s operation time .Based on the timer statistic data, controller can automatically select startup compressor which runs less time and stop compressor which runs longer time when just one compressor performance is needed for dual compressor systems.

For most air conditioning systems, chiller 97% operation time runs under part load, dual compressor water cooled chiller just need one compressor running at 60% part load condition.
By adopting “lead-lag,” lifetime of each compressor can be extended and result in an extended chiller lifetime.

- McQuay compressor designs with one single screw and twin rotors (stars). Screw motor’s two axial terminals forced by equally contrary suction pressure which result in offset axial force, symmetrical layout of two starts make forces to screw motor simultaneously and thus offset radial force. Axial and radial contrarily force eliminates to zero and remove abrasion of screw motor. In this way, the balanced force technology make screw motor life exceed 100,000 working hours and greatly extent compressor lifetime.

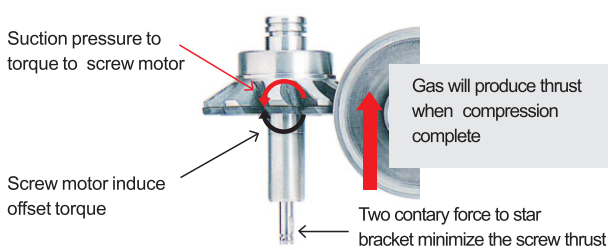

2. Chiller Features

2.4 low noise level and vibration

- Rotary compression circulation, no extra vibration result from reciprocating motion.
- The McQuay compressor design with a single screw and twin rotors allows a constant gas flow. Screw and rotor teeth ratio is 6:11, one circle of rotate screw will induce 12 times discharge. This design can disperse and minimize discharge pulse, while make discharge more balance and steady. In this way, it avoids stridulation result from unsteady flow of discharge in the channel and eliminates gas pulsations.

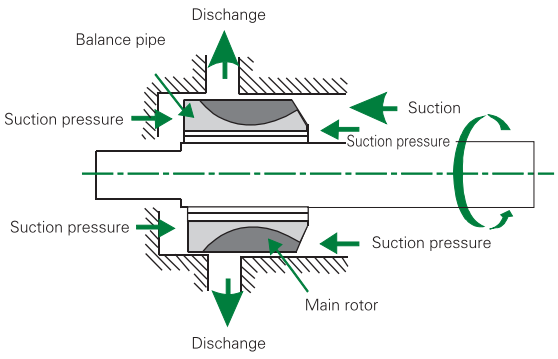

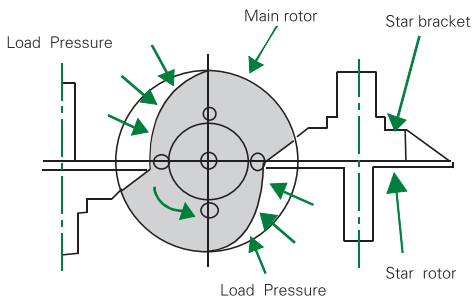

- There's a discharge vent on the upper & lower side, it makes discharge chambers act as sound attenuators. Two different low frequency noises form two sine waves , one sine wave's peak always meet another's trough, it will offset the low frequent noise.

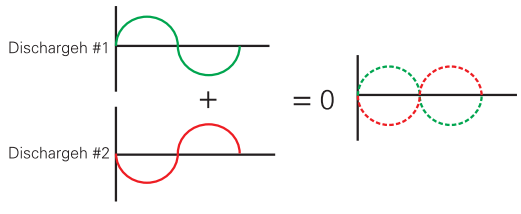

- Much lower vibration data than AHRI requirement and spring isolator as optional accessary to help you minimize vibration to hold a coin.



2.5 Low maintenance charge and convenient serviceability

- Mcquay PFS.C-B screw chiller adopts semi-hermetic compressor, which allows visual inspection of main screw and gate rotors. You can easily replace new stars bearings or star material if star is broken by accident.



2.6 More reliable

- Every PSF.C-B screw chiller will be strictly tested in McQuay Wuhan factory to ensure a trouble-free start-up. Factory test bench is AHRI certified to guarantee the performance and reliability in conform to AHRI requirement before chiller ex-factory.



- From 2005 year , McQuay China already have sold thousands of screw chiller to Australia,Asia and Latin America , covering projects of national lab center, hospital, hotel , airport, subway, chemical factory, ect. Widely usage of screw chillers have proven a reliable quality and a remarkable success in market.



3. Control Features

McQuay PFS.C-B utilizes colorful touch screen with humanity design to convenient operation and maintenance. English/Chinese version can be switched easily. Operators can view all running status & parameters, change setting points and clear alarms, as well as download data logging to PC.

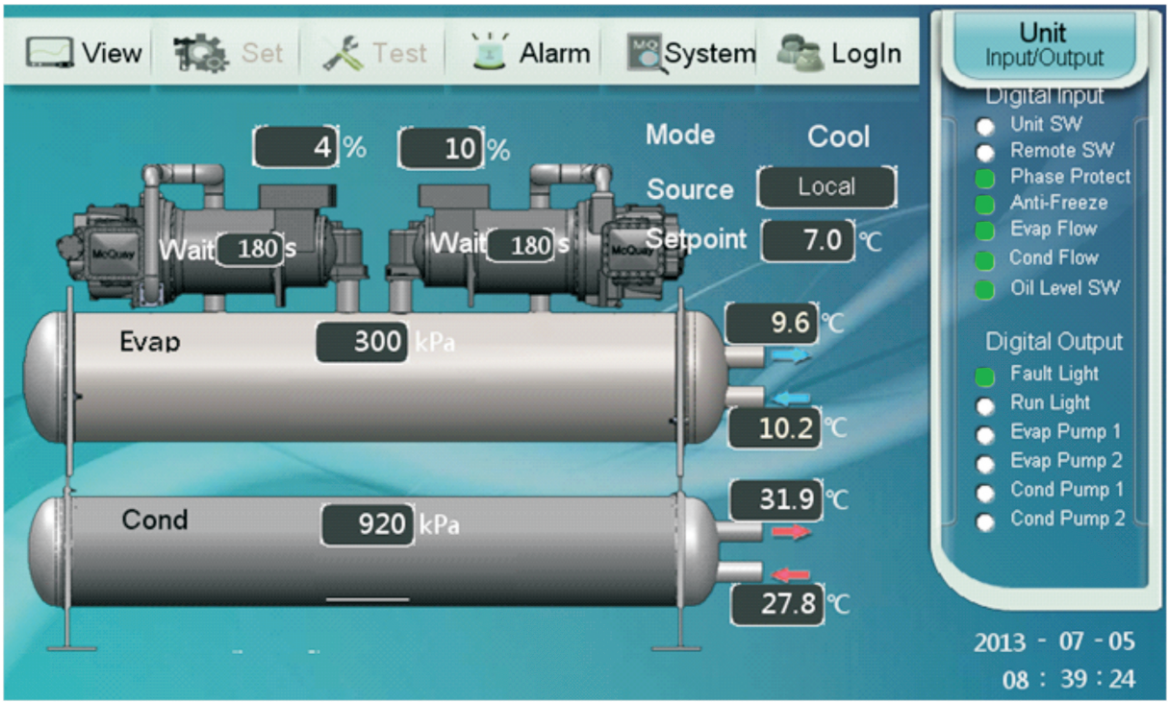

Following indicator lights and switches are equipped on interface control panel:

- Emergency stop switch
- Unit/compressor switch(compressor switch only on PFS.2C-B)
- Power/running/alarm indicator lights
- Compressor running lights

3.1 Control display, alarm and protection function:

3.1.1Display:

- Leaving chilled water setting temp;
- Entering/leaving chilled/condensing water temp;
- Compressor suction/discharge pressure;
- Compressor total operating time and load %
- Alarm information
- Compressor discharge temperature/superheat
- Compressor oil supply pressure
- Chiller's condensing /evaporating temperature;

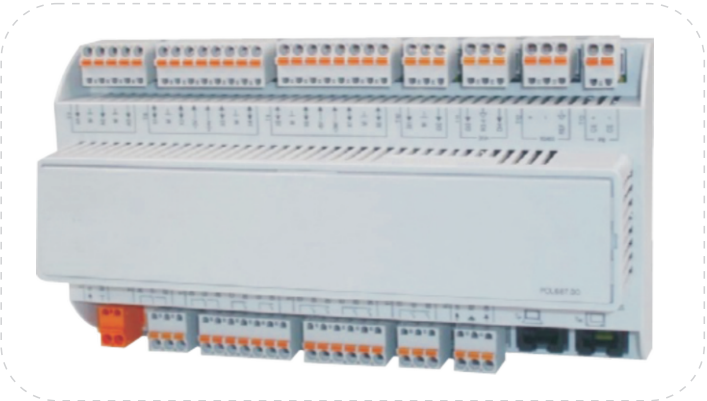

3.1.2Alarm protection function:

- Refrigerant high/low pressure protection;
- Phase monitor: phase unbalance/failure/fault ;
- Chilled water freezing protection
- Motor overheat protection;
- Compressor abnormal frequently start protection;
- Oil level, oil different pressure protection;
- Low/high voltage protection;

3. Control Features

3.2 Main control function(option)

RS485 port can be connected to the computer and download control programs to update control system.

Water cool chilling unit-control system

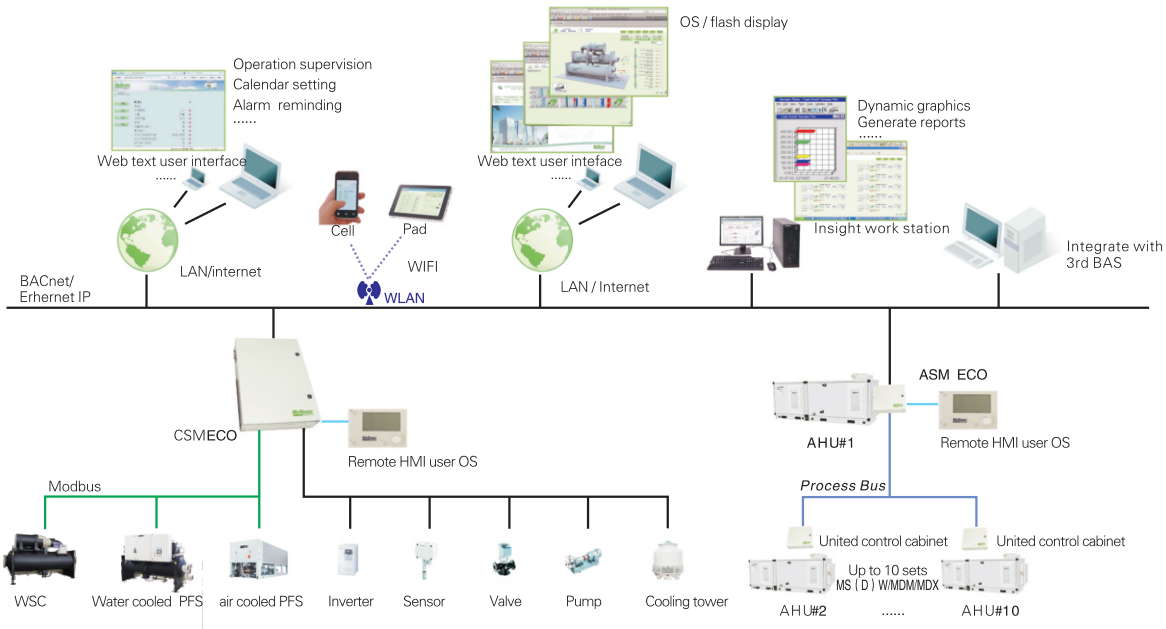

PFS control system function as below:

- RS485 building communication to communicate directly with 3rd part control system via public protocol.It then can realize quickly and precisely data transfer;
- Pre-calibration and pre-alarm protection to avoid sudden shut off result from sharply unload/load;
- Built-in Time Clock, 7 working days automatically startup /stop setting. It can then achieve annual non-human -operation function;
- Touch screen display chiller operation data and alarm information, easy operation and maintenance;
- Control output time signal of Wye-delta conversion which will result in a more stable startup without extra electric maintenance.
- Condensing/chilled water pump automatically ON/ OFF: water pump will be pre-starup before chiller startup and stop after chiller shutoff ;
- Cooling tower fan automatically ON/ OFF：Controller analyzes chiller's operation load % and ELWT, select ON/ OFF logic ,send ON/OFF signal, to make system always runs in energy-saving condition.
- Two chiller auto master-slave control: one shield cable between two chillers' controller. Two chillers will automatically ON/OFF according to different loadings when LAN is formed. Chillers can always run in the most comfortable condition.
- Multi-compressor lead-lag balance control: before chiller startup, control will analyze each compressor's total working hours, automatically select startup compressor which runs less working hours and stop compressor which runs longer working hours. In this way, every compressor's working hours can be balanced.
- Stabilized PID (Proportional - Integral -Derivative) regulation by microprocessor via analyzing the signal sensed by the evaporator leaving water sensor with an accuracy of ± 0.1°C.
- Remote on/off
- 4~20mA demand limit
- Chilled water temperature reset

4. PFS.C-B Technical Data

PFS.CFST-B technical data

Model			PFS110.1	PFS135.1	PFS150.1	PFS170.1	PFS190.1	PFS215.1	PFS245.1
Cooling capacity		kW	374.0	453.4	509.7	586.7	654.7	729.1	835.0
Power input		kW	64.0	77.2	85.7	99.9	112.1	124.5	143.6
COP		100%	5.85	5.88	5.95	5.87	5.84	5.85	5.82
		75%	7.04	7.06	7.16	7.09	6.68	6.70	6.71
		50%	7.82	7.85	7.98	7.91	7.39	7.54	7.17
		25%	7.01	7.04	7.19	7.14	5.64	5.71	5.41
IPLV			7.37	7.40	7.52	7.45	6.87	6.95	6.75
Evap.flow rate		l/s	16.1	19.5	21.9	25.3	28.2	31.4	36.0
Evap. pressure drop		kPa	20.0	27.9	20.3	22.8	22.3	21.8	25.5
Cond. flow rate		l/s	20.1	24.4	27.4	31.6	35.2	39.2	44.9
Cond. pressure drop		kPa	30.2	24.4	25.0	32.0	27.6	28.1	30.7
Compressor	Type		Semi-hermetic Single Screw Compressor						
	Quantity		1	1	1	1	1	1	1
Starter type			Y-Δ						
Capacity control		%	25% ~ 100% stepless regulation						
Condenser	Type		Shell-And-Tube						
	Quantity		1	1	1	1	1	1	1
Evaporator	Type		Shell-And-Tube Flooded						
	Quantity		1	1	1	1	1	1	1
Refrigerant	Type		R134a						
	Charge	kg	215	215	215	215	315	315	315
Oil	Brand		McQuay oil E						
	Charge	L	74	74	74	74	85	85	85
Temp. Control			Evaporator Leaving water tempratrure PID						
Evap. Water Pipe		mm	ϕ168	ϕ168	ϕ168	ϕ168	ϕ219	ϕ219	ϕ219
Cond. Water Pipe		mm	ϕ168	ϕ168	ϕ168	ϕ168	ϕ219	ϕ219	ϕ219
Thermal insulation material			Polyurethane insulation						
Chiller weight		kg	3298	3347	3484	3522	5030	5078	5117
Operation weight		kg	3552	3617	3772	3818	5453	5501	5556
Rated load amps		A	109.8	129.9	143.5	166.6	186.8	211.6	242.7
Compressor Inrush		A	329.7	329.7	329.7	329.7	545.9	637.8	637.8
Max Inrush amps		A	329.7	329.7	329.7	329.7	545.9	637.8	637.8
Dimension L×W×H		mm	3340×1836×2050				3462×1914×2275		

Note:

1、Above chiller cooling capacity is based on condition: Evap: LWT 44°F, flow rate 0.043 l/(s・kW), fouling factor 0.0001(h・Ft²・°F/Btu).
Cond: EWT 85°F, flow rate 0.054 l/(s・kW), fouling factor 0.00025(h・Ft²・°F/Btu).
Capacity control range relate with specified job condition.

2、Within the scope of AHRI certification program, ratings are certified in accordance with AHRI 550/590. All other ratings are in accordance with AHRI 550/590. Corresponding AHRI certified selection program.

3、Standard: Power supply 380V/50Hz, Wye-Delta starter, 2 pass GB (Chinese national standard) code Evaporator and condenser Victaulic groove right side connection.

4、IPLV/NPLV=0.01*A+0.42*B+0.45*C+0.12*D (A: COP@100% load; B: COP@75% load;C: COP@50% load; D: COP@25% load ;)

5、Min Shipment size =(L+13+400)*(W+13+300)*(H+13+140) include packing wood skid for container shipment, this size is for transportation and plant room access.

6、Consult factory for 3 pass, ASME code vessel , Solid state starter.

7、Voltage tolerance: ±10%, for other Volt ratings please refer to corresponding AHRI certified selection program.

8、Chiller size hereunder may be changed if it equips with solid state starter, 3 pass Evaporator or Condenser, flange ,water pipe left connection(in front of control panel), or suction line shut off valve. Please consult factory to get the exact size.

9、Model# in the table above omit CFST-B.

* Single compressor chiller capacity use the compressor capacity control (25%~100% stepless control).
Please refer to latest software selection for actual chiller capacity control.

4. PFS.C-B Technical Data

PFS.CFST-B technical data

Model			PFS270.1	PFS330.1	PFS380.1	PFS460.1	PFS265.2	PFS280.2	PFS300.2
Cooling capacity		kW	935.1	1126.5	1298.1	1587.7	906.7	963.4	1019.5
Power input		kW	157.7	188.6	219.1	268.0	156.0	163.3	170.8
COP		100%	5.93	5.97	5.92	5.93	5.81	5.90	5.97
		75%	6.63	6.67	6.81	6.81	6.93	6.99	7.12
		50%	7.17	7.21	6.92	6.92	9.72	9.81	9.98
		25%	5.98	5.97	4.10	4.11	8.36	8.53	8.58
IPLV			6.79	6.82	6.53	6.53	8.35	8.43	8.57
Evap.flow rate		l/s	40.3	48.5	55.9	68.4	39.0	41.5	43.9
Evap. pressure drop		kPa	36.8	44.3	57.1	57.7	30.2	38.9	39.8
Cond. flow rate		l/s	50.3	60.6	69.9	85.4	48.8	51.9	54.9
Cond. pressure drop		kPa	50.1	57.3	68.7	70.1	36.6	42.5	48.1
Compressor	Type		Semi–hermetic Single Screw Compressor						
	Quantity		1	1	1	1	2	2	2
Starter type			Y–Δ						
Capacity control		%	25% ~ 100% stepless regulation				12.5% ~ 100% stepless regulation		
Condenser	Type		Shell–And–Tube				Shell–And–Tube Flooded		
	Quantity		1	1	1	1	1	1	1
Evaporator	Type		Shell–And–Tube Flooded						
	Quantity		1	1	1	1	1	1	1
Refrigerant	Type		R134a						
	Charge	kg	315	350	495	565	315	350	350
Oil	Brand		McQuay oil E						
	Charge	L	85	85	145	174	85	85	85
Temp. Control			Evaporator Leaving water tempratrure PID						
Evap. Water Pipe		mm	ϕ219	ϕ219	ϕ219	ϕ219	ϕ219	ϕ219	ϕ219
Cond. Water Pipe		mm	ϕ219	ϕ219	ϕ219	ϕ219	ϕ219	ϕ219	ϕ219
Thermal insulation material			Polyurethane insulation						
Chiller weight		kg	5721	5843	8301	8741	5462	5732	5769
Operation weight		kg	6251	6393	8965	9405	5914	6209	6260
Rated load amps		A	281.3	331.2	381.3	471.7	262.4	273.9	286.0
Compressor Inrush		A	731.5	882.3	1107.9	1242.7	329.7	329.7	329.7
Max Inrush amps		A	731.5	882.3	1107.9	1242.7	460.9	472.6	472.7
Dimension L×W×H		mm	3764×2010×2345		4308×2167×2585		3462×1870×2180	3764×1900×2297	

Note:

1、Above chiller cooling capacity is based on condition: Evap: LWT 44°F, flow rate 0.043 l/(s・kW), fouling factor 0.0001(h・Ft²・°F/Btu).
Cond: EWT 85°F, flow rate 0.054 l/(s・kW), fouling factor 0.00025(h・Ft²・°F/Btu).
Capacity control range relate with specified job condition.

2、Within the scope of AHRI certification program, ratings are certified in accordance with AHRI 550/590. All other ratings are in accordance with AHRI 550/590. Corresponding AHRI certified selection program.

3、Standard: Power supply 380V/50Hz, Wye–Delta starter, 2 pass GB (Chinese national standard) code Evaporator and condenser Victaulic groove right side connection.

4、IPLV/NPLV=0.01*A+0.42*B+0.45*C+0.12*D (A: COP@100% load; B: COP@75% load;C: COP@50% load; D: COP@25% load ;)

5、Min Shipment size =(L+13+400)*(W+13+300)*(H+13+140) include packing wood skid for container shipment, this size is for transportation and plant room access.

6、Consult factory for 3 pass, ASME code vessel , Solid state starter.

7、Voltage tolerance: ± 10%, for other Volt ratings please refer to corresponding AHRI certified selection program.

8、Chiller size hereunder may be changed if it equips with solid state starter, 3 pass Evaporator or Condenser, flange ,water pipe left connection(in front of control panel), or suction line shut off valve. Please consult factory to get the exact size.

9、Model# in the table above omit CFST–B.

10、270.1/330.1/380.1/460.1 avail to 380V only,400/415V will coming soon.

* Single compressor chiller capacity use the compressor capacity control (25%~100% stepless control).
Dual compressor load can reach 12.5%, as two compressors share one Evaporator.
Please refer to latest software selection for actual chiller capacity control.

AHRI CERTIFIED® www.ahridirectory.org Water-Cooled Chillers AHRI Standard 550/590

4. PFS.C-B Technical Data

PFS.CFST-B technical data

Model			PFS325.2	PFS350.2	PFS380.2	PFS405.2	PFS430.2	PFS460.2	PFS490.2
Cooling capacity		kW	1100.0	1186.5	1325.3	1396.2	1472.1	1580.1	1689.1
Power input		kW	185.3	206.7	221.8	233.6	245.9	264.5	282.6
COP		100%	5.94	5.74	5.98	5.98	5.99	5.97	5.98
		75%	7.07	6.84	6.96	6.80	6.83	6.91	6.77
		50%	10.06	9.60	9.85	10.01	10.06	7.54	8.99
		25%	8.79	8.25	8.04	8.23	8.25	8.54	7.56
IPLV			8.61	8.24	8.38	8.41	8.44	7.38	7.85
Evap.flow rate		l/s	47.4	51.1	57.1	60.1	63.4	68.0	72.7
Evap. pressure drop		kPa	42.4	44.7	67.7	68.9	64.9	60.1	67.7
Cond. flow rate		l/s	59.2	63.9	71.3	75.1	79.2	85.0	90.9
Cond. pressure drop		kPa	54.9	55.6	61.8	64.6	70.8	71.6	71.9
Compressor	Type		Semi-hermetic Single Screw Compressor						
	Quantity		2	2	2	2	2	2	2
Starter type			Y-Δ						
Capacity control		%	12.5% ~ 100% stepless regulation						
Condenser	Type		Shell-And-Tube Flooded						
	Quantity		1	1	1	1	1	1	1
Evaporator	Type		Shell-And-Tube Flooded						
	Quantity		1	1	1	1	1	1	1
Refrigerant	Type		R134a						
	Charge	kg	350	380	495	495	565	565	595
Oil	Brand		McQuay oil E						
	Charge	L	85	85	120	120	120	120	120
Temp. Control			Evaporator Leaving water tempratrure PID						
Evap. Water Pipe		mm	ϕ219	ϕ219	ϕ219	ϕ219	ϕ219	ϕ219	ϕ219
Cond. Water Pipe		mm	ϕ219	ϕ219	ϕ219	ϕ219	ϕ219	ϕ219	ϕ219
Thermal insulation material			Polyurethane insulation						
Chiller weight		kg	5793	5848	8578	8613	8747	8747	8880
Operation weight		kg	6293	6360	9242	9277	9411	9411	9583
Rated load amps		A	309.6	344.4	369.8	393.5	418.0	448.5	478
Compressor Inrush		A	329.7	329.7	545.9	637.8	637.8	637.8	637.8
Max Inrush amps		A	495.7	495.4	732.7	824.6	846.8	878.0	876.8
Dimension L×W×H		mm	3764×1900×2297		4308×2098×2322		4308×1908×2278		

Note:

1、Above chiller cooling capacity is based on condition: Evap: LWT 44°F, flow rate 0.043 l/(s・kW), fouling factor 0.0001(h・Ft^2・°F/Btu).
Cond: EWT 85°F, flow rate 0.054 l/(s・kW), fouling factor 0.00025(h・Ft^2・°F/Btu).
Capacity control range relate with specified job condition.

2、Within the scope of AHRI certification program, ratings are certified in accordance with AHRI 550/590. All other ratings are in accordance with AHRI 550/590. Corresponding AHRI certified selection program.

3、Standard: Power supply 380V/50Hz, Wye-Delta starter, 2 pass GB (Chinese national standard) code Evaporator and condenser Victaulic groove right side connection.

4、IPLV/NPLV=0.01*A+0.42*B+0.45*C+0.12*D (A: COP@100% load; B: COP@75% load;C: COP@50% load; D: COP@25% load ;)

5、Min Shipment size =(L+13+400)*(W+13+300)*(H+13+140) include packing wood skid for container shipment, this size is for transportation and plant room access.

6、Consult factory for 3 pass, ASME code vessel , Solid state starter.

7、Voltage tolerance: ±10%, for other Volt ratings please refer to corresponding AHRI certified selection program.

8、Chiller size hereunder may be changed if it equips with solid state starter, 3 pass Evaporator or Condenser, flange ,water pipe left connection(in front of control panel), or suction line shut off valve. Please consult factory to get the exact size.

9、Model# in the table above omit CFST-B.

AHRI CERTIFIED® www.ahridirectory.org Water-Cooled Chillers AHRI Standard 550/590

* Single compressor chiller capacity use the compressor capacity control (25%~100% stepless control).
Dual compressor load can reach 12.5%, as two compressors share one Evaporator.
Please refer to latest software selection for actual chiller capacity control.

4. PFS.C-B Technical Data

PFS.CFME-B technical data

Model			PFS100.1	PFS120.1	PFS140.1	PFS160.1	PFS180.1	PFS200.1	PFS230.1	PFS255.1	PFS305.1
Cooling capacity		kW	345.0	415.2	471.3	545.6	614.9	685.5	778.4	879.4	1057.4
Power input		kW	65.7	79.0	88.6	102.9	116.8	130.1	148.0	166.0	194.7
COP		100%	5.25	5.26	5.32	5.30	5.26	5.27	5.26	5.30	5.43
		75%	6.44	6.43	6.53	6.52	6.29	6.29	6.36	6.12	6.23
		50%	7.29	7.29	7.41	7.40	6.90	7.02	6.79	6.79	6.88
		25%	6.69	6.70	6.85	6.83	5.40	5.53	5.22	5.78	5.84
IPLV			6.84	6.84	6.95	6.94	6.45	6.52	6.41	6.37	6.23
Evap.flow rate		l/s	14.9	17.9	20.3	23.5	26.5	29.5	33.5	37.9	45.5
Evap. pressure drop		kPa	39.5	12.22	44.3	44.9	42.7	46.5	51.7	56.7	64.0
Cond. flow rate		l/s	18.6	22.3	25.4	29.4	33.1	36.9	41.9	47.3	56.9
Cond. pressure drop		kPa	33.0	36.7	39.4	43.3	51.2	46.0	49.4	66.4	71.2
Compressor	Type		Semi-hermetic Single Screw Compressor								
	Quantity		1	1	1	1	1	1	1	1	1
Starter type			Y-Δ								
Capacity control		%	25% ~ 100% stepless regulation								
Condenser	Type		Shell-And-Tube								
	Quantity		1	1	1	1	1	1	1	1	1
Evaporator	Type		Shell-And-Tube Flooded								
	Quantity		1	1	1	1	1	1	1	1	1
Refrigerant	Type		R134a								
	Charge	kg	170	170	170	170	230	245	245	275	275
Oil	Brand		McQuay oil E								
	Charge	L	74	74	74	74	85	85	85	85	85
Temp. Control			EvaporatorLeavingwatertempraturePID								
Evap. Water Pipe		mm	ϕ168	ϕ168	ϕ168	ϕ168	ϕ219	ϕ219	ϕ219	ϕ219	ϕ219
Cond. Water Pipe		mm	ϕ168	ϕ168	ϕ168	ϕ168	ϕ219	ϕ219	ϕ219	ϕ219	ϕ219
Thermal insulation material			Polyurethane insulation								
Chiller weight		kg	3136	3172	3284	3319	4712	4787	4816	5442	5520
Operation weight		kg	3390	3442	3572	3615	5135	5210	5255	5972	6070
Rated load amps		A	112.4	132.8	148.1	171.4	194.1	220.6	250.0	293.9	340.8
Compressor Inrush		A	329.7	329.7	329.7	329.7	545.9	637.8	637.8	731.5	882.3
Max Inrush amps		A	329.7	329.7	329.7	329.7	545.9	637.8	637.8	731.5	882.3
Dimension L×W×H		mm	3340×1836×2050				3462×1914×2275			3454×2010×2345	

Note:

1、Above chiller cooling capacity is based on AHRI condition: Evap: LWT 44°F, flow rate 0.043 l/(s・kW), fouling factor 0.0001(h・Ft2・°F/Btu).
Cond: EWT 85°F, flow rate 0.054 l/(s・kW), fouling factor 0.00025(h・Ft2・°F/Btu).
Capacity control range relate with specified job condition.

2、Within the scope of AHRI certification program, ratings are certified in accordance with AHRI 550/590. All other ratings are in accordance with AHRI 550/590. Corresponding AHRI certified selection program.

3、Standard: Power supply 380V/50Hz, Wye-Delta starter, 2 pass GB (Chinese national standard) code Evaporator and condenser, Victaulic groove right side connection.

4、IPLV/NPLV=0.01*A+0.42*B+0.45*C+0.12*D (A: COP@100% load; B: COP@75% load; C: COP@50% load; D: COP@25% load ;)

5、Min Shipment size =(L+13+400)*(W+13+300)*(H+13+140) include packing wood skid for container shipment, this size is for transportation and plant room access.

6、Consult factory for 3 pass, ASME code vessel , Solid state starter.

7、Voltage tolerance: ±10%, for other Volt ratings please refer to corresponding AHRI certified selection program.

8、Chiller size hereunder may be changed if it equips with solid state starter, 3 pass Evaporator or Condenser, flange ,water pipe left .connection(in front of control panel), or suction line shut off valve. Please consult factory to get the exact size.

9、Model# in the table above omit CFME-B.

10、255.1/305.1 avail to 380V only,400/415V will coming soon.

*Single compressor chiller capacity use the compressor capacity control (25%~100% stepless control). Please refer to latest software selection for actual chiller capacity control.

5. Chiller Dimension

PFS100.1~170.1C-B

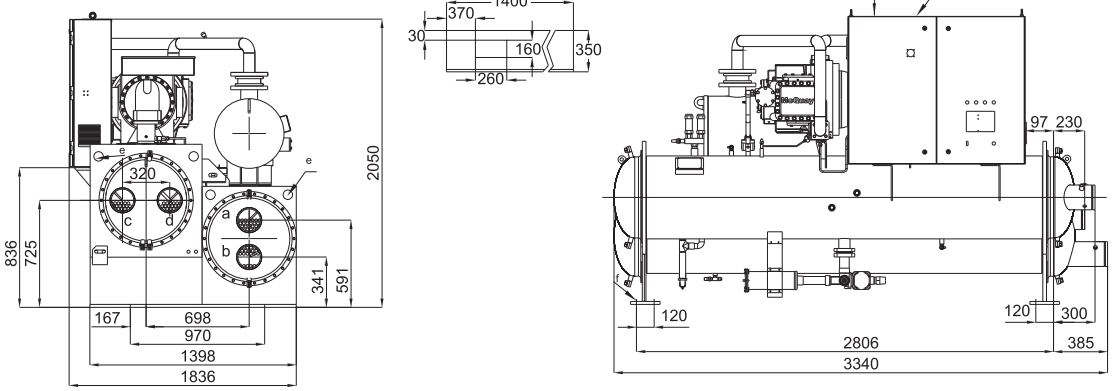

PFS180.1~245.1C-B

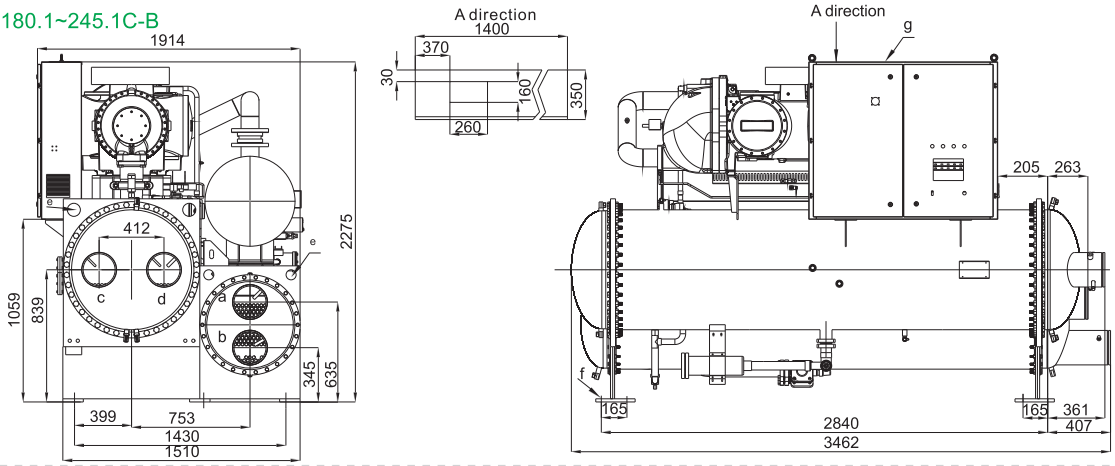

PFS255.1~330.1C-B

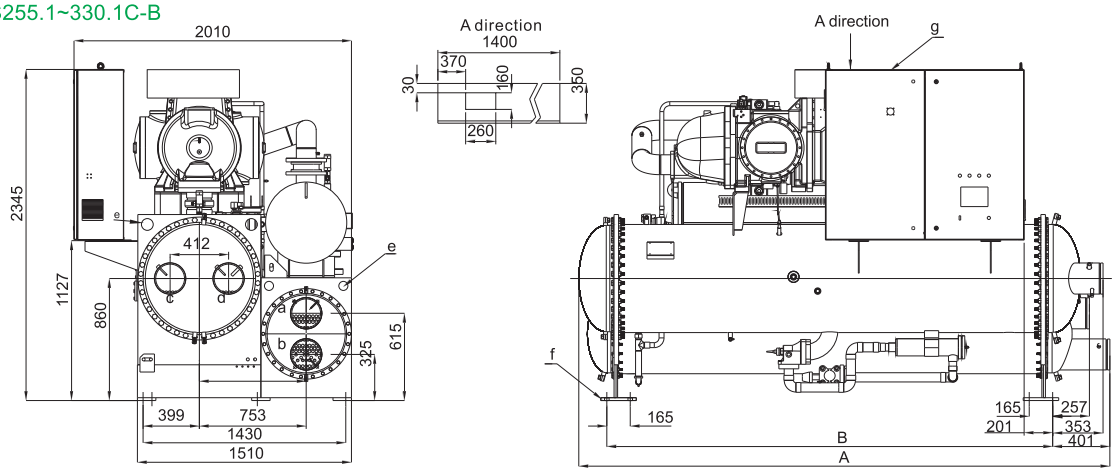

Model	A	B
PFS270.1~330.1C-B	3462	2840
PFS255.1~305.1C-B	3764	3141

a) Condenser water outlet b) Condenser water inlet c) Evaporator water inlet d) Evaporator outlet e) Lifting hole f) Mounting hole g) Starter power cable slot

Remark：

1) Above chiller dimensions base on 380V/50HZ PFS.C-B water cooled screw with Wye-Delta starter, 2 pass GB (Chinese national standard) code Evaporator and condenser，Victaulic groove right side connection.

2)Actual dimension will have an accumulated ≤±13mm tolerance comparing with design size due to components/chiller manufacturing tolerance exist.

3)Consult factory for chiller size with 3 pass，ASME code vessel , Solid state starter,other special configurations.

5. Chiller Dimension

PFS380.1&460.1C-B

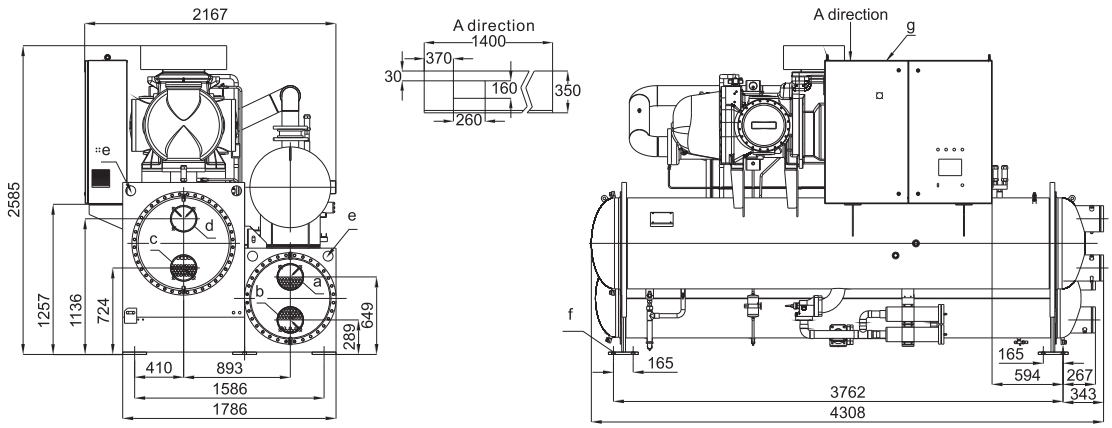

PFS265.2~350.2C-B

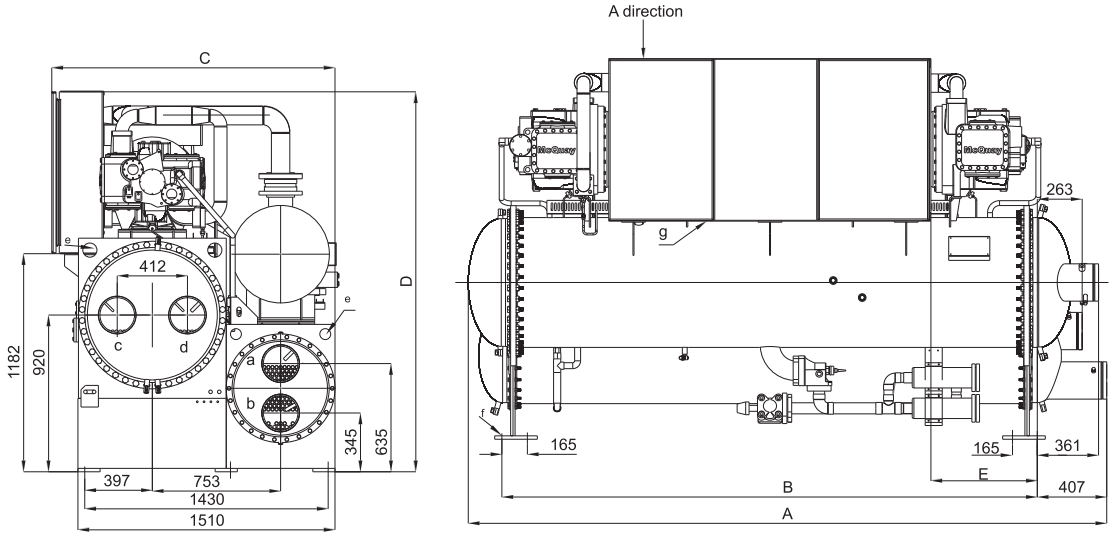

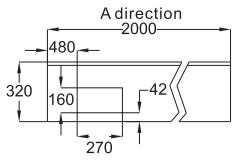

PFS265.2C-B

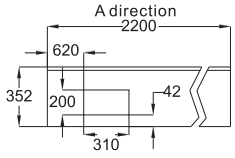

PFS280.2~350.2C-B

Model	A	B	C	D	E
PFS265.2C-B	3462	2840	1870	2180	175
PFS280.2~350.2C-B	3764	3145	1900	2297	228

a) Condenser water outlet b) Condenser water inlet c) Evaporator water inlet d) Evaporator outlet e) Lifting hole f) Mounting hole g) Starter power cable slot

Remark：

1) Above chiller dimensions base on 380V/50HZ PFS.C-B water cooled screw with Wye-Delta starter, 2 pass GB (Chinese national standard) code Evaporator and condenser，Victaulic groove right side connection.

2)Actual dimension will have an accumulated ≤±13mm tolerance comparing with design size due to components/chiller manufacturing tolerance exist.

3)Consult factory for chiller size with 3 pass，ASME code vessel , Solid state starter,other special configurations.

5. Chiller Dimension

PFS380.2~405.2C-B

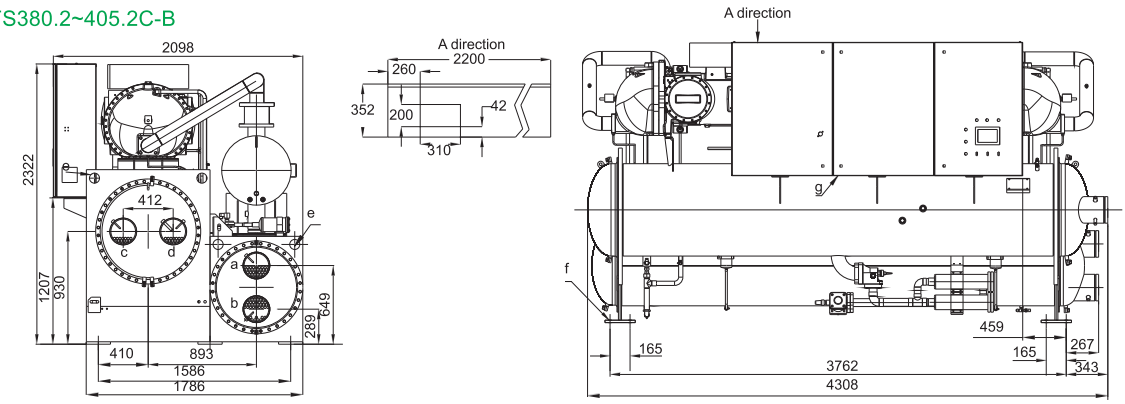

PFS430.2~490.2C-B

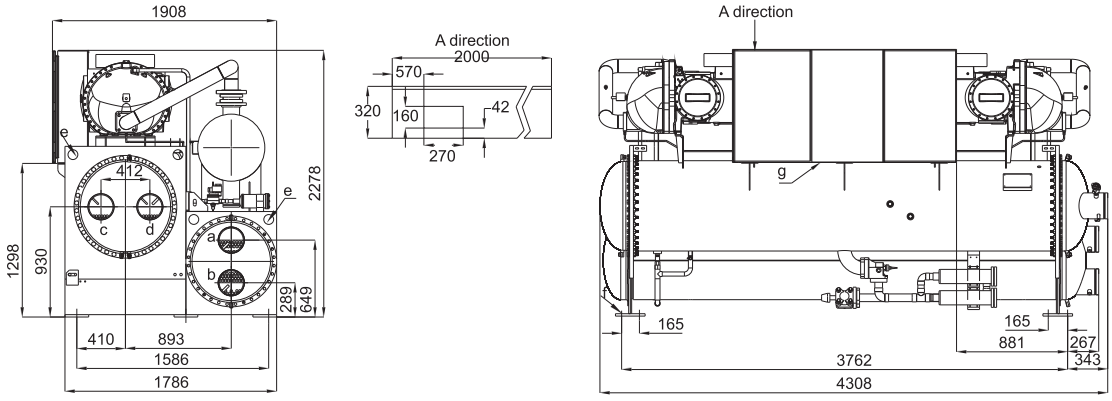

a) Condenser water outlet b) Condenser water inlet c) Evaporator water inlet d) Evaporator outlet e) Lifting hole f) Mounting hole g) Starter power cable slot

Remark：

1) Above chiller dimensions base on 380V/50HZ PFS.C-B water cooled screw with Wye-Delta starter, 2 pass GB (Chinese national standard) code Evaporator and condenser，Victaulic groove right side connection.

2)Actual dimension will have an accumulated ≤±13mm tolerance comparing with design size due to components/chiller manufacturing tolerance exist.

3)Consult factory for chiller size with 3 pass，ASME code vessel , Solid state starter,other special configurations.

6. Accessory

6.1 Standard accessories (furnished on basic unit)

6.1 .1 Unit part

- GB vessel code：Vessels constructed under Chinese standard
- 2-pass evaporator and condenser design
- Discharge line check valve
- Water side working pressure1.0MPa. Vessel constructed under Chinese vessel code
- Water connection：Victaulic connection gloove ready

6.1.2 Electric part

- Star-delta compressor starter and control panel： Low inrush current,reduce starting torque
- Compressor thermal relay：Insures protection from over current condition
- Phase monitor: Sense phase sequence and phase loss and shuts down system

6.1.3 Other part

- Insulation： Factory finished 3/4” insulation on evaporator and cold surfaces
- Wood shipping skid with bagging for container shipment: units will be covered with protective shield which has moisture inhibitors that help protect the unit against corrosion and rust.Wooden skid are required to facilitate handling of the product in transit
- Initial oil and R134a refrigerant precharge
- 100% factory preformance test,report not include



6.2 Optional accessories (On request)

6.2.1 Unit part

- ASME vessel code：Vessels constructed under ASME standard
- 3-pass evaporator and condenser
- Marine water box： Change the direction of water pipe connection in tight plant space

6.2.2 Electric part

- Solid state starter：Electronic device to provide smooth start
- Ground fault contactor：monitors the motor current for residual ground fault currents
- Multi-function meter：Digital meters installed on the electrical control panel. display voltage,current and power consumption
- Power factor correction capacitors：Calibrate power factor Communication:Modbus/Bacnet
- Flow switch：Pressure differential flow switch (unit mounted) or paddle type flow switch (to be mounted at site)
- 4-20mA demand limit
- Chilled water reset: Provide a function of remote water temperature reset.
- General fault relay:output fault signal

6.2.3 Other part

- Extended warranty：1-4 years warranty extension, compressor only or entire units
- Factory certified testing： AHRI certified test at AHRI or customized condition, 1~4 point ,test report, witness available on request

*Please consult local sales for more options.

7.Installation Notes

- Installation and maintenance are to be performed only by qualified personnel who are familiar with local codes and regulations, experienced with this type of equipment, and authorized by McQuay or its distributions.

7.1 Handling

- The chiller is shipped on heavy wooden skids to protect the unit from accidental damage and to permit easy handling and moving. It is recommended that all moving and handling be performed with the skids under the unit when possible and that the skids not be removed until the unit is in the final location. If the unit must be hoisted, it is necessary to lift the unit by attaching cables or chains at the lifting holes in the evaporator tube sheets. Spreader bars must be used to protect the control cabinet and the other areas of the chiller. Refer to latest version of PFS.C-B-IOMM

7.2 Location

- A horizontal and sufficiently strong ground is required.
- Rubber-in-shear isolators can be furnished and field placed under each corner of the package. Vibration isolators on all water piping connected to the chiller are recommended to avoid straining the piping and transmitting vibration and noise. Refer to latest version of PFS.C-B-IOMM for the typical drawings.

7.3 Chiller mounting points

- The unit must be mounted on a horizontal concrete or steel base and must be located to provide sufficient service clearances. Refer to figure below and table below for chiller clearances. The shaded parts in figure below represent the clearance requirements.

Chiller service clearances diagram

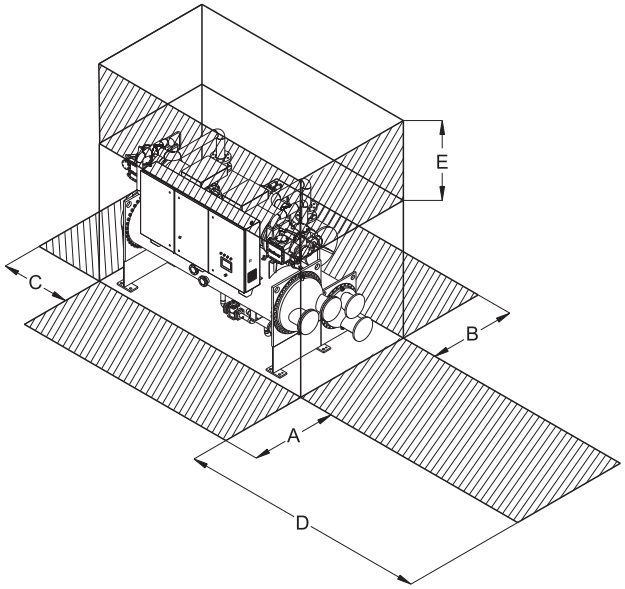

Service clearances Table

Chiller direction	Service Clearance (mm)
A–Front (where the electrical cabinet is located)	⩾1200
B–Rear	⩾1000
C–Left	⩾1500 (Left or right)
D–Right (where the water piping connection is located)	※(for tube replacement)
E–Top	⩾500

Model	※ (mm)
PFS100.1~170.1	⩾2800
PFS180.1~265.2	⩾2800
PFS270.1~350.2	⩾3100
PFS380.2~490.2	⩾3700

7.Installation Notes

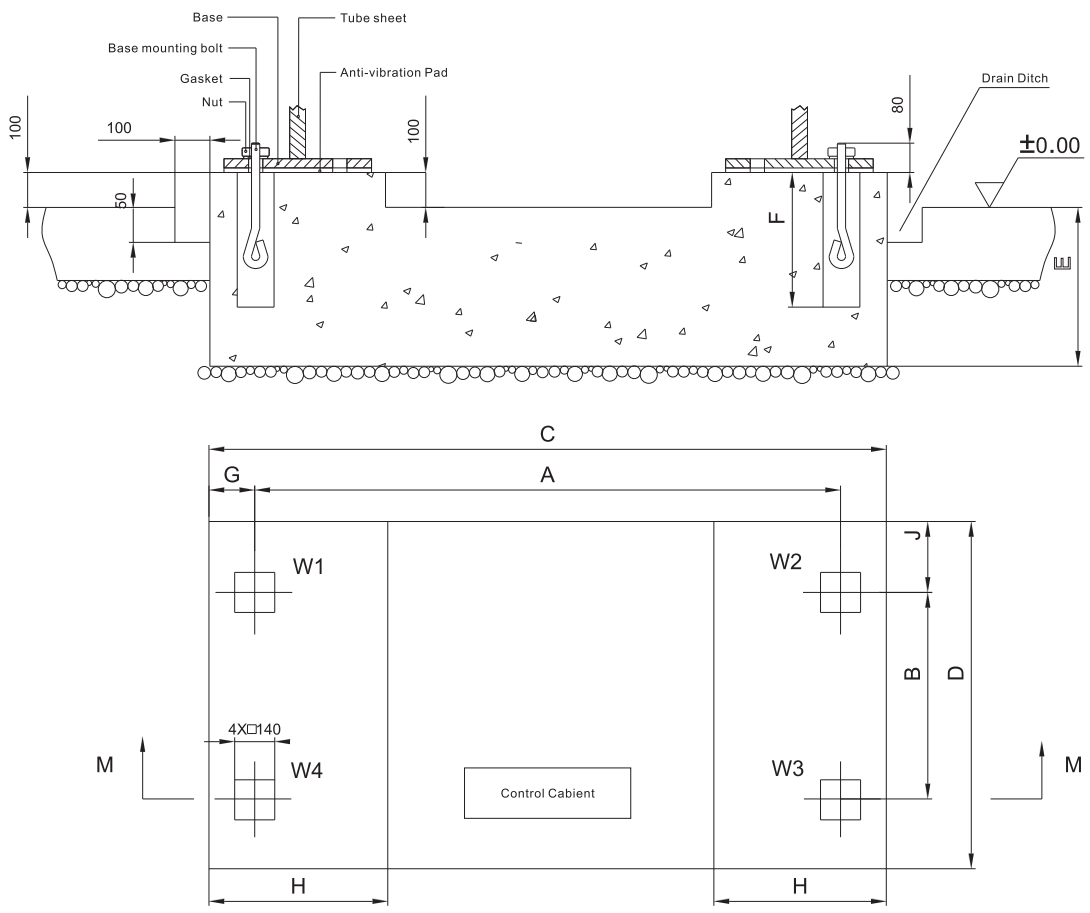

Make sure that the ground support where the chiller will be placed is adequate in size and is able to support the full operating weight of the complete unit.

Chiller mounting location

unit：mm

	PFS.CFST–B				PFS.CFME–B	
Model#	PFS110.1~170.1	PFS190.1~265.2	PFS270.1~350.2	PFS380.1~490.2	PFS100.1~160.1	PFS180.1~305.1
A	2806	2840	3145	3762	2806	2840
B	970	1430	1430	1586	970	1430
C	3206	3240	3545	4162	3206	3240
D	1370	1830	1830	1986	1370	1830
E	450	450	450	450	450	450
F	350	350	350	350	350	350
G	200	200	200	200	200	200
H	500	500	500	500	500	500
J	200	200	200	200	200	200
Mounting bolt	4 X M27 X 400					

Chiller mounting point load

	PFS.CFST–B						PFS.CFME–B	
Bearing partition	110.1~170.1	190.1 ~270.1	330.1	380.1 & 460.1	265.2~350.2	380.2~490.2	100.1~160.1	180.1~305.1
W1	23%	24%	23%	25%	23%	22%	23%	24%
W2	24%	23%	23%	23%	23%	22%	24%	23%
W3	28%	28%	27%	25%	27%	28%	28%	28%
W4	25%	25%	27%	27%	27%	28%	25%	25%

Note:Above table shows the percentage of the chiller weight in four fulcrums when chiller is running.

7.4 Field wiring

- Wire sizes must comply with local and related electrical codes. Main power wiring between starter and motor terminal is factory-installed.
- We've supplied many optional input / output signals, such as evaporator/condenser pump relay, flow switch etc.There still exist some parts require field wiring, for example, remote on/off control of unit can be accomplished by installing a set of dry contacts between terminals.

Typical Field Wiring Diagram

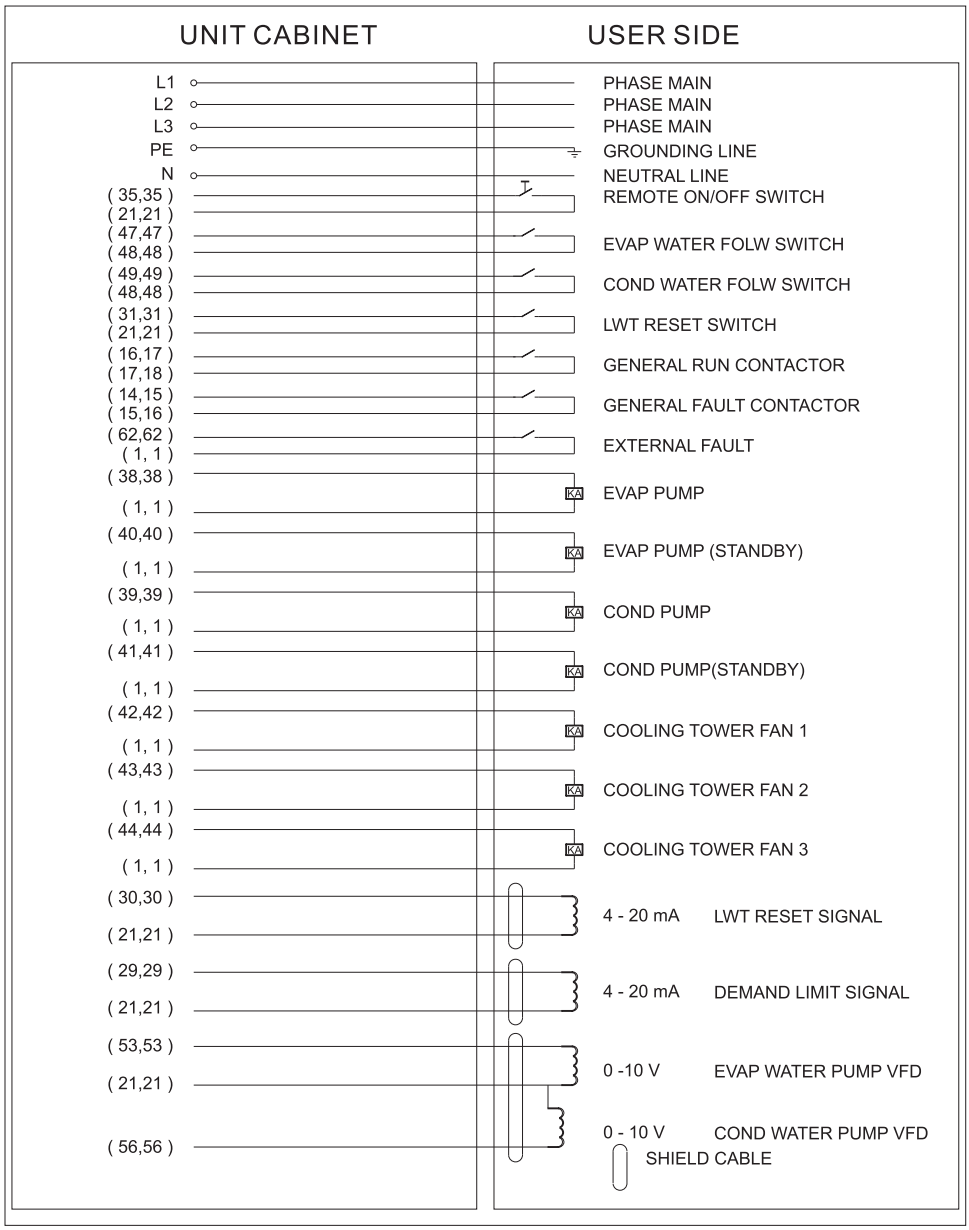

Note:
1. (NO1,NO2) means the corresponding terminal for (PFS.1, PFS.2);
2. For specified chiller, field wiring should comply with the wiring diagram.
3. ELWT： Evaporator Leaving Water Temperature

7.Installation Notes

7.5 Relief valve

Vessel relief valves

- Relief valve connection sizes are 1-inch NPT for the evaporator and oil separator. All relief valves shall be piped to the outside of the building in accordance with ANSI/ASHRAE 152001. The new 2001 standard has revised the calculation method compared to previous issues.
- Twin relief valves, mounted on a transfer valve, are used on the vessel so that one relief valve can be shut off and removed for testing or replacement, leaving the other in operation. Only one of the two valves is in operation at any time.
- Vent piping is sized for only one valve of the set since only one can be in operation at a time.

Relief pipe sizing (ASHRAE Method)

- Relief valve pipe sizing is based on the discharge capacity for the given evaporator or condenser and the length of piping to be run.
- Since the pressures and valve size are fixed for McQuay chillers, the ASHRAE equation can be reduced to the simple table shown below:

Typical Vent Piping

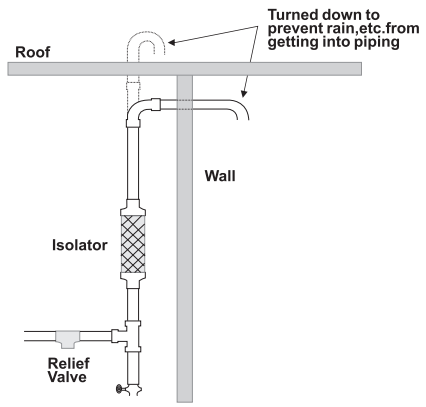

Pipe Size inch (NPT)	1 1/4	1 1/2	2	2 1/2	3	4
Moody Factor	0.0209	0.0202	0.0190	0.0182	0.0173	0.0163
Equivalent length (ft)	2.2	18.5	105.8	296.7	973.6	4117.4

$$D_{Common} = (D_1^2 + D_2^2 \cdots D_n^2)^{0.5}$$

The above information is a guide only. Consult local codes and/or latest version of ASHRAE Standard 15 for sizing data.

NOTE:
A 1-inch pipe is too small to handle these valves. A pipe increaser must be installed at the valve outlet.

Per ASHRAE Standard 15, the pipe size cannot be less than the relief device. The discharge from more than one relief valve can be run into a common header, the area of which shall not be less than the sum of the areas of the connected pipes. For further details,refer to ASHRAE Standard 15. The common header can be calculated by the formula.

7.6 Start-up

- Start-up must be done by McQuay authorized engineers or technician in strict accordance with Installation Operation & Maintenance Manual.

7.7 Warranty

- McQuay standard warranty period is within 18 months of chiller ex-factory or 12 months of chiller first start-up, whichever comes first.
- Extended warranty on entire unit or compressor only for 1-4 years will be available as option.

7.8 Application Environment

Standard application
Chiller's Standard running environment is as below:

Voltage fluctuation	±10%(constant rated frequency)
Voltage phase unbalance rate	≦5%
Frequency	±5%(constant rated frequency)
Working temp	3~40(chiller installation room temp)
Relative humidity	≦90%, no condensed water
Altitude	＜1000m(ultrahigh altitude will affect electrical insulation & conductivity and need to take into consideration)
Atmospheric corrosion gas composition	sulfur dioxide≦10 mg/m^3, hydrogen fluoride ≦5 mg/m^3 , sulfuretted hydrogen≦5 mg/m^3; nitrogen oxides≦5 mg/m^3, chlorine≦1mg/m^3, hydrogen chloride≦5 mg/m^3
Installation	Indoor installation and avoid directly rained or sunshine(contact McQuay sales branch for special design if chiller needs to be installed outdoor or near seaside/high concentration of corrosive gas environment such as chemical factory,ect)

8.Product Specifications

Part 1 General

1.01 Summary

- Section includes design, performance criteria, refrigerants, controls, and installation requirements for water-cooled screw compressor packaged chillers.

1.02 References

- Comply with applicable Standards/Codes of AHRI 550/590.

1.03 Submittals

A. Submit shop drawings and product data in accordance with contract Specifications.

B. Submittals shall include the following:

(1) Dimensioned plan and elevation view drawings, required clearances, and location of all field connections.

(2) Summary of all auxiliary utility requirements such as: electricity, water, compressed air, etc. Summary shall indicate quality and quantity of each required utility.

(3) Single-line schematic drawing of the field power hookup requirements, indicating all items that are furnished.

(4) Schematic diagram of control system indicating points for field connection. Diagram shall fully delineate field and factory wiring.

(5) Installation, Operation and Maintenance Manual.

1.04 Quality assurance

A. Qualifications: Equipment manufacturer must specialize in the manufacture of the products specified and has five years' experience with similar equipment and the refrigerant offered.

B. Regulatory Requirements: Comply with the codes and standards specified.

C. The chiller manufacturing facility has been ISO certified.

D. Factory running performance test before ex-factory.

1.05 Delivery and handling

A. Chillers shall be delivered to the job site completely assembled and charged with refrigerant and oil by the manufacturer.

B. Comply with the manufacturer's instructions for rigging and handling equipment.

1.06 Warranty

- The equipment manufacturer's warranty shall be for a period of 12 month from date of equipment start-up but not more than 18 months from shipment. The warranty shall cover defective material and workmanship within the above period, excluding refrigerant and oil.

Option The equipment manufacturer's warranty shall be for a period of 2 To 5 years from date of equipment start-up but not more than 18 to 66 months from shipment. The warranty shall cover defective material and workmanship within the above period, entire unit excluding refrigerant and oil.

Option After standard 12/18 month entire unit warranty above mentioned, the equipment manufacturer's warranty shall extend another period of 4 years. The warranty shall cover defective material compressor only and workmanship within the above period,

8.Product Specifications

Part 2 Products

2.01 Acceptable manufacturers

Basis of Design - McQuay Model PFS.B-C, including the standard product features and all special features required per the plans and specifications.

2.02 Unit description

- Provide and install as shown on the plans, factory assembled, factory charged, and factory run-tested water-cooled screw compressor packaged chillers in the quantity and size specified. Each chiller shall consist of one or more semi-hermetic, rotary screw compressors; one shell-and-tube evaporator; one shell-and-tube water-cooled condenser, control system and all components necessary for controlled unit operation. Rubber pad vibration isolators will be provided.

Option: Spring vibration isolators for field installation per plans.

2.03 Design requirements

A. General: Provide a complete screw compressor packaged chiller as specified herein and as shown on the drawings. The unit(s) shall be in accordance with the standards referenced in section 1.02 and any local codes in effect.

B. Performance: Refer to the schedule of performance on the drawings. Performance shall be in accordance with applicable AHRI Standard.

2.04 Chiller components

A. Compressors: The compressors shall be semi-hermetic, single rotor, rotary screw type. Compressors must be manufactured by the chiller manufacturer, if not then the chiller manufacturer must provide a five year parts and labor warranty on the compressor.

B. Electric Motors: Compressor motors shall be high torque, two pole Semi-, hermetic, squirrel cage induction type with inherent thermal protection on all three phases and cooled by suction gas.

C. Wye-Delta Starter: Starter shall be capable of starting the compressor under all load conditions.
Compressor motors will be protected internally with thermal sensors and externally with an overload relay. Starters will also be equipped with a phase failure and phase reversal protection device that will safely shut down the Compressor.

Option: Solid State Starter unit mounted to generate smooth start.

D. Evaporator: The evaporator shall be of the flooded design, 2-pass, shell -and-tube type with copper tubes rolled into steel tube sheets. It shall be Insulated with 3/4 inch (19 mm) closed cell polyurethane insulation and designed for 150 psi (1034 kPa) water side working pressure and 203 psi (1400 kPa) refrigerant side pressure. It shall be designed in accordance with China Pressure Vessel Codes (GB Code) and equipped with spring loaded relief valves. And inlet right hand with Victaulic connection (groove only) when viewed from control panel.

Option: ASME code.

Option: 3-pass design.

Option: Marine water box instead of standard water heads.

Option: The evaporator shall have 38 mm closed cell polyurethane insulation in lieu of standard 3/4 inch (19 mm).

Option: Evaporator shall have left-hand water connection when viewed from the control panel.

Option: ANSI flanged connections 1 or 2 pieces.

E. Condensers: Horizontal shell and finned tube type with steel shell and integral finned copper tubes rolled into steel tube sheets. The condenser shall be equipped with intermediate tube supports and construct in accordance with the requirements of China Pressure vessel Codes It shall be designed for 150 psi (1034 kPa) water side working pressure and 203 psi (1400 kPa) refrigerant side pressure. It shall have pressure relief Valves.

Option: ASME code.

Option: 3-pass design.

Option: Marine water box instead of standard water heads.

Option: Condenser shall have left-hand water connection when viewed from the control panel.

Option: ANSI flanged connections 1 or 2 pieces.

F. Refrigerant Circuit: The unit shall be equipped with one or more compressors, one microprocessor controller, a factory-mounted control circuit transformer, oil separator, discharge check valve, liquid line shutoff valves, replaceable core filter-dryers, sight-glass with moisture indicator.

Option: Each Compressor shall have a suction service shutoff valve and a ball valve on injection valve.

G. Electric Panel: The control section shall contain a microprocessor controller providing operating and equipment protection controls.
The power section shall include wye-delta motor starters, a control transformer with primary and secondary fusing, and microprocessor transformers with fusing, standard power blocks. The control panel shall have a hinged, tool-locked door.

The control system shall stage and load the compressors based on the leaving water temperature. Equipment protection devices controlled by the microprocessor shall include motor protection, high pressure, loss of water flow, freeze protection, and low refrigerant pressure. Controls shall include auto/stop switch, chilled water set point adjustment, anti-recycle timer, and digital display with water temperature and set point, operating temperatures and pressures, and diagnostic messages.

The following features and functions shall be included:

1. The control logic shall be designed to maximize operating efficiency and equipment life with protections for operation under unusual conditions. The system shall intelligently stage the unit to sustain leaving water temperature precision and stability while minimizing compressor cycling.

2. The following features and functions shall be included:

a. Password protection for set point adjustment.

b. Durable colorful liquid crystal display (LCD) screen type mounted on The unit controller. Default language and units of measure shall be English and I-P respectively. Messages shall be in plain English. Coded Messages, LED indicators and LED displays are not acceptable.

c. Option: Soft-load operation, protecting the compressor by preventing full-load operation during the initial chilled fluid pull-down period.

d. Option: BAS communication through Protocol Selectability. Optional modular plug-ins that enable the unit controller to communicate using standardized protocols such as Modbus, BacNet without a separate Gateway.

e. Non-volatile program memory allowing auto-restart within 2 months after a power failure without requiring a UPS (un-interruptible power Supply).

f. Start-to-start and stop-to-start cycle timers,providing minimum Compressor Off-time while maximizing motor protection.

g. Must have a lead-lag function with factory supplied compressor staging For part-load operation by manual selection or automatically by circuit run hours.

h. Pro-active compressor unloading when selected operating parameters exceed design settings, such as high discharge pressure or low evaporator Pressure.

i. Diagnostic monitoring of unit operation, providing a pre-alarm signal in advance of a potential shutdown, allowing time for corrective action.

Chilled water flow switch to be field mounted in the chilled water line and field wired to terminals in the control panel.

Part 3 Execution

3.01 Installation

Make sure chiller is installed as per below requirements, otherwise rectifying measures must be taken.

A. Install in strict accordance with manufacturer's requirements, shop drawings, and contract documents.

B. Adjust and level chiller in alignment on supports.

C. Coordinate electrical installation with electrical contractor.

D. Coordinate controls with control contractor.

E. Provide all appurtenances required to ensure a fully operational and functional chiller.

F. Local water quality & power supply under regular air condition system standard.

3. 02 Start-up

A. Only can be conducted by manufacture's authorized engineer.

B. Ensure proper charge of refrigerant and oil.

C. Provide testing, and starting of machine, and instruction to the Owner in its proper operation and maintenance.

9.Typical Project



2008 Beijing Olympic park center



Dongyang people's hospital



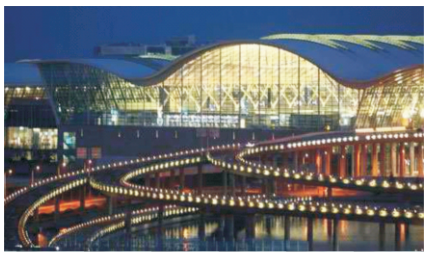



Suzhou Subway





Guangzhou Baiyun Airport



Sanya Beauty Crown Hotel

9.Typical Project



Beijing Bairong Plaza



Shanghai Gold rich square





Hyderabad International Airport in India



DongFeng Honda



Global Petro Chemical Co.,Ltd



Foxconn

www.mcquay.com.cn

McQuay Air-Conditioning & Refrigeration (Wuhan) Co., Ltd
CheCheng Ave 33#, Economic & Technological Development Zone, Wuhan 430056, PRC.
Fax: +86-27-5940 8788
Tel: +86-27-5940 8791
www.McQuay.com.cn

Performance data shown in this manual is for reference purpose only and is correct at the time of print. Refer to the latest version of chiller selection software for performance data at the time of manufacturing.

McQuay reserve the right to make changes in design and construction at any time without notice, thus the cover picture is not binding.