LGH-RX5-E

1. DIMENSIONS ..... 1 - 192
2. PERFORMANCES ..... 1 - 194
3. SPECIFICATIONS ..... 1 - 197
4. SAMPLE INSTALLATIONS ..... 1 - 200
5. WIRING DIAGRAMS ..... 1 - 201

LOSSNAY is a perfect combination of heat recovery and ventilation, which is a leading edge product in the ventilation and air-conditioning field.

The LOSSNAY core is a special preserved paper made cross-flow and plate-fin structure, which is referable below.

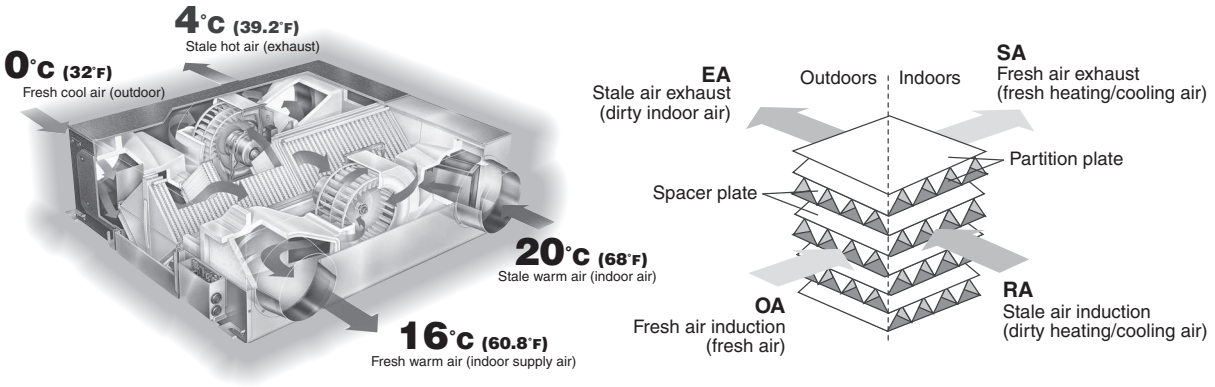

CITY MULTI can combine LOSSNAY into the air conditioning system, performing the best solution to ventilation and air-conditioning.

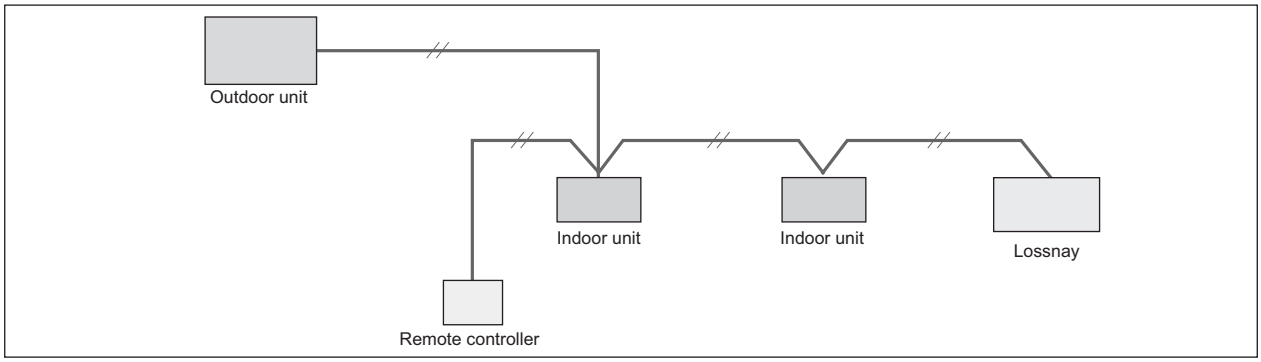

Line up of LOSSNAY units

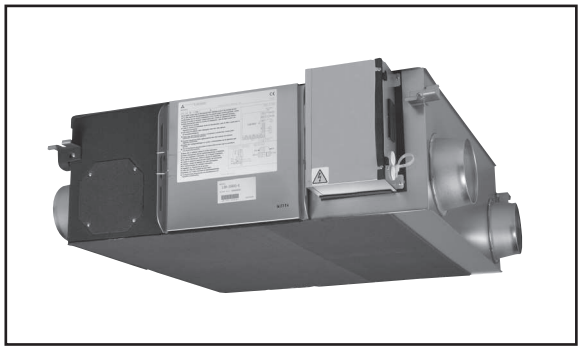

LGH-15RX5 [150m^3/h Single phase 220-240V 50Hz]
LGH-25RX5 [250m^3/h Single phase 220-240V 50Hz]
LGH-35RX5 [350m^3/h Single phase 220-240V 50Hz]
LGH-50RX5 [500m^3/h Single phase 220-240V 50Hz]
LGH-65RX5 [650m^3/h Single phase 220-240V 50Hz]
LGH-80RX5 [800m^3/h Single phase 220-240V 50Hz]
LGH-100RX5 [1000m^3/h Single phase 220-240V 50Hz]
LGH-150RX5 [1500m^3/h Single phase 220-240V 50Hz]
LGH-200RX5 [2000m^3/h Single phase 220-240V 50Hz]

1. DIMENSIONS

(Unit : mm)

LGH-15RX5-E

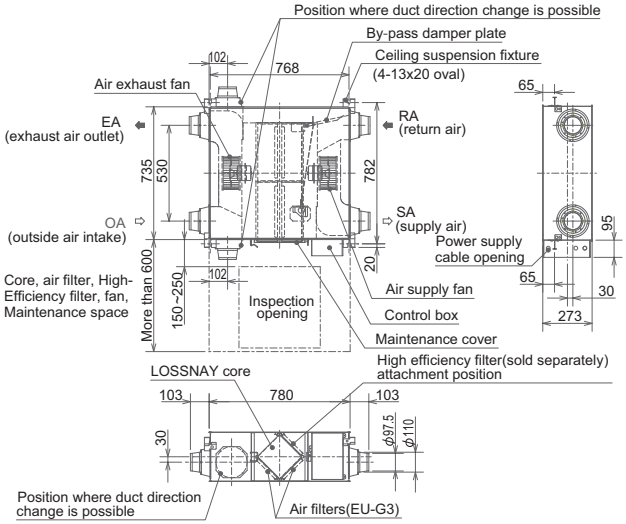

LGH-25RX5-E

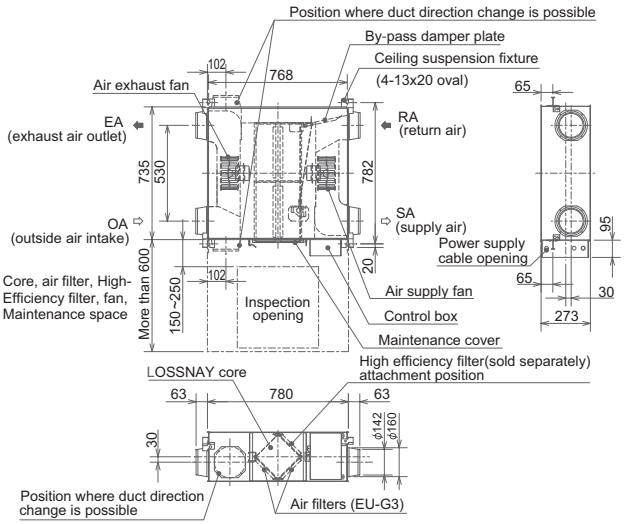

LGH-35RX5-E

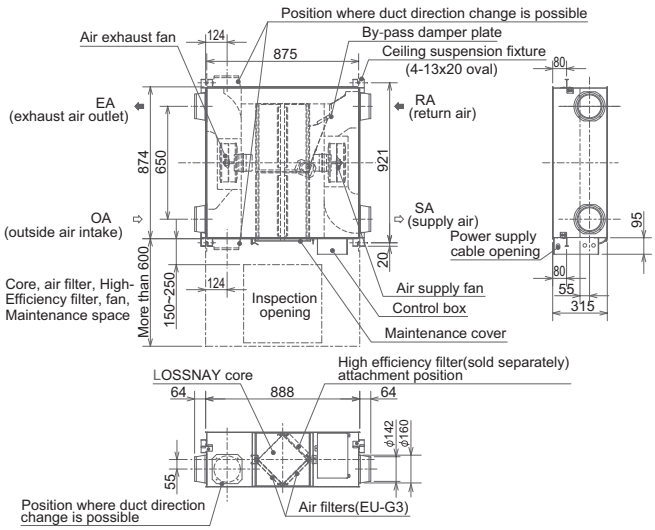

LGH-50RX5-E

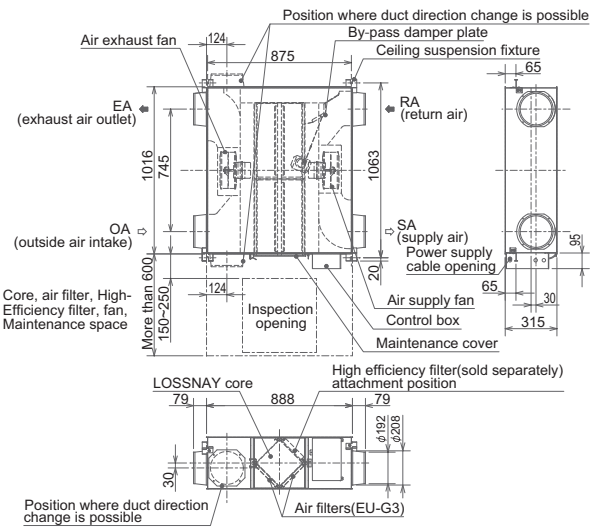

LGH-65RX5-E

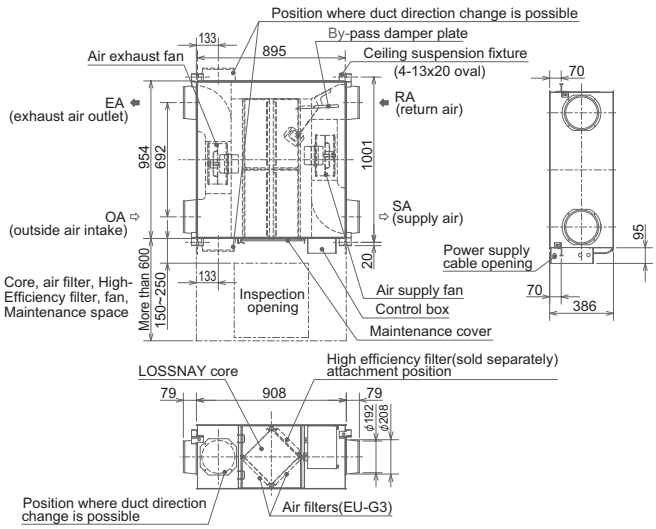

LGH-80RX5-E

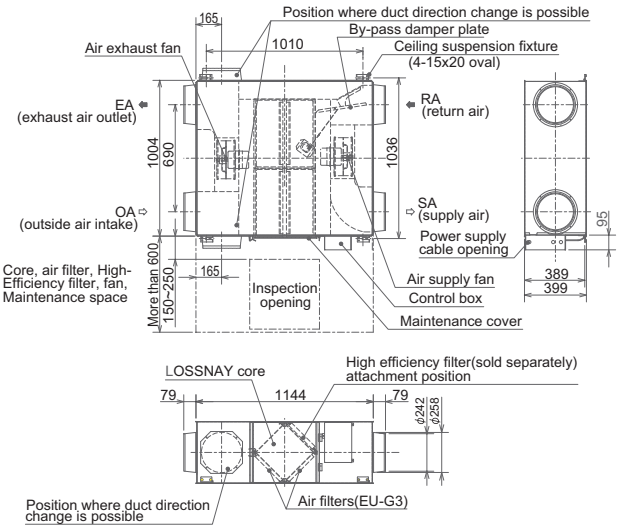

Lossnay

(Unit : mm)

LGH-100RX5-E

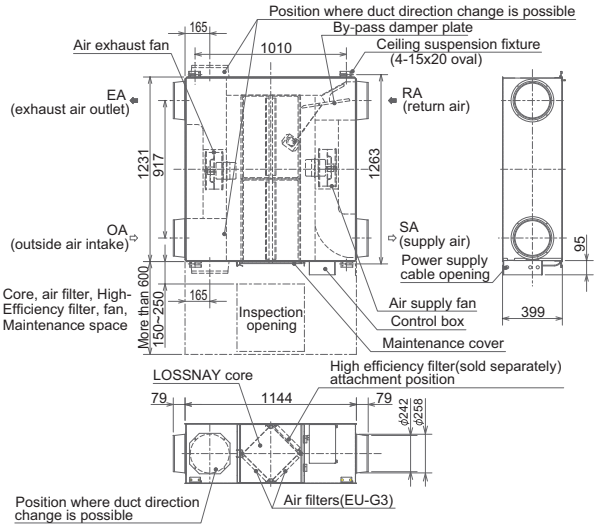

LGH-150RX5-E

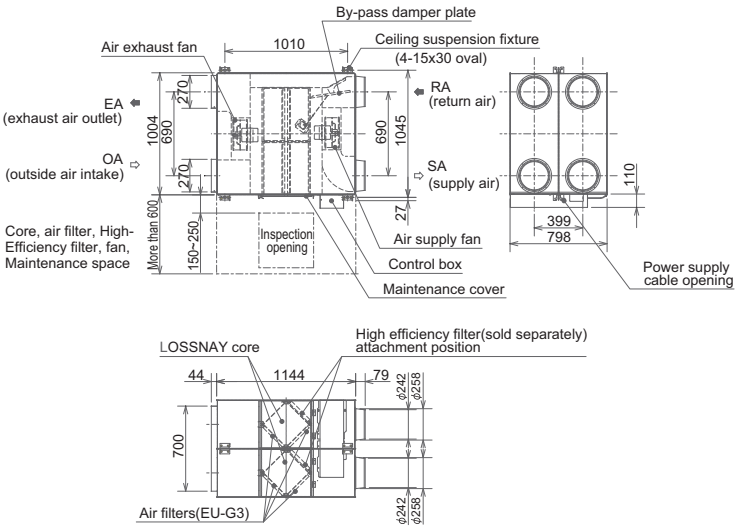

LGH-200RX5-E

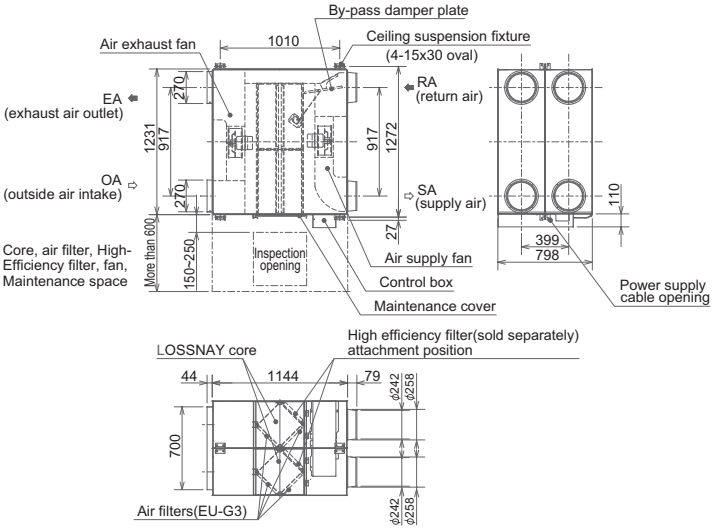

Lossnay

LGH-15RX5-E

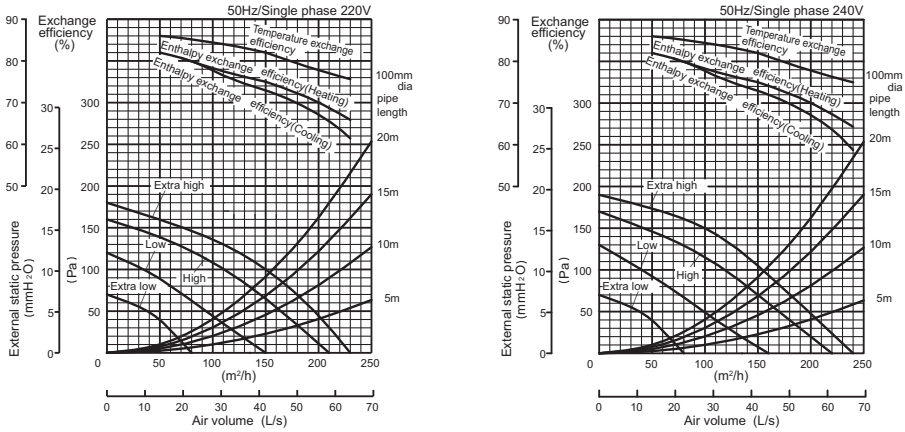

LGH-25RX5-E

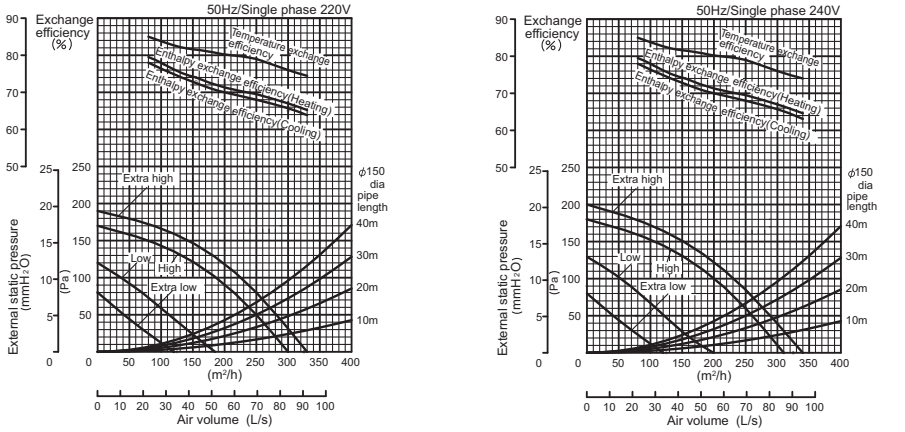

LGH-35RX5-E

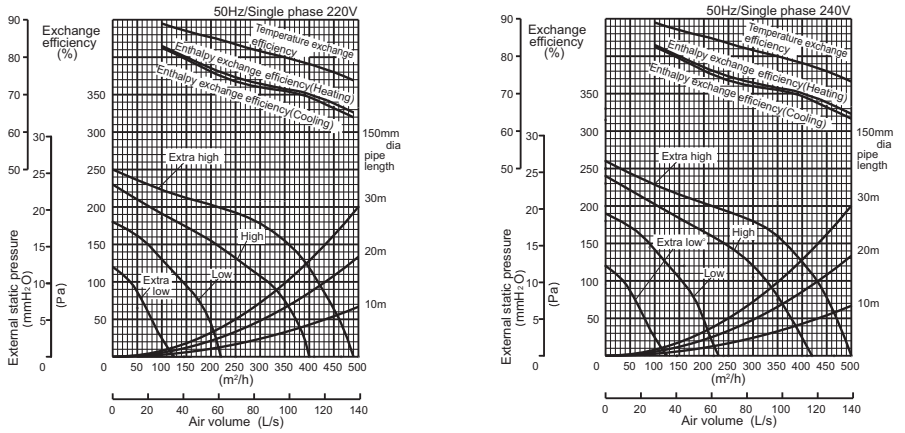

LGH-50RX5-E

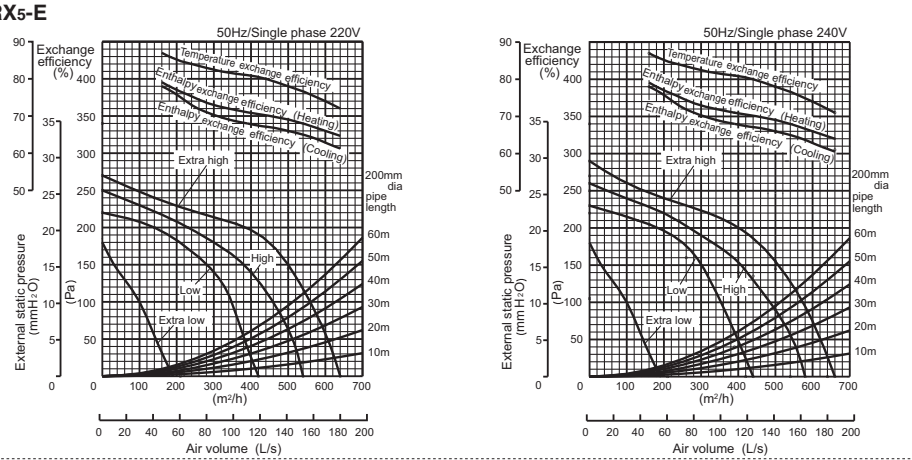

Lossnay

LGH-65RX5-E

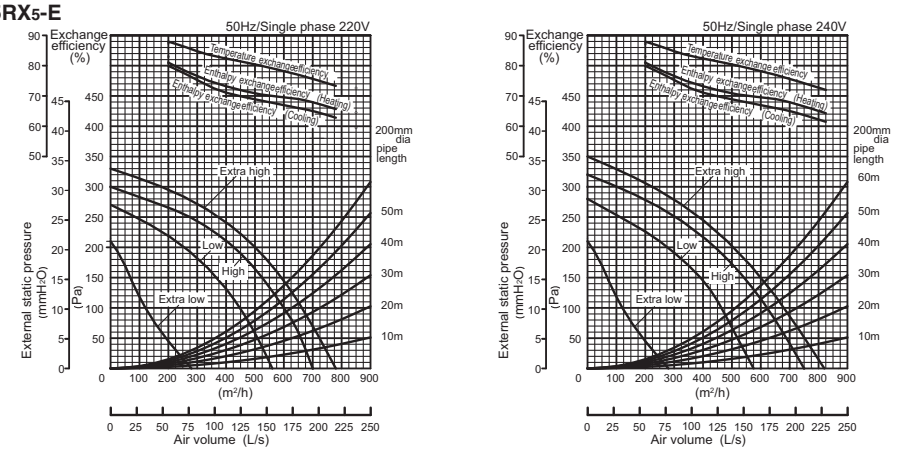

LGH-80RX5-E

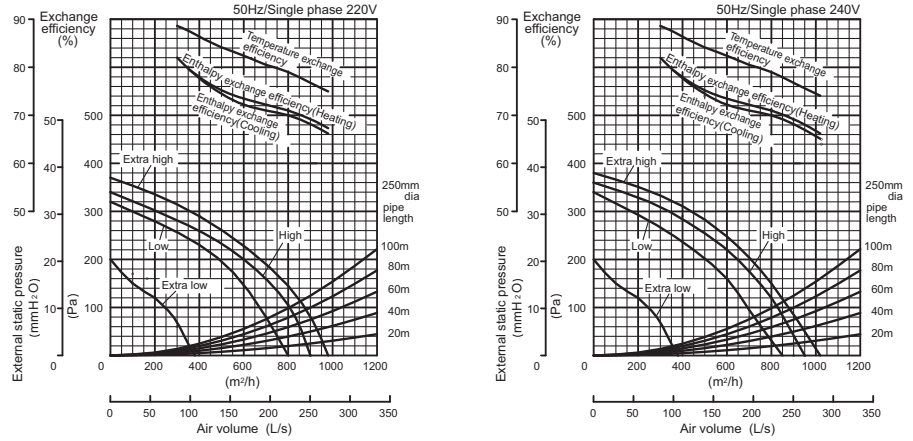

LGH-100RX5-E

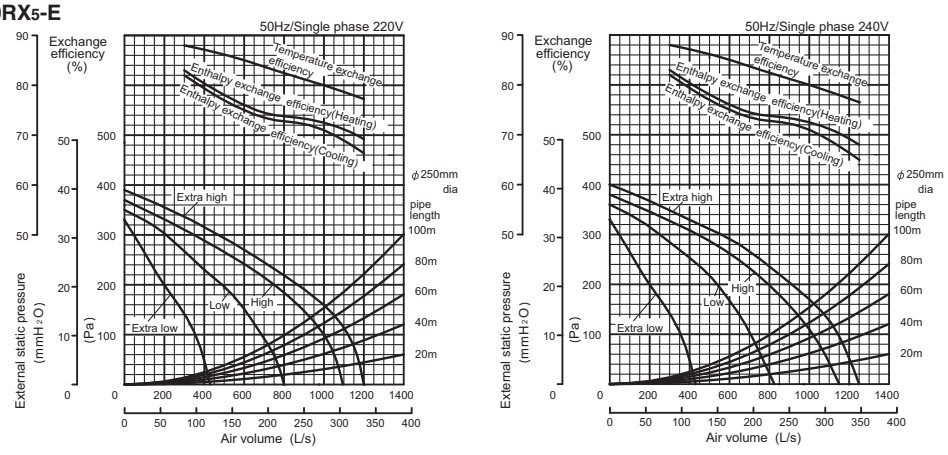

LGH-150RX5-E

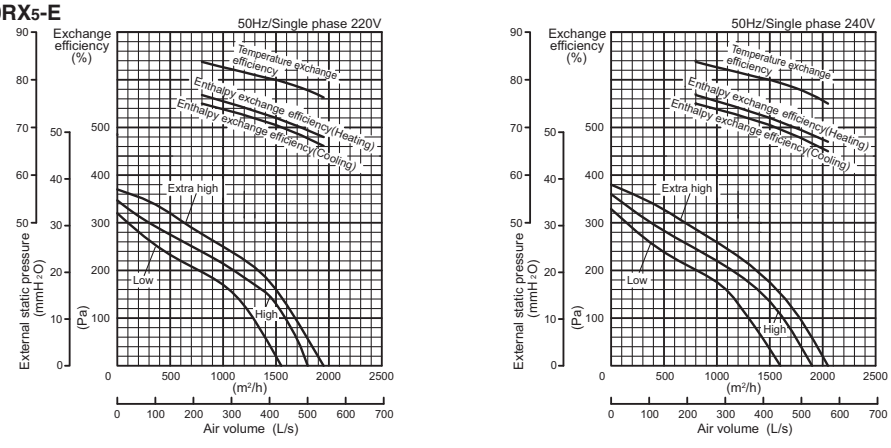

Lossnay

LGH-200RX5-E

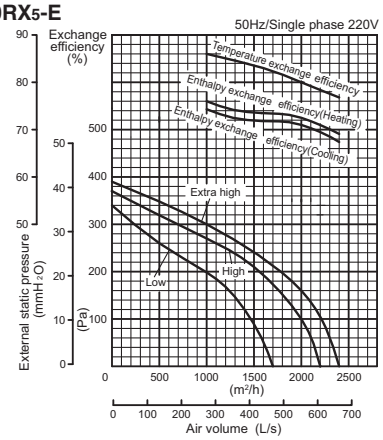

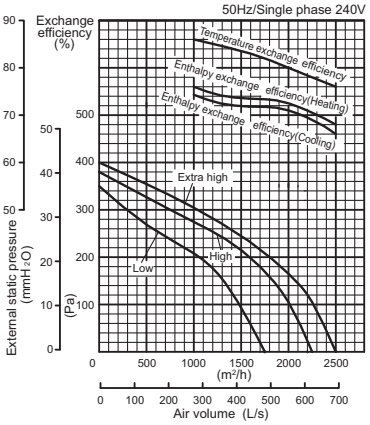

Lossnay

LGH-15RX5-E

Model		LGH-15RX5-E							
Frequency / Power source		50Hz / Single phase 220-240V							
Ventilation mode		LOSSNAY ventilation				By-pass ventilation			
Fan speed		Extra High	High	Low	Extra Low	Extra High	High	Low	Extra Low
Current (A)		0.44-0.46	0.37-0.38	0.25-0.25	0.14-0.15	0.45-0.46	0.37-0.38	0.25-0.26	0.14-0.15
Power consumption (W)		96-110	80-90	53-59	30-35	97-110	81-91	54-61	30-35
Air volume	(m^3/h)	150	150	110	70	150	150	110	70
	(L/s)	42	42	31	19	42	42	31	19
External static pressure	(mmH_2O)	10.2-10.7	6.6-7.1	3.6-4.1	1.4	10.2-10.7	6.6-7.1	3.6-4.1	1.4
	(Pa)	100-105	65-70	35-40	14	100-105	65-70	35-40	14
Temperature exchange efficiency (%)		82.0	82.0	84.0	85.5	—	—	—	—
Enthalpy exchange efficiency (%)	Heating	75.0	75.0	77.5	81.0	—	—	—	—
	Cooling	73.0	73.0	76.5	81.0	—	—	—	—
Noise (dB) (Measured at 1.5m under the center of panel in an anechoeic chamber)		27.5-28	26.5-27	22-23.5	18	28.5-29	27-28	23-24	18-19
Weight (kg)		20							
Starting current		Under 0.8 A Less							

*The Air outlets noise (45° angle, 1.5 meters in front of the unit) is about 6 dB greater than the indicated value. (at High Fan speed)

LGH-25RX5-E

Model		LGH-25RX5-E							
Frequency / Power source		50Hz / Single phase 220-240V							
Ventilation mode		LOSSNAY ventilation				By-pass ventilation			
Fan speed		Extra High	High	Low	Extra Low	Extra High	High	Low	Extra Low
Current (A)		0.52-0.55	0.47-0.48	0.26-0.27	0.17-0.18	0.53-0.55	0.47-0.48	0.26-0.27	0.17-0.18
Power consumption (W)		113-129	102-114	56-62	36-42	115-131	103-115	56-63	36-42
Air volume	(m^3/h)	250	250	155	105	250	250	155	105
	(L/s)	69	69	43	29	69	69	43	29
External static pressure	(mmH_2O)	8.2-8.7	5.1-6.1	2-2.5	0.9	8.2-8.7	5.1-6.1	2-2.5	0.9
	(Pa)	80-85	50-60	20-25	9	80-85	50-60	20-25	9
Temperature exchange efficiency (%)		79.0	79.0	81.5	83.5	—	—	—	—
Enthalpy exchange efficiency (%)	Heating	69.5	69.5	74.0	77.5	—	—	—	—
	Cooling	68.0	68.0	72.5	76.0	—	—	—	—
Noise (dB) (Measured at 1.5m under the center of panel in an anechoeic chamber)		26-27	25-26	20-21.5	18-19	26.5-27.5	25.5-26.5	20.5-22	18-19
Weight (kg)		20							
Starting current		Under 0.9 A Less							

*The Air outlets noise (45° angle,1.5 meters in front of the unit) is about 10 dB greater than the indicated value. (at High Fan speed)

LGH-35RX5-E

Model		LGH-35RX5-E							
Frequency / Power source		50Hz / Single phase 220-240V							
Ventilation mode		LOSSNAY ventilation				By-pass ventilation			
Fan speed		Extra High	High	Low	Extra Low	Extra High	High	Low	Extra Low
Current (A)		0.92-0.92	0.74-0.74	0.5-0.51	0.28-0.3	0.93-0.94	0.77-0.77	0.51-0.52	0.28-0.3
Power consumption (W)		195-212	160-169	105-116	58-69	197-217	164-173	105-116	58-69
Air volume	(m^3/h)	350	350	210	115	350	350	210	115
	(L/s)	97	97	58	32	97	97	58	32
External static pressure	(mmH_2O)	15.8-16.3	7.6-8.2	2.5-3.1	0.9	15.8-16.3	7.6-8.2	2.5-3.1	0.9
	(Pa)	155-160	75-80	25-30	9	155-160	75-80	25-30	9
Temperature exchange efficiency (%)		80.0	80.0	85.0	88.0	—	—	—	—
Enthalpy exchange efficiency (%)	Heating	71.5	71.5	76.5	81.5	—	—	—	—
	Cooling	71.0	71.0	75.5	81.0	—	—	—	—
Noise (dB) (Measured at 1.5m under the center of panel in an anechoeic chamber)		32-32	28.5-29.5	21.5-23	18	32.5-32.5	29.5-30.5	21.5-24	18
Weight (kg)		29							
Starting current		Under 2.4 A Less							

*The Air outlets noise (45° angle, 1.5 meters in front of the unit) is about 10 dB greater than the indicated value. (at High Fan speed)

LGH-50RX5-E

Model		LGH-50RX5-E							
Frequency / Power source		50Hz / Single phase 220-240V							
Ventilation mode		LOSSNAY ventilation				By-pass ventilation			
Fan speed		Extra High	High	Low	Extra Low	Extra High	High	Low	Extra Low
Current (A)		1.2-1.25	1.0-1.0	0.85-0.85	0.4-0.4	1.25-1.25	1.0-1.0	0.85-0.85	0.4-0.4
Power consumption (W)		255-286	207-228	175-190	80-95	260-290	210-230	180-195	80-95
Air volume	(m^3/h)	500	500	390	180	500	500	390	180
	(L/s)	139	139	108	50	139	139	108	50
External static pressure	(mmH_2O)	15.3-15.8	6.6-9.2	4.1-6.1	1.0	15.3-15.8	6.6-9.2	4.1-6.1	1.0
	(Pa)	150-155	65-90	40-60	10	150-155	65-90	40-60	10
Temperature exchange efficiency (%)		78.0	78.0	81.0	86.0	—	—	—	—
Enthalpy exchange efficiency (%)	Heating	69.0	69.0	71.0	78.0	—	—	—	—
	Cooling	66.5	66.5	68.0	77.0	—	—	—	—
Noise (dB) (Measured at 1.5m under the center of panel in an anechoeic chamber)		33-34	30.5-32	26.5-28	19	34-35	31-32.5	27-29	19
Weight (kg)		32							
Starting current		Under 3.0 A Less							

*The Air outlets noise (45° angle, 1.5 meters in front of the unit) is about 16 dB greater than the indicated value. (at High Fan speed)

LGH-65RX5-E

Model		LGH-65RX5-E							
Frequency / Power source		50Hz / Single phase 220-240V							
Ventilation mode		LOSSNAY ventilation				By-pass ventilation			
Fan speed		Extra High	High	Low	Extra Low	Extra High	High	Low	Extra Low
Current (A)		1.7-1.8	1.5-1.5	1.2-1.2	0.6-0.6	1.7-1.8	1.5-1.5	1.2-1.2	0.6-0.6
Power consumption (W)		350-380	308-322	248-265	120-140	350-385	310-335	250-265	120-140
Air volume	(m^3/h)	650	650	520	265	650	650	520	265
	(L/s)	181	181	144	74	181	181	144	74
External static pressure	(mmH_2O)	11.2-12.2	6.1-8.2	4.1-5.1	0.8	11.2-12.2	6.1-8.2	4.1-5.1	0.8
	(Pa)	110-120	60-80	40-50	8	110-120	60-80	40-50	8
Temperature exchange efficiency (%)		77.0	77.0	80.0	86.0	—	—	—	—
Enthalpy exchange efficiency (%)	Heating	68.5	68.5	70.5	78.0	—	—	—	—
	Cooling	66.0	66.0	68.5	77.0	—	—	—	—
Noise (dB) (Measured at 1.5m under the center of panel in an anechoeic chamber)		34-34.5	32-33	28.5-31.5	22	34.5-35	32.5-33.5	28.5-30.5	22-22.5
Weight (kg)		40							
Starting current		Under 4.4 A Less							

*The Air outlets noise (45° angle, 1.5 meters in front of the unit) is about 10 dB greater than the indicated value. (at High Fan speed)

LGH-80RX5-E

Model		LGH-80RX5-E							
Frequency / Power source		50Hz / Single phase 220-240V							
Ventilation mode		LOSSNAY ventilation				By-pass ventilation			
Fan speed		Extra High	High	Low	Extra Low	Extra High	High	Low	Extra Low
Current (A)		1.75-1.75	1.6-1.6	1.45-1.45	0.60-0.65	1.75-1.75	1.6-1.6	1.45-1.45	0.60-0.65
Power consumption (W)		380-415	345-370	315-340	125-145	380-415	345-370	315-340	120-145
Air volume	(m^3/h)	800	800	700	355	800	800	700	355
	(L/s)	222	222	194	99	222	222	194	99
External static pressure	(mmH_2O)	14.8-15.3	10.7-12.2	8.2-9.7	2	14.8-15.3	10.7-12.2	8.2-9.7	2
	(Pa)	145-150	105-120	80-95	20	145-150	105-120	80-95	20
Temperature exchange efficiency (%)		79.0	79.0	80.5	87.5	—	—	—	—
Enthalpy exchange efficiency (%)	Heating	71.0	71.0	72.5	79.5	—	—	—	—
	Cooling	70.0	70.0	71.5	79.5	—	—	—	—
Noise (dB) (Measured at 1.5m under the center of panel in an anechoeic chamber)		33.5-34.5	32-33	30-31	22	34.5-35.5	33-34	31-32	22
Weight (kg)		53							
Starting current		Under 3.8 A Less							

*The Air outlets noise (45° angle, 1.5 meters in front of the unit) is about 16 dB greater than the indicated value. (at High Fan speed)

LGH-100RX5-E

Model		LGH-100RX5-E							
Frequency / Power source		50Hz / Single phase 220-240V							
Ventilation mode		LOSSNAY ventilation				By-pass ventilation			
Fan speed		Extra High	High	Low	Extra Low	Extra High	High	Low	Extra Low
Current (A)		2.3-2.4	2.1-2.1	1.7-1.7	0.9-0.9	2.3-2.4	2.1-2.1	1.7-1.7	0.9-0.9
Power consumption (W)		500-535	445-475	350-380	175-200	510-550	460-485	365-395	175-200
Air volume	(m^3/h)	1000	1000	755	415	1000	1000	755	415
	(L/s)	278	278	210	115	278	278	210	115
External static pressure	(mmH_2O)	16.3-17.3	10.2-11.2	5.6-6.1	1.8	16.3-17.3	10.2-11.2	5.6-6.1	1.8
	(Pa)	160-170	100-110	55-60	18	160-170	100-110	55-60	18
Temperature exchange efficiency (%)		80.0	80.0	83.0	87.0	—	—	—	—
Enthalpy exchange efficiency (%)	Heating	72.5	72.5	74.0	80.0	—	—	—	—
	Cooling	71.0	71.0	73.0	79.0	—	—	—	—
Noise (dB) (Measured at 1.5m under the center of panel in an anechoeic chamber)		36-37	34-35	31-32.5	21-22	37-38	35-36	32-33	21-22
Weight (kg)		59							
Starting current		Under 4.6 A Less							

*The Air outlets noise (45° angle, 1.5 meters in front of the unit) is about 17 dB greater than the indicated value. (at High Fan speed)

LGH-150RX5-E

Model		LGH-150RX5-E					
Frequency / Power source		50Hz / Single phase 220-240V					
Ventilation mode		LOSSNAY ventilation			By-pass ventilation		
Fan speed		Extra High	High	Low	Extra High	High	Low
Current (A)		3.5-3.5	3.2-3.2	2.9-2.9	3.5-3.5	3.2-3.2	2.9-2.9
Power consumption (W)		760-830	690-740	630-680	765-835	695-745	635-685
Air volume	(m^3/h)	1500	1500	1300	1500	1500	1300
	(L/s)	417	417	361	417	417	361
External static pressure	(mmH_2O)	16.3-17.8	13.3-13.8	9.7-10.2	16.3-17.8	13.3-13.8	9.7-10.2
	(Pa)	160-175	130-135	95-100	160-175	130-135	95-100
Temperature exchange efficiency (%)		80.0	80.0	81.0	—	—	—
Enthalpy exchange efficiency (%)	Heating	72.0	72.0	72.5	—	—	—
	Cooling	70.5	70.5	71.5	—	—	—
Noise (dB) (Measured at 1.5m under the center of panel in an anechoeic chamber)		38-39	36-37.5	33.5-35	39-40.5	37.5-39	35.5-37
Weight (kg)		105					
Starting current		Under 7.3 A Less					

*The Air outlets noise (45° angle, 1.5 meters in front of the unit) is about 19 dB greater than the indicated value. (at High Fan speed)

LGH-200RX5-E

Model		LGH-200RX5-E					
Frequency / Power source		50Hz / Single phase 220-240V					
Ventilation mode		LOSSNAY ventilation			By-pass ventilation		
Fan speed		Extra High	High	Low	Extra High	High	Low
Current (A)		4.8-4.8	4.2-4.2	3.4-3.4	4.8-4.8	4.2-4.2	3.4-3.4
Power consumption (W)		1035-1100	910-980	715-785	1040-1110	915-980	720-785
Air volume	(m^3/h)	2000	2000	1580	2000	2000	1580
	(L/s)	556	556	439	556	556	439
External static pressure	(mmH_2O)	16.3-16.8	10.2-10.7	6.1-6.6	16.3-16.8	10.2-10.7	6.1-6.6
	(Pa)	160-165	100-105	60-65	160-165	100-105	60-65
Temperature exchange efficiency (%)		80.0	80.0	83.0	—	—	—
Enthalpy exchange efficiency (%)	Heating	72.5	72.5	73.5	—	—	—
	Cooling	71.0	71.0	72.0	—	—	—
Noise (dB) (Measured at 1.5m under the center of panel in an anechoeic chamber)		39.5-40	37-38	32.5-34	40.5-41	38-39	33.5-35
Weight (kg)		118					
Starting current		Under 11.9A Less					

*The Air outlets noise (45° angle, 1.5 meters in front of the unit) is about 20 dB greater than the indicated value. (at High Fan speed)

4. SAMPLE INSTALLATIONS

LGH-15RX5-E to 100RX5

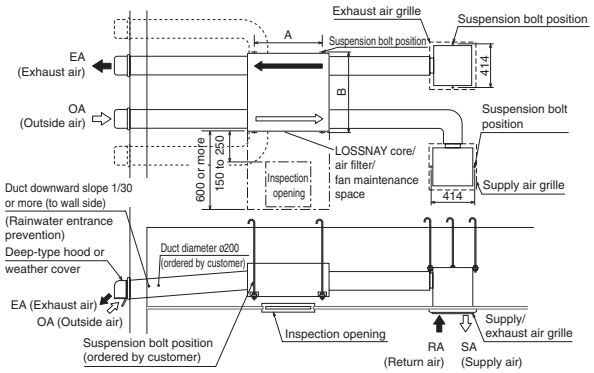

·Always leave inspection holes (□450 or □600) on the air filter and LOSSNAY core removal side.
· Always insulate the two ducts outside the room (intake air and exhaust air ducts) to prevent condensation.
·It is possible to change the direction of the outside air ducts (OA and EA side).
· Do not install the vent cap or round hood where it will come into direct contact with rain water.

Unit: mm

Model	A	B
LGH-15RX5	768	782
LGH-25RX5	768	782
LGH-35RX5	875	921
LGH-50RX5	875	1063
LGH-65RX5	895	1001
LGH-80RX5	1010	1036
LGH-100RX5	1010	1263

LGH-150RX5 and 200RX5

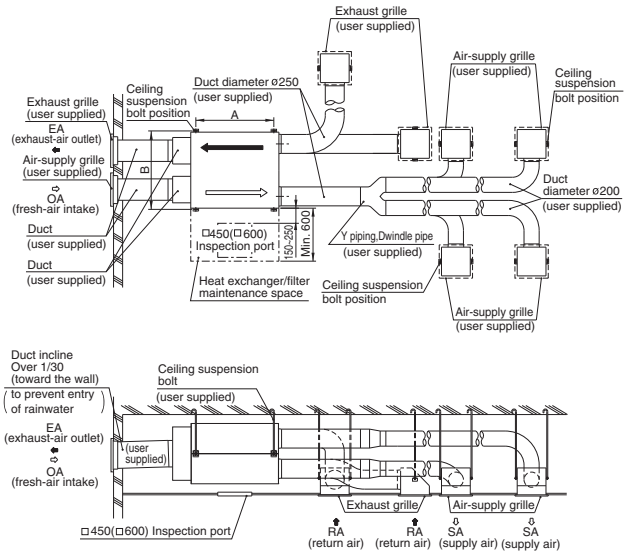

·Always leave inspection holes (□450 or □600) on the air filter and LOSSNAY core removal side.
· Always insulate the two ducts outside the room (intake air and exhaust air ducts) to prevent condensation.
·If necessary, order a weather cover to prevent rain water from direct contact or entering the unit.

Unit: mm

Model	A	B
LGH-150RX5	1010	1045
LGH-200RX5	1010	1272

Attention for specifications

1.Cold operation mode(*1) is to start repeating in the case that LOSSNAY's detected OA temperature is less than-10°C.
*1.Supply air(SA) in the operation for 60min. followed by stop operation for 10min.
2.The current, power consumption and efficiency are based on the air flow rate in the specification.
3.Fan speed is selectable by the remote controller from High (Extra-High), Low, Extra-Low(Extra-Low not equipped LGH-150RX5 and 200RX5).
Multi Ventilation Mode should set on LOSSNAY unit or remote controller (PZ-60DR-E).
4.LOSSNAY ventilation mode is to start automatically in the case that LOSSNAY's detected OA temperature is less than +8°C,even if By-pass ventilation is set by remote controller.
Remote controller continue to show "By-pass ventilation" in this case.
5.Temperature Exchange efficiency(%) are based on winter condition.
6.Mitsubishi Electric measures the machine according to the Japan Industrial Standards(JIS B 8628)

Attention

1.When using the product where it is exposed to high temperatures and humidity (40°C or higher, RH 80% or higher), or where fog occurs frequently, moisture is likely to condense in the core, and may result in condensation build up in the unit.The product should not be used under such conditions.
2.Outdoor air may enter the LOSSNAY owing to the pressure difference between indoor and outdoor or external winds even when the product is not operated. It is recommended to install an Electrically operated damper to block the outdoor air.
3.In a cold weather area, an area with strong external winds or where fog occurs frequently, cold outdoor air, external winds or fog may be introduced into the product when its operation is stopped.
It is recommended to install an Electrically operated damper.
4.In a cold weather area, or others, dewing or freezing could occur on the main unit, where the duct is connected, or other sections, depending on the conditions of outdoor air and indoor temperature and moisture, even if they are within the range of operating conditions. Make sure to confirm the operating conditions and other precautions, and do not use the product if dewing or freezing is anticipated.
5.The outside ducts must be tilted at a gradient (1/30 or more) down toward the outdoor louvres from LOSSNAY, and properly insulated. (The entry of rain water may cause power leakage, fire, or damege to household property)
6.The two outdoor ducts must be covered with heat-insulating material in order to prevent condensation from forming.
If it is expected that the ambient temperature around the place where the LOSSNAY unit is installed will be high during the summer air conditioning season, it is recommended that the indoor ductwork be covered with insulation material.
7.Inspection opening (450 × 450 or 600 × 600mm)must be installed on the filter and LOSSNAY

LGH-15RX5 to 100RX5

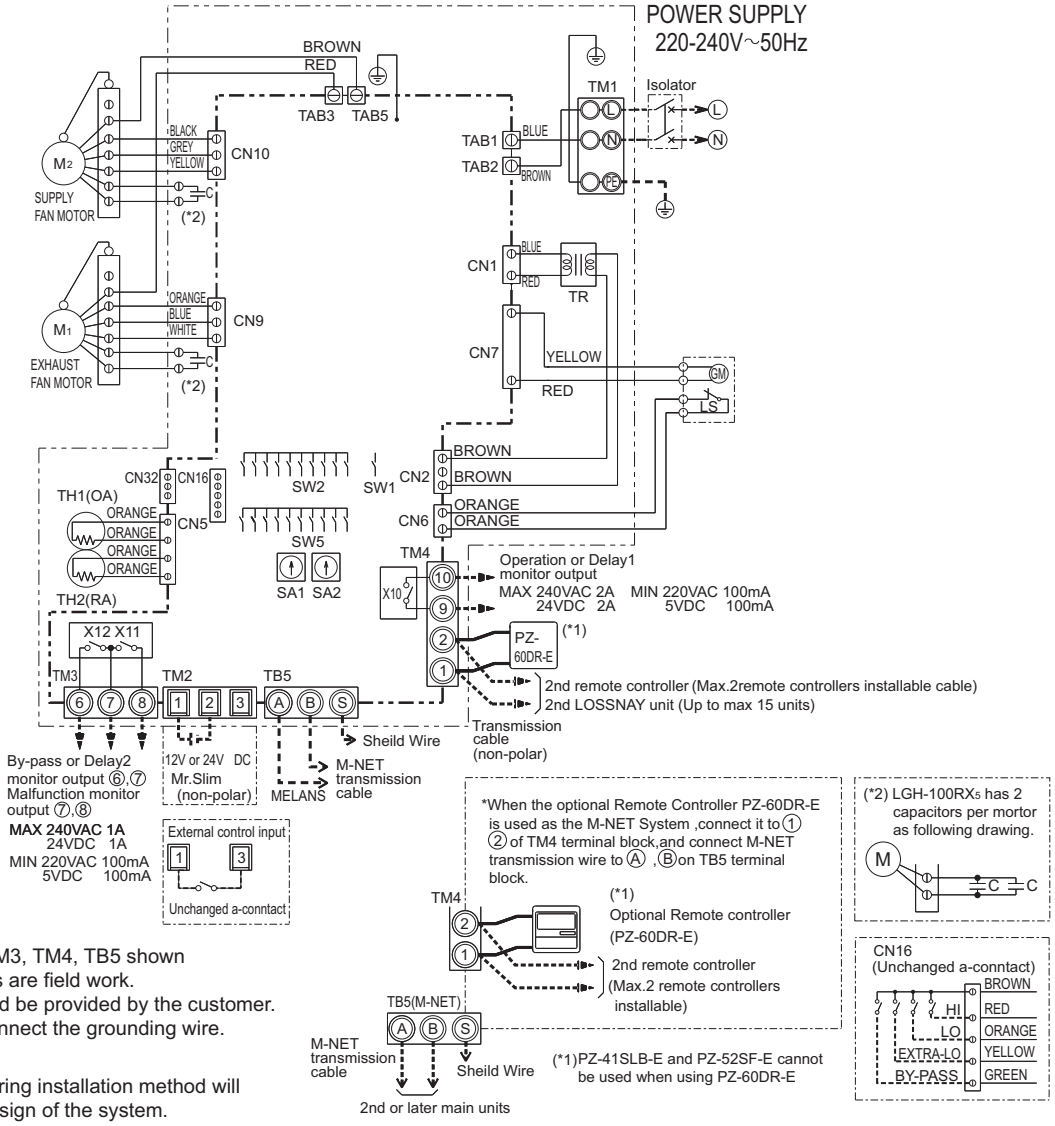

■NOTE 1.TM1, TM2, TM3, TM4, TB5 shown in dotted lines are field work.
2.Isolator should be provided by the customer.
3.Be sure to connect the grounding wire.

*Attention

With this product, the wiring installation method will vary according to the design of the system.
Perform electrical installation to meet local electrical regulations.
·Always use double insulated PVC cable for the transmission cables.
·Wiring work must be performed by qualified professionals.
·All supply circuits must be disconnected before obtaining access to the terminal devices.

*Specifications may be subject to change without notice.

Definition of Symbols			
M1:	Motor for exhaust fan	CN1:	Connector (Transformer primary)
M2:	Motor for supply fan	CN2:	Connector (Transformer secondary)
C:	Capacitor	CN5:	Connector (Thermistor)
GM:	Motor for By-pass operation	CN6:	Connector (Microswitch)
LS:	Microswitch	CN7:	Connector (Motor for By-pass operation)
TH1:	Thermistor for outside air	TAB3:	Tab connector(Fan motor)
TH2:	Thermistor for return air	TAB5:	Tab connector (Fan motor)
SW1:	Switch (Main/Sub change)	CN9:	Connector (Fan motor)
SW2, 5:	Switch (Function selection)	CN10:	Connector (Fan motor)
TM1:	Terminal block (Power supply)	CN16:	Connector (High/Low/By-pass switch)
TM2:	Terminal block (External control input)	CN32:	Connector (Remote control selection)
TM3:	Terminal block (Monitor output)	SA1:	Address setting rotary switch (10 digit)
TM4 :	Terminal block (Transmission cable and monitor output)	SA2:	Address setting rotary switch (1 digit)
TB5 :	Terminal block (M-NET Transmission cable)	SYMBOL	○□ : Indicates terminal block.
TAB1,TAB2:	Connector(Power supply)		⦶ : Connector.
TR1:	Control circuit transformer		⦶ : Board insertion connector or fastening connector of control board.
X10,X11,X12:	Relay contact		

Lossnay

LGH-150RX5 and 200RX5

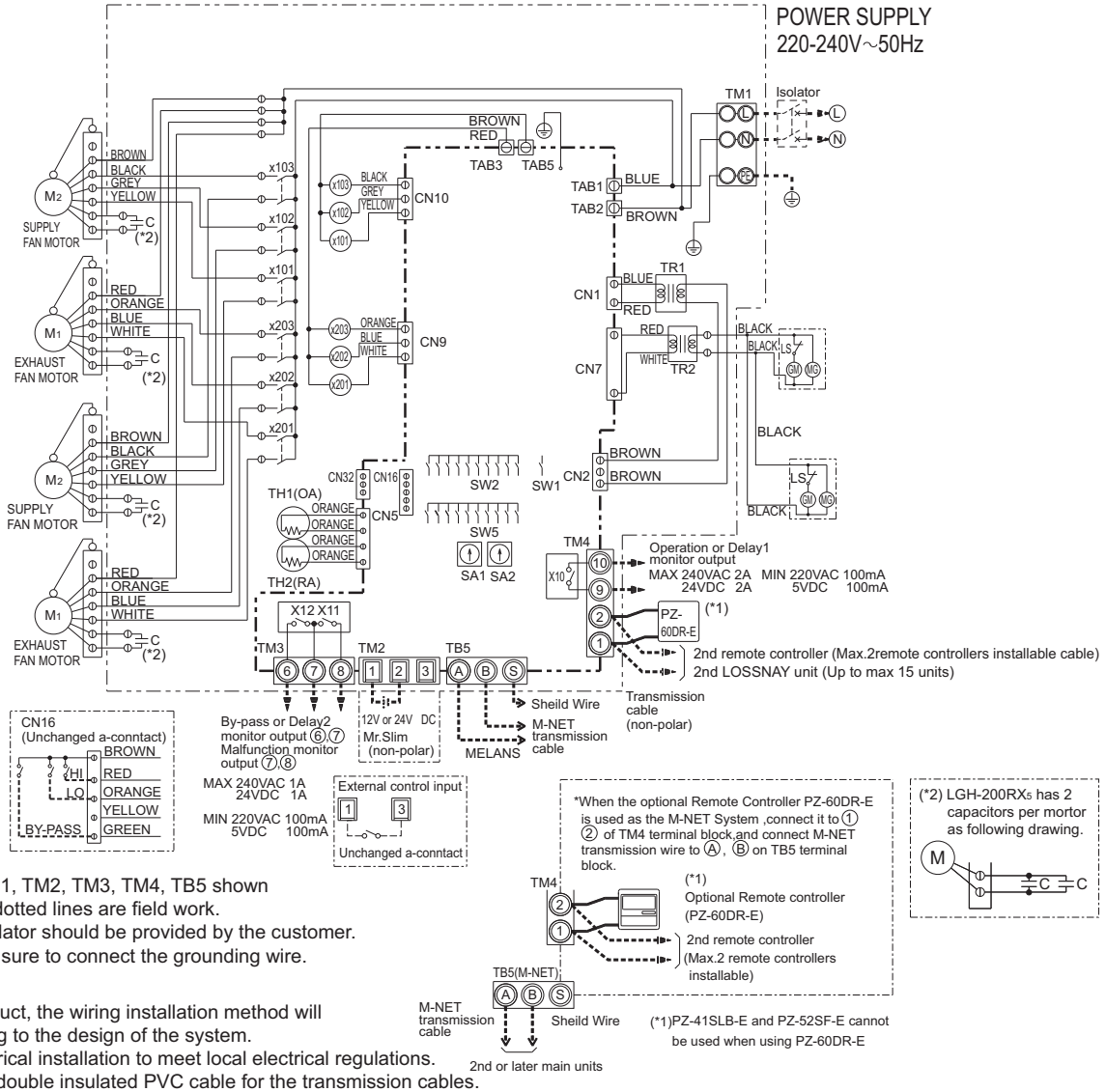

■NOTE 1.TM1, TM2, TM3, TM4, TB5 shown in dotted lines are field work.
2.Isolator should be provided by the customer.
3.Be sure to connect the grounding wire.

*Attention

With this product, the wiring installation method will vary according to the design of the system.
Perform electrical installation to meet local electrical regulations.
·Always use double insulated PVC cable for the transmission cables.
·Wiring work must be performed by qualified professionals.
·All supply circuits must be disconnected before obtaining access to the terminal devices.

*Specifications may be subject to change without notice.

Definition of Symbols			
M1:	Motor for exhaust fan	X10,X11,X12:	Relay contact
M2:	Motor for supply fan	X101,X102,X103:	Relay Supply fan speed control
C:	Capacitor	X201,X202,X203:	Relay Exhaust fan speed control
GM:	Motor for By-pass operation	CN1:	Connector (Transformer primary)
LS:	Microswitch	CN2:	Connector (Transformer secondary)
TH1:	Thermistor for outside air	CN5:	Connector (Thermistor)
TH2:	Thermistor for return air	CN6:	Connector(Microswitch)
SW1:	Switch (Main/Sub change)	CN7:	Connector (Motor for By-pass operation)
SW2, 5:	Switch (Function selection)	CN9:	Connector (Fan motor)
TM1:	Terminal block (Power supply)	TAB3:	Tab connector (Fan motor)
TM2:	Terminal block(External control input)	TAB5:	Tab connector (Fan motor)
TM3:	Terminal block (Monitor output)	CN9:	Connector (Fan motor)
TM4:	Terminal block (Transmission cable and monitor output)	CN10:	Connector (Fan motor)
		CN16:	Connector(High/Low/By-pass switch)
TB5:	Terminal block (M-NET Transmission cable)	CN32:	Connector (Remote control selection)
TAB1,TAB2:	Connector(Power supply)	SA1:	Address setting rotary switch (10 digit)
TR1:	Control circuit transformer	SA2:	Address setting rotary switch (1 digit)
TR2,TR3:	By-pass operation transformer	SYMBOL	◯ □ : Indicates terminal block. ① Board insertion connector or fastening Ⓓ connector of control board.

Lossnay