evapco®

LSTE/LPT

FORCED DRAFT COOLING TOWERS



CTI CERTIFIED †

DELIVERING QUALITY, FOCUSED ON PERFECTION

IBC COMPLIANT DESIGNS

† Mark owned by the Cooling Technology Institute



Since its founding in 1976, EVAPCO, Incorporated has become an industry leader in the engineering and manufacturing of quality heat transfer products around the world. EVAPCO's mission is to provide first class service and quality products for the following markets:

- Industrial Refrigeration
- Commercial HVAC
- Industrial Process
- Power

EVAPCO's powerful combination of financial strength and technical expertise has established the company as a recognized manufacturer of market-leading products on a worldwide basis. EVAPCO is also recognized for the superior technology of their environmentally friendly product innovations in sound reduction and water management.

EVAPCO is an employee owned company with a strong emphasis on research & development and modern manufacturing plants. EVAPCO has earned a reputation for technological innovation and superior product quality by featuring products that are designed to offer these operating advantages:

- Higher System Efficiency
- Environmentally Friendly
- Lower Annual Operating Costs
- Reliable, Simple Operation and Maintenance

With an ongoing commitment to Research & Development programs, EVAPCO provides the most advanced products in the industry– ***Technology for the Future, Available Today***!





EVAPCO products are manufactured in 17 locations in 8 countries around the world and supplied through a sales network consisting of over 170 offices.

©2012 EVAPCO, Inc.

LSTE/LPT

The new & improved EVAPCO Model LSTE and LPT forced draft centrifugal cooling towers feature IBC Compliance in addition to CTI Certification. These features reinforce EVAPCO's position as the leading manufacturer of forced draft evaporative cooling equipment. All features shown are available on all models.

Easy Field Assembly

- Ensures easy assembly and fewer fasteners.
- Incorporates self-guiding channels to guide the casing section into position improving the quality of the field seam.





Stainless Steel Strainer

- Resists corrosion better than other materials.



Clean Pan Design

- Sloped design allows water to drain completely from cold water basin.
- Easier removal of dirt and debris.

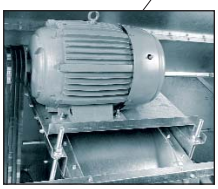

Totally Enclosed Fan Motors & Superior Drive System

- Assures long life.
- Located in dry, incoming air-stream, allowing normal maintenance to be done from the outside of the unit.
- If required, motor can be easily removed.
- Motors are now located outboard on multi-motor units for even easier drive system access.
- 5 year motor and drive warranty is standard
- Premium efficient, inverter-ready motors standard



Design and Construction Features

Drift Eliminators Located in Casing

- Eliminators now integrated within casing section for easy mounting of ductwork, discharge hood, and attenuation.

Exclusive EVAPAK® fill

- Provides the most efficient thermal performance per plan area.
- Suitable for use as a working platform.

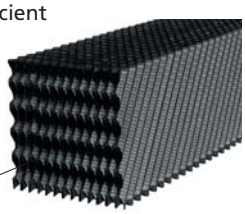

PVC Spray Distribution Header

- Nozzles are threaded into the header to ensure proper orientation.
- Fixed position nozzles require little maintenance.
- Large orifice nozzle with integral sludge ring to prevent clogging.
- Threaded end-caps on distribution piping for ease of cleaning.

High Efficiency Drift Eliminators

- Advanced design limits maximum drift rate to 0.001% of the recirculated water rate.
- Corrosion resistant PVC for long life.

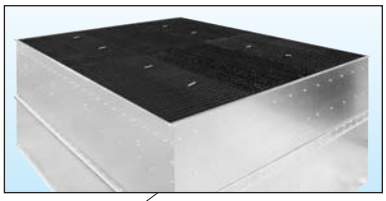

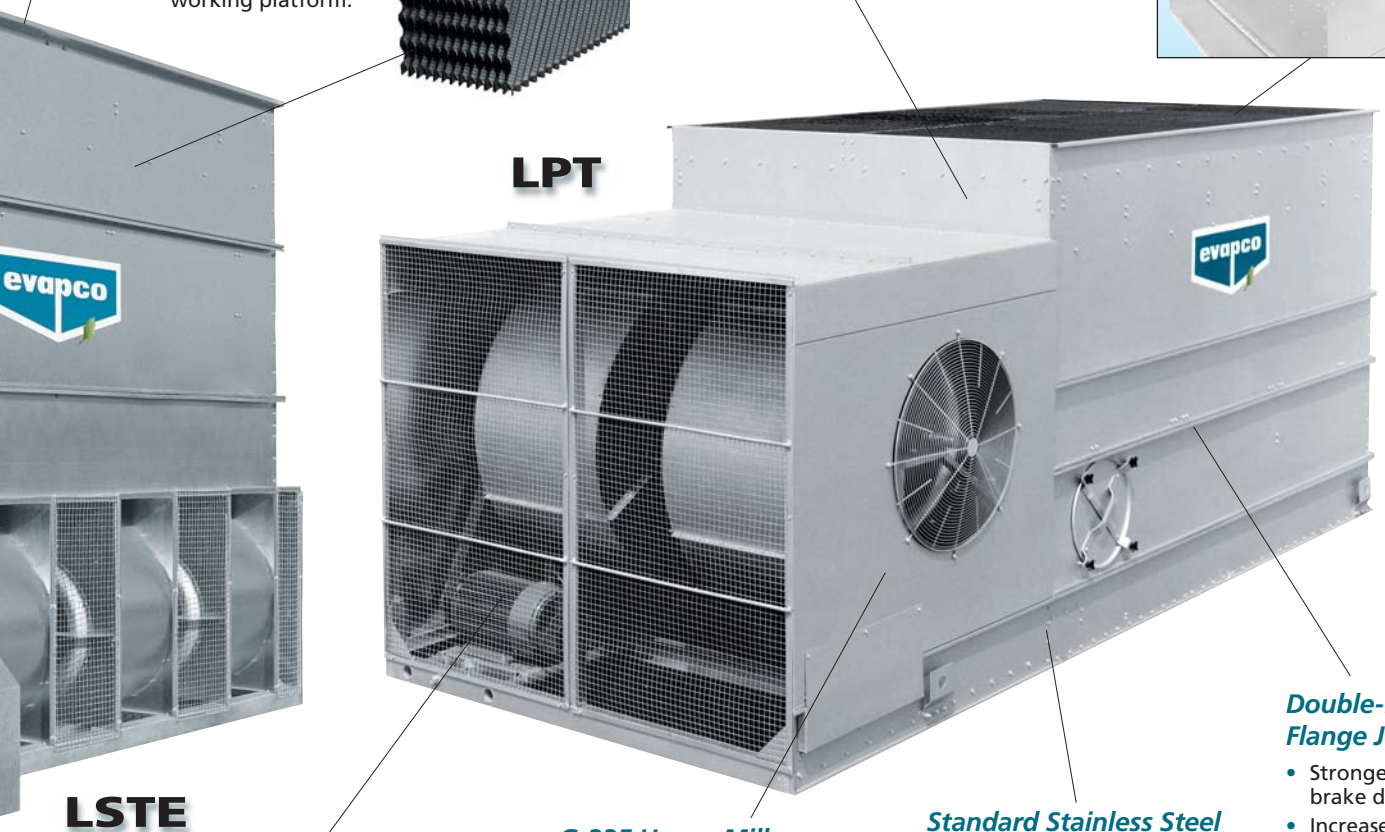

CTI CERTIFIED †

CTI Certified

Double-Brake Flange Joints

- Stronger than single-brake designs by others.
- Increases field rigging joint integrity.
- Greater structural integrity.

Standard Stainless Steel Cold Water Basin

- Eliminates the need for unreliable epoxy coatings.

G-235 Heavy Mill Galvanized Steel Construction

(Stainless steel available as an affordable option)



Easy to Service Motor & Drive System

- Belt tensioning and bearing lubrication can be performed from outside the unit.
- Locking mechanism can also be used as a wrench to adjust the belt tension (LPT only).
- Motor is fully accessible by removing one inlet screen.
- Split fan housings allow removal of all mechanical equipment through the end of the unit (LPT only).

IBC Compliant Construction

- LSTE and LPT are designed to withstand 1.0 g seismic load and 145 psf wind load.
- Upgraded unit construction built to withstand 5.12 g seismic load and 145 psf wind load.

IBC COMPLIANT DESIGNS

† Mark owned by the Cooling Technology Institute

LSTE/LPT

IBC COMPLIANCE

In its continuing commitment to be the leaders in evaporative cooling equipment design and services, EVAPCO LSTE and LPT Cooling Towers are now ***Independently Certified*** to withstand Seismic and Wind Loads in ***ALL Geographic Locations and Installations*** in accordance with IBC 2009.

What is IBC?

International Building Code

The International Building Code (IBC) is a comprehensive set of regulations addressing both the structural design and the installation requirements for building systems – including HVAC and industrial refrigeration equipment. The IBC is intended to replace BOCA's The National Building Code, ICBO's Uniform Building Code and SBCCI's Standard Building Code.

Compared to previous building codes that considered only the building structure and component anchorage, the requirements contained within the IBC address anchorage, structural integrity, and the operational capability of a component following either a seismic or wind load event. **Simply stated, the IBC code provisions require that evaporative cooling equipment, and all other components permanently installed on a structure, must be designed to meet the same seismic or wind load forces as the building to which they are attached.**

How Does IBC 2009 Apply to Cooling Towers?

Based on the project zip code and site design factors, calculations are made to determine the equivalent seismic "g force" and wind load (in pounds per square foot – psf) on the unit. The cooling tower must be designed to withstand the greater of either the seismic or wind load.

The New LSTE and LPT are offered with a choice of TWO structural design packages:

- **Standard Structural Design** – For projects with ≤ 1.0g seismic or 145 psf wind loads
- **Upgraded Structural Design** – Required for projects with >1.0 g seismic or 145 psf wind loads

All locations with design criteria resulting in a seismic design force of up to 1.0g or a wind load of 145 psf or below will be provided with the standard LSTE and LPT structural design. An upgraded structural design is available for installations with design criteria resulting in "g forces" greater than 1.0g. The highest "g force" location in North America is 5.12g. The highest wind load shown on the maps is 170 mph, which is approximately equal to 145 psf velocity pressure. **Therefore, the upgraded structural design package option for the New LSTE and LPT are designed for 5.12 g and 145 psf making it applicable to ALL building locations in North America.**

Seismic Design

The chart shown below, from the US Geological Survey Website http://www.usgs.gov/ shows the potential seismic activity in the United States. Buildings constructed in the red, orange and yellow areas of the map are most likely to require the upgraded LSTE and LPT construction design based on the site seismic design factors. Critical use facilities, such as hospitals, are also more likely to require the upgraded design.

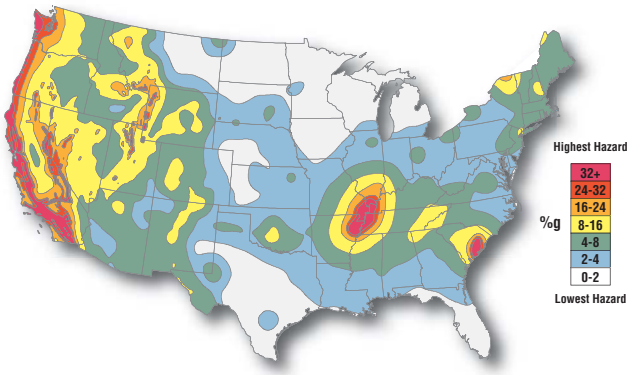

Map courtesy US Geological Survey website

The project architect or civil engineer is responsible for determining the seismic design factors to be used for the building design. A mechanical consulting engineer and/or design build contractor will then apply these factors to a series of charts and graphs to determine the appropriate seismic design factors based on the location of the installation and ultimately the "importance" of the facility.

IBC COMPLIANCE

Wind Design

The IBC 2009 code book includes a map of basic wind speed (3-second gust) by contour lines. However, local regulations may be more stringent than these published speeds.

Whichever design force - seismic or wind - is more severe for the building, governs the design of the building and all attached equipment.

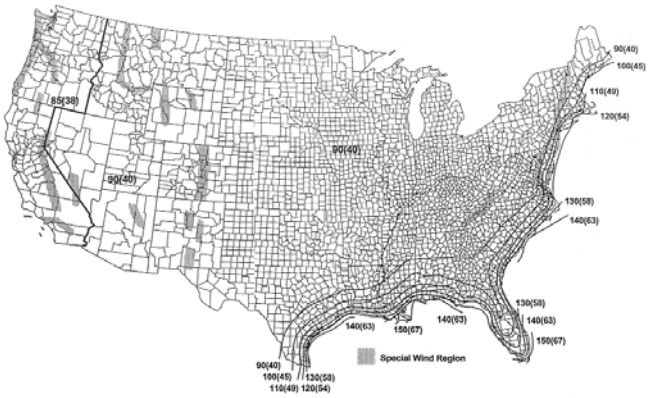

Wind Load Map Courtesy IBC 2009 Text - See full sized map for location specific values

Design Implementation

EVAPCO applies the seismic design and wind load information provided for the project to determine the equipment design necessary to meet IBC requirements. This process ensures that the mechanical equipment and its components are compliant per the provisions of the IBC as given in the plans and specifications for the project.

Independent Certification

Although the IBC references and is based on the structural building code ASCE 7, many chapters and paragraphs of ASCE 7 are superceded by the IBC, independent certification and methods of analysis are such paragraphs. Per the most recent edition of the code, the EVAPCO compliance process included an exhaustive analysis by an independent approval agency. As required by the International Building Code, EVAPCO supplies a certificate of compliance as part of its submittal documents. The certificate of compliance demonstrates that the equipment has been independently tested and analyzed in accordance with the IBC seismic and wind load requirements. Evapco has worked closely with an independent approval agency to complete the equipment testing and analysis.


evapco

Certificate of Compliance

LSTE, LPT, PMTQ Cooling Towers
PMWQ, LSWE, LRWB Closed Circuit Coolers
PMC-E, LSC-E and LRC Evaporative Condensers

Are certified to meet or exceed the Seismic and Wind Load Provisions set forth in the applicable building codes for this project.

These products have been manufactured following all applicable quality assurance programs.

Applicable Building Codes:
IBC 2006
ASCE-7
NFPA 5000

Referenced Report:
VMA-43387

Approval Agency:
VMC Seismic Consulting Group

EVAPCO...Specialists in Heat Transfer Products and Services.

If the seismic "g force" or wind load psf requirements for the project site are known, EVAPCO's online equipment selection software, evap*Select*, will allow you to choose the required structural design package – either standard construction or upgraded construction.

If the project requirements are unknown, the following calculations must be completed.

For further questions regarding IBC compliance, please contact your local EVAPCO Representative or visit www.evapco.com.

When using the EVAPCO selection software to make a selection, these calculations are already incorporated into the selection process. Simply enter the required factors and the Seismic Design Force and Wind Load will be calculated automatically!

LSTE/LPT

DESIGN FEATURES

Principle of Operation

Warm water from the heat source is pumped to the water distribution system at the top of the tower. The water is then distributed over the wet deck fill by means of large orifice nozzles. Simultaneously, air is forced-up through the fill section via centrifugal fans. A small portion of the water is evaporated, which removes the heat from the remaining water. The warm moist air is forced to the top of the cooling tower and discharged to the atmosphere. The cooled water then drains to the basin at the bottom of the tower where it is returned to the heat source.

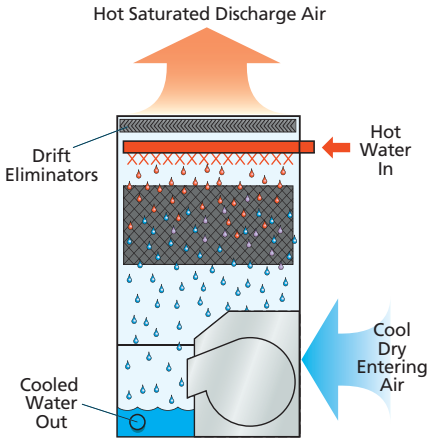

EVAPAK® Cooling Tower Fill

The patented* EVAPAK® fill design used in the forced draft cooling tower line is the culmination of thousands of hours of research and testing conducted by EVAPCO's research engineers. This program has produced a cooling tower fill with superior heat transfer, reduced channeling in flow passages, improved drip enhancement for lower air side pressure drop and exceptional structural strength.

The fill is specially designed to induce highly turbulent mixing of the air and water for heat transfer. This is made possible by forming the raw fill into corrugated panels on which there are small ridges. These ridges serve many purposes, one of which is to create agitation in both the water and the air in the tower. This increase in turbulence prevents channeling of the water and promotes better mixing of air and water, therefore improving heat transfer. In addition, special drainage tips allow high water loadings without excessive pressure drop.

The fill is constructed of inert polyvinyl chloride, (PVC). It will not rot or decay and is formulated to withstand water temperatures of 130°F (55°C). The fill also has excellent fire resistant qualities providing a flame spread rating of 5 per ASTM-E84-81a. (The flame spread rating scale ranges from 0 for non-combustible to 100 for highly combustible). Because of the unique way in which the crossfluted sheets are bonded together, the structural integrity of the fill is greatly enhanced, making the fill usable as a working platform.

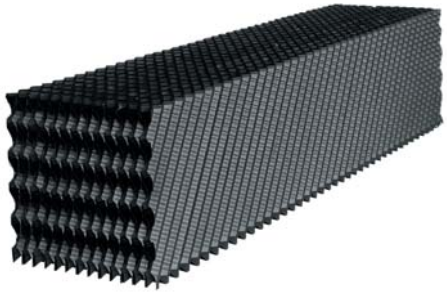

EVAPAK® FILL

A high temperature fill is available for water temperatures **exceeding 130°F**. Consult your EVAPCO representative for further details.

Patented High Efficiency Drift Eliminators

An extremely efficient drift eliminator system is standard on the LSTE and LPT Cooling Tower. The system removes entrained water droplets from the air stream to limit the drift rate to less than 0.001% of the recirculating water rate. The LSTE and LPT can be located in areas where minimum water carryover is critical, such as parking lots.

The drift eliminators are constructed of an inert polyvinyl chloride (PVC) plastic material which effectively eliminates corrosion of these vital components. They are assembled in sections to facilitate easy removal for inspection of the water distribution system.

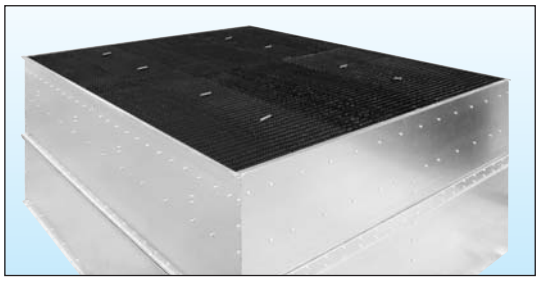

ELIMINATOR

U.S. Patent No. 6,315,804

DESIGN FEATURES

LSTE/LPT

Fan Motor Mount

TEFC fan motors are mounted in a convienent open area for ease of belt tensioning, motor lubrication and electrical connection. The motor base is designed for easy adjustment and to be locked into position to maintain proper belt tension.

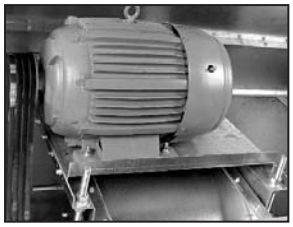

Example LSTE Fan Motor Mount

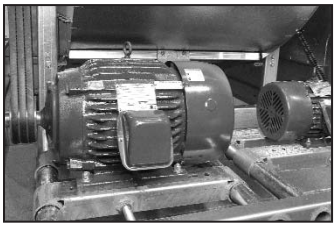

LPT Fan Motor Mount
(shown with optional pony motor)

Fan Access-Split Housing



Another unique feature of the LPT Cooling Towers is the split fan housing. The split fan housing on the LPT allows quick removal of the fans from the front end of the unit. This feature allows fan removal when units are placed side by side where space is minimal.

Mechanical Drive System Access

The LSTE and LPT mechanical drive systems are easy to maintain. Bearing lubrication and belt adjustment can be performed from outside the unit. There is no need to remove fan screens to maintain important drive components. In addition, the locking mechanism used to maintain belt tension can also work as a wrench to adjust the belt.

Centrifugal Fan Assembly

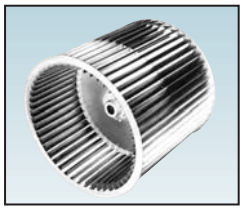

Fans on LSTE and LPT Cooling Towers are of the forward curved centrifugal design with hot-dip galvanized steel construction. All fans are statically and dynamically balanced and are mounted in a hot-dip galvanized steel housing.

Capacity Control

All LSTE and LPT models come standard with premium efficient, inverter-ready fan motors that can be used with variable frequency drive (VFD) systems for precise capacity control. VFD systems can control the speed of a fan motor by modulating the voltage and frequency of the motor input electrical signal. When connected to a building automation system a VFD can receive signals varying fan speeds to meet demand loads. This popular method of capacity control can yield significant energy savings.

Evapco offers two-speed fan motors as an option for alternative capacity control. In periods of lightened loads or reduced wet bulb temperatures the fans can operate at low speed providing about 60% of full speed capacity yet consuming only about 15% of full speed power. These motors do not require the use of VFD systems however they can only operate at two speeds: full or low.

Pony motors are available as another capacity control method. Pony motors are smaller fan motors for use in times of reduced loading. The pony motor is typically 1/4 of the Hp of the primary motor and can significantly reduce energy requirements.

Basin Access



The basin/fan section of a centrifugal fan unit is designed for accessibility and ease of maintenance.

Large circular access doors are provided to allow entry into the basin. All float valve and strainer assemblies are located near the door for easy adjustment and cleaning. The sump is designed to catch the dirt accumulated. This can be flushed out simply with a hose. The stainless steel strainers may be easily removed for periodic cleaning.

Stainless Steel Strainers

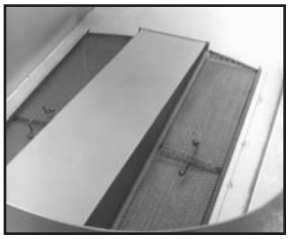

One other component of evaporative cooling equipment which is subject to excessive wear is the suction strainer. EVAPCO provides a Type 304 stainless steel strainer on all units (except remote sump applications) as standard. Strainers are positioned around a large anti-vortex hood in easily handled sections.

SPECIFIC DESIGN FEATURES

LPT Reduced Height and Maintenance Accessibility

The LPT has been designed to satisfy installation requirements where height limits must be observed. The lower profile design of the LPT does not, however, sacrifice maintenance accessibility for reduced height. Its unique casing design allows the water distribution system, cold water basin, fan section and other unit components to be easily maintained.

Small, light-weight sections of the drift eliminators can be easily removed to access the water distribution system. A large circular access door is located on the side of the cold water basin to allow adjustment of the float assembly, removal of the stainless steel strainers and cleaning of the basin. The fan motor and drive system are located at one end of the unit and are completely accessible by removing the inlet screens. Routine bearing lubrication and belt tensioning can be performed from the exterior of the unit without removing the inlet screens.

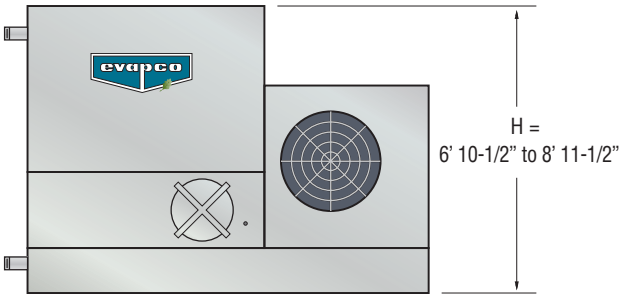

Low Installed Costs

The compact, unitary design of the LPT cooling towers allows it to be shipped completely assembled. This results in lower transportation costs and no assembly requirements at the job site. Note: Options such as sound attenuation and discharge hoods will require additional lifts and some minor assembly.

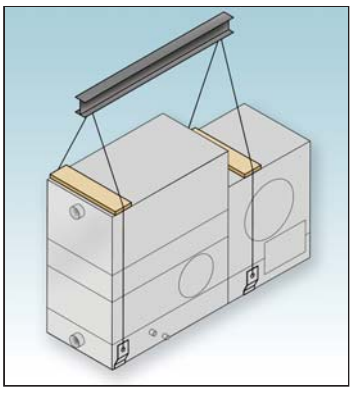

Transport of a Pre-Assembled Unit

Since the LPT ships fully assembled, it is ideal for truck-mounted applications, for remote sites or temporary installations.

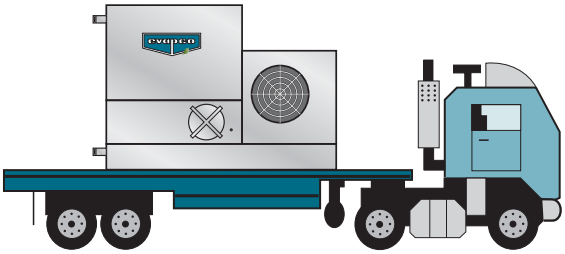

Stainless Steel Cold Water Basin–Standard

The LPT is standard with a stainless steel cold water basin. Optional upgrades to stainless steel water touch basins, stainless steel water touch units and all stainless steel construction are also available on the LPT.



Integral Fan Enclosure for Lower Sound

The LPT comes standard with an integral fan enclosure that reduces sound levels by 2 dB. This 3-sided enclosure also protects the fan and drive system for longer equipment life.

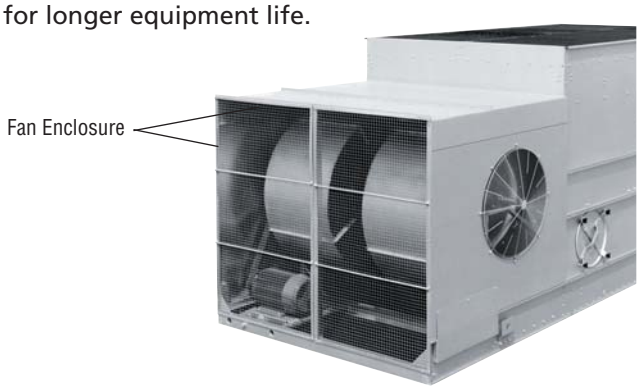

APPLICATION

Application Versatility

Centrifugal units are recommended for a wide range of installations. They are quiet, can easily be hidden, and the increase in fan HP over propeller fan units is generally not significant in the small size range. They are also excellent for installations where sound is sensitive, such as residential neighborhoods, and when the unit must handle external static pressure.



LSTE Unit

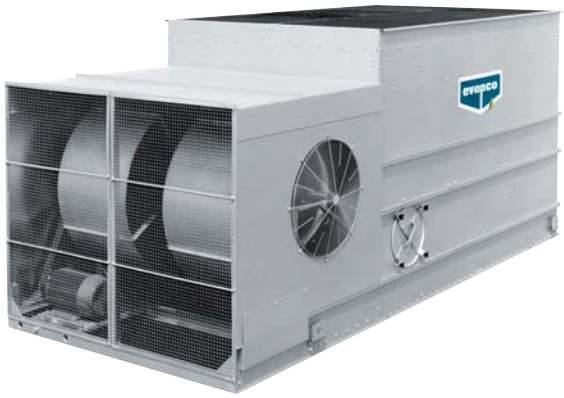

LPT Unit

Very Quiet Operation

Centrifugal fan units operate at low sound levels which make this design preferred for installations with external static pressure where noise is a concern. Additionally, since the sound from the fans is directional, single sided air entry models can be turned away from critical areas avoiding a sound problem. When even quieter operation is necessary, centrifugal fan models can be equipped with optional sound attenuation packages. See the Low Sound Applications section of this catalog or consult the factory for details.

In addition, the LPT features a specially engineered fan enclosure and drive system that is designed to offer very quiet operation without the high cost of external attenuation packages. The LPT fan system was developed through hundreds of hours of laboratory tests resulting in the lowest standardized sound levels available in the industry. In fact, the sound level of the LPT on average is 2 dBA quieter than competitors' similar models.

Indoor Installation

All LSTE and LPT Cooling Towers can be installed indoors where they normally require ductwork to and from the unit. The design of the ductwork should be symmetrical to provide even air distribution across both intake and discharge openings. Guidelines for Ducted Applications:

1) The static pressure loss imposed by the ductwork must not exceed 1/2". The fan motor size must be increased for ESP up to 1/2".
2) For ducted installations, the solid bottom panel option must be ordered. On the LPT blank off plates will also be provided in lieu of the side air inlet screens with this option.
3) NOTE: Access Doors must be located in the ductwork for service to the fan drive components and water distribution system.

Drawings are available showing recommended ductwork connections. See EVAPCO's Layout Guidelines for additional information.

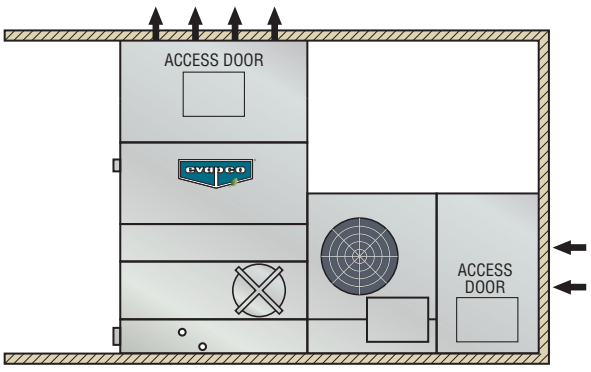

Design

EVAPCO Cooling towers are of heavy-duty construction and designed for long trouble-free operation. Proper equipment selection, installation and maintenance is, however, necessary to ensure full unit performance. Some of the major considerations in the application of a tower are presented below. For additional information, contact the factory.

Piping

Cooling tower piping should be designed and installed in accordance with generally accepted engineering practices. All piping should be anchored by properly designed hangars and supports with allowance made for possible expansion and contraction. No external loads should be placed upon cooling tower connections, nor should any of the piping supports be anchored to the unit framework.

Recirculating Water Quality

Proper water treatment is an essential part of the maintenance required for evaporative cooling equipment. A well designed and consistently implemented water treatment program will help to ensure efficient system operation while maximizing the equipment's service life. A qualified water treatment company should design a site specific water treatment protocol based on equipment (including all metallurgies in the cooling system), location, makeup water quality, and usage.

Air Circulation

In reviewing the system design and unit location, it is important that enough fresh air is provided to enable proper unit performance. The best location is on a unobstructed roof top or at ground level away from walls and other barriers. Care must be taken when locating towers in wells or enclosures or next to high walls. The potential for recirculation of the hot, moist discharge air back into the fan intake exists. Recirculation raises the wetbulb temperature of the entering air, causing the leaving water temperature to rise above the design. For these cases, a discharge hood or ductwork should be provided to raise the overall unit height even with the adjacent wall, thereby reducing the chance of recirculation. For additional information, see the EVAPCO Equipment Layout Manual. Engineering Assistance is also available from the factory to identify potential recirculation problems and recommend solutions.

Bleed off

Evaporative cooling equipment requires a bleed or blowdown line, located on the discharge side of the recirculating pump, to remove concentrated (cycled up) water from the system. Evapco recommends an automated conductivity controller to maximize the water efficiency of your system. Based on recommendations from your water treatment company, the conductivity controller should open and close a motorized ball or solenoid valve to maintain the conductivity of the recirculating water. If a manual valve is used to control the rate of bleed it should be set to maintain the conductivity of the recirculating water during periods of peak load at the maximum level recommended by your water treatment company.

Water Treatment

The water treatment program prescribed for the given conditions must be compatible with the unit's materials of construction, including any galvanized components. The initial commissioning and passivation period is a critical time for maximizing the service life of galvanized equipment. Evapco recommends that the site specific water treatment protocol includes a passivation procedure which details water chemistry, any necessary chemical addition, and visual inspections during the first six (6) to twelve (12) weeks of operation. During this passivation period, recirculating water pH should be maintained above 7.0 and below 8.0 at all times. Batch feeding of chemicals is not recommended.

Control of Biological Contaminants

Evaporative cooling equipment should be inspected regularly to ensure good microbiological control. Inspections should include both monitoring of microbial populations via culturing techniques and visual inspections for evidence of biofouling.

Poor microbiological control can result in loss of heat transfer efficiency, increase corrosion potential, and increase the risk of pathogens such as those that cause Legionnaires' disease. Your site specific water treatment protocol should include procedures for routine operation, startup after a shut-down period, and system lay-up, if applicable. If excessive microbiological contamination is detected, a more aggressive mechanical cleaning and/or water treatment program should be undertaken.

FREEZE PROTECTION AND HEAT LOSS

Pan Freeze Protection

Whenever a cooling tower is idle during subfreezing weather, the water in the sump must be protected from freezing and damaging the pan.

Remote Sump Configuration

The surest way to protect the recirculating water system from freezing is with a remote sump. The remote sump should be located inside the building and below the unit. When a remote sump arrangement is selected, the spray pump is provided by others and installed at the remote sump tower. All water in the cooling towers basin should drain to the remote sump when the spray pump cycles off. When a remote sump is not possible, a supplementary means of heating the pan water must be provided.

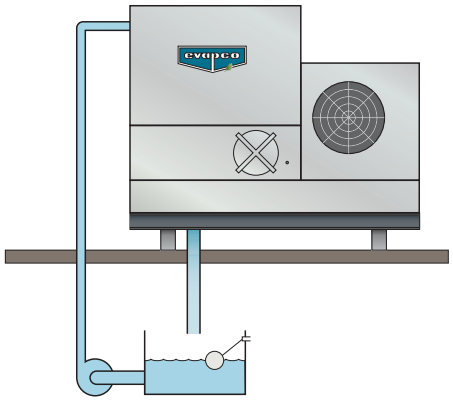

Electric Water Level Control

EVAPCO LPT and LSTE Cooling Towers are available with an optional electric water level control system in place of the standard mechanical make-up valve and float assembly. This package provides accurate control of the pan water level and does not require field adjustment, even under widely variable operating conditions.

The controller was designed by EVAPCO and consists of multiple heavy duty stainless steel electrodes. These electrodes are mounted external to the unit in a vertical standpipe. For winter operation, the standpipe must wrapped with electric heating cable and insulated to protect it from freezing. The weather protected slow closing solenoid valve for the makeup water connection is factory supplied and is ready for piping to a water supply with a pressure between 5 psi (minimum) and 125 psi (maximum).

Basin Heater Package

If a remote sump configuration is not practical, electric basin heater packages are available to keep the pan water from freezing when the unit cycles off. Water lines to and from the unit, spray pump and related piping should be heat traced and insulated up to the overflow level to protect from freezing.

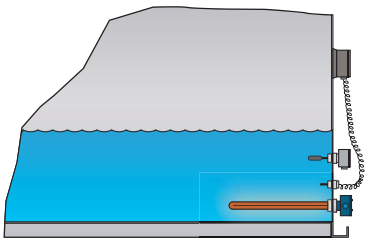

LSTE Basin Heater Sizing

Unit Footprint	kW (0°F)	kW (-20°F)	kW (-40°F)
4' x 6'	(1) 2	(1) 3	(1) 4
4' x 9'	(1) 3	(1) 4	(1) 5
4' x 12'	(1) 3	(1) 5	(1) 7
4' x 18'	(1) 5	(1) 7	(1) 9
5' x 12'	(1) 4	(1) 6	(1) 8
5' x 18'	(2) 3	(2) 4	(1) 12
8P' x 12'	(1) 5	(1) 8	(1) 10
8P' x 18'	(2) 4	(2) 6	(2) 7
8P' x 24'	(2) 5	(2) 7	(2) 10
8P' x 36'	(2) 7	(2) 12	(2) 15
10' x 12'	(1) 7	(1) 10	(1) 15
10' x 18'	(2) 5	(2) 7	(2) 10
10' x 24'	(2) 7	(2) 10	(2) 15
10' x 36'	(2) 10	(4) 7	(4) 9

LPT Basin Heater Sizing

Unit Footprint	kW (0°F)	kW (-20°F)	kW (-40°F)
3' x 6'	(1) 2	(1) 3	(1) 4
5' x 6'	(1) 3	(1) 5	(1) 6
5' x 9'	(1) 4	(1) 6	(1) 8
5' x 12'	(1) 6	(1) 8	(1) 12
8' x 9'	(1) 7	(1) 9	(1) 12
8' x 12'	(1) 9	(1) 12	(1) 16

Hot Water Coils

Pan coils are available as an alternate to using electric basin heaters or a remote sump. Constructed of galvanized pipe and installed in the cooling tower basin, they are supplied without controls and are ready for piping to an external hot water source. Pan water heater controls should be interlocked with the water circulating pump to prevent their operation when the pump is energized.

LSTE/LPT

NON-CHEMICAL WATER TREATMENT SYSTEM

Pulse~Pure®

The LSTE and LPT are available with EVAPCO's optional ***Pulse*~Pure**® non-chemical water treatment system.

The ***Pulse*~Pure**® Water Treatment System utilizes pulsed-power technology to provide CHEMICAL FREE Water Treatment and is an environmentally responsible alternative for treating water in evaporative cooled equipment. It does not release harmful by-products to the environment and eliminates costly chemicals completely from cooling tower drift and blowdown. The ***Pulse*~Pure**® system delivers short, high-frequency bursts of low energy electromagnetic fields to the recirculating water in the LSTE and LPT and will:

- Control Bacteria to Levels Well Below Most Chemical Water Treatment Programs.
- Control the Formation of Mineral Scale on Heat-Exchange Surfaces.
- Save Water by Operating at Higher Cycles of Concentration.
- Yield Corrosion Rates Equivalent to Chemical Water Treatment.

Benefits of offering EVAPCO's ***Pulse*~Pure**® Water Treatment System on the new LSTE/LPT include:

- Integral Cutting Edge Conductivity Control and Blowdown Packages that are contained in a single feeder panel:

Conductivity Control Package – Measures Conductivity Utilizing a Non-Fouling Torodial Probe and Features:

- One power connection of 120 volt or 460 volt is all that is required.
- USB port for downloadable 60 day audit trail of system operation.
- Self draining conductivity loop.

Motorized Blowdown Valve – Standard for the most reliable operation in bleed control. Three-way valve operation provides good bleed flow without a standing column of water.

Because ongoing water treatment service is an absolute requirement for any evaporative cooled system, each purchase of a ***Pulse*~Pure**® Water Treatment System includes, as standard, a 1 year water treatment service and monitoring contract provided by your EVAPCO Representative

EVAPCO's ***Pulse*~Pure**® system offers LSTE/LPT owners a single-source of responsibility for equipment, water treatment and service.



U.S. Patent No. 7,704,364

STEEL SUPPORT

LSTE/LPT

Steel Support

The recommended support for EVAPCO LSTE/LPT is structural "I" beams located under the outer flanges and running the entire length of the unit. Mounting holes 3/4" in diameter are located in the bottom chanels of the pan section to provide for bolting to the structural steel. (Refer to certified drawings from the factory for bolt hole locations.)

Beams should be level to within 1/360 of unit length, not to exceed 1/2" before setting the unit in place. Do not level the unit by shimming between it and the "I" beams as this will not provide proper longitudinal support.

LPT Dimensions

Fill Section Footprint	A1 (Unit Only)	A2 (Unit with Intake Atten.)	B
3' x 6'	10' 1-7/8"	13' 9-5/8"	3' 4-1/2"
5' x 6'	12' 2-7/8"	15' 10-5/8"	5' 5/8"
5' x 9'	15' 2-1/4"	18' 10"	5' 5/8"
5' x 12'	18' 2-5/8"	21' 10-3/8"	5' 5/8"
8' x 9'	15' 2-1/4"	18' 10"	7' 10"
8' x 12'	18' 2-5/8"	21' 10-3/8"	7' 10"

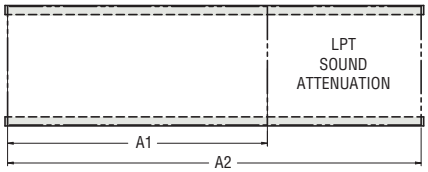

Plan View

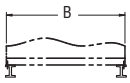

End Elevation

LSTE Dimensions

Unit Footprint	B1 (Unit Only)	B2 (Unit with Intake Atten.)	A
4' x 6'	4' 5/8"	9' 11-1/2"	5' 11-7/8"
4' x 9'	4' 5/8"	9' 11-1/2"	8' 11-1/4"
4' x 12'	4' 5/8"	9' 11-1/2"	11' 11-1/2"
4' x 18'	4' 5/8"	9' 11-1/2"	18' 0"
5' x 12'	5' 5"	11' 3-15/16"	11' 11-1/2"
5' x 18'	5' 5"	11' 3-15/16"	17' 11-7/8"
8P' x 12'	7' 10"	13' 8-7/8"	11' 11-3/4"
8P' x 18'	7' 10"	13' 8-7/8"	18' 0"
8P' x 24'	7' 10"	13' 8-7/8"	24' 1"
8P' x 36'	7' 10"	13' 8-7/8"	36' 2-1/4"
10' x 12'	9' 9-3/4"	15' 8-5/8"	11' 11-3/4"
10' x 18'	9' 9-3/4"	15' 8-5/8"	18' 1/4"
10' x 24'	9' 9-3/4"	15' 8-5/8"	24' 1-1/8"
10' x 36'	9' 9-3/4"	15' 8-5/8"	36' 2-1/2"

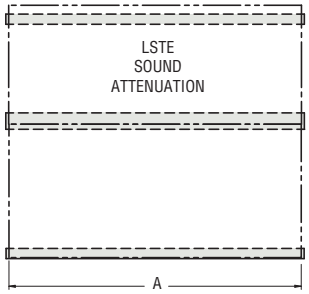

Plan View

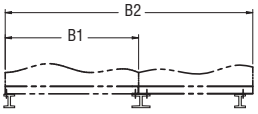

End Elevation

OPTIONAL EQUIPMENT

Electric Water Level Control



Cooling Towers may be ordered with an electric water level control in lieu of the standard mechanical float and make-up assembly. This package provides accurate control of water levels and does not require field adjustment.

Screened Bottom Panels

Protective inlet screens are provided on the sides and/or end of the unit's air intake. Screens are not provided below the fan section since most units are mounted on the roof or at ground level. It is recommended that bottom screens be added to the unit when it will be elevated. These screens can be provided by the factory at an additional cost or added by the installing contractor.

Solid Bottom Panels for Ducted Installations

When centrifugal fan units are installed indoors and intake air is ducted to the unit, a solid bottom panel is required to completely enclose the fan section and prevent the unit from drawing air from the room into the fan intakes. When this option is ordered, air inlet screens are omitted.

Stainless Steel Material Options

The EVAPCOAT Corrosion Protection System is satisfactory for most applications. If additional corrosion protection is required the following stainless steel options are available. Please contact your local EVAPCO representative for pricing.

- Stainless Steel Cold Water Basins– (Standard on LPT Models)
- Stainless Steel Water Touch Basin
- Stainless Steel Water Touch Units
- All Stainless Steel Units

Additional Available Options Include:

- Vibration Cutout Switch
- Electric Basin Heaters
- Vertical Ladders
- Sound Attenuation Packages

LSTE/LPT

OPTIONAL EQUIPMENT FOR LOW SOUND APPLICATIONS

Sound Attenuation Packages

LPT: The standard LPT is the quietest, low profile centrifugal fan cooling tower in the industry. This is achieved by providing the first stage of inlet sound attenuation as part of the LPT 's standard design. The LPT drive system, including the fan housing(s), electric motors, belts, bearings and drives, is completely enclosed by a protective housing which covers the drive system and also provides a significant level of sound reduction.

LSTE: The centrifugal fan design of the LSTE models operate at lower sound levels, which make these units well suited for sound sensitive applications.

If the standard LSTE and LPT sound pressure level is not quiet enough for certain applications, the sound levels can be further reduced by adding various stages of sound attenuation. Consult the factory for Factory Certified Sound Data for each option. Please refer to Evapco's selection software for correct model number designation and CTI Certified performance.

Fan Side Inlet Attenuation
(LPT Only)

Reduces sound radiated from the fan side air intakes and has an open side to allow for air entry. This attenuation package ships loose to be mounted in the field on each side of the tower over the fan intakes.

Inlet Attenuation

Reduces sound radiated through the end and side air intakes. It consists of baffled panels to change the path of the air entry and to capture the radiated noise thus reducing the overall sound levels generated. In addition, the external belt adjustment mechanism is extended through the inlet attenuator to allow easy belt adjustment without having to enter the unit. Solid bottom panels are included with this option to force the inlet air through the attenuator.

Discharge Attenuation

The discharge attenuation hood features a straight sided design with insulated baffles to reduce the overall sound levels of the discharge air. The discharge attenuation incorporates a large access panel to allow entry to the drift eliminators and water distribution system. If a higher discharge velocity is required with minimal sound attenuation, a tapered discharge hood is available.

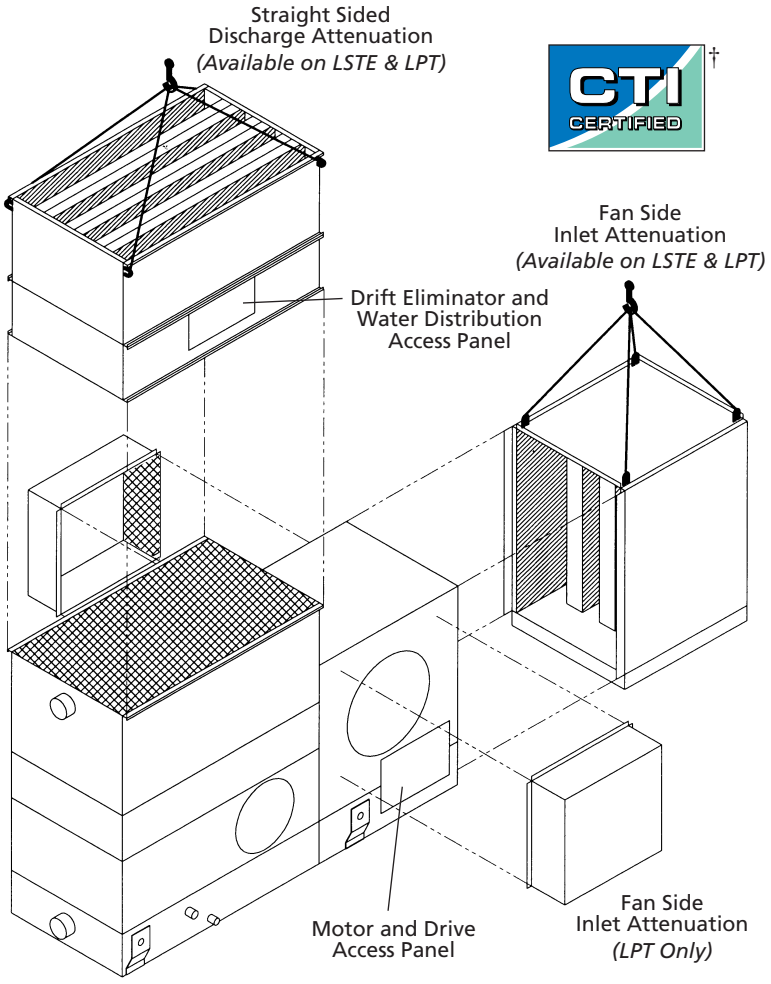

Example of Sound Attenuation on an LPT Model

† Mark owned by the Cooling Technology Institute

DISCHARGE & INTAKE ATTENUATION DIMENSIONS

LSTE

LSTE Discharge Attenuation Dimensions*

Unit Footprint	H1 (in.)	L1 (in.)	W1 (in.)	Weight per Attenuator (lbs.)	Number of Attenuators
4' x 6'	46-7/8	71-7/8	45-1/2	430	1
4' x 9'	46-7/8	107-1/4	45-1/3	570	1
4' x 12'	46-7/8	143-1/2	45-1/4	750	1
4' x 18'	46-7/8	216	45-1/2	1030	1
5' x 12'	47	143-1/2	61-3/4	890	1
5' x 18'	47	216	61-7/8	1220	1
8P' x 12'	71-3/8	143-1/2	95-3/8	1890	1
8P' x 18'	71-3/8	216	95-3/8	2570	1
8P' x 24'	71-3/8	288-1/2	95-3/8	1890	2
8P' x 36'	71-3/8	216	95-1/4	2570	3
10' x 12'	71-3/8	143-1/2	118-7/8	2240	1
10' x 18'	71-3/8	216	119-1/8	3030	1
10' x 24'	71-3/8	288-7/8	118-7/8	2240	2
10' x 36'	71-3/8	433-7/8	119-1/8	3030	3

LSTE Intake Attenuation Dimensions*

Unit Footprint	H2 (in.)	L2 (in.)	W2 (in.)	Weight per Attenuator (lbs.)	Number of Attenuators
4' x 6'	39-3/4	75-5/8	71-3/8	960	1
4' x 9'	39-3/4	111	71-3/8	1310	1
4' x 12'	39-3/4	147-1/4	71-3/8	1660	1
4' x 18'	39-3/4	219-3/4	71-3/8	2440	1
5' x 12'	46	147-1/2	71-3/8	1740	1
5' x 18'	46	219-3/4	71-3/8	2530	1
8P' x 12'	81-1/2	147-3/8	71-3/8	2210	1
8P' x 18'	81-1/2	219-3/4	71-3/8	3680	1
8P' x 24'	81-1/2	292-1/2	71-3/8	2510	2
8P' x 36'	81-1/2	437-3/4	71-3/8	3680	2
10' x 12'	89	147-1/2	71-3/8	2510	1
10' x 18'	89	219-3/4	71-3/8	3900	1
10' x 24'	89	292-3/4	71-3/8	2350	2
10' x 36'	89	437-3/4	71-3/8	3900	2

* Attenuation dimensions may vary slightly from catalog. See Factory certified prints for exact dimensions.

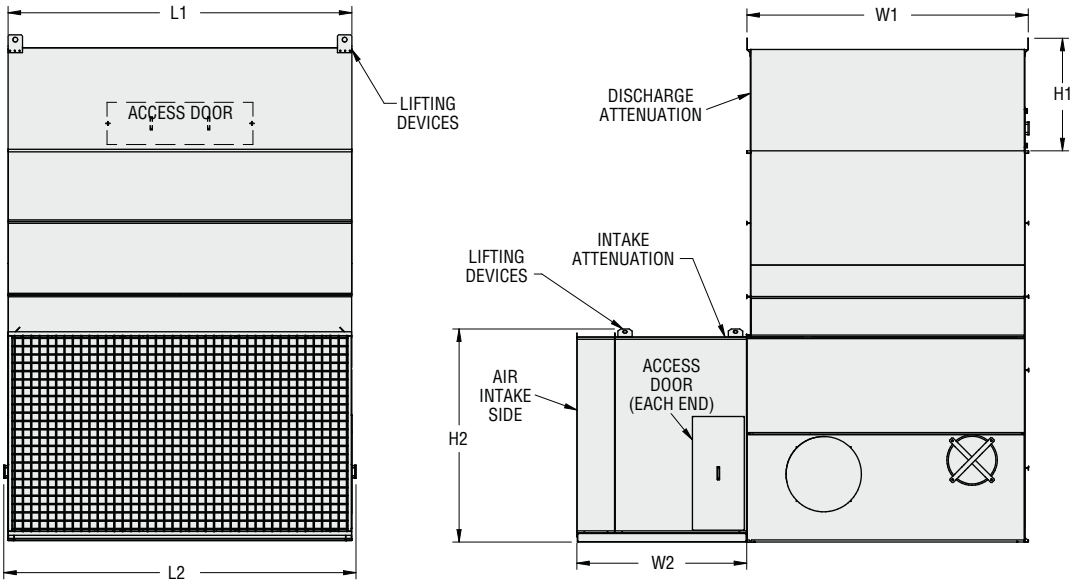

LSTE Attenuation

Note: Intake Sound Attenuation must be fully supported. If the recommended steel support is being used, a third I-Beam is required for the Intake Attenuation. Refer to page 13 for A, B1 and B2 dimensions.

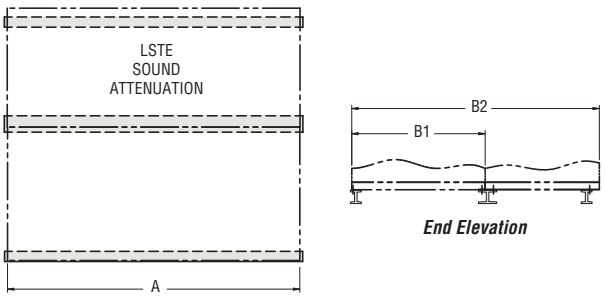

Plan View

End Elevation

LPT

DISCHARGE & INTAKE ATTENUATION DIMENSIONS

LPT Discharge Attenuation Dimensions*

Fill Section Footprint	H1 (in.)	L1 (in.)	W1 (in.)	Weight per Attenuator (lbs.)	Number of Attenuators
3' x 6'	43-3/8	71-3/4	40-1/2	430	1
5' x 6'	43-3/8	71-3/4	60-5/8	530	1
5' x 9'	43-3/8	107-1/4	60-5/8	720	1
5' x 12'	43-3/8	143-5/8	60-5/8	920	1
8' x 9'	43-3/8	107-1/4	94	970	1
8' x 12'	55-3/8	143-5/8	94	1230	1

LPT Fan End Attenuation Dimensions*

Fill Section Footprint	H2 (in.)	L2 (in.)	W2 (in.)	Weight per Attenuator (lbs.)	Number of Attenuators
3' x 6'	63-7/8	40-1/2	43-5/8	450	1
5' x 6'	79-5/8	60-5/8	43-1/2	690	1
5' x 9'	79-5/8	60-5/8	43-1/2	690	1
5' x 12'	79-5/8	60-5/8	43-1/2	690	1
8' x 9'	79-5/8	94-1/4	43-5/8	920	1
8' x 12'	79-5/8	94-1/4	43-5/8	920	1

LPT Fan Side Attenuation Dimensions*

Fill Section Footprint	H3 (in.)	L3 (in.)	W3 (in.)	Weight per Attenuator (lbs.)	Number of Attenuators
3' x 6'	33-5/8	64-3/4	34-3/4	150	2
5' x 6'	36-7/8	84-7/8	54	230	2
5' x 9'	36-7/8	84-7/8	54	230	2
5' x 12'	36-7/8	84-7/8	54	230	2
8' x 9'	42-3/8	118-1/2	44-1/8	230	2
8' x 12'	42-3/8	118-1/2	44-1/8	230	2

* Attenuation dimensions may vary slightly from catalog. See Factory certified prints for exact dimensions.

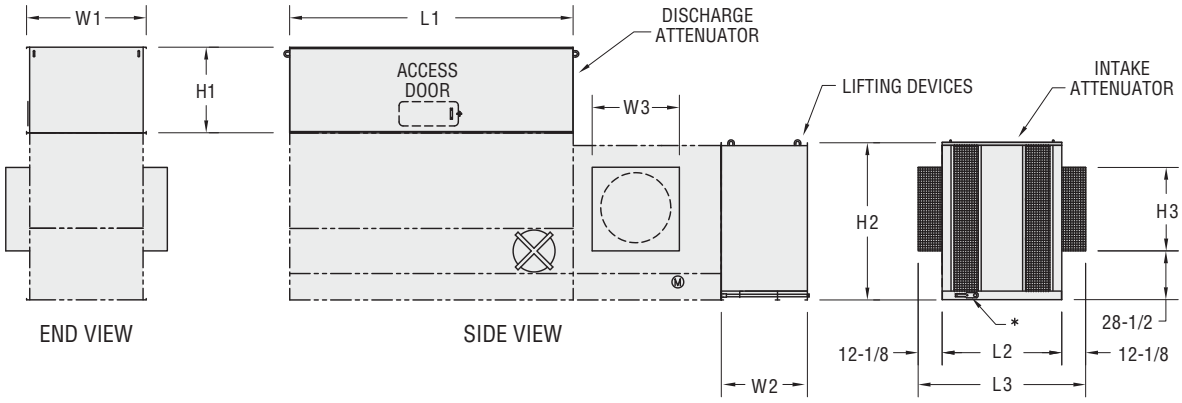

LPT Attenuation

Note: Intake Sound Attenuation must be fully supported. If the recommended steel support is being used, an extended I-Beam is required for the Intake Attenuation. Refer to page 13.

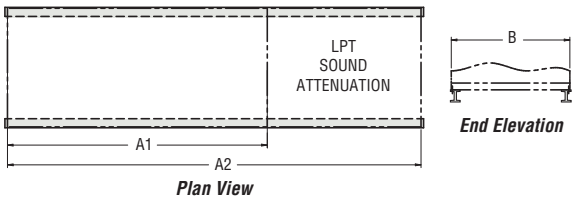

End Elevation

Plan View

SPECIFICATIONS

LSTE/LPT

SECTION 23 65 00 – FACTORY-FABRICATED COOLING TOWERS

PART 1 – GENERAL

1.1 RELATED DOCUMENTS
- A. Drawings and general provisions of the Contract, including General and Supplementary Conditions and Division 1 Specification Sections, apply to this section.

1.2 SUMMARY:
- A. This Section includes factory assembled and tested, open circuit, forced draft counterflow cooling tower.

1.3 SUBMITTALS
- A. General. Submit the following:
  1. Certified drawings of the cooling tower, sound data, recommended steel support indicating weight loadings, wiring diagrams, installation instructions, operation and maintenance instructions, and thermal performance guarantee by the manufacturer.

1.4 QUALITY ASSURANCE
- A. Verification of Performance:
  1. Test and certify cooling tower thermal performance according to CTI Standard 201.
  2. Test and certify cooling tower sound performance according to CTI ATC-128.
- B. Meet or Exceed energy efficiency per ASHRAE 90.1.

1.5 WARRANTY
- A. Motor/Drive System: Five (5) year comprehensive warranty against materials and workmanship including motor, fan, bearings, mechanical support, sheaves, bushings and belt.
- B. Unit: One (1) year from start-up, not to exceed eighteen (18) months from shipment on the unit.

PART 2 - PRODUCTS

2.1 MANUFACTURERS
- A. Manufactures: Subject to compliance with requirements, provide cooling towers manufactured by one of the following:
  1. EVAPCO, Inc.
  2. Approved Substitute

2.2 MATERIALS
- A. Galvanized Sheet Steel complying with ASTM A 653/A 653M and having G-235 designation.
- B. Optional Type 304 and/or 316 Stainless Steel as specified.

2.3 FORCED-DRAFT, COUNTERFLOW COOLING TOWERS
- A. Description: Factory assembled and tested, forced draft counterflow cooling tower complete with fill, fan, louvers, accessories, and rigging supports.
- B. Cooling Tower Characteristics and Capacities: Refer to the Cooling Tower schedule.
- C. Fan(s):
  1. Type and Material: forward curved, centrifugal of hotdipped galvanized construction. The fans shall be factory installed, and statically and dynamically balanced for vibration free operation.
  2. Fan Housing: The complete drive system, including the electric motor, belts, bearings, fan, and drives shall be completely enclosed in a protective housing which covers the drive system and provides sound reduction.
  3. Maximum sound pressure level of _____dB(A) measured at 5 feet above the fan discharge during full speed operation in accordance with CTI Standard ATC-128.
- D. Water Distribution System: Non-corrosive materials.
  1. Evenly distribute of water over fill material with pressurized spray tree.
     a. Pipes: Schedule 40 PVC, Non-corrosive Materials
     b. Nozzles: Non-clogging, ABS Plastic, threaded into branch piping.
  2. Maximum pressure at inlet shall be ____ psig.
- E. IBC Compliance: The unit structure shall be designed, analyzed, and constructed in accordance with the latest edition of the International Building Code (IBC) Regulations for seismic loads up to _____ g or wind loads up to __ psf.
- F. Collection Basin Material: Type 304 Stainless Steel (Standard LPT, optional LSTE) or Heavy Gauge G-235 Galvanized Steel (Standard LSTE, optional LPT) for long life and durability:
  1. Removable Type 304 Stainless Steel strainer with openings smaller than nozzle orifices.
  2. Joints: Bolted and sealed watertight.
  3. Overflow, Makeup and Drain connections: G-235 Galvanized Steel (MPT).
  4. Outlet Connection: G-235 Galvanized Steel Beveled for weld and grooved for mechanical coupling.
- G. Casing: Heavy Gauge G-235 Galvanized Steel or Type 304 Stainless Steel (Optional):
  1. Casing panels shall totally encase the fill media to protect the fill from damage due to direct atmospheric exposure. All galvanized steel panel edges shall be coated with a 95% pure zinc compound during fabrication.
  2. Fasteners: Corrosion resistance equal to or better than materials being fastened.
  3. Joints: Sealed watertight.
  4. Welded Connections: Continuous and watertight
- H. Fill Media: PVC; resistant to rot, decay and biological attack; formed, crossfluted bonded together for strength and durability in block format for easy removal and replacement; suitable for use as a working surface; self extinguishing with flame spread rating of 5 per ASTM E84-81a; able to withstand continuous operating temperature of 130ºF; and fabricated, formed and installed by the manufacturer to ensure water breaks up into droplets.
- I. Drift Eliminators: Same material as Fill. 0.001% drift rate.
- J. Protective Air Inlet Screens: Galvanized Steel
- K. Water Level Control: Brass mechanical makeup water valve and plastic float with an adjustable linkage.

2.4 MOTORS AND DRIVES
- A. General requirements for motors are specified in Division 23 Section "Motors".
- B. Enclosure Type: TEFC
- C. Motor Speed: Premium Efficient Inverter-Ready (Option: 2-speed)
- D. Drive: Power Band Belt designed for 150% of the motor nameplate HP.
  1. Belt: V-belt type neoprene.
  2. Sheaves: Aluminum alloy, taper lock design.
  3. Bearings: Heavy duty, self-aligning bearings with extended grease lines and fittings.
  4. Fan Shaft: Solid steel (LPT) or hollow steel with forged bearing journals (LSTE).
  5. Vibration Cutout Switch (Optional): Mechanical switch to de-energize fan motors if excessive vibration in NEMA 4 enclosure.

2.5 MAINTENANCE ACCESS
- A. Access Door: A circular access door shall be located above the basin to allow for easy access to the pan interior.
- B. Ladders: Aluminum, vertical complying with 29 CFR 1910.27.

2.6 SOUND ATTENUATION (OPTIONAL)
- A. Inlet Attenuation: Materials to be same as basin section. Baffled panels shall change the path of air entry and capture radiated noise. External belt adjustment and lubrication points shall be provided.
- B. Discharge Attenuation: Straight sided discharge hood with insulated baffles to reduce the overall sound level of the discharge air. A large access panel to allow access to the water distribution system and drift eliminators shall be provided.

MODELS LSTE-416 TO 439

Thermal performance certified by the Cooling Technology Institute (CTI) in accordance with CTI Standard STD-201 †

To Make a Selection:
Locate the column with the desired operating temperature conditions. Read down the column until you find the GPM equal to or greater than the flow required. Read horizontally to the left to find the model number of the unit that will perform the duty.

		COOLING CAPACITY IN GPM									
		TEMP °F									
		EWT	90°	95°	90°	95°	90°	95°	90°	95°	95°	100°
	MOTOR	LWT	80°	80°	80°	80°	80°	80°	80°	80°	85°	85°
MODEL NO.	HP	WB	66°	66°	68°	68°	70°	70°	72°	72°	75°	75°
LSTE-416	(1) 2		135	102	124	94	108	83	92	73	125	96
LSTE-426	(1) 3		157	120	144	109	126	97	108	85	146	112
LSTE-436	(1) 5		189	145	173	133	152	118	131	104	175	136
LSTE-446	(1) 7.5		217	168	200	154	176	137	152	121	202	158
LSTE-456	(1) 7.5		236	186	218	172	194	155	170	138	221	176
LSTE-466	(1) 10		258	205	239	189	213	171	187	152	242	193
LSTE-419	(1) 7.5		285	219	262	200	230	178	198	156	265	205
LSTE-429	(1) 10		315	243	290	223	255	198	220	175	293	228
LSTE-439	(1) 10		343	270	318	250	283	225	247	200	321	255

		COOLING CAPACITY IN GPM									
		TEMP °F									
		EWT	95°	100°	95°	97°	100°	102°	95°	97°	100°	102°
	MOTOR	LWT	85°	85°	85°	87°	85°	87°	85°	87°	85°	87°
MODEL NO.	HP	WB	76°	76°	78°	78°	78°	78°	80°	80°	80°	80°
LSTE-416	(1) 2		117	90	100	125	78	96	80	105	65	83
LSTE-426	(1) 3		136	105	116	145	92	113	93	123	76	97
LSTE-436	(1) 5		165	128	141	175	111	137	114	149	92	118
LSTE-446	(1) 7.5		190	149	164	202	130	159	132	172	108	137
LSTE-456	(1) 7.5		209	167	182	220	147	176	150	190	124	154
LSTE-466	(1) 10		229	183	200	241	162	194	165	209	137	170
LSTE-419	(1) 7.5		249	193	213	264	168	206	171	225	139	178
LSTE-429	(1) 10		276	215	237	292	187	229	191	249	156	198
LSTE-439	(1) 10		303	242	264	321	213	256	217	277	180	224

Note: For alternate selections and conditions other than those stated, consult your evap*Select* selection program or local EVAPCO representative.

† Mark Owned by the Cooling Technology Institute.

ENGINEERING DATA & DIMENSIONS

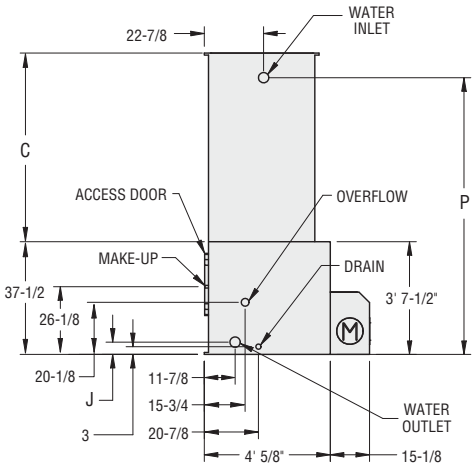

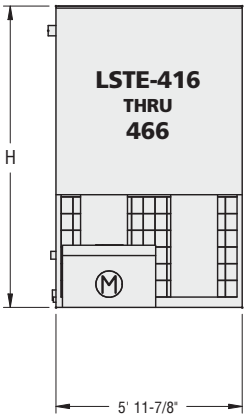

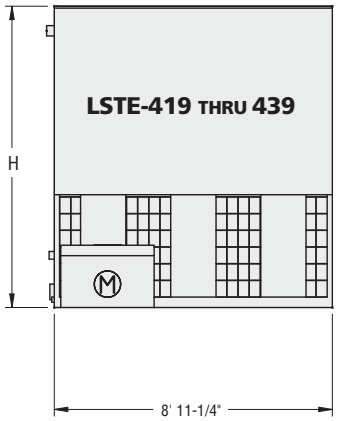

SMALL CENTRIFUGAL FAN MODELS — LSTE-416 TO 439

MODEL NO.	WEIGHT (LBS.)		NO. FANS	FAN MOTOR HP*	AIR FLOW CFM	DIMENSIONS				CONNECTIONS (IN.)				
	SHIPPING	OPERATING				H	P	C	J	WATER IN	WATER OUT	MAKE UP	DRAIN	OVER FLOW
LSTE-416	1,640	2,300	2	2	9,100	8' 8-1/4"	7' 10-3/4"	5' 3/4	4-3/4"	4"	4"	1"	2"	3"
LSTE-426	1,670	2,330	2	3	10,300	8' 8-1/4"	7' 10-3/4"	5' 3/4	4-3/4"	4"	4"	1"	2"	3"
LSTE-436	1,680	2,340	2	5	12,100	8' 8-1/4"	7' 10-3/4"	5' 3/4	4-3/4"	4"	4"	1"	2"	3"
LSTE-446	1,730	2,390	2	7.5	13,700	8' 8-1/4"	7' 10-3/4"	5' 3/4	4-3/4"	4"	4"	1"	2"	3"
LSTE-456	1,800	2,460	2	7.5	13,300	9' 8-1/4"	8' 10-3/4"	6' 3/4	4-3/4"	4"	4"	1"	2"	3"
LSTE-466	1,810	2,470	2	10	14,500	9' 8-1/4"	8' 10-3/4"	6' 3/4	4-3/4"	4"	4"	1"	2"	3"
LSTE-419	2,270	3,290	3	7.5	18,300	8' 8-1/4"	7' 10-3/4"	5' 3/4	6"	4"	4"	1"	2"	3"
LSTE-429	2,280	3,300	3	10	19,900	8' 8-1/4"	7' 10-3/4"	5' 3/4	6"	4"	4"	1"	2"	3"
LSTE-439	2,310	3,330	3	10	19,400	9' 8-1/4"	8' 10-3/4"	6' 3/4	6"	4"	4"	1"	2"	3"

NOTES:
1. An adequately sized bleed line must be installed in the cooling tower system to prevent build-up of impurities in the recirculated water.
2. Connections smaller than 6" are MPT. Connections 6˝ or larger are Beveled For Weld/Grooved for mechanical coupling (BFW/Grooved).
3. Do not use catalog drawings for certified prints. Dimensions are subject to change.

* For external static pressure up to 1/2˝, use next size fan motor.

MODELS LSTE-4112 TO 4518

Thermal performance certified by the Cooling Technology Institute (CTI) in accordance with CTI Standard STD-201 †

To Make a Selection:
Locate the column with the desired operating temperature conditions. Read down the column until you find the GPM equal to or greater than the flow required. Read horizontally to the left to find the model number of the unit that will perform the duty.

		COOLING CAPACITY IN GPM									
		TEMP °F									
		EWT	90°	95°	90°	95°	90°	95°	90°	95°	95°	100°
	MOTOR	LWT	80°	80°	80°	80°	80°	80°	80°	80°	85°	85°
MODEL NO.	HP	WB	66°	66°	68°	68°	70°	70°	72°	72°	75°	75°
LSTE-4112	(1) 10		384	295	352	270	309	239	266	211	357	276
LSTE-4212	(1) 10		422	331	390	305	346	274	302	243	394	312
LSTE-4312	(1) 10		441	351	409	326	366	295	322	264	414	332
LSTE-4412	(1) 15		480	379	445	350	396	315	346	280	450	357
LSTE-4512	(1) 15		500	399	464	370	415	335	366	301	470	378
LSTE-4612	(1) 20		546	436	507	405	454	367	401	330	513	413
LSTE-4118	(1) 20		642	496	591	455	520	404	449	356	598	465
LSTE-4218	(1) 20		701	552	648	510	577	458	504	408	656	521
LSTE-4318	(1) 25		752	594	697	549	620	494	543	440	705	561
LSTE-4418	(1) 25		783	624	727	580	650	526	573	472	735	591
LSTE-4518	(1) 30		827	661	769	614	688	556	607	500	777	626

		COOLING CAPACITY IN GPM									
		TEMP °F									
		EWT	95°	100°	95°	97°	100°	102°	95°	97°	100°	102°
	MOTOR	LWT	85°	85°	85°	87°	85°	87°	85°	87°	85°	87°
MODEL NO.	HP	WB	76°	76°	78°	78°	78°	78°	80°	80°	80°	80°
LSTE-4112	(1) 10		335	260	287	356	226	278	231	302	188	239
LSTE-4212	(1) 10		372	295	322	393	260	313	265	339	219	273
LSTE-4312	(1) 10		392	316	343	413	281	334	285	359	239	294
LSTE-4412	(1) 15		425	339	370	449	299	359	305	388	252	314
LSTE-4512	(1) 15		444	359	390	468	320	379	325	407	273	335
LSTE-4612	(1) 20		486	393	426	512	350	415	356	445	300	367
LSTE-4118	(1) 20		562	438	482	596	382	468	390	508	317	404
LSTE-4218	(1) 20		619	493	538	654	435	523	443	565	367	457
LSTE-4318	(1) 25		665	532	580	703	470	563	478	608	397	493
LSTE-4418	(1) 25		696	563	610	733	501	594	509	638	428	525
LSTE-4518	(1) 30		736	596	646	775	531	629	540	675	454	556

Note: For alternate selections and conditions other than those stated, consult your evap*Select* selection program or local EVAPCO representative.

† Mark Owned by the Cooling Technology Institute.

ENGINEERING DATA & DIMENSIONS

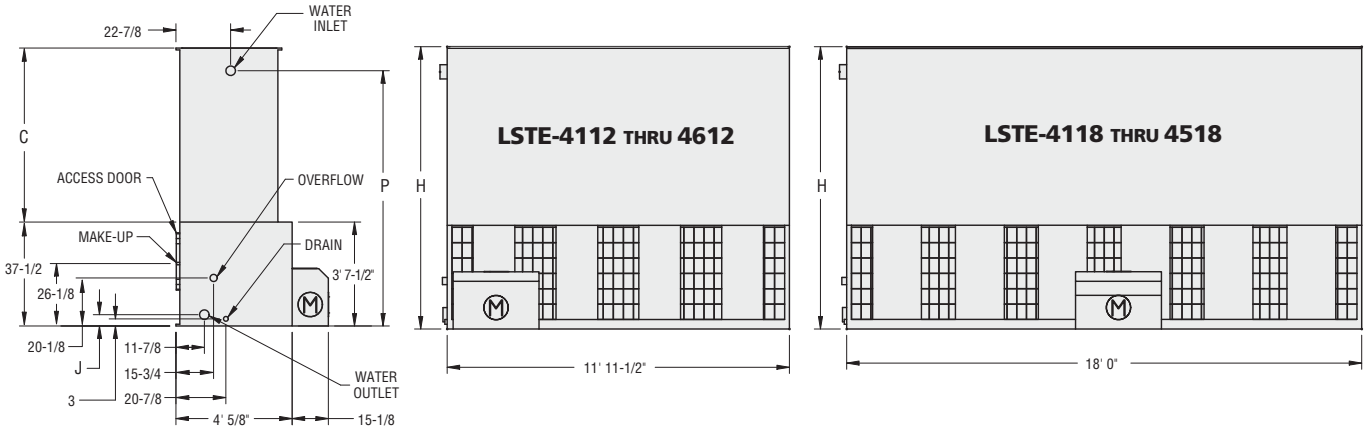

SMALL CENTRIFUGAL FAN MODELS — LSTE-4112 TO 4518

MODEL NO.	WEIGHT (LBS.)		NO. FANS	FAN MOTOR HP*	AIR FLOW CFM	DIMENSIONS				CONNECTIONS (IN.)				
	SHIPPING	OPERATING				H	P	C	J	WATER IN	WATER OUT	MAKE UP	DRAIN	OVER FLOW
LSTE-4112	2,930	4,240	4	10	24,400	8' 10-3/8"	7' 11-7/8"	5' 2-7/8	6"	6"	6"	1"	2"	3"
LSTE-4212	3,110	4,420	4	10	23,800	9' 10-3/8"	8' 11-7/8"	6' 2-7/8	6"	6"	6"	1"	2"	3"
LSTE-4312	3,300	4,610	4	10	23,000	10' 10-3/8"	9' 11-7/8"	7' 2-7/8	6"	6"	6"	1"	2"	3"
LSTE-4412	3,240	4,550	4	15	26,900	9' 10-3/8"	8' 11-7/8"	6' 2-7/8	6"	6"	6"	1"	2"	3"
LSTE-4512	3,430	4,740	4	15	26,000	10' 10-3/8"	9' 11-7/8"	7' 2-7/8	6"	6"	6"	1"	2"	3"
LSTE-4612	3,490	4,800	4	20	28,400	10' 10-3/8"	9' 11-7/8"	7' 2-7/8	6"	6"	6"	1"	2"	3"
LSTE-4118	4,330	6,330	6	20	40,200	8' 10-3/8"	7' 11-7/8"	5' 2-7/8	6"	6"	6"	1"	2"	3"
LSTE-4218	4,600	6,600	6	20	39,200	9' 10-3/8"	8' 11-7/8"	6' 2-7/8	6"	6"	6"	1"	2"	3"
LSTE-4318	4,630	6,630	6	25	41,900	9' 10-3/8"	8' 11-7/8"	6' 2-7/8	6"	6"	6"	1"	2"	3"
LSTE-4418	4,910	6,910	6	25	40,600	10' 10-3/8"	9' 11-7/8"	7' 2-7/8	6"	6"	6"	1"	2"	3"
LSTE-4518	4,960	6,960	6	30	42,900	10' 10-3/8"	9' 11-7/8"	7' 2-7/8	6"	6"	6"	1"	2"	3"

NOTES:
1. An adequately sized bleed line must be installed in the cooling tower system to prevent build-up of impurities in the recirculated water.
2. Connections smaller than 6" are MPT. Connections 6" or larger are Beveled For Weld/Grooved for mechanical coupling (BFW/Grooved).
3. Do not use catalog drawings for certified prints. Dimensions are subject to change.

* For external static pressure up to 1/2", use next size fan motor.

MODELS LSTE-5112 TO 5718

Thermal performance certified by the Cooling Technology Institute (CTI) in accordance with CTI Standard STD-201 †

To Make a Selection:
Locate the column with the desired operating temperature conditions. Read down the column until you find the GPM equal to or greater than the flow required. Read horizontally to the left to find the model number of the unit that will perform the duty.

		COOLING CAPACITY IN GPM									
		TEMP °F									
		EWT	90°	95°	90°	95°	90°	95°	90°	95°	95°	100°
	MOTOR	LWT	80°	80°	80°	80°	80°	80°	80°	80°	85°	85°
MODEL NO.	HP	WB	66°	66°	68°	68°	70°	70°	72°	72°	75°	75°
LSTE-5112	(1) 20		624	483	575	443	506	394	437	347	582	453
LSTE-5212	(1) 20		683	538	632	497	562	447	491	398	639	508
LSTE-5312	(1) 25		731	578	677	534	603	481	528	429	685	545
LSTE-5412	(1) 25		760	607	706	563	632	511	557	459	714	574
LSTE-5512	(1) 30		803	642	747	596	669	541	590	486	755	608
LSTE-5118	(1) 25		885	681	813	624	714	554	616	488	823	638
LSTE-5218	(1) 30		942	728	867	668	763	594	659	523	878	683
LSTE-5318	(1) 40		1036	807	956	741	846	661	732	583	968	758
LSTE-5418	(1) 30		1027	809	951	748	846	672	739	598	962	763
LSTE-5518	(1) 40		1124	890	1042	823	929	741	814	661	1054	840
LSTE-5618	(1) 40		1169	933	1087	867	973	786	858	707	1098	884
LSTE-5718	(1) 50		1251	1000	1163	930	1042	843	920	759	1176	948

		COOLING CAPACITY IN GPM									
		TEMP °F									
		EWT	95°	100°	95°	97°	100°	102°	95°	97°	100°	102°
	MOTOR	LWT	85°	85°	85°	87°	85°	87°	85°	87°	85°	87°
MODEL NO.	HP	WB	76°	76°	78°	78°	78°	78°	80°	80°	80°	80°
LSTE-5112	(1) 20		547	427	470	580	372	456	380	495	309	393
LSTE-5212	(1) 20		604	481	525	638	424	510	432	551	358	447
LSTE-5312	(1) 25		647	517	564	683	457	548	465	591	386	480
LSTE-5412	(1) 25		676	547	593	712	487	577	495	620	416	510
LSTE-5512	(1) 30		715	579	627	753	516	611	524	656	442	540
LSTE-5118	(1) 25		772	602	663	821	524	642	534	698	434	553
LSTE-5218	(1) 30		825	644	708	875	561	687	572	746	466	593
LSTE-5318	(1) 40		911	716	786	965	625	762	637	827	520	660
LSTE-5418	(1) 30		908	723	789	959	638	767	650	828	538	671
LSTE-5518	(1) 40		996	797	868	1051	704	844	717	910	595	740
LSTE-5618	(1) 40		1040	841	912	1096	750	888	762	954	641	785
LSTE-5718	(1) 50		1113	902	978	1173	804	952	817	1022	689	842

Note: For alternate selections and conditions other than those stated, consult your evap*Select* selection program or local EVAPCO representative.

† Mark Owned by the Cooling Technology Institute.

ENGINEERING DATA & DIMENSIONS

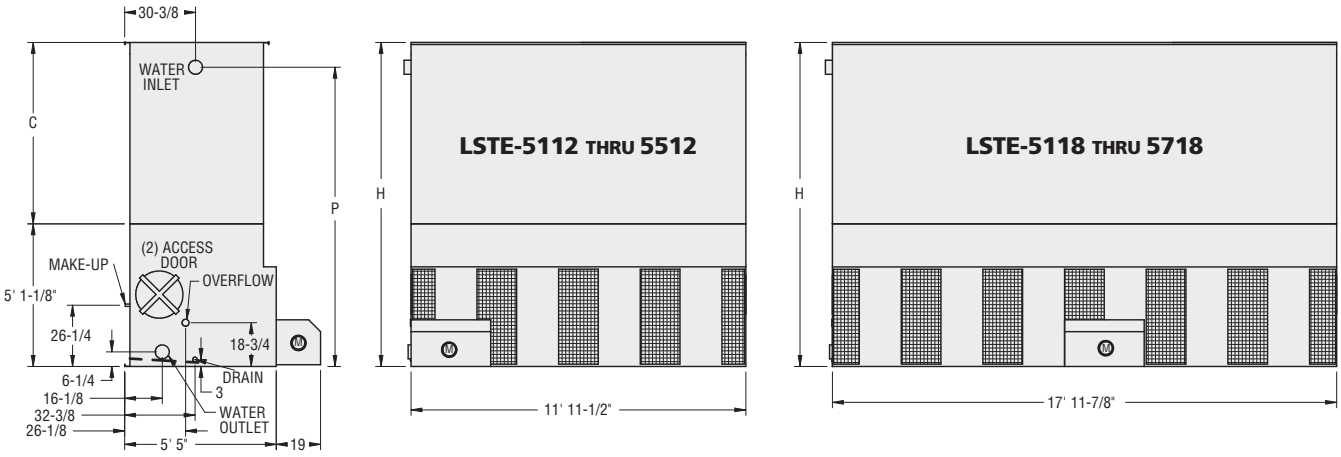

SMALL CENTRIFUGAL FAN MODELS — LSTE-5112 TO 5718

MODEL NO.	WEIGHT (LBS.)		NO. FANS	FAN MOTOR HP*	AIR FLOW CFM	DIMENSIONS			CONNECTIONS (IN.)				
	SHIPPING	OPERATING				H	P	C	WATER IN	WATER OUT	MAKE UP	DRAIN	OVER FLOW
LSTE-5112	4,130	6,250	4	20	38,700	10' 6-7/8"	9' 8-1/4"	5' 5-3/4"	6	6	1	2	3
LSTE-5212	4,370	6,490	4	20	37,600	11' 6-7/8"	10' 8-1/4"	6' 5-3/4"	6	6	1	2	3
LSTE-5312	4,400	6,520	4	25	40,400	11' 6-7/8"	10' 8-1/4"	6' 5-3/4"	6	6	1	2	3
LSTE-5412	4,640	6,760	4	25	39,500	12' 6-7/8"	11' 8-1/4"	7' 5-3/4"	6	6	1	2	3
LSTE-5512	4,690	6,810	4	30	41,800	12' 6-7/8"	11' 8-1/4"	7' 5-3/4"	6	6	1	2	3
LSTE-5118	5,970	9,160	6	25	55,100	10' 6-7/8"	9' 8-1/4"	5' 5-3/4"	6	6	2	2	3
LSTE-5218	6,020	9,210	6	30	58,400	10' 6-7/8"	9' 8-1/4"	5' 5-3/4"	6	6	2	2	3
LSTE-5318	6,180	9,370	6	40	64,000	10' 6-7/8"	9' 8-1/4"	5' 5-3/4"	6	6	2	2	3
LSTE-5418	6,370	9,560	6	30	56,800	11' 6-7/8"	10' 8-1/4"	6' 5-3/4"	6	6	2	2	3
LSTE-5518	6,530	9,720	6	40	62,200	11' 6-7/8"	10' 8-1/4"	6' 5-3/4"	6	6	2	2	3
LSTE-5618	6,880	10,070	6	40	60,800	12' 6-7/8"	11' 8-1/4"	7' 5-3/4"	6	6	2	2	3
LSTE-5718	6,890	10,080	6	50	63,200	12' 6-7/8"	11' 8-1/4"	7' 5-3/4"	6	6	2	2	3

NOTES:
1. An adequately sized bleed line must be installed in the cooling tower system to prevent build-up of impurities in the recirculated water.
2. Connections smaller than 6" are MPT. Connections 6" or larger are Beveled For Weld/Grooved for mechanical coupling (BFW/Grooved).
3. Do not use catalog drawings for certified prints. Dimensions are subject to change.

* For external static pressure up to 1/2", use next size fan motor.

MODELS LSTE-8P112 TO 8P536

Thermal performance certified by the Cooling Technology Institute (CTI) in accordance with CTI Standard STD-201 †

To Make a Selection:
Locate the column with the desired operating temperature conditions. Read down the column until you find the GPM equal to or greater than the flow required. Read horizontally to the left to find the model number of the unit that will perform the duty.

		COOLING CAPACITY IN GPM									
		TEMP °F									
		EWT	90°	95°	90°	95°	90°	95°	90°	95°	95°	100°
	MOTOR	LWT	80°	80°	80°	80°	80°	80°	80°	80°	85°	85°
MODEL NO.	HP	WB	66°	66°	68°	68°	70°	70°	72°	72°	75°	75°
LSTE-8P112	(1) 30		939	724	864	663	759	589	654	519	875	679
LSTE-8P212	(1) 40		1035	803	954	737	842	657	728	579	966	754
LSTE-8P312	(1) 40		1126	889	1043	822	928	739	812	659	1055	839
LSTE-8P412	(1) 40		1172	935	1089	868	974	787	859	707	1101	885
LSTE-8P512	(1) 50		1255	1002	1166	931	1044	844	921	759	1179	949
LSTE-8P118	(1) 40		1360	1045	1248	957	1097	850	944	747	1264	979
LSTE-8P218	(1) 50		1469	1133	1351	1040	1189	925	1026	814	1368	1064
LSTE-8P318	(1) 40		1492	1171	1379	1080	1224	970	1068	862	1395	1104
LSTE-8P418	(1) 50		1603	1262	1483	1165	1319	1048	1152	933	1500	1190
LSTE-8P518	(1) 60		1698	1341	1573	1239	1400	1115	1225	993	1591	1265
LSTE-8P618	(1) 60		1768	1410	1642	1310	1469	1187	1295	1066	1660	1335
LSTE-8P124	(2) 25		1938	1519	1791	1402	1589	1258	1385	1118	1812	1432
LSTE-8P224	(2) 40		2070	1606	1909	1474	1684	1313	1456	1157	1933	1508
LSTE-8P324	(2) 40		2252	1778	2086	1643	1857	1478	1624	1317	2110	1678
LSTE-8P424	(2) 40		2345	1870	2178	1737	1949	1574	1718	1414	2202	1771
LSTE-8P524	(2) 50		2509	2004	2332	1862	2088	1688	1842	1518	2357	1899
LSTE-8P136	(3) 30		2818	2171	2591	1989	2277	1768	1963	1557	2625	2036
LSTE-8P236	(3) 40		3104	2409	2863	2211	2526	1970	2184	1736	2899	2262
LSTE-8P336	(3) 40		3377	2667	3128	2465	2785	2218	2437	1976	3165	2517
LSTE-8P436	(3) 40		3517	2805	3267	2605	2923	2361	2577	2121	3303	2656
LSTE-8P536	(3) 50		3764	3007	3498	2793	3132	2532	2763	2278	3536	2848

		COOLING CAPACITY IN GPM									
		TEMP °F									
		EWT	95°	100°	95°	97°	100°	102°	95°	97°	100°	102°
	MOTOR	LWT	85°	85°	85°	87°	85°	87°	85°	87°	85°	87°
MODEL NO.	HP	WB	76°	76°	78°	78°	78°	78°	80°	80°	80°	80°
LSTE-8P112	(1) 30		821	640	705	872	557	682	568	742	462	588
LSTE-8P212	(1) 40		908	712	782	964	621	758	633	823	516	656
LSTE-8P312	(1) 40		996	796	868	1052	703	843	715	909	593	738
LSTE-8P412	(1) 40		1042	843	914	1098	750	889	763	955	641	786
LSTE-8P512	(1) 50		1116	903	979	1176	805	954	819	1024	689	843
LSTE-8P118	(1) 40		1186	923	1016	1261	803	984	819	1072	666	848
LSTE-8P218	(1) 50		1285	1003	1103	1364	873	1070	891	1162	725	923
LSTE-8P318	(1) 40		1316	1045	1142	1391	920	1109	937	1199	775	968
LSTE-8P418	(1) 50		1416	1128	1231	1496	994	1196	1012	1291	838	1046
LSTE-8P518	(1) 60		1502	1200	1308	1587	1059	1271	1078	1371	894	1113
LSTE-8P618	(1) 60		1571	1271	1378	1656	1131	1342	1150	1441	967	1185
LSTE-8P124	(2) 25		1708	1356	1481	1807	1193	1439	1216	1555	1005	1256
LSTE-8P224	(2) 40		1817	1424	1564	1927	1242	1516	1266	1646	1032	1311
LSTE-8P324	(2) 40		1992	1592	1735	2104	1405	1686	1430	1819	1186	1476
LSTE-8P424	(2) 40		2084	1685	1827	2196	1500	1779	1525	1910	1282	1572
LSTE-8P524	(2) 50		2232	1807	1959	2352	1611	1907	1637	2048	1378	1686
LSTE-8P136	(3) 30		2462	1919	2114	2617	1670	2047	1703	2226	1386	1765
LSTE-8P236	(3) 40		2725	2136	2346	2891	1863	2274	1899	2469	1547	1967
LSTE-8P336	(3) 40		2988	2387	2603	3157	2108	2529	2145	2728	1778	2214
LSTE-8P436	(3) 40		3126	2528	2741	3295	2250	2668	2288	2866	1923	2358
LSTE-8P536	(3) 50		3348	2710	2938	3527	2416	2861	2456	3072	2067	2529

Note: For alternate selections and conditions other than those stated, consult your evap*Select* selection program or local EVAPCO representative.

† Mark Owned by the Cooling Technology Institute.

ENGINEERING DATA & DIMENSIONS

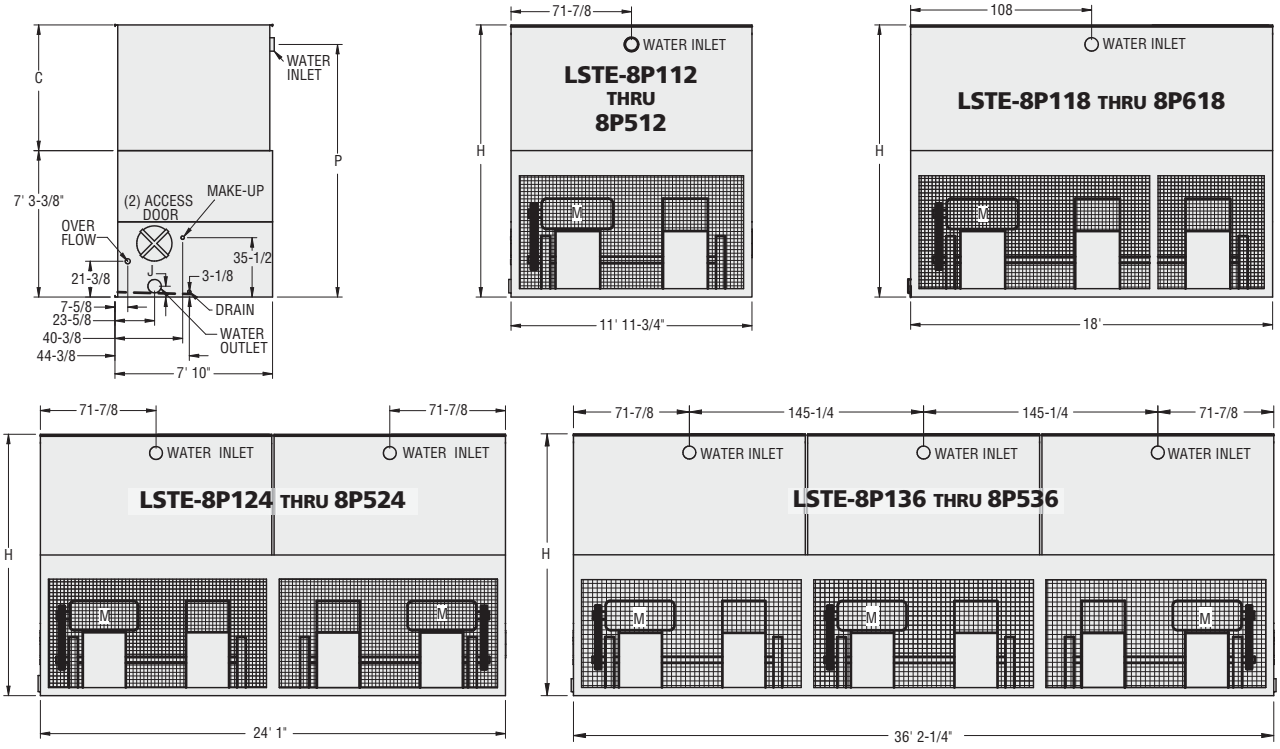

LARGE CENTRIFUGAL FAN MODELS — LSTE-8P112 TO 8P536

MODEL NO.	WEIGHT (LBS.)		NO. FANS	FAN MOTOR HP*	AIR FLOW CFM	DIMENSIONS				CONNECTIONS (IN.)				
	SHIPPING	OPERATING				H	P	C	J	WATER IN	WATER OUT	MAKE UP	DRAIN	OVER FLOW
LSTE-8P112	5,550	9,030	2	30	58,400	12' 6-3/8"	11' 6-3/4"	5' 3"	7"	8	8	2	2	3
LSTE-8P212	5,710	9,190	2	40	63,800	12' 6-3/8"	11' 6-3/4"	5' 3"	7"	8	8	2	2	3
LSTE-8P312	6,050	9,530	2	40	62,100	13' 6-3/8"	12' 6-3/4"	6' 3"	7"	8	8	2	2	3
LSTE-8P412	6,380	9,860	2	40	60,100	14' 6-3/8"	13' 6-3/4"	7' 3"	7"	8	8	2	2	3
LSTE-8P512	6,390	9,870	2	50	64,300	14' 6-3/8"	13' 6-3/4"	7' 3"	7"	8	8	2	2	3
LSTE-8P118	8,180	13,530	3	40	84,800	12' 6-3/8"	11' 6-3/4"	5' 3"	7"	8	8	2	2	3
LSTE-8P218	8,190	13,540	3	50	90,800	12' 6-3/8"	11' 6-3/4"	5' 3"	7"	8	8	2	2	3
LSTE-8P318	8,210	13,560	3	40	82,600	13' 6-3/8"	12' 6-3/4"	6' 3"	7"	8	8	2	2	3
LSTE-8P418	8,220	13,570	3	50	88,500	13' 6-3/8"	12' 6-3/4"	6' 3"	7"	8	8	2	2	3
LSTE-8P518	8,440	13,790	3	60	93,500	13' 6-3/8"	12' 6-3/4"	6' 3"	7"	8	8	2	2	3
LSTE-8P618	9,380	14,730	3	60	90,600	14' 6-3/8"	13' 6-3/4"	7' 3"	7"	8	8	2	2	3
LSTE-8P124	11,470	18,660	4	(2) 25	107,500	13' 6-3/8"	12' 6-3/4"	6' 3"	7-7/8"	(2)8	10	2	2	3
LSTE-8P224	11,210	18,400	4	(2) 40	127,500	12' 6-3/8"	11' 6-3/4"	5' 3"	7-7/8"	(2)8	10	2	2	3
LSTE-8P324	11,890	19,080	4	(2) 40	124,200	13' 6-3/8"	12' 6-3/4"	6' 3"	7-7/8"	(2)8	10	2	2	3
LSTE-8P424	12,550	19,740	4	(2) 40	120,100	14' 6-3/8"	13' 6-3/4"	7' 3"	7-7/8"	(2)8	10	2	2	3
LSTE-8P524	12,570	19,760	4	(2) 50	128,600	14' 6-3/8"	13' 6-3/4"	7' 3"	7-7/8"	(2)8	10	2	2	3
LSTE-8P136	16,710	27,240	6	(3) 30	175,200	12' 6-3/8"	11' 6-3/4"	5' 3"	7"	(3)8	(2)8	(2)2	(2)2	(2)3
LSTE-8P236	17,190	27,720	6	(3) 40	191,300	12' 6-3/8"	11' 6-3/4"	5' 3"	7"	(3)8	(2)8	(2)2	(2)2	(2)3
LSTE-8P336	18,210	28,740	6	(3) 40	186,300	13' 6-3/8"	12' 6-3/4"	6' 3"	7"	(3)8	(2)8	(2)2	(2)2	(2)3
LSTE-8P436	19,200	29,730	6	(3) 40	180,200	14' 6-3/8"	13' 6-3/4"	7' 3"	7"	(3)8	(2)8	(2)2	(2)2	(2)3
LSTE-8P536	19,230	29,760	6	(3) 50	193,000	14' 6-3/8"	13' 6-3/4"	7' 3"	7"	(3)8	(2)8	(2)2	(2)2	(2)3

NOTES:
1. An adequately sized bleed line must be installed in the cooling tower system to prevent build-up of impurities in the recirculated water.
2. Connections smaller than 6" are MPT. Connections 6" or larger are Beveled For Weld/Grooved for mechanical coupling (BFW/Grooved).
3. Do not use catalog drawings for certified prints. Dimensions are subject to change.
* For external static pressure up to 1/2", use next size fan motor.

MODELS LSTE-10112 TO 10636

Thermal performance certified by the Cooling Technology Institute (CTI) in accordance with CTI Standard STD-201 †

To Make a Selection:
Locate the column with the desired operating temperature conditions. Read down the column until you find the GPM equal to or greater than the flow required. Read horizontally to the left to find the model number of the unit that will perform the duty.

		COOLING CAPACITY IN GPM									
		TEMP °F									
		EWT	90°	95°	90°	95°	90°	95°	90°	95°	95°	100°
	MOTOR	LWT	80°	80°	80°	80°	80°	80°	80°	80°	85°	85°
MODEL NO.	HP	WB	66°	66°	68°	68°	70°	70°	72°	72°	75°	75°
LSTE-10112	(1) 30		1246	977	1151	902	1022	809	891	720	1165	921
LSTE-10212	(1) 40		1366	1076	1265	994	1125	894	983	796	1279	1016
LSTE-10312	(1) 40		1425	1135	1323	1054	1183	954	1043	857	1337	1075
LSTE-10412	(1) 50		1466	1159	1358	1071	1210	964	1059	860	1374	1094
LSTE-10512	(1) 50		1525	1217	1417	1130	1268	1025	1118	921	1432	1152
LSTE-10612	(1) 60		1612	1288	1498	1196	1342	1085	1183	976	1514	1220
LSTE-10118	(2) 25		1724	1324	1582	1212	1390	1076	1197	947	1602	1241
LSTE-10218	(2) 30		1836	1415	1689	1297	1485	1154	1281	1016	1710	1328
LSTE-10318	(2) 25		1892	1484	1748	1370	1552	1229	1354	1093	1769	1399
LSTE-10418	(2) 30		2006	1578	1856	1457	1649	1309	1440	1165	1878	1488
LSTE-10518	(2) 30		2094	1667	1943	1548	1738	1401	1531	1258	1965	1579
LSTE-10618	(2) 40		2197	1736	2036	1605	1813	1444	1586	1288	2059	1639
LSTE-10718	(2) 40		2287	1824	2124	1694	1901	1536	1676	1380	2147	1727
LSTE-10124	(2) 40		2505	1936	2306	1777	2031	1581	1754	1392	2335	1818
LSTE-10224	(2) 40		2732	2153	2529	1989	2250	1789	1965	1592	2558	2031
LSTE-10324	(2) 50		2932	2318	2717	2143	2420	1929	2118	1720	2747	2188
LSTE-10424	(2) 50		3050	2434	2833	2261	2536	2049	2236	1842	2865	2305
LSTE-10524	(2) 60		3224	2576	2996	2393	2684	2170	2367	1952	3029	2440
LSTE-10136	(3) 40		3758	2904	3459	2665	3046	2371	2631	2087	3502	2727
LSTE-10236	(3) 40		4099	3229	3794	2983	3375	2683	2948	2388	3837	3047
LSTE-10336	(3) 50		4398	3477	4075	3214	3630	2893	3177	2580	4121	3282
LSTE-10436	(3) 50		4576	3651	4250	3391	3804	3074	3354	2762	4297	3457
LSTE-10536	(3) 60		4836	3864	4494	3589	4025	3254	3550	2928	4543	3660
LSTE-10636	(3) 75		5173	4140	4809	3847	4311	3490	3806	3142	4861	3923

		COOLING CAPACITY IN GPM									
		TEMP °F									
		EWT	95°	100°	95°	97°	100°	102°	95°	97°	100°	102°
	MOTOR	LWT	85°	85°	85°	87°	85°	87°	85°	87°	85°	87°
MODEL NO.	HP	WB	76°	76°	78°	78°	78°	78°	80°	80°	80°	80°
LSTE-10112	(1) 30		1098	873	953	1162	768	926	782	1001	647	808
LSTE-10212	(1) 40		1207	962	1050	1276	849	1021	864	1101	716	893
LSTE-10312	(1) 40		1265	1023	1109	1334	910	1080	925	1160	777	953
LSTE-10412	(1) 50		1298	1038	1131	1370	916	1099	933	1185	774	963
LSTE-10512	(1) 50		1356	1097	1189	1429	977	1158	993	1243	835	1023
LSTE-10612	(1) 60		1434	1161	1259	1511	1035	1226	1052	1316	886	1083
LSTE-10118	(2) 25		1503	1169	1288	1598	1017	1247	1037	1359	844	1075
LSTE-10218	(2) 30		1604	1251	1378	1705	1089	1335	1111	1451	904	1152
LSTE-10318	(2) 25		1668	1325	1447	1764	1167	1406	1188	1519	983	1227
LSTE-10418	(2) 30		1771	1410	1539	1873	1243	1496	1265	1615	1048	1307
LSTE-10518	(2) 30		1859	1502	1629	1960	1335	1586	1358	1704	1140	1399
LSTE-10618	(2) 40		1944	1554	1695	2054	1373	1647	1397	1776	1159	1442
LSTE-10718	(2) 40		2032	1644	1782	2142	1464	1735	1489	1864	1251	1534
LSTE-10124	(2) 40		2194	1714	1885	2328	1493	1827	1523	1985	1239	1578
LSTE-10224	(2) 40		2415	1925	2100	2552	1697	2041	1728	2203	1431	1786
LSTE-10324	(2) 50		2595	2075	2262	2741	1833	2199	1866	2371	1548	1926
LSTE-10424	(2) 50		2712	2193	2378	2858	1954	2315	1987	2487	1670	2046
LSTE-10524	(2) 60		2868	2322	2517	3021	2070	2451	2104	2631	1772	2167
LSTE-10136	(3) 40		3291	2570	2827	3493	2239	2741	2284	2978	1858	2367
LSTE-10236	(3) 40		3622	2887	3150	3828	2546	3062	2593	3304	2147	2679
LSTE-10336	(3) 50		3893	3113	3393	4111	2749	3298	2798	3556	2323	2889
LSTE-10436	(3) 50		4067	3290	3567	4287	2931	3473	2980	3730	2505	3070
LSTE-10536	(3) 60		4302	3483	3776	4532	3105	3677	3156	3947	2658	3250
LSTE-10636	(3) 75		4605	3734	4046	4849	3330	3940	3384	4228	2854	3485

Note: For alternate selections and conditions other than those stated, consult your evap*Select* selection program or local EVAPCO representative.

† Mark Owned by the Cooling Technology Institute.

ENGINEERING DATA & DIMENSIONS

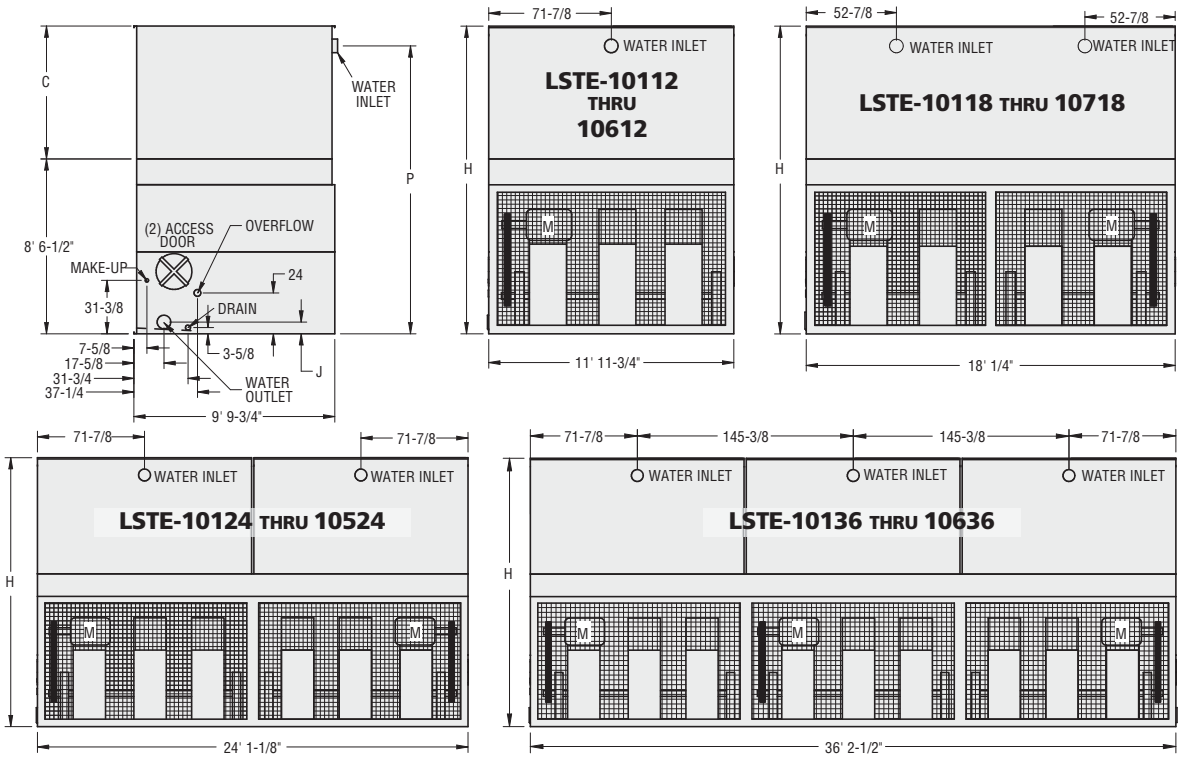

LARGE CENTRIFUGAL FAN MODELS — LSTE-10112 TO 10636

MODEL NO.	WEIGHT (LBS.)		NO. FANS	FAN MOTOR HP*	AIR FLOW CFM	DIMENSIONS				CONNECTIONS (IN.)				
	SHIPPING	OPERATING				H	P	C	J	WATER IN	WATER OUT	MAKE UP	DRAIN	OVER FLOW
LSTE-10112	8,030	13,940	3	30	69,000	15' 3/8"	14' 3/4"	6' 5-7/8"	7-1/4"	8"	8"	2"	3"	4"
LSTE-10212	8,190	14,100	3	40	75,600	15' 3/8"	14' 3/4"	6' 5-7/8"	7-1/4"	8"	8"	2"	3"	4"
LSTE-10312	8,600	14,510	3	40	73,800	16' 3/8"	15' 3/4"	7' 5-7/8"	7-1/4"	8"	8"	2"	3"	4"
LSTE-10412	8,200	14,110	3	50	81,000	15' 3/8"	14' 3/4"	6' 5-7/8"	7-1/4"	8"	8"	2"	3"	4"
LSTE-10512	8,610	14,520	3	50	79,200	16' 3/8"	15' 3/4"	7' 5-7/8"	7-1/4"	8"	8"	2"	3"	4"
LSTE-10612	8,830	14,740	3	60	83,900	16' 3/8"	15' 3/4"	7' 5-7/8"	7-1/4"	8"	8"	2"	3"	4"
LSTE-10118	11,460	20,420	4	(2) 25	110,600	14' 3/8"	13' 3/4"	5' 5-7/8"	8-1/8"	(2)8"	10"	2"	3"	4"
LSTE-10218	11,560	20,520	4	(2) 30	117,100	14' 3/8"	13' 3/4"	5' 5-7/8"	8-1/8"	(2)8"	10"	2"	3"	4"
LSTE-10318	12,080	21,040	4	(2) 25	107,500	15' 3/8"	14' 3/4"	6' 5-7/8"	8-1/8"	(2)8"	10"	2"	3"	4"
LSTE-10418	12,180	21,140	4	(2) 30	113,900	15' 3/8"	14' 3/4"	6' 5-7/8"	8-1/8"	(2)8"	10"	2"	3"	4"
LSTE-10518	12,510	21,770	4	(2) 30	111,300	16' 3/8"	15' 3/4"	7' 5-7/8"	8-1/8"	(2)8"	10"	2"	3"	4"
LSTE-10618	12,500	21,460	4	(2) 40	124,700	15' 3/8"	14' 3/4"	6' 5-7/8"	8-1/8"	(2)8"	10"	2"	3"	4"
LSTE-10718	13,130	22,090	4	(2) 40	121,900	16' 3/8"	15' 3/4"	7' 5-7/8"	8-1/8"	(2)8"	10"	2"	3"	4"
LSTE-10124	15,220	27,400	6	(2) 40	155,400	14' 3/8"	13' 3/4"	5' 5-7/8"	8-1/8"	(2)8"	10"	2"	3"	4"
LSTE-10224	16,040	28,220	6	(2) 40	151,200	15' 3/8"	14' 3/4"	6' 5-7/8"	8-1/8"	(2)8"	10"	2"	3"	4"
LSTE-10324	16,060	28,240	6	(2) 50	162,000	15' 3/8"	14' 3/4"	6' 5-7/8"	8-1/8"	(2)8"	10"	2"	3"	4"
LSTE-10424	16,880	29,060	6	(2) 50	158,400	16' 3/8"	15' 3/4"	7' 5-7/8"	8-1/8"	(2)8"	10"	2"	3"	4"
LSTE-10524	17,310	29,490	6	(2) 60	163,600	16' 3/8"	15' 3/4"	7' 5-7/8"	8-1/8"	(2)8"	10"	2"	3"	4"
LSTE-10136	23,880	41,240	9	(3) 40	233,100	14' 3/8"	13' 3/4"	5' 5-7/8"	8-1/8"	(3)8"	(2)10"	3"	3"	4"
LSTE-10236	25,110	42,470	9	(3) 40	226,800	15' 3/8"	14' 3/4"	6' 5-7/8"	8-1/8"	(3)8"	(2)10"	3"	3"	4"
LSTE-10336	25,140	42,500	9	(3) 50	243,000	15' 3/8"	14' 3/4"	6' 5-7/8"	8-1/8"	(3)8"	(2)10"	3"	3"	4"
LSTE-10436	26,370	43,730	9	(3) 50	237,700	16' 3/8"	15' 3/4"	7' 5-7/8"	8-1/8"	(3)8"	(2)10"	3"	3"	4"
LSTE-10536	27,020	44,380	9	(3) 60	251,800	16' 3/8"	15' 3/4"	7' 5-7/8"	8-1/8"	(3)8"	(2)10"	3"	3"	4"
LSTE-10636	27,320	44,680	9	(3) 75	269,000	16' 3/8"	15' 3/4"	7' 5-7/8"	8-1/8"	(3)8"	(2)10"	3"	3"	4"

NOTES:
1. An adequately sized bleed line must be installed in the cooling tower system to prevent build-up of impurities in the recirculated water.
2. Connections smaller than 6" are MPT. Connections 6" or larger are Beveled For Weld/Grooved for mechanical coupling (BFW/Grooved).
3. Do not use catalog drawings for certified prints. Dimensions are subject to change.

* For external static pressure up to 1/2", use next size fan motor.

MODELS LPT-316 TO 5712

Thermal performance certified by the Cooling Technology Institute (CTI) in accordance with CTI Standard STD-201 †

To Make a Selection:
Locate the column with the desired operating temperature conditions. Read down the column until you find the GPM equal to or greater than the flow required. Read horizontally to the left to find the model number of the unit that will perform the duty.

		COOLING CAPACITY IN GPM									
		TEMP °F									
		EWT	90°	95°	90°	95°	90°	95°	90°	95°	95°	100°
	MOTOR	LWT	80°	80°	80°	80°	80°	80°	80°	80°	85°	85°
MODEL NO.	HP	WB	66°	66°	68°	68°	70°	70°	72°	72°	75°	75°
LPT-316	1.5		110	83	100	76	88	67	75	58	102	77
LPT-326	2		136	104	125	95	109	84	93	73	126	97
LPT-336	3		154	118	142	108	124	96	107	84	143	111
LPT-346	3		171	132	157	121	138	108	119	96	159	124
LPT-356	5		198	153	182	141	161	126	139	111	185	144
LPT-366	7.5		221	173	204	159	181	142	157	126	207	163
LPT-516	3		232	177	213	162	187	144	160	126	216	166
LPT-526	5		272	208	249	191	219	170	189	149	252	196
LPT-536	3		282	222	261	205	232	184	202	165	264	209
LPT-546	5		298	231	274	212	242	189	209	168	278	217
LPT-556	7.5		307	236	282	217	248	193	214	170	286	222
LPT-566	7.5		326	254	301	233	266	208	230	185	305	238
LPT-576	10		355	278	328	255	290	228	252	202	332	261
LPT-586	7.5		363	289	337	267	301	241	264	216	341	273
LPT-596	10		392	313	365	290	326	262	287	235	369	296
LPT-519	10		406	311	372	285	326	253	281	222	377	292
LPT-529	15		459	352	421	323	370	288	319	254	426	331
LPT-539	15		488	379	450	348	397	311	344	276	455	356
LPT-549	20		516	403	477	371	422	331	366	294	483	379
LPT-559	15		539	427	500	396	446	357	391	319	506	404
LPT-569	20		585	467	544	432	487	390	428	349	550	441
LPT-5112	15		542	418	498	384	438	342	379	303	505	392
LPT-5212	20		596	461	548	423	483	378	418	335	555	433
LPT-5312	25		640	497	590	456	521	408	451	361	597	467
LPT-5412	30		678	528	626	485	553	434	479	384	633	496
LPT-5512	25		686	542	636	502	566	452	496	404	643	512
LPT-5612	30		716	568	664	525	592	474	519	423	672	536
LPT-5712	30		757	607	704	564	631	511	558	460	712	575

		COOLING CAPACITY IN GPM									
		TEMP °F									
		EWT	95°	100°	95°	97°	100°	102°	95°	97°	100°	102°
	MOTOR	LWT	85°	85°	85°	87°	85°	87°	85°	87°	85°	87°
MODEL NO.	HP	WB	76°	76°	78°	78°	78°	78°	80°	80°	80°	80°
LPT-316	1.5		95	73	81	102	63	78	64	85	53	67
LPT-326	2		118	91	101	126	79	97	81	107	65	84
LPT-336	3		134	104	115	143	90	111	92	121	74	96
LPT-346	3		149	117	128	159	102	124	104	135	86	108
LPT-356	5		174	136	149	184	119	145	122	157	100	126
LPT-366	7.5		195	154	168	206	135	163	137	177	113	142
LPT-516	3		202	156	173	215	136	167	138	182	112	144
LPT-526	5		237	184	203	252	160	197	164	214	133	170
LPT-536	3		249	198	216	263	175	210	178	227	149	184
LPT-546	5		261	205	225	277	179	218	183	236	150	189
LPT-556	7.5		268	209	230	285	183	223	186	242	151	193
LPT-566	7.5		286	225	247	304	197	240	201	260	165	208
LPT-576	10		313	247	271	331	217	262	221	284	181	228
LPT-586	7.5		323	259	282	340	229	274	233	295	195	241
LPT-596	10		349	281	306	368	249	298	254	320	212	262
LPT-519	10		353	275	302	375	239	293	244	319	198	253
LPT-529	15		400	312	343	425	272	332	278	361	226	288
LPT-539	15		428	336	369	454	295	358	300	388	247	311
LPT-549	20		455	358	392	481	314	381	320	413	263	331
LPT-559	15		478	383	417	504	339	406	345	437	288	356
LPT-569	20		520	419	456	548	372	443	378	477	316	390
LPT-5112	15		473	370	407	503	324	394	331	428	272	342
LPT-5212	20		521	409	449	554	358	435	365	472	300	377
LPT-5312	25		562	441	484	596	386	469	394	509	324	407
LPT-5412	30		596	469	514	631	411	499	419	541	344	433
LPT-5512	25		607	486	529	641	430	515	438	555	365	452
LPT-5612	30		635	509	554	670	451	539	458	580	383	473
LPT-5712	30		674	547	593	710	488	577	496	619	418	510

Note: For alternate selections and conditions other than those stated, consult your evap*Select* selection program or local EVAPCO representative.

† Mark Owned by the Cooling Technology Institute.

ENGINEERING DATA & DIMENSIONS

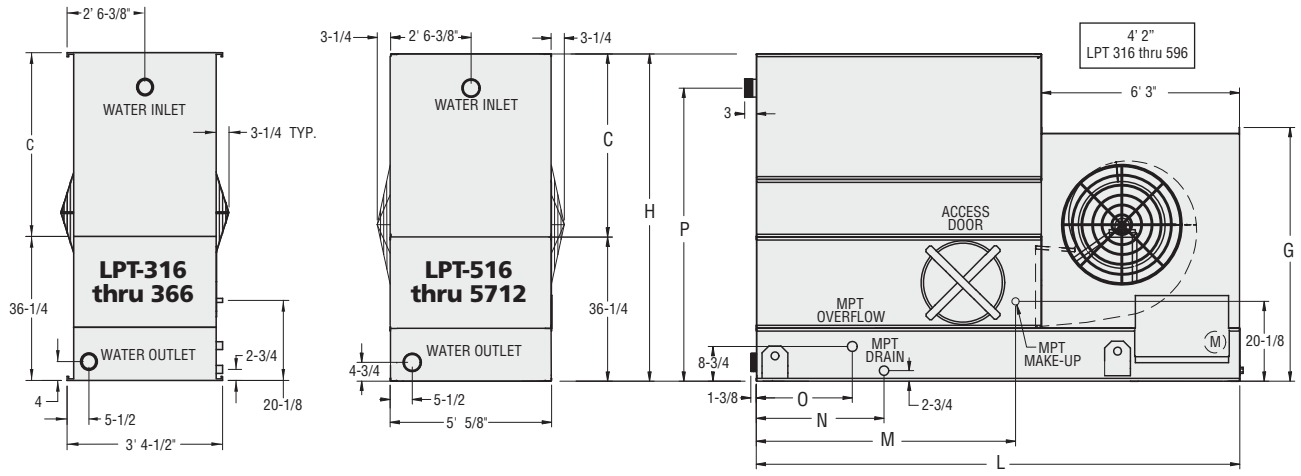

LOW PROFILE COOLING TOWERS

LPT-316 TO 5712

MODEL NO.	WEIGHT (LBS.) SHIPPING	OPERATING	NO. FANS	FAN MOTOR HP*	AIR FLOW CFM	DIMENSIONS H	L	P	C	O	N	M	G	CONNECTIONS (IN.) WATER IN	WATER OUT	MAKE UP	DRAIN	OVER FLOW
LPT-316	1,510	2,490	1	1.5	7,020	6' 10-1/2"	10' 2"	6' 1-7/8"	3' 10-1/4"	2' 1/4"	2' 8-1/4"	5' 6"	5' 3-7/8"	4	4	1	2	2
LPT-326	1,520	2,490	1	2	8,850	6' 10-1/2"	10' 2"	6' 1-7/8"	3' 10-1/4"	2' 1/4"	2' 8-1/4"	5' 6"	5' 3-7/8"	4	4	1	2	2
LPT-336	1,530	2,510	1	3	10,130	6' 10-1/2"	10' 2"	6' 1-7/8"	3' 10-1/4"	2' 1/4"	2' 8-1/4"	5' 6"	5' 3-7/8"	4	4	1	2	2
LPT-346	1,620	2,590	1	3	9,940	6' 10-1/2"	10' 2"	6' 1-7/8"	3' 10-1/4"	2' 1/4"	2' 8-1/4"	5' 6"	5' 3-7/8"	4	4	1	2	2
LPT-356	1,630	2,600	1	5	11,780	6' 10-1/2"	10' 2"	6' 1-7/8"	3' 10-1/4"	2' 1/4"	2' 8-1/4"	5' 6"	5' 3-7/8"	4	4	1	2	2
LPT-366	1,670	2,640	1	7.5	13,490	6' 10-1/2"	10' 2"	6' 1-7/8"	3' 10-1/4"	2' 1/4"	2' 8-1/4"	5' 6"	5' 3-7/8"	4	4	1	2	2
LPT-516	2,320	4,040	1	3	14,880	6' 10-5/8"	12' 3"	6' 1-3/ 4"	3' 10-3/8"	2' 1/4"	2' 9-3/4"	5' 6"	6' 7-3/4"	4	4	1	2	3
LPT-526	2,330	4,050	1	5	17,640	6' 10-5/8"	12' 3"	6' 1-3/4"	3' 10-3/8"	2' 1/4"	2' 9-3/4"	5' 6"	6' 7-3/4"	4	4	1	2	3
LPT-536	2,470	4,190	1	3	14,560	7' 10-5/8"	12' 3"	7' 1-3/4"	4' 10-3/8"	2' 1/4"	2' 9-3/4"	5' 6"	6' 7-3/4"	4	4	1	2	3
LPT-546	2,410	4,130	1	5	17,320	6' 10-5/8"	12' 3"	6' 1-3/4"	3' 10-3/8"	2' 1/4"	2' 9-3/4"	5' 6"	6' 7-3/4"	4	4	1	2	3
LPT-556	2,370	4,100	1	7.5	20,210	6' 10-5/8"	12' 3"	6' 1-3/4"	3' 10-3/8"	2' 1/4"	2' 9-3/4"	5' 6"	6' 7-3/4"	4	4	1	2	3
LPT-566	2,400	4,120	1	7.5	19,960	6' 10-5/8"	12' 3"	6' 1-3/4"	3' 10-3/8"	2' 1/4"	2' 9-3/4"	5' 6"	6' 7-3/4"	4	4	1	2	3
LPT-576	2,480	4,210	1	10	21,300	6' 10-5/8"	12' 3"	6' 1-3/4"	3' 10-3/8"	2' 1/4"	2' 9-3/4"	5' 6"	6' 7-3/4"	4	4	1	2	3
LPT-586	2,520	4,240	1	7.5	19,750	7' 10-5/8"	12' 3"	7' 1-3/4"	4' 10-3/8"	2' 1/4"	2' 9-3/4"	5' 6"	6' 7-3/4"	4	4	1	2	3
LPT-596	2,560	4,280	1	10	21,300	7' 10-5/8"	12' 3"	7' 1-3/4"	4' 10-3/8"	2' 1/4"	2' 9-3/4"	5' 6"	6' 7-3/4"	4	4	1	2	3
LPT-519	2,820	5,430	1	10	26,470	7' 5/8"	15' 2-3/8"	6' 2-7/8"	4' 3/8"	4' 11-5/8"	5' 7-1/8"	8' 5-3/8"	6' 7-3/4"	6	6	1	2	3
LPT-529	2,930	5,530	1	15	30,290	7' 5/8"	15' 2-3/8"	6' 2-7/8"	4' 3/8"	4' 11-5/8"	5' 7-1/8"	8' 5-3/8"	6' 7-3/4"	6	6	1	2	3
LPT-539	2,990	5,590	1	15	29,960	7' 5/8"	15' 2-3/8"	6' 2-7/8"	4' 3/8"	4' 11-5/8"	5' 7-1/8"	8' 5-3/8"	6' 7-3/4"	6	6	1	2	3
LPT-549	3,000	5,600	1	20	32,110	7' 5/8"	15' 2-3/8"	6' 2-7/8"	4' 3/8"	4' 11-5/8"	5' 7-1/8"	8' 5-3/8"	6' 7-3/4"	6	6	1	2	3
LPT-559	3,170	5,770	1	15	29,590	8' 5/8"	15' 2-3/8"	7' 2-7/8"	5' 3/8"	4' 11-5/8"	5' 7-1/8"	8' 5-3/8"	6' 7-3/4"	6	6	1	2	3
LPT-569	3,240	5,830	1	20	32,110	8' 5/8"	15' 2-3/8"	7' 2-7/8"	5' 3/8"	4' 11-5/8"	5' 7-1/8"	8' 5-3/8"	6' 7-3/4"	6	6	1	2	3
LPT-5112	3,440	6,990	1	15	32,190	7' 5/8"	18' 2-3/4"	6' 2-7/8"	4' 3/8"	8'	8' 7-1/2"	11' 5-3/4"	6' 7-3/4"	6	6	1	2	3
LPT-5212	3,450	7,010	1	20	35,460	7' 5/8"	18' 2-3/4"	6' 2-7/8"	4' 3/8"	8'	8' 7-1/2"	11' 5-3/4"	6' 7-3/4"	6	6	1	2	3
LPT-5312	3,460	7,020	1	25	38,170	7' 5/8"	18' 2-3/4"	6' 2-7/8"	4' 3/8"	8'	8' 7-1/2"	11' 5-3/4"	6' 7-3/4"	6	6	1	2	3
LPT-5412	3,490	7,040	1	30	40,550	7' 5/8"	18' 2-3/4"	6' 2-7/8"	4' 3/8"	8'	8' 7-1/2"	11' 5-3/4"	6' 7-3/4"	6	6	1	2	3
LPT-5512	3,700	7,250	1	25	37,890	8' 5/8"	18' 2-3/4"	7' 2-7/8"	5' 3/8"	8'	8' 7-1/2"	11' 5-3/4"	6' 7-3/4"	6	6	1	2	3
LPT-5612	3,720	7,270	1	30	40,280	8' 5/8"	18' 2-3/4"	7' 2-7/8"	5' 3/8"	8'	8' 7-1/2"	11' 5-3/4"	6' 7-3/4"	6	6	1	2	3
LPT-5712	3,980	7,520	1	30	40,110	9' 5/8"	18' 2-3/4"	8' 2-7/8"	6' 3/8"	8'	8' 7-1/2"	11' 5-3/4"	6' 7-3/4"	6	6	1	2	3

Notes:
1) An adequately sized bleed line must be installed in the cooling tower system to prevent buildup of impurities in the recirculated water.
2) Connections smaller than 6" are MPT. Connections 6" or larger are Beveled For Weld/Grooved for mechanical coupling (BFW/Grooved).
3) Do not use catalog drawings for certified prints. Dimensions subject to change.
4) For external static pressure up to 1/2", use next size fan motor.
* One fan motor per unit.

MODELS LPT-819 TO 8812

Thermal performance certified by the Cooling Technology Institute (CTI) in accordance with CTI Standard STD-201 †

To Make a Selection:
Locate the column with the desired operating temperature conditions. Read down the column until you find the GPM equal to or greater than the flow required. Read horizontally to the left to find the model number of the unit that will perform the duty.

		COOLING CAPACITY IN GPM									
		TEMP °F									
		EWT	90°	95°	90°	95°	90°	95°	90°	95°	95°	100°
	MOTOR	LWT	80°	80°	80°	80°	80°	80°	80°	80°	85°	85°
MODEL NO.	HP	WB	66°	66°	68°	68°	70°	70°	72°	72°	75°	75°
LPT-819	20		725	556	665	511	584	455	504	401	673	522
LPT-829	15		751	583	692	535	610	478	529	423	700	547
LPT-839	20		772	599	711	551	628	492	544	436	720	563
LPT-849	15		801	633	742	586	661	528	579	472	751	598
LPT-859	25		819	639	756	588	669	526	581	466	765	601
LPT-869	30		844	660	780	608	691	543	600	482	790	621
LPT-879	25		885	704	822	652	734	588	644	526	831	665
LPT-8112	25		925	715	851	656	749	586	648	519	862	671
LPT-8212	30		999	774	920	711	811	635	703	563	931	727
LPT-8312	40		1053	818	971	752	857	672	743	596	983	769
LPT-8412	30		1064	840	986	777	878	700	768	626	997	794
LPT-8512	50		1129	883	1043	812	924	726	802	643	1056	830
LPT-8612	40		1163	923	1079	854	963	771	845	689	1091	872
LPT-8712	50		1239	987	1151	915	1030	826	905	739	1164	934
LPT-8812	50		1273	1020	1184	949	1062	861	939	775	1196	968

		COOLING CAPACITY IN GPM									
		TEMP °F									
		EWT	95°	100°	95°	97°	100°	102°	95°	97°	100°	102°
	MOTOR	LWT	85°	85°	85°	87°	85°	87°	85°	87°	85°	87°
MODEL NO.	HP	WB	76°	76°	78°	78°	78°	78°	80°	80°	80°	80°
LPT-819	20		631	493	542	672	430	525	439	571	357	455
LPT-829	15		659	517	567	699	453	550	462	597	380	477
LPT-839	20		677	532	584	718	466	566	475	614	391	491
LPT-849	15		709	567	618	749	502	601	511	648	426	527
LPT-859	25		721	568	622	763	498	604	507	655	417	525
LPT-869	30		744	587	643	788	515	624	525	676	432	542
LPT-879	25		786	631	687	829	559	668	569	720	475	587
LPT-8112	25		809	634	696	859	555	674	565	732	465	585
LPT-8212	30		876	687	754	929	602	731	613	794	504	634
LPT-8312	40		924	727	797	980	637	773	649	838	534	671
LPT-8412	30		941	753	820	994	666	798	678	860	566	699
LPT-8512	50		995	785	860	1053	688	834	701	904	577	725
LPT-8612	40		1032	828	901	1088	733	876	746	944	623	770
LPT-8712	50		1102	887	964	1161	786	938	800	1009	668	825
LPT-8812	50		1134	921	998	1194	822	972	835	1042	705	860

Note: For alternate selections and conditions other than those stated, consult your evap*Select* selection program or local EVAPCO representative.

† Mark Owned by the Cooling Technology Institute.

ENGINEERING DATA & DIMENSIONS

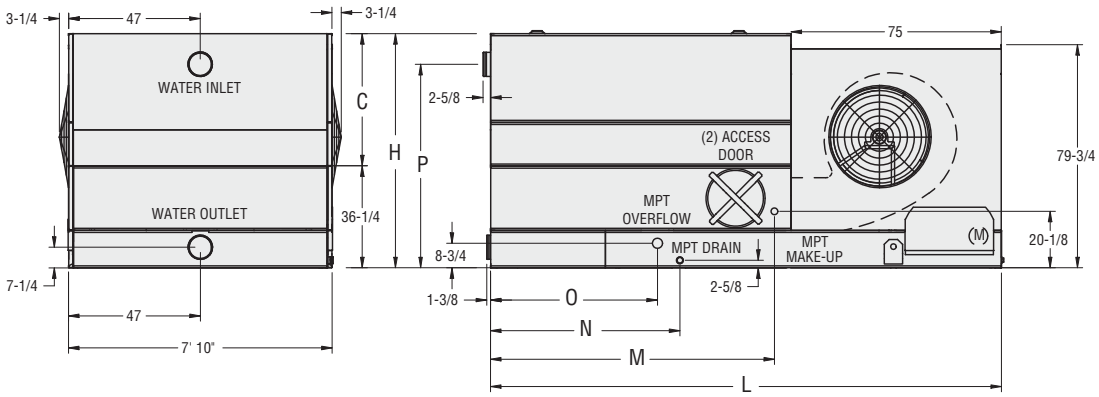

LOW PROFILE COOLING TOWERS

LPT-819 TO 8812

MODEL NO.	WEIGHT (LBS.)		NO. FANS	FAN MOTOR HP*	AIR FLOW CFM	DIMENSIONS							CONNECTIONS (IN.)				
	SHIPPING	OPERATING				H	L	P	C	O	N	M	WATER IN	WATER OUT	MAKE UP	DRAIN	OVER FLOW
LPT-819	4,220	7,620	2	20	49,270	6' 11-1/2"	15' 2-3/8"	6' 5/8"	3' 11-1/4"	4' 11-5/8"	5' 7-5/8"	8' 5-3/8"	8	8	1	2	3
LPT-829	4,290	7,690	2	15	41,610	6' 11-1/2"	15' 2-3/8"	6' 5/8"	3' 11-1/4"	4' 11-5/8"	5' 7-5/8"	8' 5-3/8"	8	8	1	2	3
LPT-839	4,220	7,620	2	20	46,850	6' 11-1/2"	15' 2-3/8"	6' 5/8"	3' 11-1/4"	4' 11-5/8"	5' 7-5/8"	8' 5-3/8"	8	8	1	2	3
LPT-849	4,460	7,860	2	15	41,020	7' 11-1/2"	15' 2-3/8"	7' 5/8"	4' 11-1/4"	4' 11-5/8"	5' 7-5/8"	8' 5-3/8"	8	8	1	2	3
LPT-859	4,320	7,720	2	25	49,340	6' 11-1/2"	15' 2-3/8"	6' 5/8"	3' 11-1/4"	4' 11-5/8"	5' 7-5/8"	8' 5-3/8"	8	8	1	2	3
LPT-869	4,340	7,740	2	30	51,110	6' 11-1/2"	15' 2-3/8"	6' 5/8"	3' 11-1/4"	4' 11-5/8"	5' 7-5/8"	8' 5-3/8"	8	8	1	2	3
LPT-879	4,490	7,890	2	25	48,680	7' 11-1/2"	15' 2-3/8"	7' 5/8"	4' 11-1/4"	4' 11-5/8"	5' 7-5/8"	8' 5-3/8"	8	8	1	2	3
LPT-8112	4,760	9,490	2	25	57,240	6' 11-1/2"	18' 2-3/4"	6' 5/8"	3' 11-1/4"	8'	8' 7"	11' 5-3/4"	8	8	2	2	3
LPT-8212	4,830	9,550	2	30	59,530	6' 11-1/2"	18' 2-3/4"	6' 5/8"	3' 11-1/4"	8'	8' 7"	11' 5-3/4"	8	8	2	2	3
LPT-8312	5,080	9,800	2	40	66,940	6' 11-1/2"	18' 2-3/4"	6' 5/8"	3' 11-1/4"	8'	8' 7"	11' 5-3/4"	8	8	2	2	3
LPT-8412	5,110	9,840	2	30	58,650	7' 11-1/2"	18' 2-3/4"	7' 5/8"	4' 11-1/4"	8'	8' 7"	11' 5-3/4"	8	8	2	2	3
LPT-8512	5,190	9,910	2	50	68,790	6' 11-1/2"	18' 2-3/4"	6' 5/8"	3' 11-1/4"	8'	8' 7"	11' 5-3/4"	8	8	2	2	3
LPT-8612	5,410	10,130	2	40	64,560	7' 11-1/2"	18' 2-3/4"	7' 5/8"	4' 11-1/4"	8'	8' 7"	11' 5-3/4"	8	8	2	2	3
LPT-8712	5,520	10,240	2	50	68,790	7' 11-1/2"	18' 2-3/4"	7' 5/8"	4' 11-1/4"	8'	8' 7"	11' 5-3/4"	8	8	2	2	3
LPT-8812	5,840	10,550	2	50	68,700	8' 11-1/2"	18' 2-3/4"	8' 5/8"	5' 11-1/4"	8'	8' 7"	11' 5-3/4"	8	8	2	2	3

Notes:
1) An adequately sized bleed line must be installed in the cooling tower system to prevent buildup of impurities in the recirculated water.
2) Connections smaller than 6" are MPT. Connections 6" or larger are Beveled For Weld/Grooved for mechanical coupling (BFW/Grooved).
3) Do not use catalog drawings for certified prints. Dimensions subject to change.
4) For external static pressure up to 1/2", use next size fan motor.
* One fan motor per unit.

EVAPCO PRODUCTS ARE MANUFACTURED WORLDWIDE.



EVAPCO, Inc. — World Headquarters & Research/Development Center

EVAPCO, Inc. • P.O. Box 1300 • Westminster, MD 21158 USA
PHONE: 410-756-2600 • FAX: 410-756-6450 • E-MAIL: marketing@evapco.com

EVAPCO North America

EVAPCO, Inc.
World Headquarters
P.O. Box 1300
Westminster, MD 21158 USA
Phone: 410-756-2600
Fax: 410-756-6450
E-mail: marketing@evapco.com

EVAPCO East
5151 Allendale Lane
Taneytown, MD 21787 USA
Phone: 410-756-2600
Fax: 410-756-6450
E-mail: marketing@evapco.com

EVAPCO Midwest
1723 York Road
Greenup, IL 62428 USA
Phone: 217-923-3431
Fax: 217-923-3300
E-mail: evapcomw@evapcomw.com

EVAPCO West
1900 West Almond Avenue
Madera, CA 93637 USA
Phone: 559-673-2207
Fax: 559-673-2378
E-mail: contact@evapcowest.com

EVAPCO Iowa
925 Quality Drive
Lake View, IA 51450 USA
Phone: 712-657-3223
Fax: 712-657-3226

EVAPCO Iowa
Sales & Engineering
215 1st Street, NE
P.O. Box 88
Medford, MN 55049 USA
Phone: 507-446-8005
Fax: 507-446-8239
E-mail: evapcomn@evapcomn.com

EVAPCO Newton
701 East Jourdan Street
Newton, IL 62448 USA
Phone: 618-783-3433
Fax: 618-783-3499
E-mail: evapcomw@evapcomw.com

EVAPCO-BLCT Dry Cooling, Inc.
981 US Highway 22 West
Bridgewater, New Jersey 08807 USA
Phone: 1-908-379-2665
E-mail: info@evapco-blct.com

Refrigeration Valves &
Systems Corporation
A wholly owned subsidiary of EVAPCO, Inc.
1520 Crosswind Dr.
Bryan, TX 77808 USA
Phone: 979-778-0095
Fax: 979-778-0030
E-mail: rvs@rvscorp.com

McCormack Coil Company, Inc.
A wholly owned subsidiary of EVAPCO, Inc.
P.O. Box 1727
6333 S.W. Lakeview Boulevard
Lake Oswego, OR 97035 USA
Phone: 503-639-2137
Fax: 503-639-1800
E-mail: mail@mmccoil.com

EvapTech, Inc.
A wholly owned subsidiary of EVAPCO, Inc.
8331 Nieman Road
Lenexa, KS 66214 USA
Phone: 913-322-5165
Fax: 913-322-5166
E-mail: marketing@evaptech.com

Tower Components, Inc.
A wholly owned subsidiary of EVAPCO, Inc.
5960 US HWY 64E
Ramseur, NC 27316
Phone: 336-824-2102
Fax: 336-824-2190
E-mail: mail@towercomponentsinc.com

EVAPCO Europe

EVAPCO Europe, N.V.
European Headquarters
Industrieterrein Oost 4010
3700 Tongeren, Belgium
Phone: (32) 12-395029
Fax: (32) 12-238527
E-mail: evapco.europe@evapco.be

EVAPCO Europe, S.r.l.
Via Ciro Menotti 10
I-20017 Passirana di Rho
Milan, Italy
Phone: (39) 02-939-9041
Fax: (39) 02-935-00840
E-mail: evapcoeurope@evapco.it

EVAPCO Europe, S.r.l.
Via Dosso 2
23020 Piateda Sondrio, Italy

EVAPCO Europe, GmbH
Bovert 22
D-40670 Meerbusch, Germany
Phone: (49) 2159-69560
Fax: (49) 2159-695611
E-mail: info@evapco.de

Flex coil a/s
A wholly owned subsidiary of EVAPCO, Inc.
Knøsgårdvej 115
DK-9440 Aabybro Denmark
Phone: (45) 9824 4999
Fax: (45) 9824 4990
E-mail: info@flexcoil.dk

EVAPCO S.A. (Pty.) Ltd.
A licensed manufacturer of EVAPCO, Inc.
18 Quality Road
Isando 1600
Republic of South Africa
Phone: (27) 11-392-6630
Fax: (27) 11-392-6615
E-mail: evapco@evapco.co.za

Evap Egypt Engineering Industries Co.
A licensed manufacturer of EVAPCO, Inc.
5 El Nasr Road
Nasr City, Cairo, Egypt
Phone: 2 02 24022866/2 02 24044997
Fax: 2 02 24044667/2 02 24044668
E-mail: Primacool@link.net / Shady@primacool.net

EVAPCO Asia/Pacific

EVAPCO Asia/Pacific Headquarters
1159 Luoning Rd. Baoshan Industrial Zone
Shanghai, P. R. China, Postal Code: 200949
Phone: (86) 21-6687-7786
Fax: (86) 21-6687-7008
E-mail: marketing@evapcochina.com

EVAPCO (Shanghai) Refrigeration
Equipment Co., Ltd.
1159 Louning Rd., Baoshan Industrial Zone
Shanghai, P.R. China, Postal Code: 200949
Phone: (86) 21-6687-7786
Fax: (86) 21-6687-7008
E-mail: marketing@evapcochina.com

Beijing EVAPCO Refrigeration
Equipment Co., Ltd.
Yan Qi Industrial Development District
Huai Rou County
Beijing, P.R. China, Postal Code: 101407
Phone: (86) 10 6166-7238
Fax: (86) 10 6166-7395
E-mail: evapcobj@evapcochina.com

EVAPCO Australia (Pty.) Ltd.
34-42 Melbourne Road
P.O. Box 436
Riverstone, N.S.W. Australia 2765
Phone: (61) 2 9627-3322
Fax: (61) 2 9627-1715
E-mail: sales@evapco.com.au

EVAPCO Composites SDN.BHD
No. 70 (Lot 1289) Jalan Industri 2/3
Rawang Integrated Industrial Park
Rawang, Selangor, 48000 Malaysia
Phone: 60 3 6092-2209
Fax: 60 3 6092-2210

EvapTech Asia Pacific Sdn. Bhd
A wholly owned subsidiary of EvapTech, Inc.
IOI Business Park, 2/F Unit 20
Persiaran Puchong Jaya Selatan
Bandar Puchong Jaya,
47170 Puchong, Selangor, Malaysia
Phone: (60-3) 8070-7255
Fax: (60-3) 8070-5731
E-mail: marketing-ap@evaptech.com

Visit **EVAPCO's** Website at: **http://www.evapco.com**

EVAPCO...SPECIALISTS IN HEAT TRANSFER PRODUCTS AND SERVICES.

Bulletin 313D

DGD/4-12

Mixed Sources
Product group from well-managed forests, controlled sources and recycled wood or fiber
www.fsc.org Cert no. BV-COC-080211
© 1996 Forest Stewardship Council

Scan this QR code to learn more about EVAPCO Cooling Towers.