Series SG & FTV

ARMSTRONG

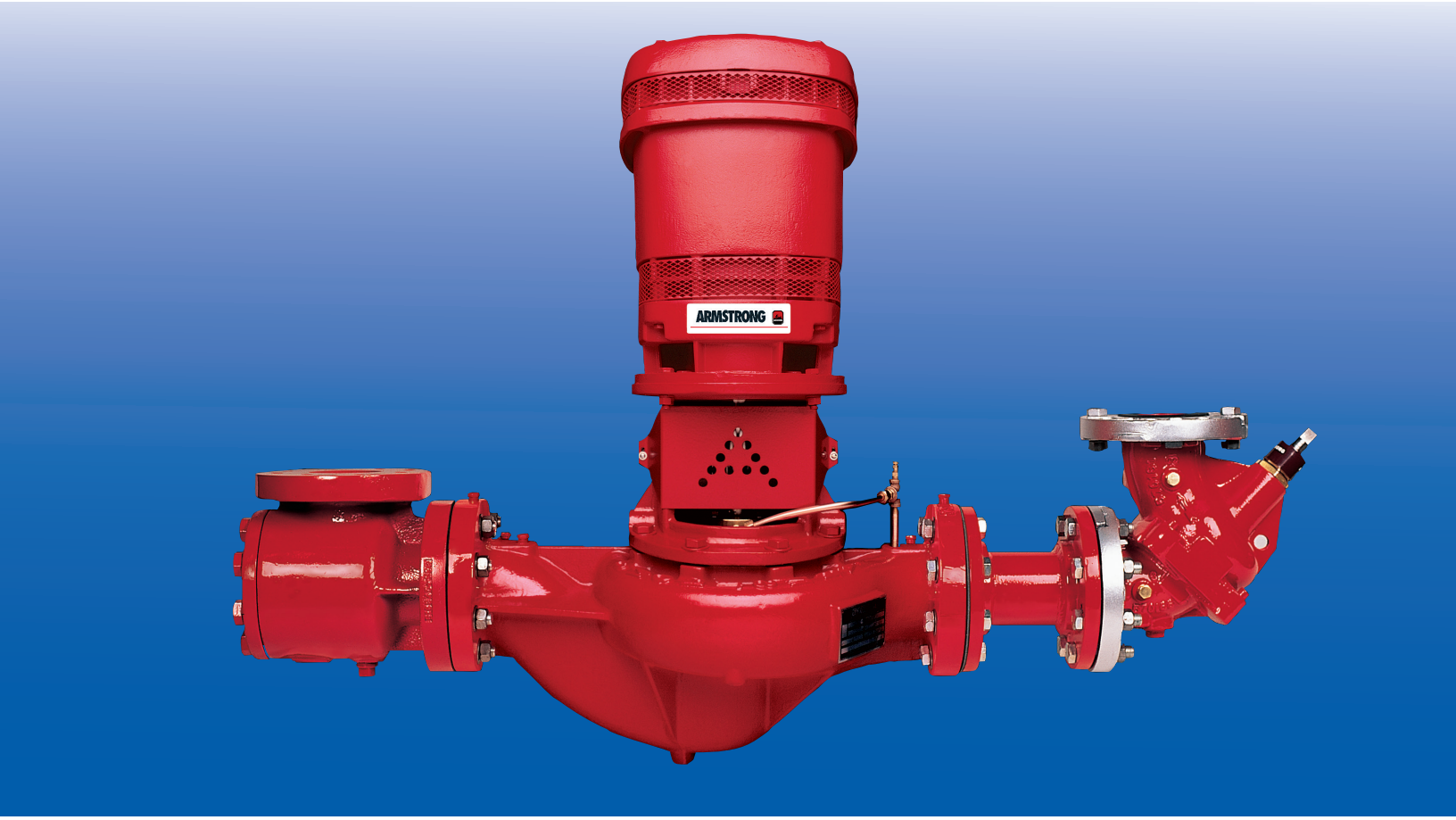

Suction Guides & Flo-Trex Valves

File no:	35.11
Date:	XXX XX, 2016
Supersedes:	35.11
Date:	JANUARY 13, 2016

Suction Guides

Designed for direct mounting on the suction flange of horizontal and vertical pumps.

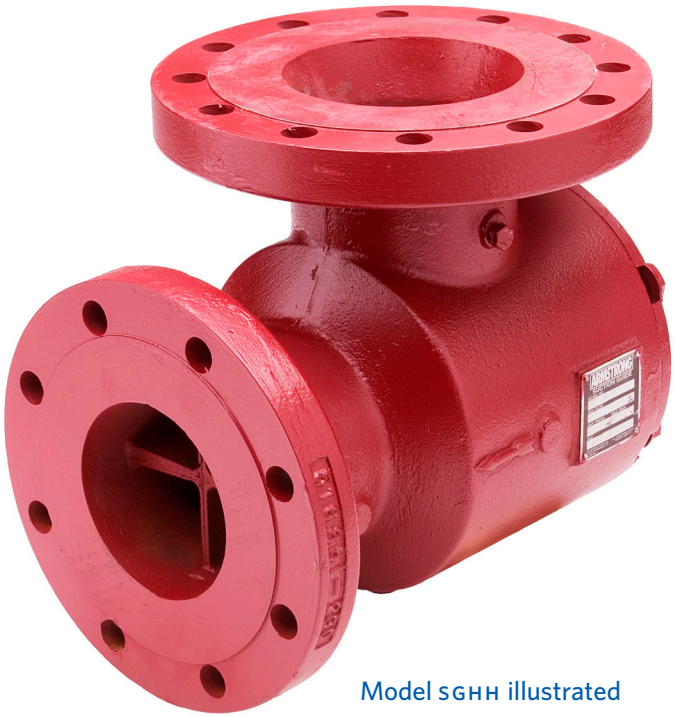

Model SGHH illustrated

Armstrong Suction Guides (SGs) are installed on the suction side of pumps to protect against damage from debris and foreign matter, and optimize flow efficiency. Most installations require a long radius elbow, flow-straightening entrance pipe, and Y strainer - the Suction Guide's versatile 4-function design saves space and installation costs by incorporating all these devices into a single solution.

▶Model SG, SG-TF, SGG, SGHH, SGH-TF Suction Guides

4-function pump fitting

▶ 90° Elbow

Mounting the Suction Guide on any pump suction turns the piping 90°, replacing an elbow. In addition, the Suction Guide can be rotated to any position allowed by the pump suction bolts, from vertical to horizontal.

▶ In-Line Strainer

The stainless steel strainer has free area of at least 250% of pipe sectional area. A disposable fine-mesh strainer is installed for start-up cleaning.

▶ Reducing Elbow

The Suction Guide connects same size piping to the pump suction, but can also connect to inlet piping one size larger than the pump suction, eliminating a reducing elbow.

▶ Guide Vanes

Flow stabilizing vanes on the outlet allow the Suction Guide to bolt directly to the pump, saving the space and cost of a long straight pipe length.

Flo-Trex Valves

Designed for installation on the discharge side of centrifugal pumps.

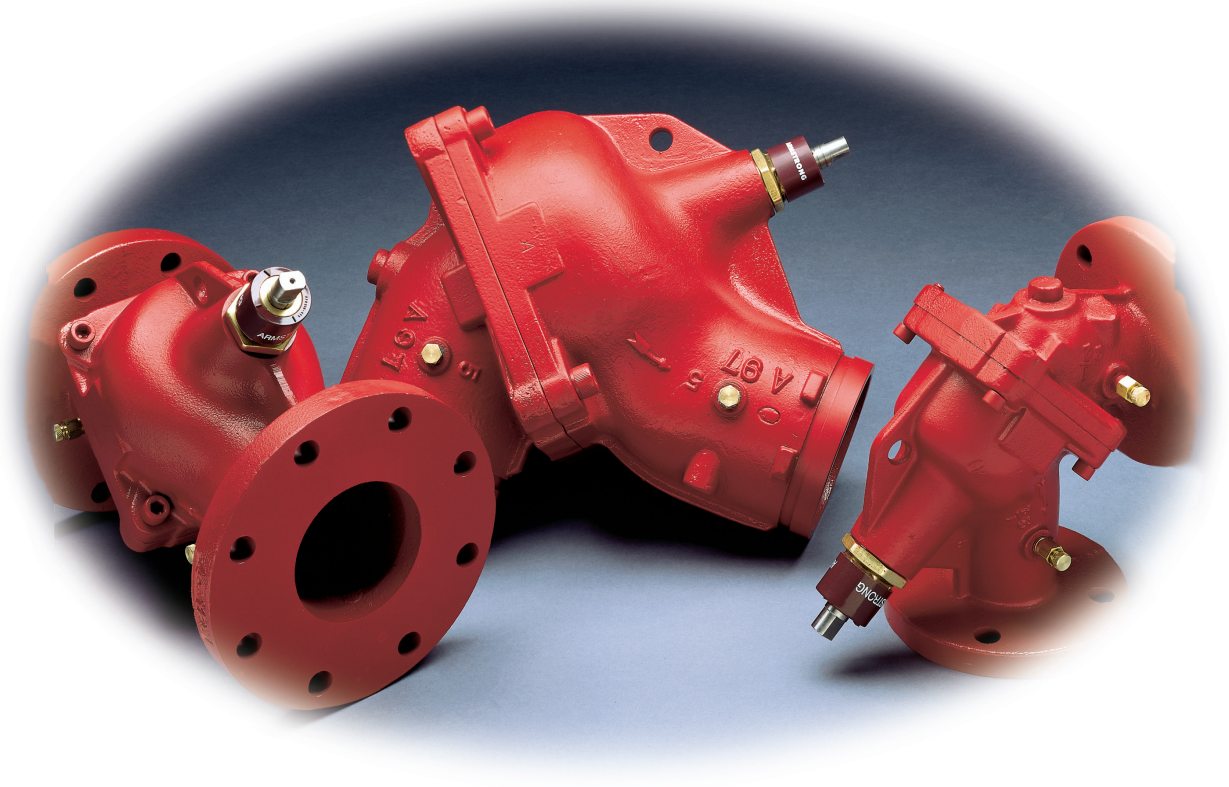

To protect pumps from damage and keep them operating at peak efficiency, Armstrong Flo-Trex Valves (FTVs) are used on the discharge side of pumping equipment. The Flo-Trex Valve can act as a shut-off valve, non-slam check valve, flow throttling valve and 90 degree elbow - all in a single device.

▸Model FTV Flo-Trex Valves

▸ Drip-tight Shut Off Valve

The Armstrong Flo-Trex valve is designed and tested for drip-tight isolation at 150% of maximum working pressure.

▸ Non-slam Check Valve

The Armstrong Flo-Trex valve incorporates a spring closure design that closes the valve in a controlled manner, protecting the valve from slamming due to a reversal in flow caused by gravity or recirculation from a parallel pump.

▸ Flow Throttling Valve

The Armstrong Flo-Trex valve uses a plug and disc design which is the most effective valve type for combining throttling of flow and isolation. Other design valves may be effective for throttling or isolation, but not both.

▸ Convertible Body Design for sizes 2.5" and up

The Armstrong Flo-Trex convertible body design permits the valve to be changed on-site from straight to angle configuration.

Armstrong Suction Guides and Flo-Trex Valves...

Armstrong Method

- Fewer components required as redundant fittings are eliminated.
- Fewer connections required with Armstrong's multi-purpose fittings.
- Less installation time required by reducing the number of fittings.
- Less installation space required as pump inlet spool piece is eliminated.

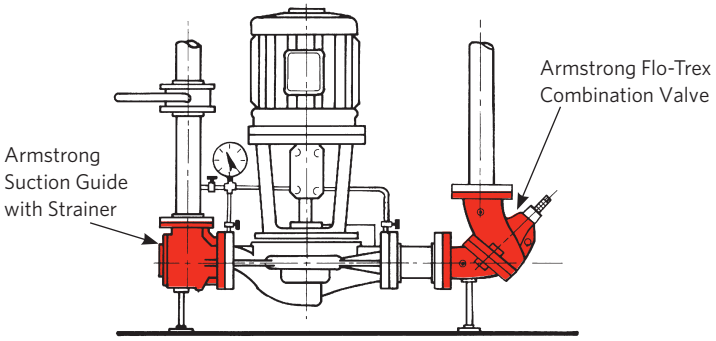

Vertical In-Line Pump

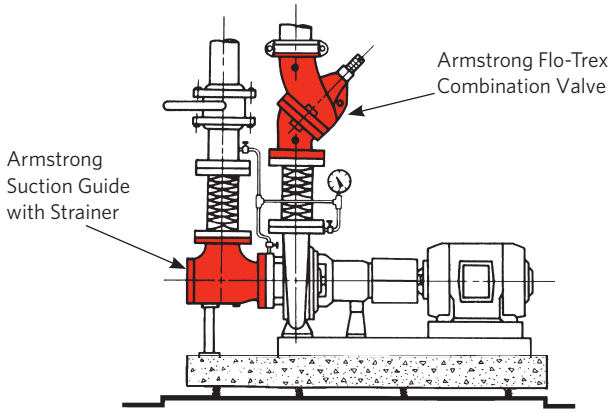

Base Mounted Single Suction Pump

The Smart Choice

An Armstrong Vertical In-Line Pump installation requires the fewest components and connections, maximizing savings and minimizing installation time.

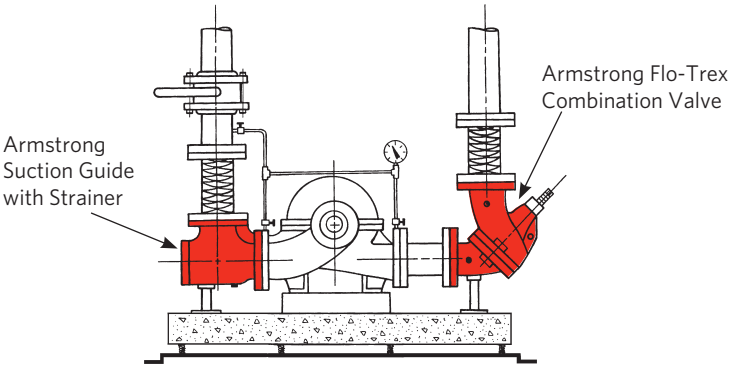

Base Mounted Double Suction Pump

Reduce Field Installation and Materials Costs

Conventional Method

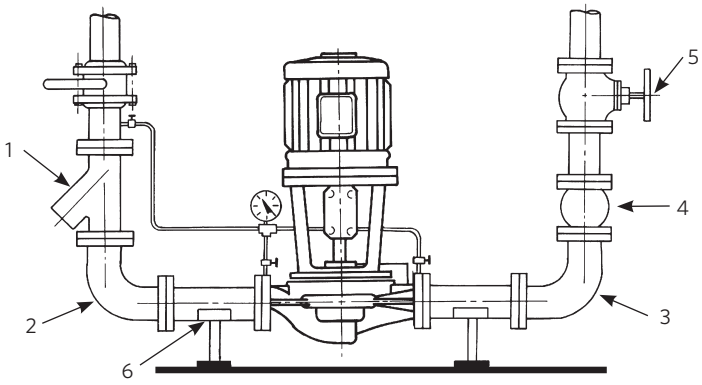

Vertical In-Line Pump

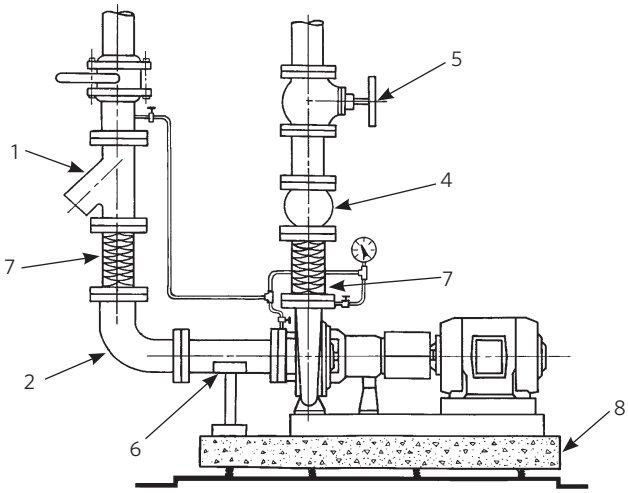

Base Mounted Single Suction Pump

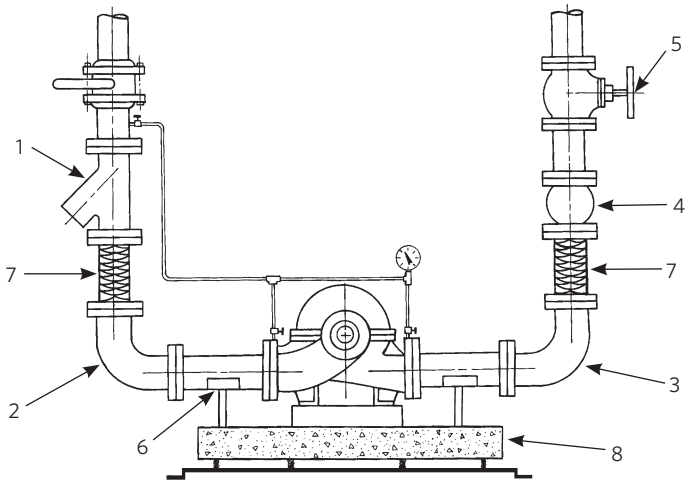

Base Mounted Double Suction Pump

Components eliminated using Armstrong Flo-Trex Valves and Suction Guide strainer for base mounted single and double suction pump installations and Vertical In-Line installations:

1 Y Strainer
2 Suction long radius elbow
3 Discharge long radius elbow
4 Discharge check valve
5 Discharge globe valve
6 Suction spool piece

In addition, use of the FTV-G style eliminates three welded flange connections.

Additional components eliminated using Armstrong Vertical In-Line pumps with Flo-Trex Valves and Suction Guide strainers in place of base mounted applications:

7 Flexible connectors
8 Inertia base isolation
9 Field shaft alignment (not shown)

▶Materials of Construction

▶Suction Guides

MODEL	BODY	COVER	STRAINER ELEMENT	FINE-MESH STRAINER	GUIDE VANES
SG-TF (threaded inlet up to 2")	Ductile Iron	Ductile Iron	Stainless Steel	Galvanized Steel	Ductile Iron
SG (flanged up to 12")	Cast Iron	Cast Iron	Stainless Steel	Galvanized Steel	Cast iron
SG (14" & larger)	Carbon Steel	Carbon Steel	Stainless Steel	Galvanized Steel	Carbon Steel
SGG, SGHH	Ductile Iron	Ductile Iron	Stainless Steel	Galvanized Steel	Ductile Iron

▶Flo-Trex Valves

MODEL	BODY	DISC	STEM & SPRING	SEAT & O-RING	PORT FITTING
FTV-TS, FTV- GS	Stainless Steel	Brass	Brass stem, ss spring	EPDM	Brass
FTV-F (2.5" to 12") ANSI-125/PN16	Cast Iron	Bronze	Stainless Steel	EPDM	Brass
FTV-FS (14" & larger) ANSI-125/PN16	Cast Iron	Carbon Steel/ EPDM	Stainless Steel	Bronze/ EPDM	Brass
FTV-HF ANSI-250/PN25	Ductile Iron	Bronze	Stainless Steel	EPDM	Brass
FTV-G	Ductile Iron	Bronze	Stainless Steel	EPDM	Brass

▶Maximum Operating Parameters

Suction Guide & Flo-Trex Pressure/Temperature Parameters

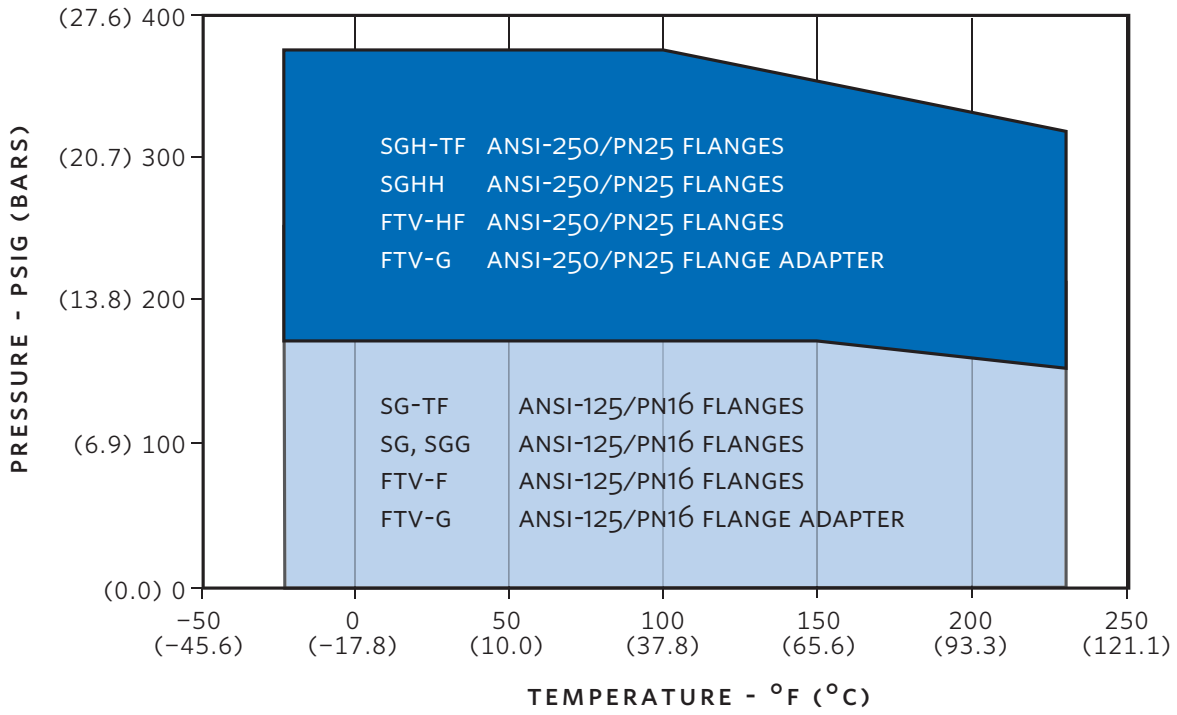

MAX OPERATING CONDITIONS	ANSI 125	ANSI 250
	175 psig at 140°F (12 bars at 60°C)	375 psig at 100°F (26 bars at 38°C)
	130 psig at 230°F (9 bars at 110°C)	300 psig at 230°F (21 bars at 110°C)

NOTE:

- Pressure/Temperature parameters not shown for SG & FTV models 14" and larger, and for FTVs smaller than 2.5". Please refer to submittal data for those models
- Units are hydrostatically tested to 150% of maximum working pressure.

▶Design Benefits

Suction Guide

- ▸ Suction guide body made of cast iron, ductile iron, or carbon steel, with ANSI or DIN flanges. Same size ports are available with oversized inlet flange to eliminate reducer. Threaded inlet available to 2"(50mm)
- ▸ Guide vanes reduce turbulence, thereby creating optimum flow conditions and minimizing stress on pump components.
- ▸ Strainer with ⅛" (3 mm) perforated stainless steel. Star-shaped for added strength and designed to provide large free flow area to reduce pressure drop.
- ▸ Removable fine mesh start-up strainer, furnished as a standard item, helps prevent mechanical seal or instrument damage during initial run period.
- ▸ Optional magnet to help eliminate free floating metallic particles from system.
- ▸ Removable cover, with O-ring, enables easy access to strainer.



Armstrong Model SG Suction Guide

Flo-Trex Valve

- ▸ Reduced field installation and material costs.
- ▸ Cast iron or ductile valve body with hard flanges, or ductile iron valve body with standard grooved ends.
- ▸ Eliminates requirement for two separate valves on pump discharge and, in some cases, a 90° elbow.
- ▸ FTV-G eliminates three welded flange connections.
- ▸ Soft seat to ensure tight shut-off.
- ▸ Spring-closure design uses a non-slam silent check valve feature for vertical mounting.
- ▸ Pressure measurement and pump throttling capabilities.
- ▸ Temperature measurement capability.
- ▸ Spring-closure design check valve prevents gravity or reverse circulation when pump is not operating.
- ▸ Bonnet O-ring can be replaced under full system pressure by back seating of valve stem.
- ▸ Suitable for maximum working pressure up to 375 psi (26 bars) and temperatures up to 230°F (110°C).
- ▸ Valve seat can be changed in the field without use of special tools.
- ▸ Low pressure drop due to **Y** pattern valve design.
- ▸ Valve C_V designed to ASHRAE flow recommendations for quiet system operation.
- ▸ Flow indicator scale includes valve stem, grooved rings and positioning sleeve. The quarter turn graduations on the sleeve, with the scribe line on the stem provide for approximate flow measurement.
- ▸ Provides inexpensive insurance against over-sized pump issues, such as running off the pump curve, even on variable speed units.

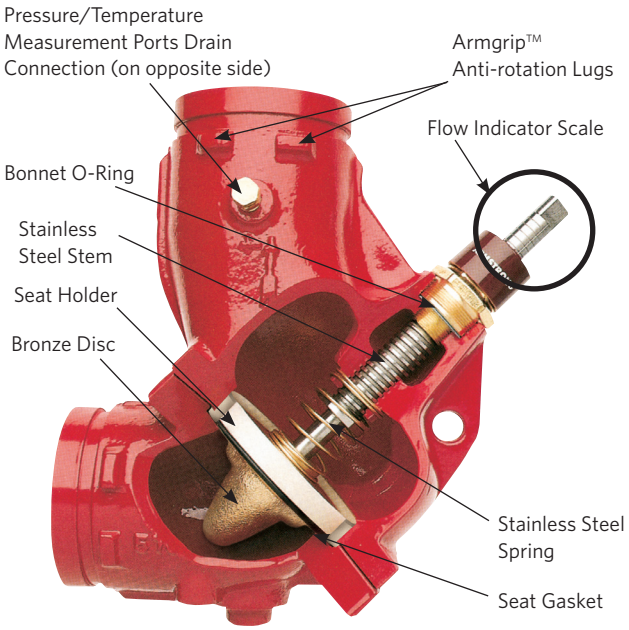

Armstrong Model FTV-GA Flo-Trex Valve



Flow Indicator Scale

▶ Options and Accessories

Connection Types & Configurations

▶ Armstrong Suction Guide Design:



Model SG: Supplied with cast iron or carbon steel body and ANSI or DIN flanges. Available from 2" to 20" (50mm to 500mm) outlet size.

Model SG-TF: Supplied with ductile iron body, threaded inlet and ANSI-125/PN16 outlet flange. Available 1.5" or 2" (40mm to 50mm)

Model SGG: Supplied with ductile iron body with grooved inlet connection and ANSI-125/PN16 outlet flange. Available up to 12" (300mm) outlet size.

Model SGHH: Supplied with ductile iron body and ANSI-250/PN25 flanges. Available up to 12" (300mm) outlet size.

Model SGH-TF: Supplied with ductile iron body, threaded inlet and ANSI-250/PN25 outlet flange. Available 1.5" or 2" (40mm to 50mm)

▶ Armstrong Model FTV Flo-Trex Combination Valves



FTV-TS & FTV-GS: Flo-Trex valve in straight configuration
TS: Threaded connections, available in 1.25", 1.5"& 2".
GS: Grooved connections, available in 1.25", 1.5"& 2".

FTV-FA & FTV-FS: Flo-Trex valve is supplied with hard (cast-in) flanges.
FA: Flanged-angled configuration, available up to 12" (300mm) size.
FS: Flanged-straight configuration, available up to 24" (600mm) size.



FTV-GA & FTV-GS: Flo-Trex valve is supplied with grooved port connections, designed for Armstrong Armgrip™ flange adapters or standard grooved pipe fittings.
GA: Grooved-angled configuration, available up to 12" (300mm) size.
GS: Grooved-straight configuration, available up to 12" (300mm) size.

FTV-HFA & FTV-HFS: Supplied with ANSI-250 (PN25) flanges in angled or straight configuration, available in 8"-12" (200mm-300mm) size.

▶ Hard Flanged Body or Armgrip™ Flange Adapter

The hard flanged body or the combination of the Armstrong flange adapter and Flo-Trex body, equipped with the unique Armgrip™ anti-rotation lugs, ensures a rigid pump installation.



Armstrong Armgrip™ Flange Adapter

▶ Spool Pieces

Spool pieces with hardware kits are available up to 12" (300mm) size to connect the Flo-Trex valves to the discharge of the pump.

TORONTO
23 Bertrand Avenue
Toronto, Ontario
Kanada, M1L 2P3
TEL.: +1 416 755 2291
FAX: +1 416 759 9101

BUFFALO
93 East Avenue
North Tonawanda, New York
USA, 14120-6594
TEL.: +1 716 693 8813
FAX: +1 716 693 8970

MANCHESTER
Wolverton Street
Manchester
United Kingdom, M11 2ET
TEL.: +44 8444 145 145
FAX: +44 8444 145 146

ARMSTRONG

© S.A. Armstrong Limited 2016