AFA CAST IRON PN16 (NON RISING STEM) GATE VALVE WITH OPEN / SHUT INDICATOR

Bolted Bonnet, Inside Screw, Non Rising Stem, Solid Wedge Disc, Flanged Ends Conform to BS 4504, PN16

Fig 16U

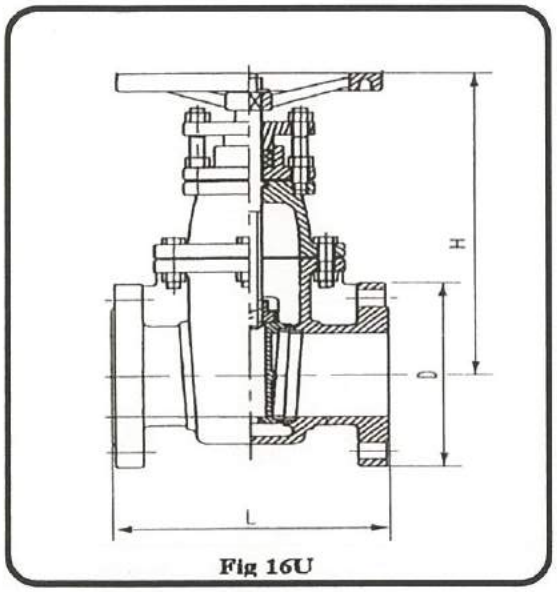

Fig 16U

Material of Parts		
1	Body	Cast Iron
2	Bonnet	Cast Iron
3	Wedge	Cast Iron
4	Handwheel	Cast Iron
5	Stem	Stainless Steel
6	Body Seat	Stainless Steel
7	Disc Seat	Stainless Steel
8	Gland Packing	Graphite
9	Bolt / Nut	Carbon Steel

Operating Condition	
Working Pressure	16 Bars (Non Shock)
Working Temperature	Up to 120°C (Non Shock)
Applicable Fluid	Water

Nominal Sizes		Dimensions (mm)		
mm	inches	L	D	H
50	2	178	165	309
65	2½	190	185	324
80	3	203	200	370
100	4	229	220	430
125	5	254	250	475
150	6	267	285	538
200	8	292	340	678
250	10	330	405	750
300	12	356	460	880
350	14	381	520	940
400	16	406	580	1080
450	18	432	640	1180
500	20	457	715	1380
600	24	508	840	1460

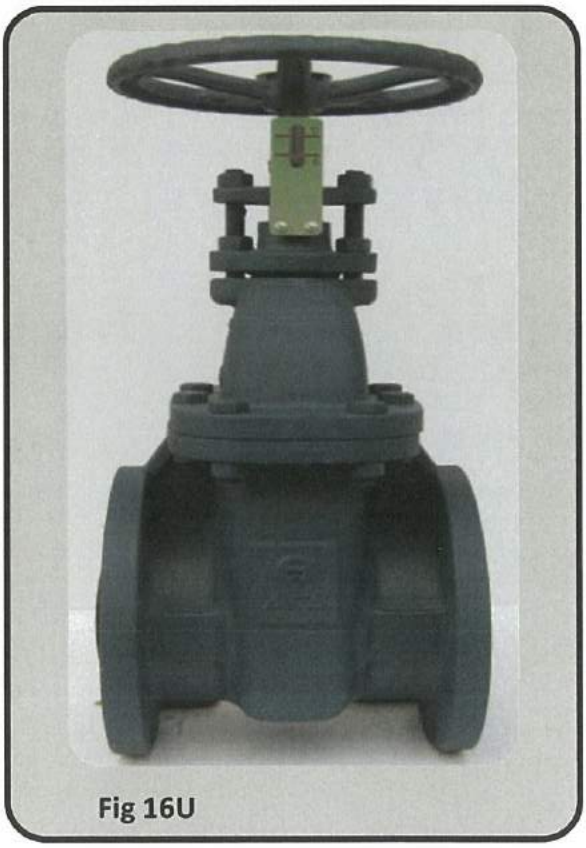
Fig 16U

NOTES

- Larger size available on request

AFA CAST IRON PN16 (RISING STEM) GATE VALVE

Bolted Bonnet, Outside Screw And Yoke, Rising Stem, Solid Wedge Disc
Flanged Ends Conform to BS 4504, PN16

Fig 16V

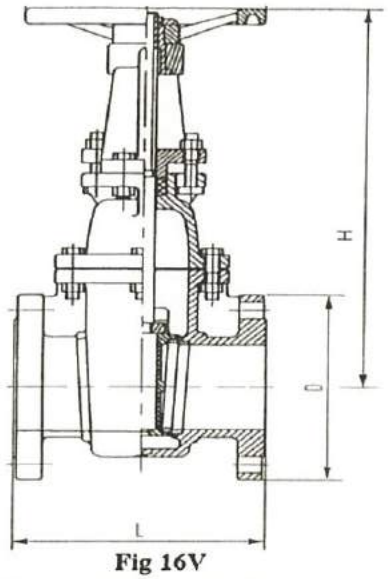

Fig 16V

Material of Parts		
1	Body	Cast Iron
2	Bonnet	Cast Iron
3	Wedge	Cast Iron
4	Handwheel	Cast Iron
5	Stem	Stainless Steel
6	Body Seat	Stainless Steel
7	Disc Seat	Stainless Steel
8	Gland Packing	Graphite
9	Bolt / Nut	Carbon Steel

Operating Condition	
Working Pressure	16 Bars (Non Shock)
Working Temperature	Up to 120°C (Non Shock)
Applicable Fluid	Water

Nominal Sizes		Dimensions (mm)		
mm	inches	L	D	H
50	2	178	165	330
65	2½	190	185	342
80	3	203	200	391
100	4	229	220	487
125	5	254	250	517
150	6	267	285	652
200	8	292	340	796
250	10	330	405	962
300	12	356	460	1083
350	14	381	520	1150
400	16	406	580	1275
450	18	432	640	1350
500	20	457	715	1500
600	24	508	840	1700

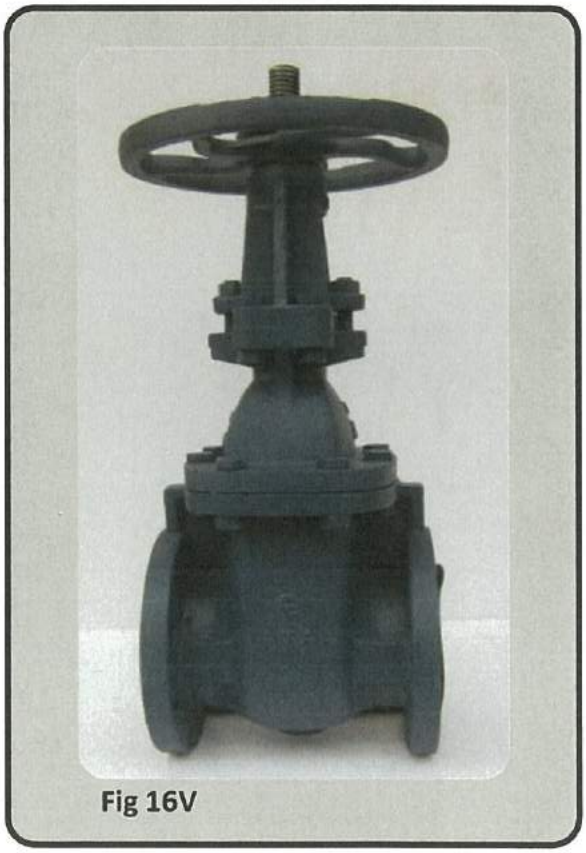
Fig 16V

AFA CAST IRON PN16 GLOBE VALVE

Bolted Bonnet, Outside Screw And Yoke, Rising Stem,
Flanged Ends Conform to BS 4504, PN16

Fig 16W

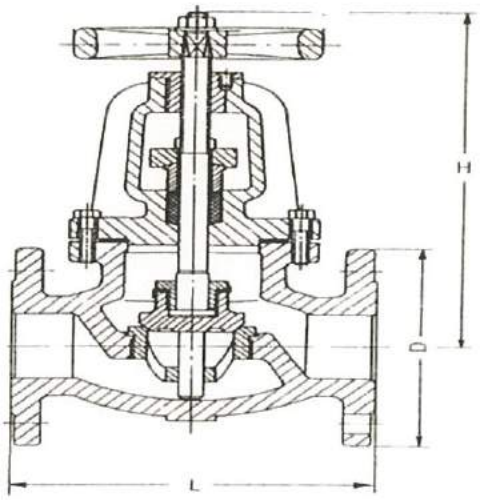

Fig 16W

Material of Parts		
1	Body	Cast Iron
2	Bonnet	Cast Iron
3	Disc	Cast Iron
4	Handwheel	Cast Iron
5	Stem	Stainless Steel
6	Body Seat	Stainless Steel
7	Disc Seat	Stainless Steel
8	Gland Packing	Graphite
9	Bolt / Nut	Carbon Steel

Operating Condition	
Working Pressure	16 Bars (Non Shock)
Working Temperature	-10 to 120°C
Applicable Fluid	Water

Nominal Sizes		Dimensions (mm)		
mm	inches	L	D	H
50	2	203	165	297
65	2½	216	185	310
80	3	241	200	333
100	4	292	220	353
125	5	330	250	388
150	6	356	285	427
200	8	495	340	476
250	10	622	405	539
300	12	699	460	697



Fig 16W

AFA CAST IRON PN16 SWING CHECK VALVE

Bolted Cover, Swing Type

Flanged Ends Conform to PN10, PN16

Fig 16X

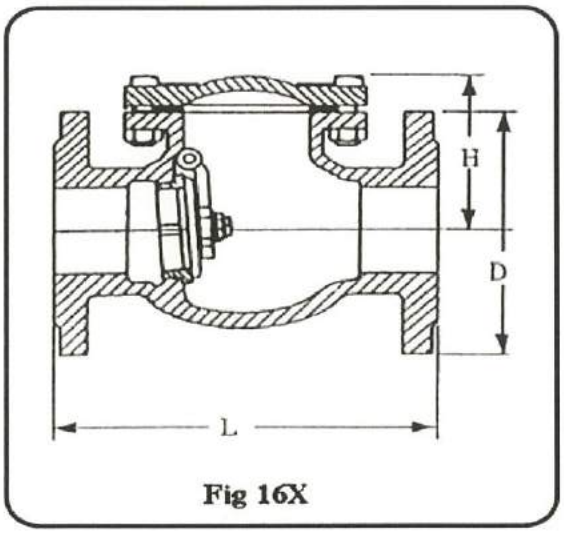

Fig 16X

Material of Parts		
1	Body	Cast Iron
2	Cover	Cast Iron
3	Disc	Cast Iron
4	Body Seat	Stainless Steel
5	Disc Seat	Stainless Steel
6	Hinge Pin	Stainless Steel
7	Gasket	Graphite
8	Bolt / Nut	Carbon Steel

Operating Condition	
Working Pressure	16 Bars (Non Shock)
Working Temperature	-10 to 120°C
Applicable Fluid	Water

Nominal Sizes		Dimensions (mm)		
mm	inches	L	D	H
50	2	203	165	153
65	2½	216	185	162
80	3	241	200	176
100	4	292	220	220
125	5	330	250	226
150	6	356	285	256
200	8	495	340	298
250	10	622	405	376
300	12	699	460	410
350	14	787	520	444
400	16	914	580	501
450	18	965	640	698
500	20	1067	715	742
600	24	1219	840	844



Fig 16X

AFA CAST IRON / DUCTILE IRON Y PATTERN STRAINER

BOLTED COVER, Y-PATTERN BODY, STAINLESS STEEL PUNCHED PLATE SCREEN
FLANGED ENDS CONFORM TO PN10, PN 16

FIG 92

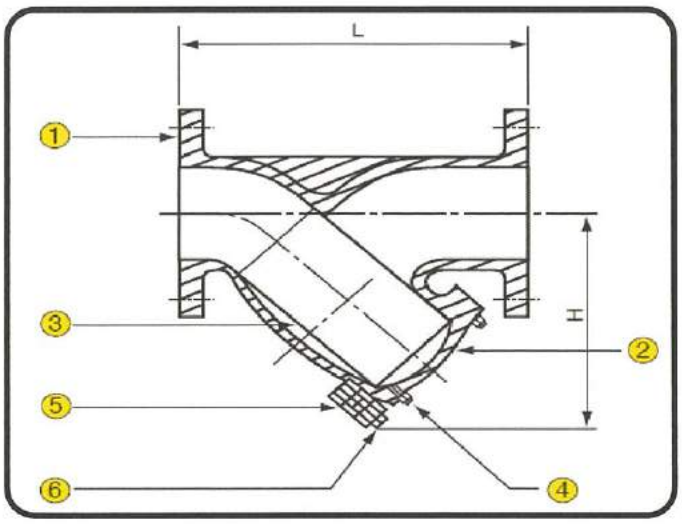

PART & MATERIAL		
S/NO	PART NAME	MATERIAL
1	Body	Cast Iron / Ductile Iron
2	Cover	Cast Iron / Ductile Iron
3	Screen	Stainless Steel
4	Blow Off Plug	Malleable Iron
5	Gasket	Rubber Ring / Asbestos Sheet
6	Bolt / Nut	Carbon Steel

OPERATING CONDITION	
Working Pressure	16 Bars (Non Shock)
Working Temperature	-10 to 110°C
Applicable Fluid	Water

Available Flanges	ANSI 150LBS, JIS 10K, 16K, PN 10/16

DIMENSION

NOMINAL PIPE SIZE		FACE TO FACE L	H	MAXIMUM WORKING PRESSURE	MAXIMUM WORKING TEMP.
MM	INS	MM	MM	BAR (10°C)	0°C
15	¼	130	66	16	110
20	¾	150	73	16	110
25	1	160	68	16	110
32	1¼	180	88	16	110
40	1½	200	95	16	110
50	2	230	139	16	110
65	2½	290	182	16	110
80	3	310	200	16	110
100	4	350	217	16	110
125	5	400	255	16	110
150	6	480	316	16	110
200	8	600	372	16	110
250	10	650	451	16	110
300	12	770	608	16	110
350	14	950	654	10	110
400	16	980	704	10	110



TYPICAL APPLICATIONS AND FLUIDS	
APPLICABLE FLUIDS	WATER, WARM WATER & SEA WATER
TYPICAL APPLICATIONS	PUMPS (SUNCTION & DISCHARGE LINE, AIRCONDITIONING, VENTILATING, CONDENSER PIPING SYSTEMS, MARINE AIR INTAKE ON DIESEL ENGINES, BALLAST LINE

General Description

AFA Y-pattern strainers are widely used to filter foreign matter (containments / solids) attends in every pipeline and build up to cause blockage. It is therefore to protect the pumps suction inlet and pipe equipments against faulty operation, prevent costly shut down and protect pipeline equipments being damaged.

AFA Y-pattern strainers are designed with blow off drain and can be fitted with drain off ball valve for easy cleaning and flushing system. These strainers are supplied with blow off drain plug but only on request, the drain off ball valve can be fitted and supplied according to specification and requirement.

AFA Y-pattern strainers are suitable for use with water, warm water, air. Typical applications include chilled and condenser water system, fire protection system, sanitary and irrigation system and pump suction inlet.

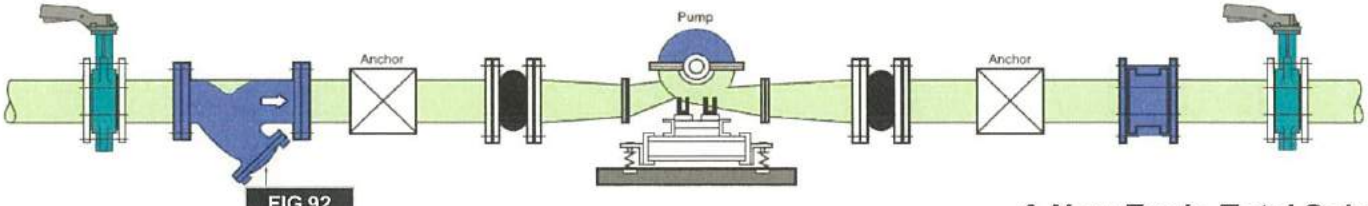

FIG 92

A New Era In Total Solution

AFA - CAST IRON / DUCTILE IRON DUAL FLAP, NON SLAM WAFER CHECK VALVE

FIG 977

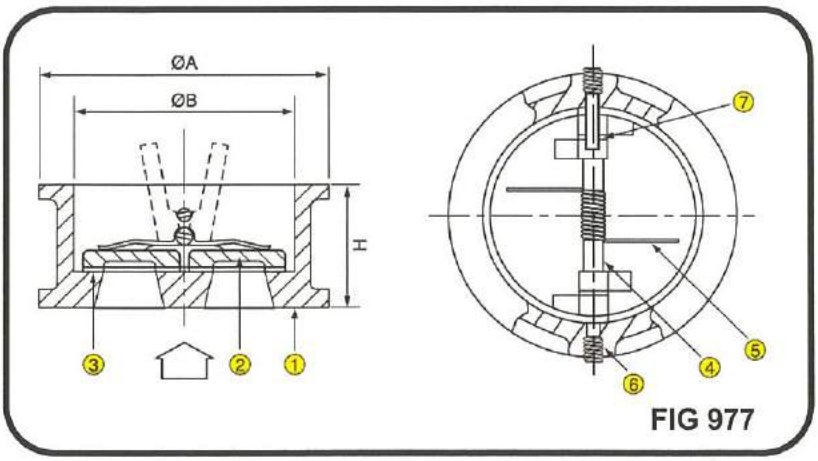

FIG 977

PART & MATERIAL		
S/NO	PART NAME	MATERIAL
1	Body	Cast Iron / Ductile Iron
2	Disc	AISI 316 / Bronze / Ductile Iron
3	Resilient Seat	EPDM / Rubber
4	Hinge Pin	Stainless Steel
5	Spring	Stainless Steel

FLANGES CONNECTION
PN 10 / 16

OPERATING CONDITION	
Working Pressure	10 / 16 Bars (Non Shock)
Applicable Fluid	Water

DIMENSION						
NOMINAL PIPE SIZE		EXTERNAL DIAMETER ΦA DIN STANDARD	INTERNAL DIAMETER ΦB	FACE TO FACE H	MAXIMUM WORKING PRESSURE	MAXIMUM WORKING TERMP.
MM	INS	MM	MM	MM	BAR	°C
50	2	109	70.5	54	16	110
65	2½	129	83.5	54	16	110
80	3	144	91.5	57	16	110
100	4	164	115.5	64	16	110
125	5	194	142.5	70	16	110
150	6	220	169.5	76	16	110
200	8	275	220.5	95	16	110
250	10	330	275.5	108	16	110
300	12	380	325.5	144	16	110
350	14	440	356	184	10	110
400	16	491	406	191	10	110
450	18	541	468	203	10	110
500	20	596	545	213	10	110
600	24	697	617	222	10	110


FIG 977

TYPICAL APPLICATIONS AND FLUIDS	
APPLICABLE FLUIDS	WATER, WARM WATER, SEA WATER & AIR
TYPICAL APPLICATIONS	PUMPS (SUNCTION & DISCHARGE LINE, AIRCONDITIONING, VENTILATING, CONDENSER PIPING SYSTEMS, MARINE AIR INTAKE ON DIESEL ENGINES, BALLAST LINE

NOTES

- Valve working under higher temperature, the pressure rating is reduced accordingly.
- Lifting eye bolt is fitted for size DN200 & above.
- For other kinds of applicable fluids, except the above, to which the rubber joint becomes applicable, please kindly consult your supplier or manufacturer.

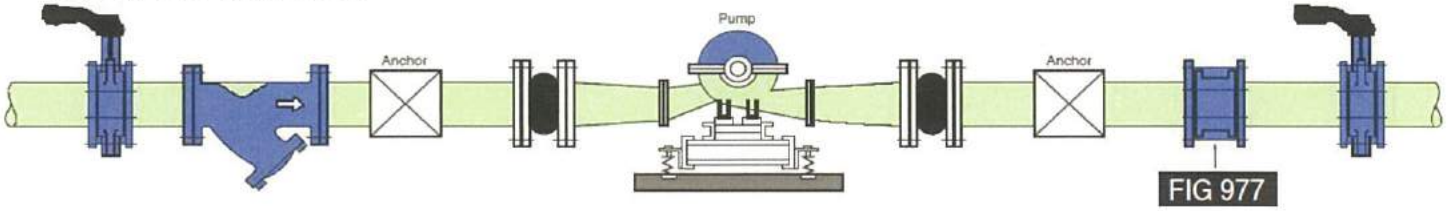

FIG 977

A New Era In Total Solution

AFA - FLANGE TYPE SILENT NON SLAM CHECK VALVE

FIG 98

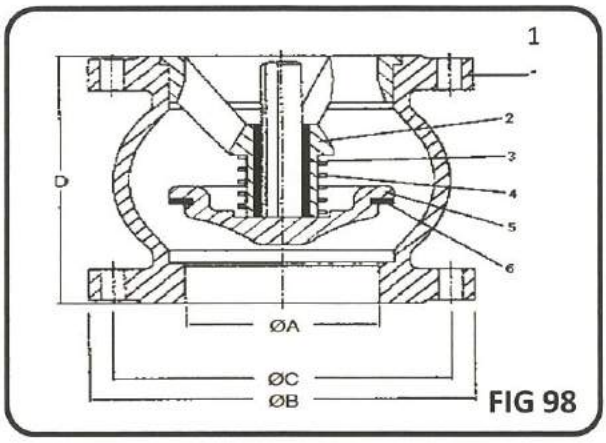

FIG 98

PART & MATERIAL		
S/NO	PART NAME	MATERIAL
1	Body	Cast Iron / Ductile Iron
2	Bracket	Cast Iron / Ductile Iron
3	Brushing	Bronze
4	Spring	Stainless Steel
5	Disc	Stainless Steel
6	Seat	EPDM / Rubber

Other materials except above are available on request.

OPERATING CONDITION	
Operating Pressure	16 Bar
Operating Temperature	110°C
Availabe Flange Connection	PN10/16, ANSI 150 LBS JIS 10K & TABLE E

DIMENSION					
NOMINAL PIPE		ΦA	ΦB	ΦC	D
MM	INS	MM	MM	MM	MM
50	2	55	165	125	100
65	2½	65	185	145	120
80	3	80	200	160	135
100	4	105	220	180	165
125	5	125	250	210	200
150	6	150	285	240	231
200	8	200	340	295	288
250	10	250	405	350	354
300	12	300	460	400	395
350	14	322	555	445	472


FIG 98

TYPICAL APPLICATIONS AND FLUIDS	
APPLICABLE FLUIDS	WATER, WARM WATER & SEA WATER
TYPICAL APPLICATIONS	PUMPS (SUNCTION & DISCHARGE LINE, AIRCONDITIONING, VENTILATING, CONDENSER PIPING SYSTEMS, MARINE AIR INTAKE ON DIESEL ENGINES, BALLAST LINE

Advantages

- ~ Operates in any position
- ~ Minimum head loss
- ~ Silent, reliable sealing , compact
- ~ Exceptional robustness
- ~ Does not generate hammering
- ~ Closing system: long black axial guiding for reduced displacement
- ~ Sealing guaranteed by a flat seal
- ~ Return Spring

General Description

AFA Flange Type Silent Non Slam Check Valve are designed for liquid service. Spring automatically closes disc at zero flow - before flow reversal occurs and thereby prevents surge and water hammer. AFA Flange Type Silent Non Slam Check Valve can be installed in any position.

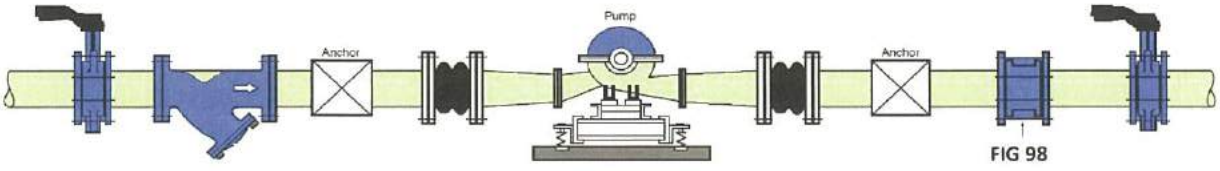

FIG 98

A New Era In Total Solution

AFA DUCTILE IRON CLASS 150 (RISING STEM) GATE VALVE

Bolted Bonnet, Outside Screw And Yoke, Rising Stem, Solid Wedge Disc
Flanged Ends Conform to ANSI B16.5

Fig 15V

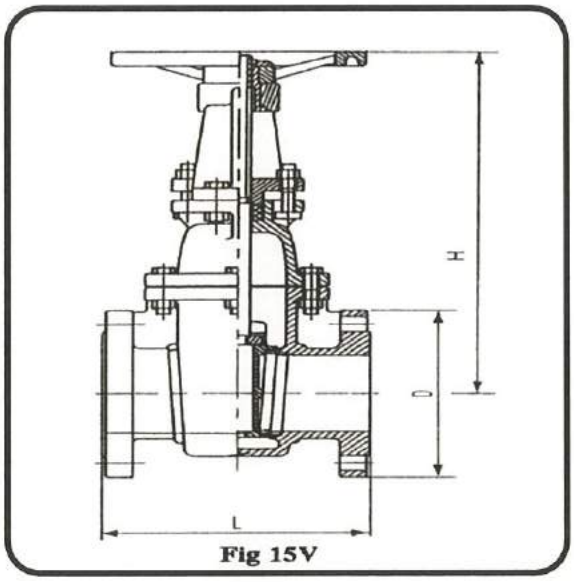

Fig 15V

Material of Parts		
1	Body	Ductile Iron
2	Bonnet	Ductile Iron
3	Wedge	Ductile Iron
4	Handwheel	Cast Iron
5	Stem	Stainless Steel
6	Body Seat Ring	Stainless Steel
7	Disc Seat Ring	Stainless Steel
8	Gland Packing	Graphite
9	Bolt / Nut	Carbon Steel

Operating Condition	
Working Pressure	20 Bars (Non Shock)
Working Temperature	-10 to 120°C
Applicable Fluid	Water

Nominal Sizes		Dimensions (mm)		
mm	inches	L	D (inches)	H
50	2	178	6.0	320
65	2½	190	7.0	345
80	3	203	7.5	387
100	4	229	9.0	490
125	5	254	10.0	576
150	6	267	11.0	680
200	8	292	13.5	808
250	10	330	16.0	1010
300	12	356	19.0	1080
350	14	381	21.0	1640
400	16	406	23.5	1804
450	18	432	25.0	2090
500	20	457	27.5	2490
600	24	508	32.0	2960


Fig 15V

NOTES

- Larger size available on request

AFA DUCTILE IRON CLASS 150 GLOBE VALVE

Bolted Bonnet, Outside Screw And Yoke, Rising Stem,
Flanged Ends Conform to ANSI B16.5.

Fig 15W

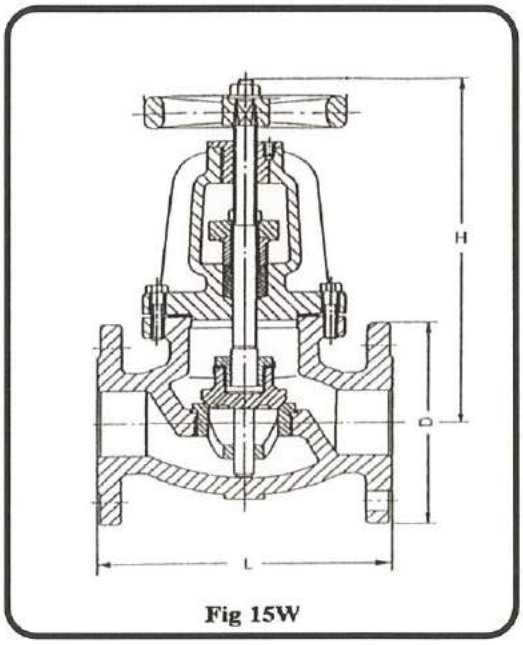

Fig 15W

Material of Parts		
1	Body	Ductile Iron
2	Bonnet	Ductile Iron
3	Disc	Ductile Iron
4	Handwheel	Cast Iron
5	Stem	Stainless Steel
6	Body Seat	Stainless Steel
7	Disc Seat	Stainless Steel
8	Gland Packing	Graphite
9	Bolt / Nut	Carbon Steel

Operating Condition	
Working Pressure	20 Bars (Non Shock)
Working Temperature	-10 to 120°C
Applicable Fluid	Water

Nominal Sizes		Dimensions (mm)		
mm	inches	L	D (inches)	H
50	2	203	6.0	298
65	2½	216	7.0	314
80	3	241	7.5	333
100	4	292	9.0	353
125	5	356	10.0	388
150	6	406	11.0	427
200	8	495	13.5	476
250	10	622	16.0	539
300	12	699	19.0	612



Fig 15W

NOTES

- Larger size available on request

AFA DUCTILE IRON CLASS 150 SWING CHECK VALVE

Bolted Cover, Swing Type

Flanged Ends Conform to ANSI B16.5

Fig 15X

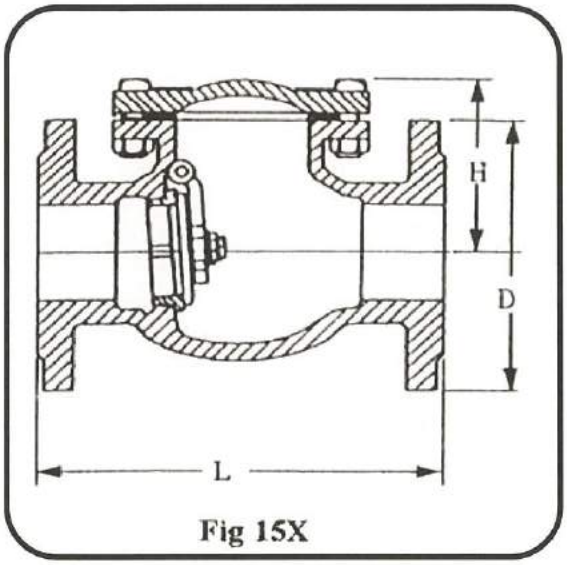

Fig 15X

Material of Parts		
1	Body	Ductile Iron
2	Cover	Ductile Iron
3	Disc	Ductile Iron
4	Body Seat	Stainless Steel
5	Disc Seat	Stainless Steel
6	Hinge Pin	Stainless Steel
7	Gasket	Graphite
8	Bolt / Nut	Carbon Steel

Operating Condition	
Working Pressure	20 Bars (Non Shock)
Working Temperature	-10 to 120°C
Applicable Fluid	Water

Nominal Sizes		Dimensions (mm)		
mm	inches	L	D (inches)	H
50	2	203	6.0	153
65	2½	216	7.0	162
80	3	241	7.5	176
100	4	291	9.0	220
125	5	330	10.0	226
150	6	356	11.0	256
200	8	495	13.5	298
250	10	622	16.0	376
300	12	699	19.0	410
350	14	787	21.0	444
400	16	914	23.5	501
450	18	914	25.0	698
500	20	1016	27.5	742
600	24	1219	32.0	844



Fig 15X

AFA DUCTILE IRON CLASS 150
Y-PATTERN STRAINER

Bolted Cover, Y-Pattern Body, Stainless Steel Punched Plate Screen, Flanged Ends Conform to ANSI B16.5

Fig 15Y

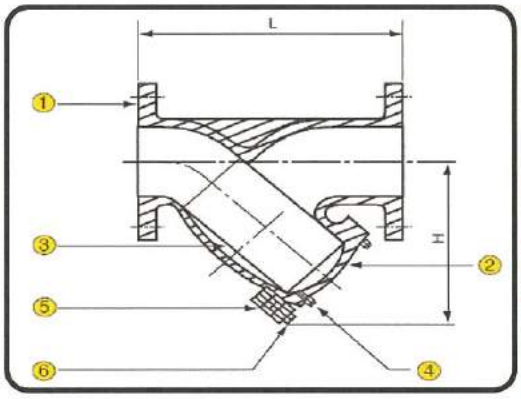

Material of Parts		
1	Body	Ductile Iron
2	Cover	Ductile Iron
3	Screen	Stainless Steel 304
4	Plug	Malleable Iron
5	Gasket	Graphite
6	Bolt / Nut	Carbon Steel

Operating Condition	
Working Pressure	20 Bars (Non Shock)
Working Temperature	-10 to 120°C
Applicable Fluid	Water

Available Flanges	ANSI 150LBS, JIS 10K, 16K, PN 10/16

Nominal Sizes		Dimensions (mm)	
mm	inches	L	H
50	2	225	144
65	2½	273	176
80	3	292	195
100	4	352	246
125	5	391	300
150	6	470	320
200	8	543	397
250	10	660	483
300	12	762	560
350	14	949	689
400	16	1079	789
450	18	1150	835
500	20	975	922
600	24	1219	1020


Fig 15Y

General Description

AFA Y-pattern strainers are widely used to filter foreign matter (containments / solids) attends in every pipeline and build up to cause blockage. It is therefore to protect the pumps suction inlet and pipe equipments against faulty operation, prevent costly shut down and protect pipeline equipments being damaged.

AFA Y-pattern strainers are designed with blow off drain and can be fitted with drain off ball valve for easy cleaning and flushing system. These strainers are supplied with blow off drain plug but only on request, the drain off ball valve can be fitted and supplied according to specification and requirement.

AFA Y-pattern strainers are suitable for use with water, warm water, air. Typical applications include chilled and condenser water system, fire protection system, sanitary and irrigation system and pump suction inlet.

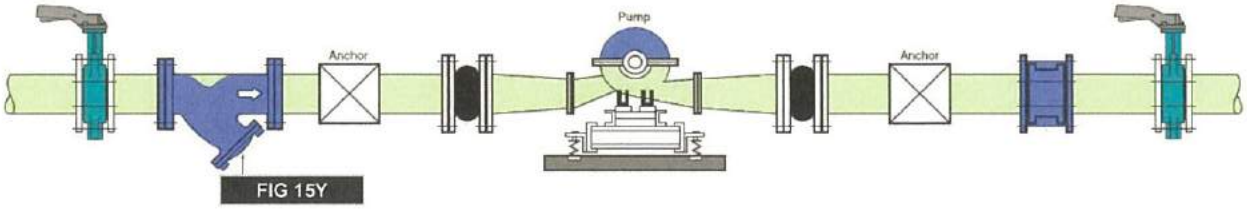

FIG 15Y

AFA - DUCTILE IRON DUAL FLAP, NON-SLAM WAFER CHECK VALVE

FIG 999

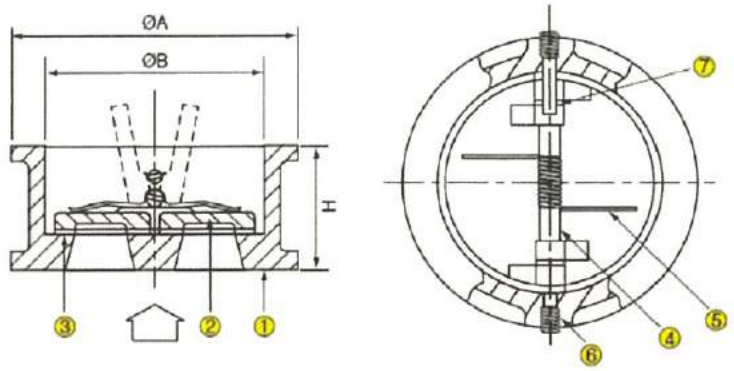

FIG 999

PART & MATERIAL		
S/NO	PART NAME	MATERIAL
1	Body	Ductile iron (GGG40)
2	Disc	AISI 316 / Ductile Iron
3	Resilient Seat	EPDM / Rubber
4	Hinge Pin	Stainless Steel
5	Spring	Stainless Steel

Other materials except above are available on request.

FLANGES CONNECTION
PN 16 / 25

OPERATING CONDITION	
Working Pressure	20 Bars (Non Shock)
Applicable Fluid	Water

DIMENSION						
NOMINAL PIPE SIZE		EXTERNAL DIAMETER ΦA DIN STANDARD	INTERNAL DIAMETER ΦB	FACE TO FACE H	MAXIMUM WORKING PRESSURE	MAXIMUM WORKING TERMP.
MM	INS	MM	MM	MM	BAR	°C
50	2	109	70	54	20	110
65	2½	129	83	54	20	110
80	3	144	90	57	20	110
100	4	164	115	64	20	110
125	5	194	142	70	20	110
150	6	220	169	76	20	110
200	8	275	219	95	20	110
250	10	330	273	108	20	110
300	12	380	324	144	20	110
350	14	440	356	184	20	110
400	16	491	406	191	20	110

Larger sizes on request



FIG 999

TYPICAL APPLICATIONS AND FLUIDS	
APPLICABLE FLUIDS	WATER, WARM WATER & SEA WATER
TYPICAL APPLICATIONS	PUMPS (SUNCTION & DISCHARGE LINE, AIRCONDITIONING, VENTILATING, CONDENSER PIPING SYSTEMS, MARINE AIR INTAKE ON DIESEL ENGINES, BALLAST LINE

NOTES

- Valve working under higher temperature, the pressure rating is reduced accordingly.
- Lifting eye bolt is fitted for size DN200 & above.
- For other kinds of applicable fluids, except the above, to which the rubber joint becomes applicable, please kindly consult your supplier or manufacturer.

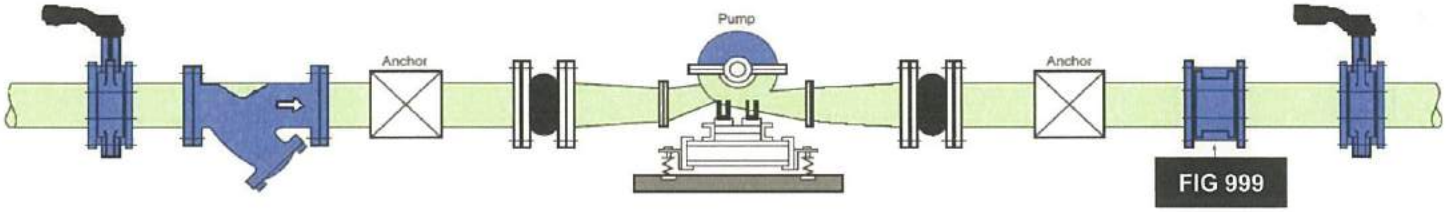

FIG 999

A New Era In Total Solution

AFA CAST STEEL CLASS 300 (OS&Y RISING STEM) GATE VALVE

Bolted Bonnet, Outside Screw And Yoke, Rising Stem, Solid Wedge Disc
Flanged Ends Conform to ANSI B16.5

Fig 30V

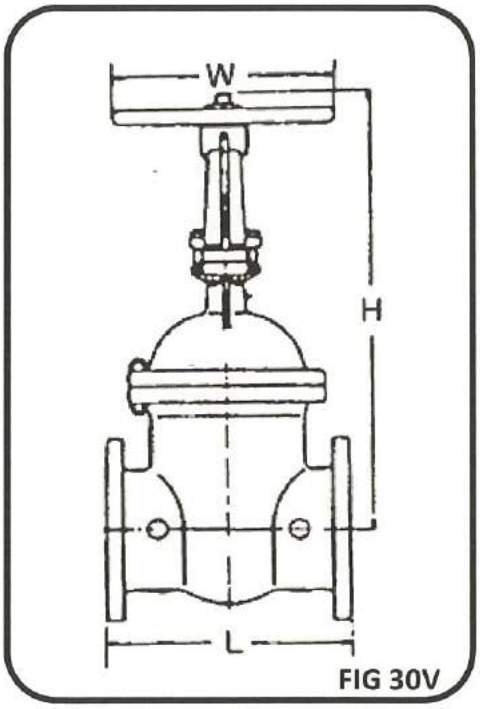

FIG 30V

Material of Parts		
1	Body	Cast Steel
2	Bonnet	Cast Steel
3	York	Cast Steel
4	Wedge	Cast Steel
5	Stem	Stainless Steel
6	Body Seat Ring	Stainless Steel
7	Disc Seat Ring	Stainless Steel
8	Handwheel	Ductile Iron
9	Bolt / Nut	Carbon Steel

Operating Condition	
Working Pressure	25 Bars (Non Shock)
Working Temperature	-10 to 120°C
Applicable Fluid	Water

Nominal Sizes		Dimensions (MM)		
mm	inches	L	D	H
50	2"	216	165	356
65	2½	241	190	395
80	3	283	210	440
100	4	305	254	500
150	6	403	318	630
200	8	419	381	850
250	10	457	445	1010
300	12	502	521	1160
350	14	762	584	1310
400	16	838	648	1545
450	18	914	711	1623
500	20	991	775	1770
600	24	1147	914	2100


Fig 30V

AFA CAST STEEL CLASS 300 GLOBE VALVE

Bolted Bonnet, Outside Screw And Yoke, Rising Stem, Flanged Ends Conform to ANSI B16.5.

Fig 30W

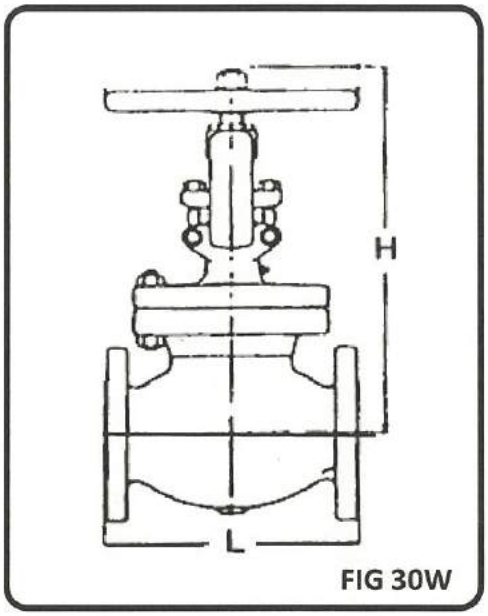

FIG 30W

Material of Parts		
1	Body	Cast Steel
2	Bonnet	Cast Steel
3	Disc	Cast Steel
4	Stem	Stainless Steel
5	Handwheel	Ductile Iron
6	Bolt / Nut	Carbon Steel

Operating Condition	
Working Pressure	25 Bars (Non Shock)
Working Temperature	-10 to 120°C
Applicable Fluid	Water

Nominal Sizes		Dimensions (MM)		
mm	inches	L	D	H
50	2"	267	165	386
65	2½	292	190	410
80	3	318	210	440
100	4	356	254	498
150	6	445	318	620
200	8	559	381	750
250	10	622	445	890
300	12	711	521	990


Fig 30W

NOTES

■ Larger size available on request

AFA CAST STEEL CLASS 300 SWING CHECK VALVE

Bolted Cover, Swing Type

Flanged Ends Conform to ANSI B16.5

Fig 30X

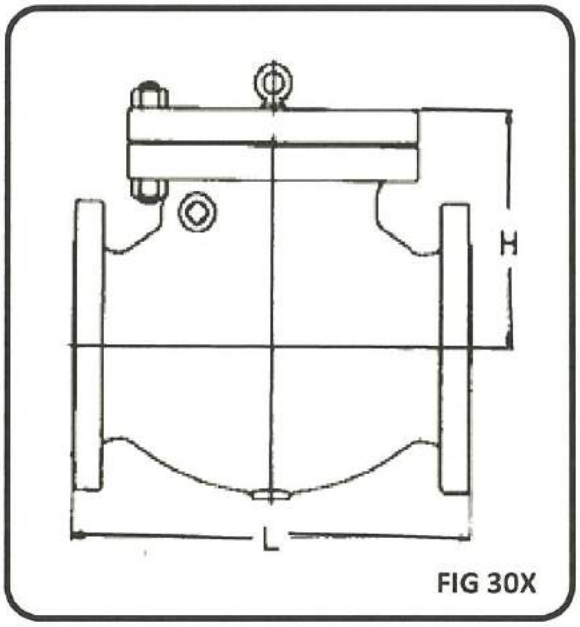

FIG 30X

Material of Parts		
1	Body	Cast Steel
2	Cover	Cast Steel
3	Disc	Cast Steel
4	Body Seat	Stainless Steel
5	Disc Seat	Stainless Steel
6	Hinge Pin	Stainless Steel
7	Gasket	Graphite
8	Bolt / Nut	Carbon Steel

Operating Condition	
Working Pressure	25 Bars (Non Shock)
Working Temperature	-10 to 120°C
Applicable Fluid	Water

Nominal Sizes		Dimensions (MM)	
mm	inches	L	D
50	2"	267	165
65	2½	292	190
80	3	318	210
100	4	356	254
150	6	445	318
200	8	533	381
250	10	622	445
300	12	711	521



Fig 30X

NOTES

- Larger size available on request

AFA DUCTILE IRON CLASS 300 Y-PATTERN STRAINER

Bolted Cover, Y-Pattern Body, Stainless Steel Punched Plate Screen, Flanged Ends Conform to ANSI B16.5

Fig 30Y

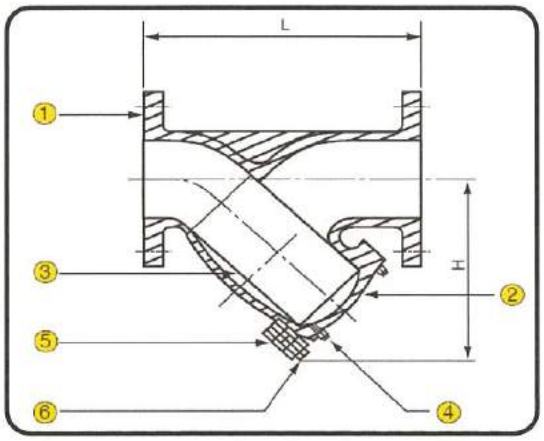

Material of Parts		
1	Body	Ductile Iron
2	Cover	Ductile Iron
3	Screen	Stainless Steel 304
4	Plug	Malleable Iron / Steel
5	Gasket	Graphite
6	Bolt / Nut	Carbon Steel

Operating Conditions	
Working Pressure	25 Bars (Non Shock)
Working Temperature	-10 to 120°C
Applicable Fluid	Water

Available Flanges	ANSI 150LBS, 300LBS

Nominal Sizes		Dimensions (MM)	
mm	inches	L	H
65	2½	273	190.0
80	3	292	210.0
100	4	352	254.0
150	6	470	318.0
200	8	543	381.0
250	10	660	445.0
300	12	762	521.0
350	14	949	584.0
400	16	1079	649.0


Fig 30Y

NOTES

■ Larger size available on request

TYPICAL APPLICATIONS AND FLUIDS	
APPLICABLE FLUIDS	WATER, WARM WATER & SEA WATER
TYPICAL APPLICATIONS	PUMPS (SUNCTION & DISCHARGE LINE, AIRCONDITIONING, VENTILATING, CONDENSER PIPING SYSTEMS, MARINE AIR INTAKE ON DIESEL ENGINES, BALLAST LINE

General Description

AFA Y-pattern strainers are widely used to filter foreign matter (containments / solids) attends in every pipeline and build up to cause blockage. It is therefore to protect the pumps suction inlet and pipe equipments against faulty operation, prevent costly shut down and protect pipeline equipments being damaged.

AFA Y-pattern strainers are designed with blow off drain and can be fitted with drain off ball valve for easy cleaning and flushing system. These strainers are supplied with blow off drain plug but only on request, the drain off ball valve can be fitted and supplied according to specification and requirement.

AFA Y-pattern strainers are suitable for use with water, warm water, air. Typical applications include chilled and condenser water system, fire protection system, sanitary and irrigation system and pump suction inlet.

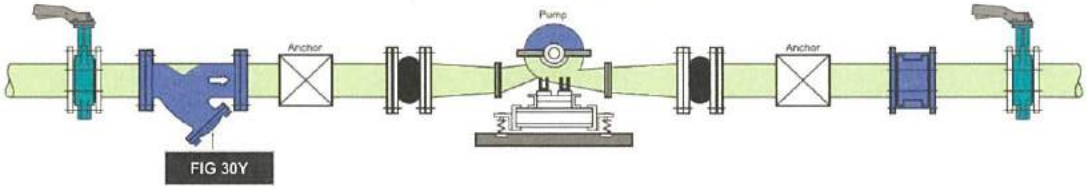

FIG 30Y

AFA - CAST STEEL SILENT NON-SLAM CHECK VALVE FLANGED END

Fig 25S

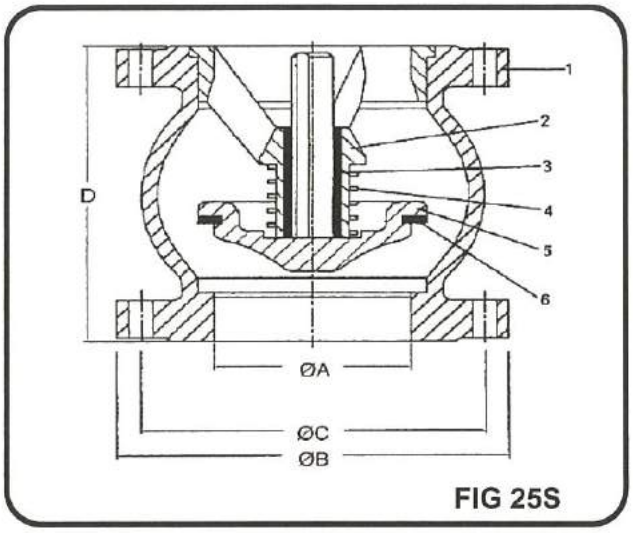

FIG 25S

PART & MATERIAL		
S/NO	PART NAME	MATERIAL
1	Body	Cast Steel / Ductile Iron
2	Bracket	Cast Steel
3	Brushing	Stainless Steel / Bronze
4	Spring	Stainless Steel
5	Disc Seat	Cast Steel / Stainless Steel
6	Seating	EPDM Rubber

Other materials except above are available on request.

OPERATING CONDITION	
Operating Pressure	25 Bar (Non Shock)
Operating Temperature	-10°C to 120°C
Available Flange Connection	BIS / JIS / ANSI

DIMENSIONS			
NOMINAL PIPE SIZE (DN)		ΦA	ΦB
MM	INS	MM	MM
50	2	55	165
65	2½	65	185
80	3	80	200
100	4	105	220
125	5	125	250
150	6	150	285
200	8	200	340
250	10	250	405
300	12	300	460
350	14	322	555


FIG 25S

TYPICAL APPLICATIONS AND FLUIDS	
APPLICABLE FLUIDS	WATER
TYPICAL APPLICATIONS	PUMPS (SUNCTION OF DISCHARGE LINE / AIRCONDITIONING SYSTEM (CHILLED / CONDENSER WATER PIPING SYSTEM), FIRE PROTECTION, FIRE HYDRANT PIPING SYSTEM & PLUMBING AND IRRIGATION PIPING SYSTEM

Advantages

- ~ Operates in any position
- ~ Minimum head loss
- ~ Silent, reliable sealing , compact
- ~ Exceptional robustness
- ~ Does not generate hammering
- ~ Closing system: long black axial guiding for reduced displacement
- ~ Sealing guaranteed by a flat seal
- ~ Return Spring

General Description

AFA Flange Type Silent Non Slam Check Valve are designed for liquid service. Spring automatically closes disc at zero flow - before flow reversal occurs and thereby prevents surge and water hammer. AFA Flange Type Silent Non Slam Check Valve can be installed in any position.

AFA CAST STEEL CLASS 300 (OS&Y RISING STEM) GATE VALVE

Bolted Bonnet, Outside Screw And Yoke, Rising Stem, Solid Wedge Disc
Flanged Ends Conform to ANSI B16.5

Fig 50V

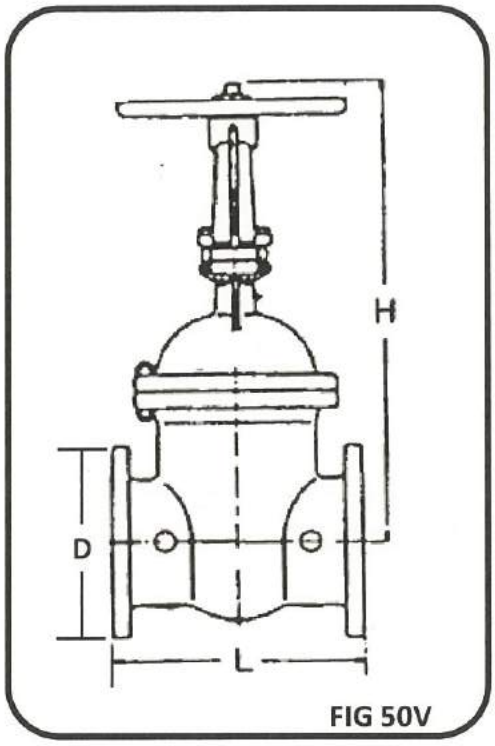

FIG 50V

Material of Parts		
1	Body	Cast Steel
2	Bonnet	Cast Steel
3	York	Cast Steel
4	Wedge	Cast Steel
5	Stem	Stainless Steel
6	Body Seat Ring	Stainless Steel
7	Disc Seat Ring	Stainless Steel
8	Handwheel	Ductile Iron
9	Bolt / Nut	Carbon Steel

Operating Condition	
Working Pressure	30 Bars (Non Shock)
Working Temperature	-10 to 120°C
Applicable Fluid	Water

Nominal Sizes		Dimensions (MM)		
mm	inches	L	D	H
50	2"	216	165	356
65	2½	241	190	395
80	3	283	210	440
100	4	305	254	500
150	6	403	318	630
200	8	419	381	850
250	10	457	445	1010
300	12	502	521	1160
350	14	762	584	1310
400	16	838	648	1545
450	18	914	711	1623
500	20	991	775	1770
600	24	1147	914	2100


Fig 50V

AFA CAST STEEL CLASS 300 GLOBE VALVE

Bolted Bonnet, Outside Screw And Yoke, Rising Stem,
Flanged Ends Conform to ANSI B16.5.

Fig 50W

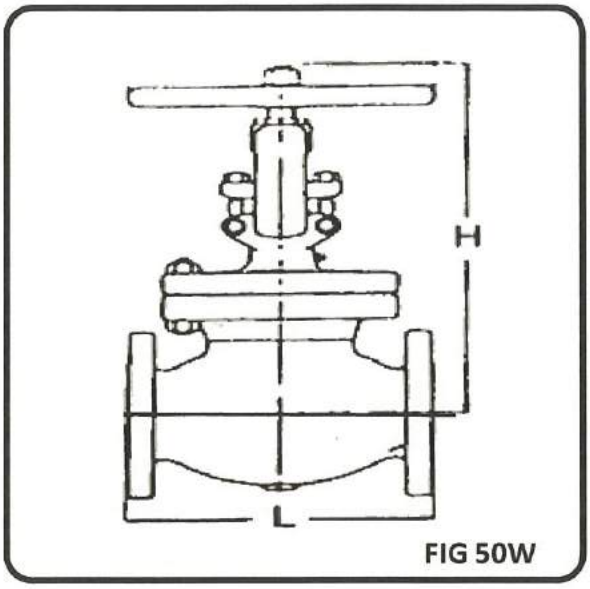

FIG 50W

Material of Parts		
1	Body	Cast Steel
2	Bonnet	Cast Steel
3	Disc	Cast Steel
4	Stem	Stainless Steel
5	Handwheel	Ductile Iron
6	Bolt / Nut	Carbon Steel

Operating Condition	
Working Pressure	30 Bars (Non Shock)
Working Temperature	-10 to 120°C
Applicable Fluid	Water

Nominal Sizes		Dimensions (MM)		
mm	inches	L	D	H
50	2"	267	165	386
65	2½	292	190	410
80	3	318	210	440
100	4	356	254	498
150	6	445	318	620
200	8	559	381	750
250	10	622	445	890
300	12	711	521	990


Fig 50W

NOTES

■ Larger size available on request

AFA CAST STEEL CLASS 300 SWING CHECK VALVE

Bolted Cover, Swing Type

Flanged Ends Conform to ANSI B16.5

Fig 50X

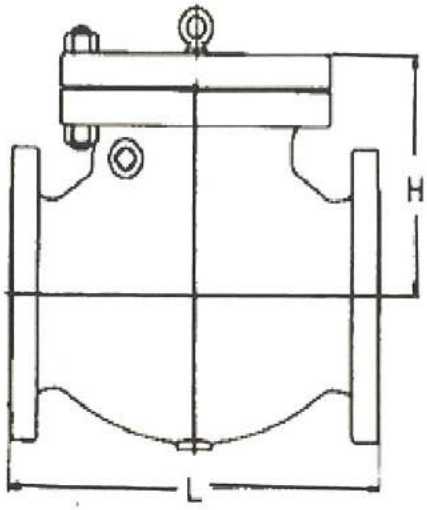

FIG 50X

Material of Parts		
1	Body	Cast Steel
2	Cover	Cast Steel
3	Disc	Cast Steel
4	Body Seat	Stainless Steel
5	Disc Seat	Stainless Steel
6	Hinge Pin	Stainless Steel
7	Gasket	Graphite
8	Bolt / Nut	Carbon Steel

Operating Condition	
Working Pressure	30 Bars (Non Shock)
Working Temperature	-10 to 120°C
Applicable Fluid	Water

Nominal Sizes		Dimensions (MM)	
mm	inches	L	D
50	2"	267	165
65	2½	292	190
80	3	318	210
100	4	356	254
150	6	445	318
200	8	533	381
250	10	622	445
300	12	711	521



Fig 50X

NOTES

■ Larger size available on request

AFA DUCTILE IRON CLASS 300
Y-PATTERN STRAINER

Bolted Cover, Y-Pattern Body, Stainless Steel Punched Plate Screen, Flanged Ends Conform to ANSI B16.5

Fig 50Y

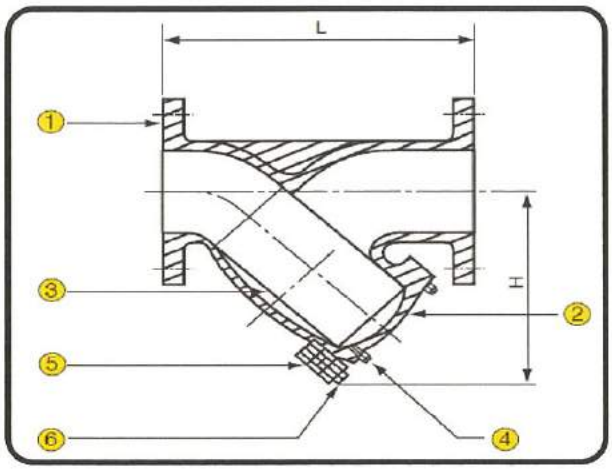

Material of Parts		
1	Body	Ductile Iron
2	Cover	Ductile Iron
3	Screen	Stainless Steel 304
4	Plug	Malleable Iron / Steel
5	Gasket	Graphite
6	Bolt / Nut	Carbon Steel

Operating Condition	
Working Pressure	30 Bars (Non Shock)
Working Temperature	-10 to 120°C
Applicable Fluid	Water

Available Flanges	ANSI 150LBS, 300LBS

Nominal Sizes		Dimensions (MM)	
mm	inches	L	D
65	2½	273	190.0
80	3	292	210.0
100	4	352	254.0
150	6	470	318.0
200	8	543	381.0
250	10	660	445.0
300	12	762	521.0
350	14	949	584.0
400	16	1079	649.0



NOTES

■ Larger size available on request

General Description

AFA Y-pattern strainers are widely used to filter foreign matter (containments / solids) attends in every pipeline and build up to cause blockage. It is therefore to protect the pumps suction inlet and pipe equipments against faulty operation, prevent costly shut down and protect pipeline equipments being damaged.

AFA Y-pattern strainers are designed with blow off drain and can be fitted with drain off ball valve for easy cleaning and flushing system. These strainers are supplied with blow off drain plug but only on request, the drain off ball valve can be fitted and supplied according to specification and requirement.

AFA Y-pattern strainers are suitable for use with water, warm water, air. Typical applications include chilled and condenser water system, fire protection system, sanitary and irrigation system and pump suction inlet.

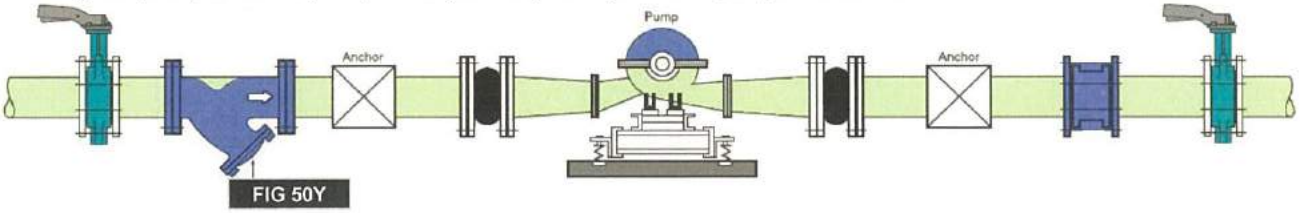

FIG 50Y

AFA - CAST STEEL SILENT NON-SLAM CHECK VALVE FLANGED END

FIG 50S

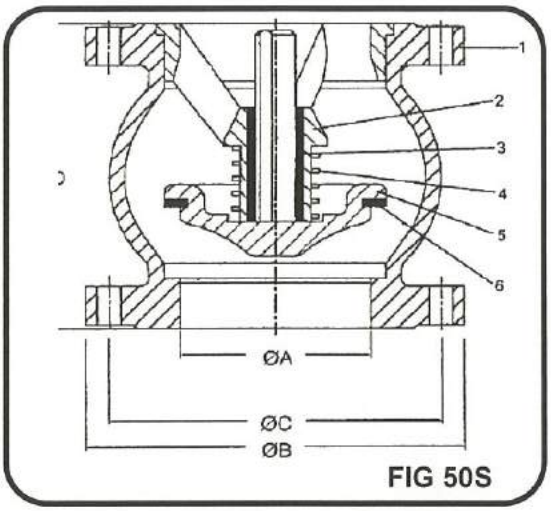

FIG 50S

PART & MATERIAL		
S/NO	PART NAME	MATERIAL
1	Body	Cast Steel / Ductile Iron
2	Bracket	Cast Steel
3	Brushing	Stainless Steel / Bronze
4	Spring	Stainless Steel
5	Disc Seat	Cast Steel / Stainless Steel
6	Seating	EPDM Rubber

Other materials except above are available on request.

OPERATING CONDITION	
Operating Pressure	30 Bar (Non Shock)
Operating Temperature	-10°C to 120°C
Available Flange Connection	BIS / JIS / ANSI

DIMENSIONS			
NOMINAL PIPE SIZE (DN)		ΦA	ΦB
MM	INS	MM	MM
50	2	55	165
65	2½	65	185
80	3	80	200
100	4	105	220
125	5	125	250
150	6	150	285
200	8	200	340
250	10	250	405
300	12	300	460
350	14	322	555


FIG 50S

TYPICAL APPLICATIONS AND FLUIDS	
APPLICABLE FLUIDS	WATER
TYPICAL APPLICATIONS	PUMPS (SUNCTION OF DISCHARGE LINE / AIRCONDITIONING SYSTEM (CHILLED / CONDENSER WATER PIPING SYSTEM), FIRE PROTECTION, FIRE HYDRANT PIPING SYSTEM & PLUMBING AND IRRIGATION PIPING SYSTEM

Advantages

- Operates in any position
- Minimum head loss
- Silent, reliable sealing , compact
- Exceptional robustness
- Does not generate hammering
- Closing system: long black axial guiding for reduced displacement
- Sealing guaranteed by a flat seal
- Return Spring

General Description

AFA Flange Type Silent Non Slam Check Valve are designed for liquid service. Spring automatically closes disc at zero flow - before flow reversal occurs and thereby prevents surge and water hammer. AFA Flange Type Silent Non Slam Check Valve can be installed in any position.

AFA - WAFER TYPE BUTTERFLY VALVE

HAND LEVER

FIG BW-L

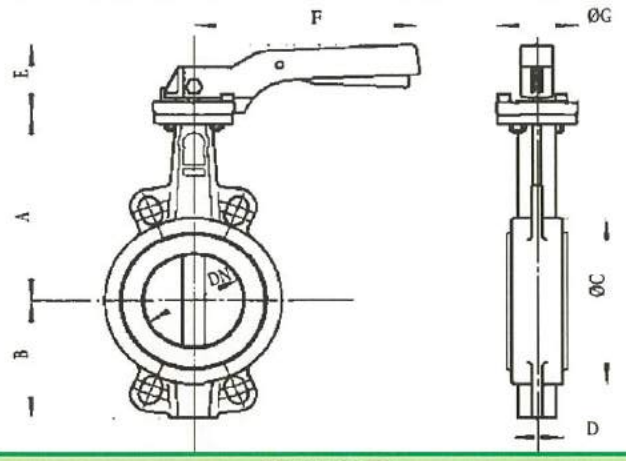

PART & MATERIAL		
S/NO	PART NAME	MATERIAL
1	Body	Cast Iron / Ductile Iron
2	Disc	AISI 316 / Ductile Iron with Nickel Plated / Al Bronze
3	Liner	EPDM (RUBBER)

OPERATING CONDITION	
Operating Pressure	16 Bar
Operating Temperature	110 Deg C
Universal Flanges Standard	PN10/16, ANSI 150LBS & JIS 10K

DIMENSION								
NOMINAL PIPE SIZE (DN)		A	B	ΦC	D	E	F	ΦG
MM	INS	MM	MM	MM	MM	MM	MM	MM
25	1	121	53	65	33	70	200	65
32	1¼	121	57	73	33	70	200	65
40	1½	130	61	82	33	70	200	65
50	2	136.5	77	90	43	70	200	65
65	2½	142	87.5	103	46	70	200	65
80	3	158	95	120	46	70	200	65
100	4	180	107	152	52	70	200	65
125	5	192	121.5	180	56	71	278	90
150	6	215	144	207	56	71	278	90
200	8	241.5	171	260	60	40	355	125
250	10	280	205	315	68	44	507	150
300	12	310	235	370	78	44	507	150



TYPICAL APPLICATIONS AND FLUIDS	
APPLICABLE FLUIDS	WATER, WARM WATER, SEA WATER & AIR
TYPICAL APPLICATIONS	PUMPS (SUNCTION & DISCHARGE LINE, AIRCONDITIONING, VENTILATING, CONDENSER PIPING SYSTEMS, MARINE AIR INTAKE ON DIESEL ENGINES, BALLAST LINE

General Description

AFA wafer type butterfly valves are designed for installation between flanges drilled in accordance with DIN, ANSI, JIS & BS standard and with the hand lever operation.

The valve's liner and disc are replaceable and available in various materials for media compatibles. The actuator flange comply to ISO 5211.

AFA butterfly valves are suitable for use with water, warm water, hot water, sea water, air, steam, gas and oil.

Typical application include HVAC, petrochemical processing, oil & gas process, shipbuilding and offshore, fire fighting and sanitary system, food industries, etc.

*For other kinds of applicable fluids except the above, to which the butterfly valve becomes applicable, please kindly consult your supplier or manufacturer.

*Ordering the various kinds of AFA Butterfly Valve, please refer to Order Code for detail.

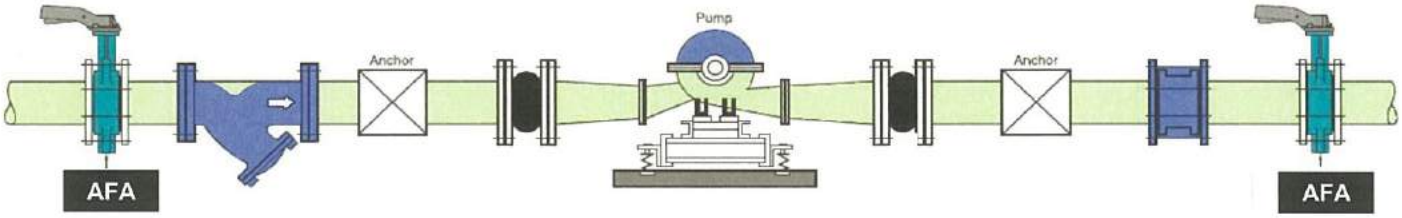

A New Era In Total Solution

AFA - WAFER TYPE BUTTERFLY VALVE

WORM GEAR

FIG BW-G

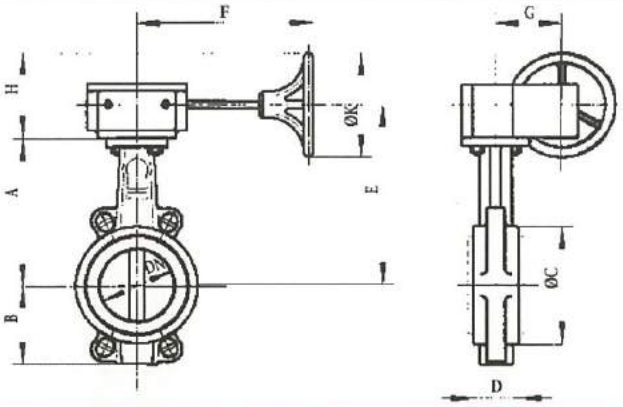

PART & MATERIAL		
S/NO	PART NAME	MATERIAL
1	Body	Cast Iron (GG25) / Ductile Iron (GGG40)
2	Disc	AISI 316 / Ductile Iron with Nickel Plated / Al Bronze
3	Liner	EPDM (Rubber)

OPERATING CONDITION	
Operating Pressure	16 Bar - DN40 to DN300
	10 Bar - DN350 to DN1000
Operating Temperature	110 Deg C
Universal Flanges Standard	PN10/16, ANSI 150LBS & JIS 10K

DIMENSION

NOMINAL PIPE SIZE (DN)		A	B	ΦC	D	E	F	G	H	ΦK
MM	INS	MM	MM	MM	MM	MM	MM	MM	MM	MM
25	1	121	53	65	33	162	156	45	116	150
32	1¼	121	57	73	33	162	156	45	116	150
40	1½	130	61	82	33	171	156	45	116	150
50	2	136.5	77	90	43	177.5	156	45	116	150
65	2½	142	87.5	103	46	183	156	45	116	150
80	3	158	95	120	46	199	156	45	116	150
100	4	180	107	152	52	221	156	45	116	150
125	5	192	121.5	180	56	233	156	45	168	250
150	6	215	144	207	56	256	156	45	168	250
200	8	241.5	171	260	60	284	241	63	192.5	300
250	10	280	205	315	68	319.5	223	78	189.5	300
300	12	310	235	370	78	349.5	223	78	189.5	300
350	14	367	266	418	78	412	223	78	189.5	300
400	16	394	324	470	102	456	270	120	207.9	400
450	18	419	341	525	114	481	270	120	257.9	400
500	20	474	374	570	127	539	339	120	221.5	300
600	24	565	478	697	154	630	339	120	221.5	300
700	28	624	520	800	163	725	367	243	382	400
750	30	660	539	850.9	167	748.7	367	243	381.5	400
800	32	672	591	906	188	785	367	243	382	400
900	36	720	656	1015	203	944	410	278	476	450
1000	40	800	721	1134	216	994	410	278	476	450
1200	48	940	860	1331	276	1228	500	458	528	450



TYPICAL APPLICATIONS AND FLUIDS	
APPLICABLE FLUIDS	WATER, WARM WATER, SEA WATER, AIR & WEAK ACID
TYPICAL APPLICATIONS	PUMPS (SUNCTION & DISCHARGE LINE, AIRCONDITIONING, VENTILATING, CONDENSER PIPING SYSTEMS, MARINE AIR INTAKE ON DIESEL ENGINES, BALLAST LINE

General Description

AFA wafer type butterfly valves are designed for installation between flanges drilled in accordance with DIN, ANSI, JIS & BS standard and with the worm gear operation.

The valve's liner and disc are replaceable and available in various materials for media compatibles. The actuator flange comply to ISO 5211.

AFA butterfly valves are suitable for use with water, warm water, hot water, sea water, air, steam, gas and oil.

Typical application include HVAC, petrochemical processing, oil & gas process, shipbuilding and offshore, fire fighting and sanitary system, food industries, etc.

*For other kinds of applicable fluids except the above, to which the butterfly valve becomes applicable, please kindly consult your supplier or manufacturer.

*Ordering the various kinds of AFA Butterfly Valve, please refer to Order Code for detail.

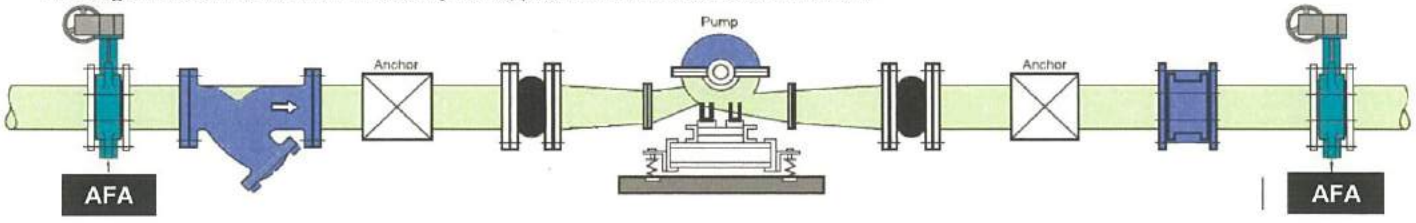

A New Era In Total Solution

AFA WAFER TYPE ELECTRIC OPERATED BUTTERFLY VALVE

FIG BW-M

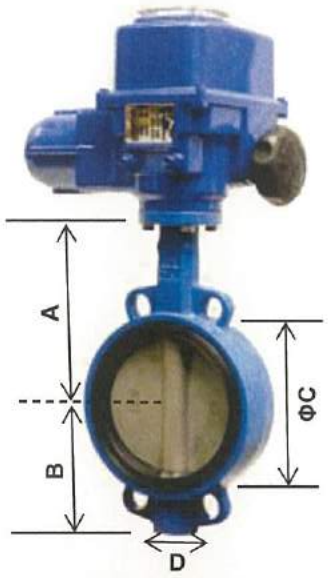

PART & MATERIAL		
S/NO	PART NAME	MATERIAL
1	Body	Ductile Iron(GGG40)
2	Disc	AISI 316
3	Liner	EPDM (Rubber)

OPERATING CONDITION	
Operating Pressure	16 Bar - DN40 to DN300
	10 Bar - DN350 to DN600
Operating Temperature	110°C
Flanges Standard	PN10/16 ANSI 150LBS & JIS 10K
Application	Water / Warm Water

ELECTRIC ACTUATOR INFORMATION	
Type of Actuator	On / Off Type with manual handwheel over-ride
Voltage / Power	50Hz/220VAC/Single Phase (IP67 enclosure)

DIMENSION					
NOMINAL PIPE SIZE (DN)		A	B	ΦC	D
MM	INS	MM	MM	MM	MM
40	1½	130	61	82	33
50	2	136.5	77	90	43
65	2½	142	87.5	103	46
80	3	158	95	120	46
100	4	180	107	152	52
125	5	192	121.5	180	56
150	6	215	144	207	56
200	8	241.5	171	260	60
250	10	280	205	315	68
300	12	310	235	370	78
350	14	337	260	408	78
400	16	363	295	470	102
450	18	400	318	525	114
500	20	437	357	575	127
600	24	498	420	693	157



General Description

AFA Wafer Type Butterfly Valves are designed for installation between flanged drilled in accordance with DIN, ANSI, JIS & BS standard and with the electric actuator operation.
The valve's liner and disc are replaceable and available in various materials for media compatibles. The actuator flange comply to ISO 5211.
AFA Wafer Type Butterfly Valves are suitable for use with water, warm water, hot water, sea water, air, steam, gas and oil. Typical application include HVAC, petrochemical processing, oil & gas process, shipbuilding and offshore, fire-fighting and plumbing system, food industries, etc.
*For other kinds of applicable fluids except the above, to which the butterfly valve becomes applicable, please kindly consult your supplier or manufacturer.
*Ordering the various kinds of AFA Butterfly Valve, please refer to Order Code for detail.

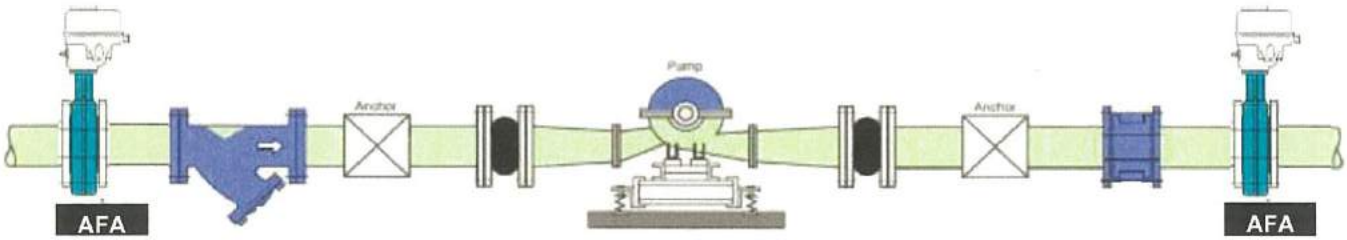

AFA - LUG TYPE BUTTERFLY VALVE

HAND LEVER

FIG BL-L

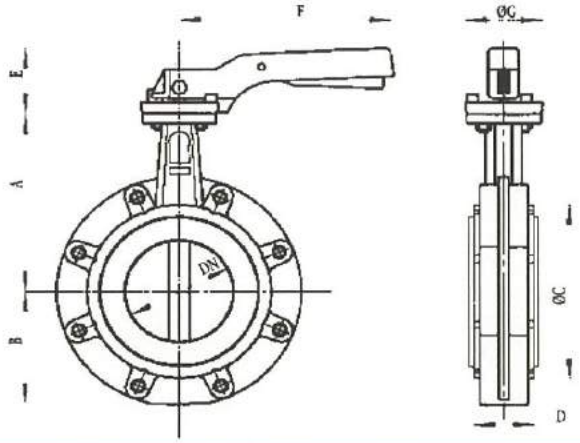

PART & MATERIAL		
S/NO	PART NAME	MATERIAL
1	Body	Cast Iron / Ductile Iron
2	Disc	AISI 316 / Ductile Iron with Nickel Plated / Al Bronze
3	Liner	EPDM (RUBBER)

OPERATING CONDITION	
Operating Pressure	16 Bar
Operating Temperature	110 Deg C
Universal Flanges Standard	PN10/16, ANSI 150LBS & JIS 10K

DIMENSION								
NOMINAL PIPE SIZE (DN)		A	B	ΦC	D	E	F	ΦG
MM	INS	MM	MM	MM	MM	MM	MM	MM
25	1	121	53	65	33	70	200	65
32	1¼	121	57	73	33	70	200	65
40	1½	130	61	82	33	70	200	65
50	2	136.5	77	90	43	70	200	65
65	2½	142	87.5	103	46	70	200	65
80	3	158	95	120	46	70	200	65
100	4	180	107	152	52	70	200	65
125	5	192	121.5	180	56	71	278	90
150	6	215	144	207	56	71	278	90
200	8	241.5	171	260	60	40	355	125
250	10	280	205	315	68	44	507	150
300	12	310	235	370	78	44	507	150



TYPICAL APPLICATIONS AND FLUIDS	
APPLICABLE FLUIDS	WATER, WARM WATER, SEA WATER, AIR & WEAK ACID
TYPICAL APPLICATIONS	PUMPS (SUNCTION & DISCHARGE LINE, AIRCONDITIONING, VENTILATING, CONDENSER PIPING SYSTEMS, MARINE AIR INTAKE ON DIESEL ENGINES, BALLAST LINE

General Description

AFA lug type butterfly valves are designed for installation between flanges drilled in accordance with DIN, ANSI, JIS & BS standard and with the hand lever operation.

The valve's liner and disc are replaceable and available in various materials for media compatibles. The actuator flange comply to ISO 5211.

AFA lug type butterfly valves are suitable for use with water, warm water, hot water, sea water, air, steam, gas and oil.

Typical application include HVAC, petrochemical processing, oil & gas process, shipbuilding and offshore, fire fighting and sanitary system, food industries, etc.

*For other kinds of applicable fluids except the above, to which the butterfly valve becomes applicable, please kindly consult your supplier or manufacturer.

*Ordering the various kinds of AFA Butterfly Valve, please refer to Order Code for detail.

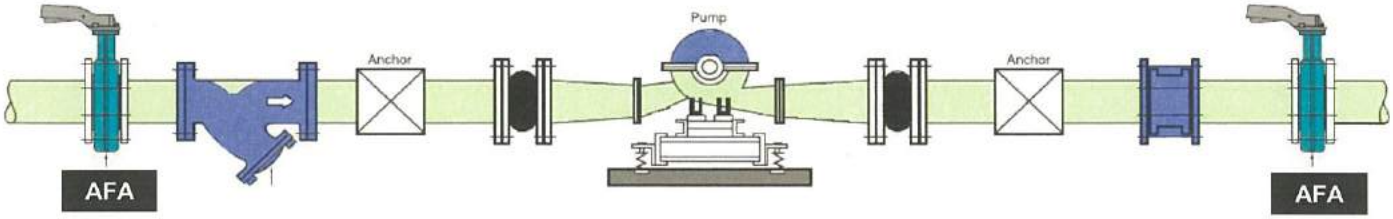

A New Era In Total Solution

AFA - LUG TYPE BUTTERFLY VALVE

WORM GEAR

FIG BL-G

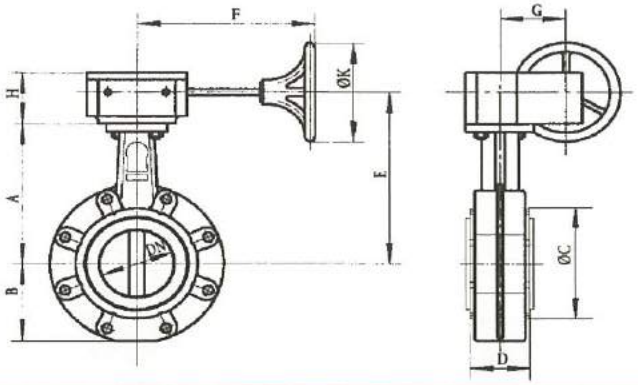

PART & MATERIAL		
S/NO	PART NAME	MATERIAL
1	Body	Cast Iron / Ductile Iron
2	Disc	AISI 316 / Ductile Iron with Nickel Plated / Al Bronze
3	Liner	EPDM (RUBBER)

OPERATING CONDITION	
Operating Pressure	16 Bar - DN40 to DN300
	10 Bar - DN350 to DN1000
Operating Temperature	110 Deg C
Universal Flanges Standard	PN10/16, ANSI 150LBS & JIS 10K

DIMENSION										
NOMINAL PIPE SIZE (DN)		A	B	ΦC	D	E	F	G	H	ΦK
MM	INS	MM	MM	MM	MM	MM	MM	MM	MM	MM
25	1	121	53	65	33	162	156	45	116	150
32	1¼	121	57	73	33	162	156	45	116	150
40	1½	130	61	82	33	171	156	45	116	150
50	2	136.5	77	90	43	177.5	156	45	116	150
65	2½	142	87.5	103	46	183	156	45	116	150
80	3	158	95	120	46	199	156	45	116	150
100	4	180	107	152	52	221	156	45	116	150
125	5	192	121.5	180	56	233	156	45	168	250
150	6	215	144	207	56	256	156	45	168	250
200	8	241.5	171	260	60	284	241	63	192.5	300
250	10	280	205	315	68	319.5	223	78	189.5	300
300	12	310	235	370	78	349.5	223	78	189.5	300
350	14	367	266	418	78	412	223	78	189.5	300
400	16	394	324	470	102	456	270	120	207.9	400
450	18	419	341	525	114	481	270	120	257.9	400
500	20	474	374	570	127	539	339	120	221.5	300
600	24	565	478	697	154	630	339	120	221.5	300
700	28	624	520	800	163	725	367	243	382	400
750	30	660	539	850.9	167	748.7	367	243	381.5	400
800	32	672	591	906	188	785	367	243	382	400
900	36	720	656	1015	203	944	410	278	476	450
1000	40	800	721	1134	216	994	410	278	476	450
1200	48	940	860	1331	276	1228	500	458	528	450



TYPICAL APPLICATIONS AND FLUIDS	
APPLICABLE FLUIDS	WATER, WARM WATER, SEA WATER & AIR
TYPICAL APPLICATIONS	PUMPS (SUNCTION & DISCHARGE LINE, AIRCONDITIONING, VENTILATING, CONDENSER PIPING SYSTEMS, MARINE AIR INTAKE ON DIESEL ENGINES, BALLAST LINE

General Description

AFA lug type butterfly valves are designed for installation between flanges drilled in accordance with DIN, ANSI, JIS & BS standard and with the worm gear operation.

The valve's liner and disc are replaceable and available in various materials for media compatibles. The actuator flange comply to ISO 5211.

AFA lug type butterfly valves are suitable for use with water, warm water, hot water, sea water, air, steam, gas and oil.

Typical application include HVAC, petrochemical processing, oil & gas process, shipbuilding and offshore, fire fighting and sanitary system, food industries, etc.

*For other kinds of applicable fluids except the above, to which the butterfly valve becomes applicable, please kindly consult your supplier or manufacturer.

*Ordering the various kinds of AFA Butterfly Valve, please refer to Order Code for detail.

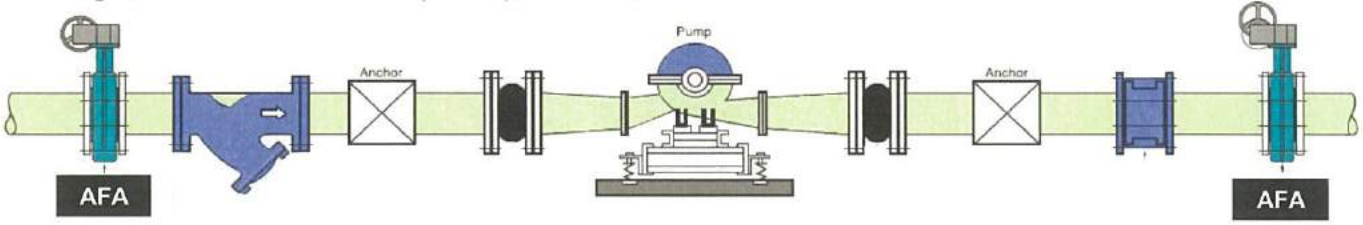

A New Era In Total Solution

AFA - LUG TYPE BUTTERFLY VALVE

HAND LEVER

FIG BL-20L

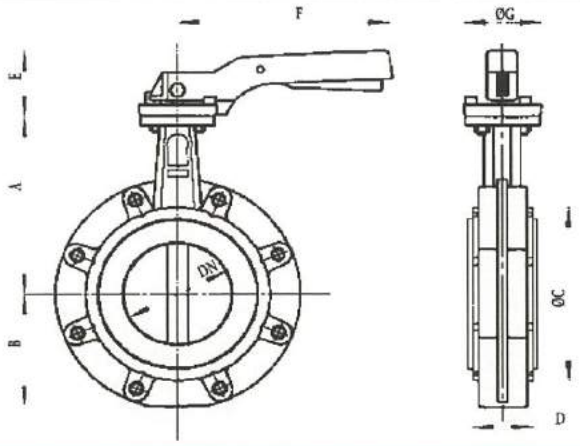

PART & MATERIAL		
S/NO	PART NAME	MATERIAL
1	Body	Ductile Iron
2	Disc	AISI 316 / Ductile Iron with Nickel Plated
3	Liner	EPDM (RUBBER)

OPERATING CONDITION	
Operating Pressure	20 Bar (Non-Shock)
Operating Temperature	110 Deg C
Universal Flanges Standard	PN10/16, ANSI 150LBS & JIS 10K

DIMENSION								
NOMINAL PIPE SIZE (DN)		A	B	ΦC	D	E	F	ΦG
MM	INS	MM	MM	MM	MM	MM	MM	MM
25	1	121	53	65	33	70	200	65
32	1¼	121	57	73	33	70	200	65
40	1½	130	61	82	33	70	200	65
50	2	136.5	77	90	43	70	200	65
65	2½	142	87.5	103	46	70	200	65
80	3	158	95	120	46	70	200	65
100	4	180	107	152	52	70	200	65
125	5	192	121.5	180	56	71	278	90
150	6	215	144	207	56	71	278	90
200	8	241.5	171	260	60	40	355	125
250	10	280	205	315	68	44	507	150
300	12	310	235	370	78	44	507	150



TYPICAL APPLICATIONS AND FLUIDS	
APPLICABLE FLUIDS	WATER, WARM WATER, SEA WATER, AIR & WEAK ACID
TYPICAL APPLICATIONS	PUMPS (SUNCTION & DISCHARGE LINE, AIRCONDITIONING, VENTILATING, CONDENSER PIPING SYSTEMS, MARINE AIR INTAKE ON DIESEL ENGINES, BALLAST LINE

General Description

AFA lug type butterfly valves are designed for installation between flanges drilled in accordance with DIN, ANSI, JIS & BS standard and with the hand lever operation.

The valve's liner and disc are replaceable and available in various materials for media compatibles. The actuator flange comply to ISO 5211.

AFA lug type butterfly valves are suitable for use with water, warm water, hot water, sea water, air, steam, gas and oil.

Typical application include HVAC, petrochemical processing, oil & gas process, shipbuilding and offshore, fire fighting and sanitary system, food industries, etc.

*For other kinds of applicable fluids except the above, to which the butterfly valve becomes applicable, please kindly consult your supplier or manufacturer.

*Ordering the various kinds of AFA Butterfly Valve, please refer to Order Code for detail.

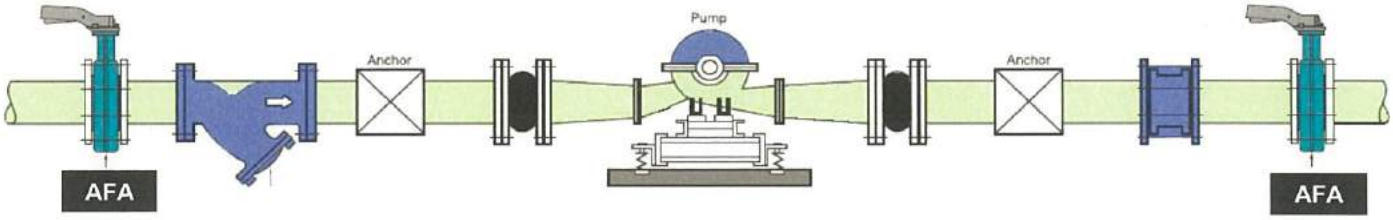

A New Era In Total Solution

AFA - LUG TYPE BUTTERFLY VALVE

WORM GEAR

FIG BL-20G

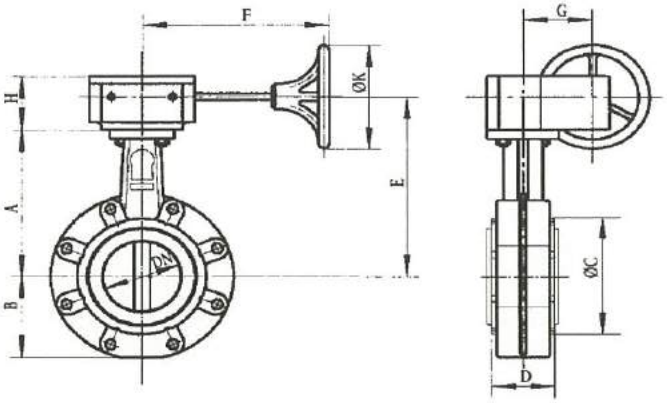

PART & MATERIAL		
S/NO	PART NAME	MATERIAL
1	Body	Ductile Iron
2	Disc	AISI 316 / Ductile Iron with Nickel Plated
3	Liner	EPDM (RUBBER)

OPERATING CONDITION	
Operating Pressure	20 Bar (Non-Shock)
Operating Temperature	110 Deg C
Universal Flanges Standard	PN10/16, ANSI 150LBS & JIS 10K

DIMENSION

NOMINAL PIPE SIZE (DN)		A	B	ΦC	D	E	F	G	H	ΦK
MM	INS	MM	MM	MM	MM	MM	MM	MM	MM	MM
25	1	121	53	65	33	162	156	45	116	150
32	1¼	121	57	73	33	162	156	45	116	150
40	1½	130	61	82	33	171	156	45	116	150
50	2	136.5	77	90	43	177.5	156	45	116	150
65	2½	142	87.5	103	46	183	156	45	116	150
80	3	158	95	120	46	199	156	45	116	150
100	4	180	107	152	52	221	156	45	116	150
125	5	192	121.5	180	56	233	156	45	168	250
150	6	215	144	207	56	256	156	45	168	250
200	8	241.5	171	260	60	284	241	63	192.5	300
250	10	280	205	315	68	319.5	223	78	189.5	300
300	12	310	235	370	78	349.5	223	78	189.5	300



TYPICAL APPLICATIONS AND FLUIDS	
APPLICABLE FLUIDS	WATER, WARM WATER, SEA WATER & AIR
TYPICAL APPLICATIONS	PUMPS (SUNCTION & DISCHARGE LINE, AIRCONDITIONING, VENTILATING, CONDENSER PIPING SYSTEMS, MARINE AIR INTAKE ON DIESEL ENGINES, BALLAST LINE

General Description

AFA lug type butterfly valves are designed for installation between flanges drilled in accordance with DIN, ANSI, JIS & BS standard and with the worm gear operation.
The valve's liner and disc are replaceable and available in various materials for media compatibles. The actuator flange comply to ISO 5211.
AFA lug type butterfly valves are suitable for use with water, warm water, hot water, sea water, air, steam, gas and oil.
Typical application include HVAC, petrochemical processing, oil & gas process, shipbuilding and offshore, fire fighting and sanitary system, food industries, etc.
*For other kinds of applicable fluids except the above, to which the butterfly valve becomes applicable, please kindly consult your supplier or manufacturer.
*Ordering the various kinds of AFA Butterfly Valve, please refer to Order Code for detail.

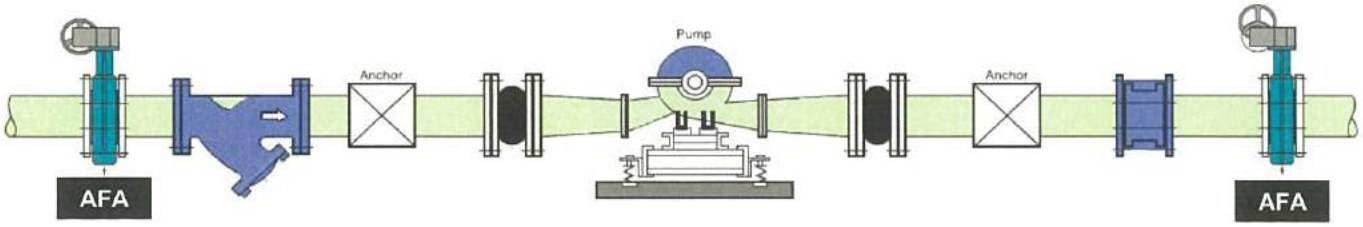

A New Era In Total Solution

AFA® STYLE 99 TFR - UNIVERSAL TYPE®

TWIN SPHERE UNIVERSAL DUCTILE IRON FLANGE

EPDM

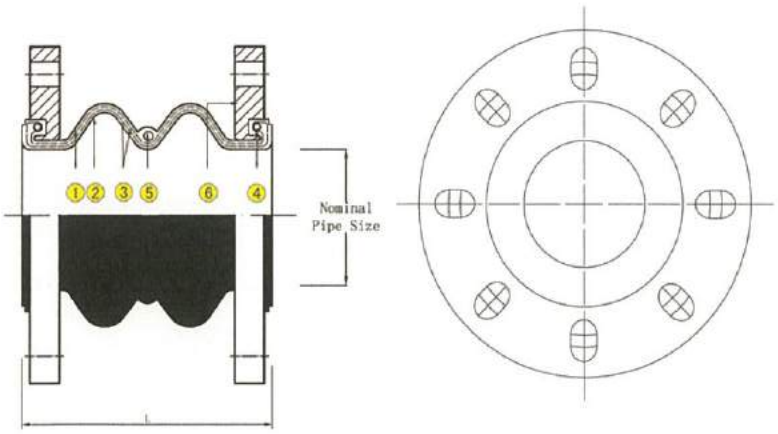

PART & MATERIAL		
S/NO	PART NAME	MATERIAL
1	Body(Outer Layer)	Synthetic (EPDM) Rubber
2	Body(Inner Layer)	Synthetic (EPDM) Rubber
3	Reinforcing Fabric	Nylon Fabric
4	Wire	Hard Steel Wire
5	Centre Ring	Mild Steel
6	Flange	Ductile Iron with Epoxy Coated

OPERATING CONDITION	
Operating Pressure	16 Bar
Operating Temperature	-10 to 80 Deg C
Vacuum Rating	650 MM/HG
Universal Flanges Standard	PN10/16,ANSI 150# & JIS 10K

DIMENSION / MOVEMENT						
NOMINAL PIPE SIZE		NEUTRAL LENGTH L	AXIAL COMPRESSION	AXIAL ELONGATION	LATERAL DEFLECTION	ANGULAR DEFLECTION
MM	INS	MM	MM	MM	+OR -MM	+OR - DEG
25/32	1¼	150	10	15	12	15
40	1½	150	10	15	12	15
50	2	150	10	15	12	15
65	2½	150	10	15	12	15
80	3	150	10	15	12	15
100	4	200	15	20	16	15
125	5	200	15	20	16	15
150	6	200	15	20	16	15
200	8	220	15	20	16	15
250	10	220	15	20	16	15
300	12	220	15	20	16	15



OPERATING TEMPERATURE AGAINST OPERATING PRESSURE					
OPERATING TEMPERATURE °C	AMBIENT	50	60	70	80
MAXIMUM OPERATING PRESSURE(BAR)	16	12.4	10	7.5	6.5

TYPICAL APPLICATIONS AND FLUIDS	
APPLICABLE FLUIDS	WATER, WARM WATER, SEA WATER & AIR
TYPICAL APPLICATIONS	PUMPS(SUNCTION & DISCHARGE LINE, AIRCONDITIONING, VENTILATING, CONDENSER PIPING SYSTEMS, MARINE AIR INTAKE ON DIESEL ENGINES, BALLAST LINE

NOTES

- Higher temperatures affect movement and pressure. As temperature increases, rated values must be reduced accordingly.
- Pressures shown are recommended "operating", test pressure is 1.5 times "operating".
- Vacuum rating is based on neutral installed length without external load. Products shall not be installed "elongated" on vacuum applications.
- Expansion joints may operate in pipelines or equipments carrying fluids at evaluated temperatures and pressures. Normal precautions shall be taken to make sure these parts are installed correctly and inspected regularly. Precautions shall be taken to protect personnel in the event of leakage or splash.
- For other kinds of applicable fluids, except the above, to which the rubber joint becomes applicable, please kindly consult your supplier or manufacturer.

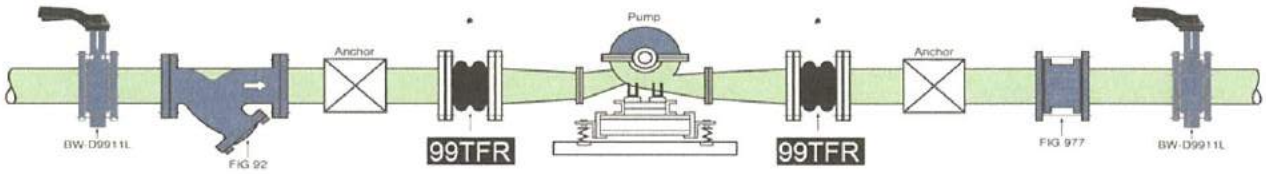

A New Era In Total Solution

AFA -TWIN SPHERE UNIVERSAL FLANGE TYPE

STYLE 99TF

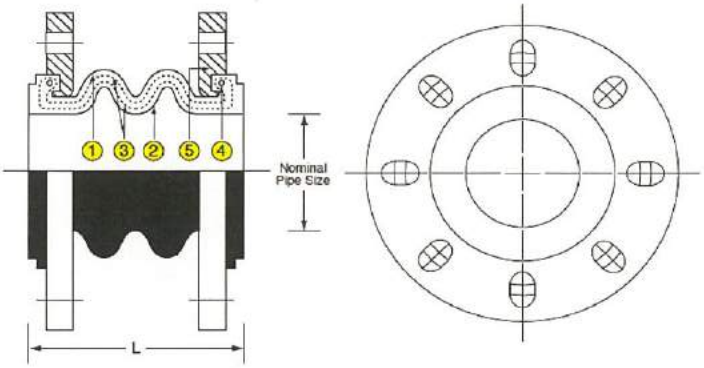

PART & MATERIAL		
S/NO	PART NAME	MATERIAL
1	Body (Outer Layer)	Special Synthetic Rubber (EPDM)
2	Body (Inner Layer)	Special Synthetic Rubber (EPDM)
3	Reinforcing Fabric	Nylon Fabric
4	Wire	Hard Steel Wire
5	Flange / Universal	Ductile Iron with Epoxy Coated

OPERATING CONDITION	
Operating Pressure	16 Bar
Operating Temperature	-10 to 80 Deg C
Vacuum Rating	650 MM/HG
Universal Flanges Standard	PN10/16, ANSI 150# & JIS 10K

DIMENSION / MOVEMENT						
NOMINAL PIPE SIZE		NEUTRAL LENGTH L	AXIAL COMPRESSION	AXIAL ELONGATION	LATERAL DEFLECTION	ANGULAR DEFLECTION
MM	INS	MM	MM	MM	+ OR - MM	+ OR - DEG
20	¾	120	15	10	15	20
25	1	120	15	10	15	20
32	1¼	175	25	15	20	30
40	1½	175	25	15	20	30
50	2	175	25	15	20	30
65	2½	175	25	15	20	30
80	3	175	25	15	20	30
100	4	225	30	20	25	30
125	5	225	30	20	25	30
150	6	225	30	20	25	30
200	8	325	40	25	30	30
250	10	325	40	25	30	30
300	12	325	40	25	30	30

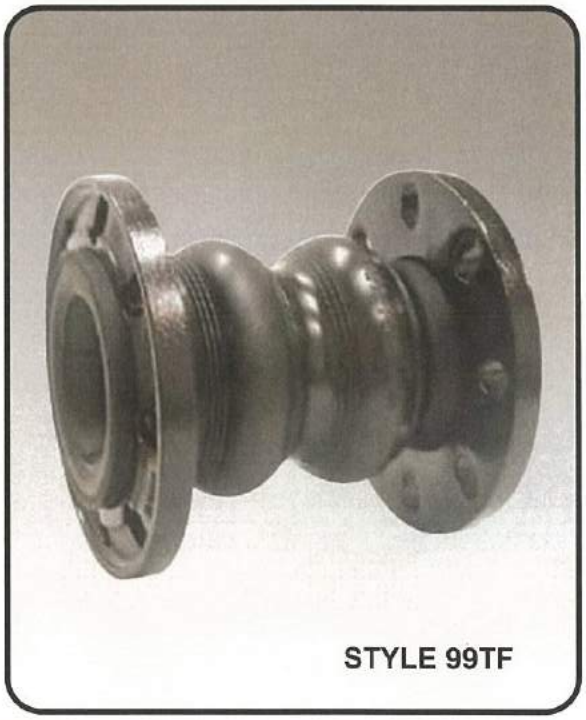

OPERATING TEMPERATURE AGAINST OPERATING PRESSURE					
OPERATING TEMPERATURE °C	AMBIENT	50	60	70	80
MAXIMUM OPERATING PRESSURE (BAR)	16	12.4	10	7.5	6.5

TYPICAL APPLICATIONS AND FLUIDS	
APPLICABLE FLUIDS	WATER, WARM WATER & SEA WATER
TYPICAL APPLICATIONS	PUMPS (SUNCTION & DISCHARGE LINE, AIRCONDITIONING, VENTILATING, CONDENSER PIPING SYSTEMS, MARINE AIR INTAKE ON DIESEL ENGINES, BALLAST LINE

NOTES

- Higher temperatures affect movement and pressure. As temperature increases, rated values must be reduced accordingly.
- Pressures shown are recommended "operating", test pressure is 1.5 times "operating".
- Vacuum rating is based on neutral installed length without external load. Products shall not be installed "elongated" on vacuum applications.
- Expansion joints may operate in pipelines or equipments carrying fluids at evaluated temperatures and pressures. Normal precautions shall be taken to make sure these parts are installed correctly and inspected regularly. Precautions shall be taken to protect personnel in the event of leakage or splash.
- For other kinds of applicable fluids, except the above, to which the rubber joint becomes applicable, please kindly consult your supplier or manufacturer.

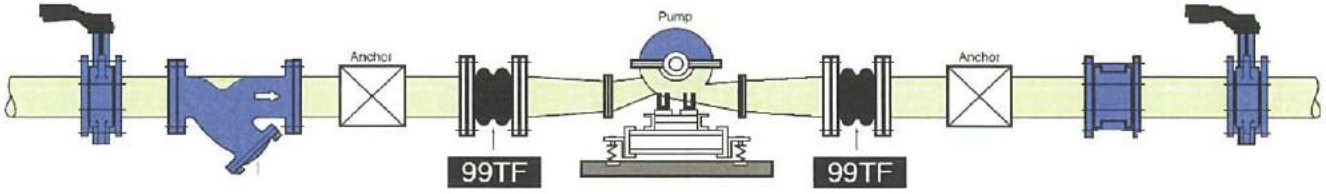

A New Era In Total Solution

AFA - TWIN SPHERE STEEL FLANGE TYPE

STYLE 99 TF

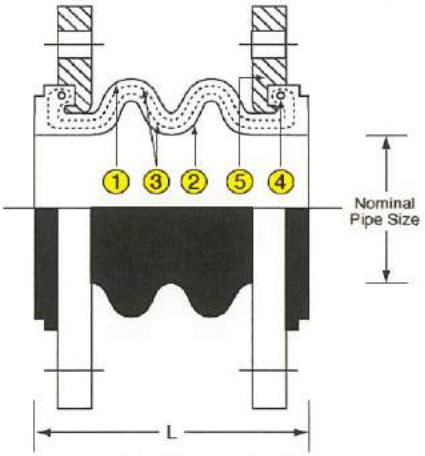

PART & MATERIAL		
S/NO	PART NAME	MATERIAL
1	Body (Outer Layer)	Special Synthetic Rubber (EPDM)
2	Body (Inner Layer)	Special Synthetic Rubber (EPDM)
3	Reinforcing Fabric	Nylon Fabric
4	Wire	Hard Steel Wire
5	Flange	Carbon Steel (Galv'd)

OPERATING CONDITION	
Operating Pressure	10 Bar
Operating Temperature	-10 to 80 Deg C
Vacuum Rating	650 MM/HG
Flanges Standard	DIN, ANSI, JIS & BS

DIMENSION / MOVEMENT						
NOMINAL PIPE SIZE		NEUTRAL LENGTH L	AXIAL COMPRESSION	AXIAL ELONGATION	LATERAL DEFLECTION	ANGULAR DEFLECTION
MM	INS	MM	MM	MM	+ OR - MM	+ OR - DEG
350	14	350	40	25	30	30
400	16	350	40	25	30	30
450	18	350	40	25	30	30
500	20	350	40	25	30	30
600	24	350	40	25	30	30

OPERATING TEMPERATURE AGAINST OPERATING PRESSURE					
OPERATING TEMPERATURE °C	AMBIENT	50	60	70	80
MAXIMUM OPERATING PRESSURE (BAR)	10	7.5	6.2	5.0	4.0



TYPICAL APPLICATIONS AND FLUIDS	
APPLICABLE FLUIDS	WATER, WARM WATER & SEA WATER
TYPICAL APPLICATIONS	PUMPS (SUNCTION & DISCHARGE LINE, AIRCONDITIONING, VENTILATING, CONDENSER PIPING SYSTEMS, MARINE AIR INTAKE ON DIESEL ENGINES, BALLAST LINE

NOTES

- Higher temperatures affect movement and pressure. As temperature increases, rated values must be reduced accordingly.
- Pressures shown are recommended "operating", test pressure is 1.5 times "operating".
- Vacuum rating is based on neutral installed length without external load. Products shall not be installed "elongated" on vacuum applications.
- Expansion joints may operate in pipelines or equipments carrying fluids at evaluated temperatures and pressures. Normal precautions shall be taken to make sure these parts are installed correctly and inspected regularly. Precautions shall be taken to protect personnel in the event of leakage or splash.
- For other kinds of applicable fluids, except the above, to which the rubber joint becomes applicable, please kindly consult your supplier or manufacturer.

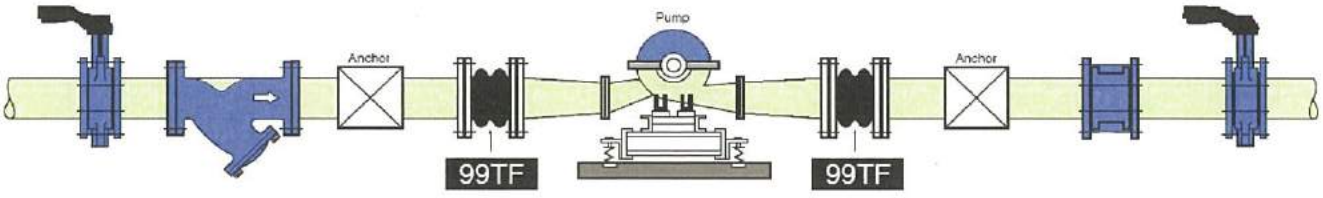

A New Era In Total Solution

AFA - SINGLE SPHERE UNIVERSAL FLANGE TYPE

STYLE 99SF

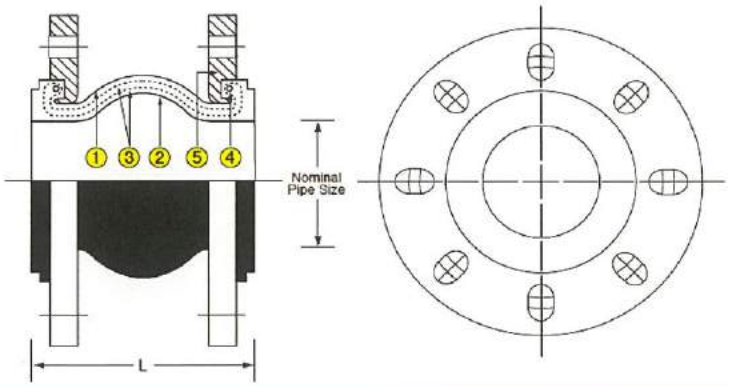

PART & MATERIAL		
S/NO	PART NAME	MATERIAL
1	Body (Outer Layer)	Special Synthetic Rubber (EPDM)
2	Body (Inner Layer)	Special Synthetic Rubber (EPDM)
3	Reinforcing Fabric	Nylon Fabric
4	Wire	Hard Steel Wire
5	Flange / Universal	Ductile Iron with Epoxy Coated

OPERATING CONDITION	
Operating Pressure	16 Bar
Operating Temperature	-10 to 80 Deg C
Vacuum Rating	700 MM/HG
Universal Flanges Standard	PN10/16, ANSI 150# & JIS 10K

DIMENSION / MOVEMENT						
NOMINAL PIPE SIZE		NEUTRAL LENGTH L	AXIAL COMPRESSION	AXIAL ELONGATION	LATERAL DEFLECTION	ANGULAR DEFLECTION
MM	INS	MM	MM	MM	+ OR - MM	+ OR - DEG
20	¾	93	8	4	8	15
25	1	93	8	4	8	15
32	1¼	93	8	4	8	15
40	1½	93	8	4	8	15
50	2	99	8	4	8	15
65	2½	108	12	6	10	15
80	3	116	12	6	10	15
100	4	129	12	10	12	15
125	5	142	16	10	12	15
150	6	156	16	10	12	15
200	8	177	20	14	18	15
250	10	206	20	14	18	15
300	12	217	20	14	18	15

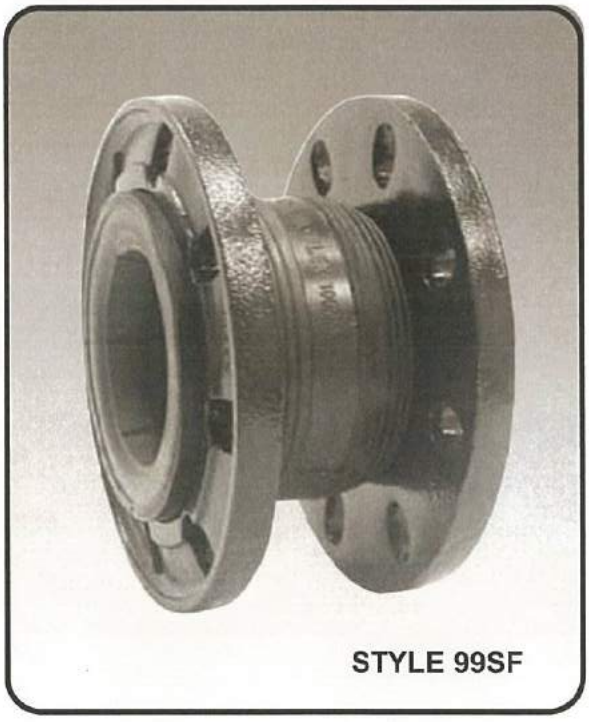

OPERATING TEMPERATURE AGAINST OPERATING PRESSURE					
OPERATING TEMPERATURE °C	AMBIENT	50	60	70	80
MAXIMUM OPERATING PRESSURE (BAR)	16	12.4	10	7.5	6.5

TYPICAL APPLICATIONS AND FLUIDS	
APPLICABLE FLUIDS	WATER, WARM WATER, SEA WATER & AIR
TYPICAL APPLICATIONS	PUMPS (SUNCTION & DISCHARGE LINE, AIRCONDITIONING, VENTILATING, CONDENSER PIPING SYSTEMS, MARINE AIR INTAKE ON DIESEL ENGINES, BALLAST LINE

NOTES

- Higher temperatures affect movement and pressure. As temperature increases, rated values must be reduced accordingly.
- Pressures shown are recommended "operating", test pressure is 1.5 times "operating".
- Vacuum rating is based on neutral installed length without external load. Products shall not be installed "elongated" on vacuum applications.
- Expansion joints may operate in pipelines or equipments carrying fluids at evaluated temperatures and pressures. Normal precautions shall be taken to make sure these parts are installed correctly and inspected regularly. Precautions shall be taken to protect personnel in the event of leakage or splash.
- For other kinds of applicable fluids, except the above, to which the rubber joint becomes applicable, please kindly consult your supplier or manufacturer.

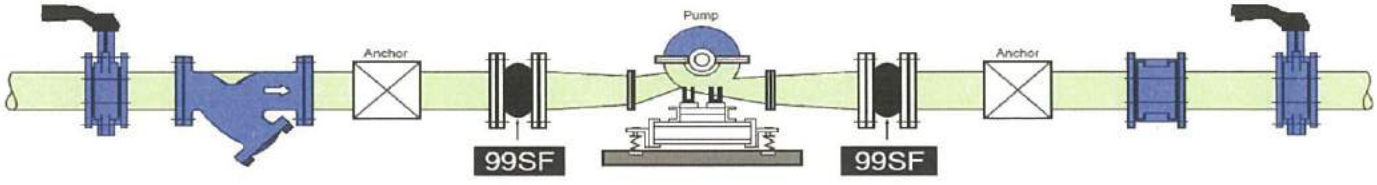

A New Era In Total Solution

AFA - SINGLE SPHERE STEEL FLANGE TYPE

STYLE 99 SF

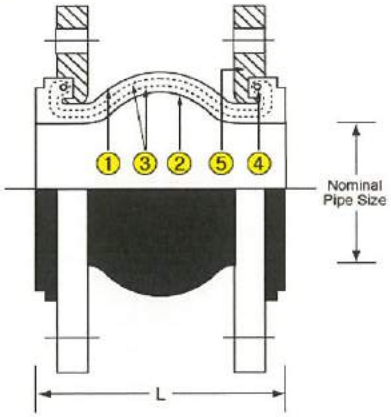

PART & MATERIAL		
S/NO	PART NAME	MATERIAL
1	Body (Outer Layer)	Special Synthetic Rubber (EPDM)
2	Body (Inner Layer)	Special Synthetic Rubber (EPDM)
3	Reinforcing Fabric	Nylon Fabric
4	Wire	Hard Steel Wire
5	Flange	Carbon Steel (Galv'd)

OPERATING CONDITION	
Operating Pressure	See Table Below
Operating Temperature	-10 to 80 Deg C
Vacuum Rating	700 MM/HG
Flanges Standard	DIN, ANSI, JIS & BS

DIMENSION / MOVEMENT							
NOMINAL PIPE SIZE		NEUTRAL LENGTH L	AXIAL COMPRESSION	AXIAL ELONGATION	LATERAL DEFLECTION	ANGULAR DEFLECTION	MAXIMUM OPERATING PRESSURE
MM	INS	MM	MM	MM	+ OR - MM	+ OR - DEG	BAR
350	14	266	25	16	18	15	10
400	16	266	25	16	18	15	10
450	18	200	20	12	18	15	10
500	20	200	20	12	18	15	10
600	24	250	20	12	18	15	10
700	28	250	20	12	18	10	8
750	30	250	20	12	18	10	8
800	32	250	20	12	18	8	8
900	36	250	20	12	18	8	8
1000	40	300	20	12	18	8	6
1100	44	300	20	12	18	6	6
1200	48	300	20	12	18	6	6



OPERATING TEMPERATURE AGAINST OPERATING PRESSURE					
OPERATING TEMPERATURE °C	AMBIENT	50	60	70	80
MAXIMUM OPERATING PRESSURE (BAR)	10	7.5	6.2	5.0	4.0
	8	6.0	5.0	4.0	3.2
	6	4.5	3.5	3.0	2.5

TYPICAL APPLICATIONS AND FLUIDS	
APPLICABLE FLUIDS	WATER, WARM WATER & SEA WATER
TYPICAL APPLICATIONS	PUMPS (SUNCTION & DISCHARGE LINE, AIRCONDITIONING, VENTILATING, CONDENSER PIPING SYSTEMS, MARINE AIR INTAKE ON DIESEL ENGINES, BALLAST LINE

NOTES

- Higher temperatures affect movement and pressure. As temperature increases, rated values must be reduced accordingly.
- Pressures shown are recommended "operating", test pressure is 1.5 times "operating".
- Vacuum rating is based on neutral installed length without external load. Products shall not be installed "elongated" on vacuum applications.
- Expansion joints may operate in pipelines or equipments carrying fluids at evaluated temperatures and pressures. Normal precautions shall be taken to make sure these parts are installed correctly and inspected regularly. Precautions shall be taken to protect personnel in the event of leakage or splash.
- For other kinds of applicable fluids, except the above, to which the rubber joint becomes applicable, please kindly consult your supplier or manufacturer.

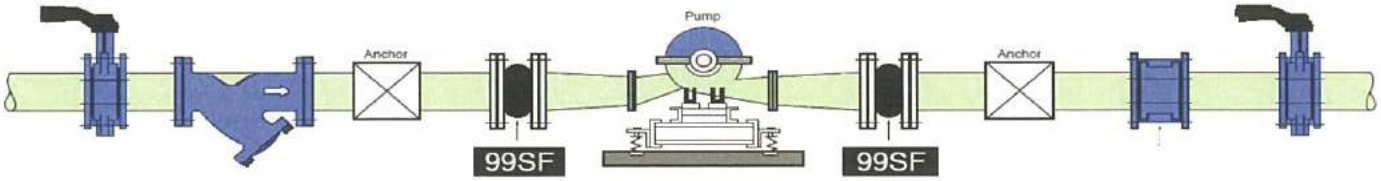

A New Era In Total Solution

AFA - SINGLE SPHERE FLANGE - CONTROL ROD UNIT

STYLE 99 SSHDC

20 BAR

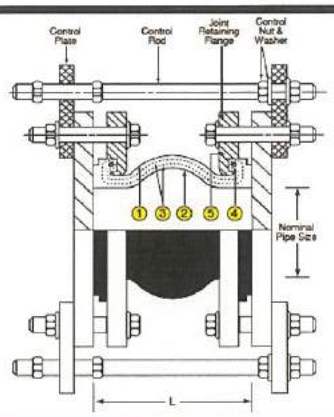

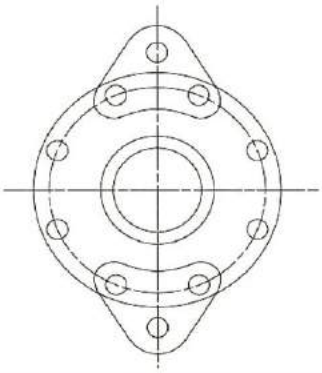

PART & MATERIAL		
S/NO	PART NAME	MATERIAL
1	Body (Outer Layer)	Special Synthetic Rubber (EPDM)
2	Body (Inner Layer)	Special Synthetic Rubber (EPDM)
3	Reinforcing Fabric	Nylon Fabric
4	Wire	Hard Steel Wire
5	Flange	Mild Steel (Galv'd)

OPERATING CONDITION	
Operating Pressure	20 Bar
Operating Temperature	-10 to 80 Deg C
Vacuum Rating	700 MM/HG
Universal Flanges Standard	ANSI, JIS

DIMENSION / MOVEMENT						
NOMINAL PIPE SIZE		NEUTRAL LENGTH L	AXIAL COMPRESSION	AXIAL ELONGATION	LATERAL DEFLECTION	ANGULAR DEFLECTION
MM	INS	MM	MM	MM	+ OR - MM	+ OR - DEG
32	1¼	125	12	10	12	15
40	1½	125	12	10	12	15
50	2	125	12	10	12	15
65	2½	125	12	10	12	15
80	3	125	12	10	12	15
100	4	125	12	10	12	15
125	5	125	12	10	12	15
150	6	125	12	10	12	15
200	8	125	12	10	12	15
250	10	125	12	10	12	15
300	12	125	12	10	12	15
400	16	266	25	16	18	15



OPERATING TEMPERATURE AGAINST OPERATING PRESSURE					
OPERATING TEMPERATURE °C	AMBIENT	50	60	70	80
MAXIMUM OPERATING PRESSURE (BAR)	20	15	12.4	10	7.5

TYPICAL APPLICATIONS AND FLUIDS	
APPLICABLE FLUIDS	WATER, WARM WATER & SEA WATER
TYPICAL APPLICATIONS	PUMPS (SUNCTION & DISCHARGE LINE, AIRCONDITIONING, VENTILATING, CONDENSER PIPING SYSTEMS, MARINE AIR INTAKE ON DIESEL ENGINES, BALLAST LINE

NOTES

- Higher temperatures affect movement and pressure. As temperature increases, rated values must be reduced accordingly.
- Pressures shown are recommended "operating", test pressure is 1.5 times "operating".
- Vacuum rating is based on neutral installed length without external load. Products shall not be installed "elongated" on vacuum applications.
- Expansion joints may operate in pipelines or equipments carrying fluids at evaluated temperatures and pressures. Normal precautions shall be taken to make sure these parts are installed correctly and inspected regularly. Precautions shall be taken to protect personnel in the event of leakage or splash.
- For other kinds of applicable fluids, except the above, to which the rubber joint becomes applicable, please kindly consult your supplier or manufacturer.

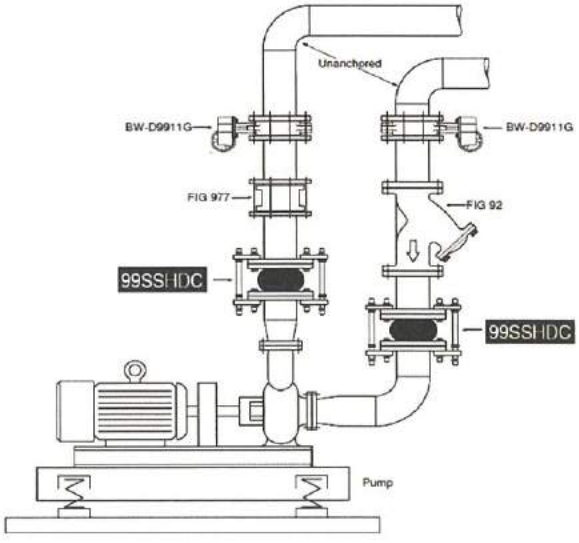

A New Era In Total Solution

AFA - SINGLE SPHERE FLANGE - CONTROL ROD UNIT

STYLE 99 SSHDC

25 BAR

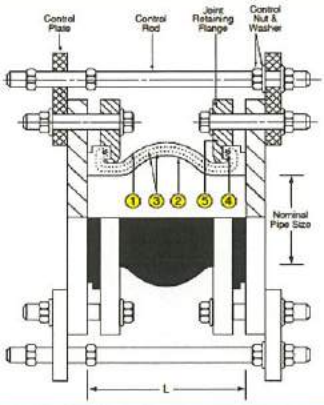

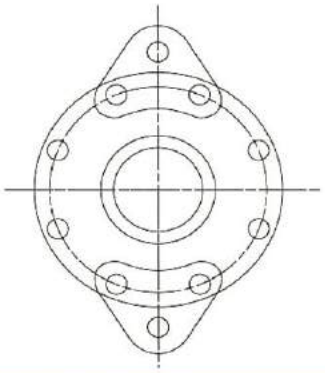

PART & MATERIAL		
S/NO	PART NAME	MATERIAL
1	Body (Outer Layer)	Special Synthetic Rubber (EPDM)
2	Body (Inner Layer)	Special Synthetic Rubber (EPDM)
3	Reinforcing Fabric	Nylon Fabric
4	Wire	Hard Steel Wire
5	Flange	Mild Steel (Galv'd)

OPERATING CONDITION	
Operating Pressure	25 Bar
Operating Temperature	-10 to 80 Deg C
Vacuum Rating	700 MM/HG
Universal Flanges Standard	ANSI, JIS

DIMENSION / MOVEMENT						
NOMINAL PIPE SIZE		NEUTRAL LENGTH L	AXIAL COMPRESSION	AXIAL ELONGATION	LATERAL DEFLECTION	ANGULAR DEFLECTION
MM	INS	MM	MM	MM	+ OR - MM	+ OR - DEG
32	1¼	125	12	10	12	15
40	1½	125	12	10	12	15
50	2	125	12	10	12	15
65	2½	125	12	10	12	15
80	3	125	12	10	12	15
100	4	125	12	10	12	15
125	5	125	12	10	12	15
150	6	125	12	10	12	15
200	8	125	12	10	12	15
250	10	125	12	10	12	15
300	12	125	12	10	12	15
400	16	266	25	16	18	15



OPERATING TEMPERATURE AGAINST OPERATING PRESSURE					
OPERATING TEMPERATURE °C	AMBIENT	50	60	70	80
MAXIMUM OPERATING PRESSURE (BAR)	25	15	12.4	10	7.5

TYPICAL APPLICATIONS AND FLUIDS	
APPLICABLE FLUIDS	WATER, WARM WATER & SEA WATER
TYPICAL APPLICATIONS	PUMPS (SUNCTION & DISCHARGE LINE, AIRCONDITIONING, VENTILATING, CONDENSER PIPING SYSTEMS, MARINE AIR INTAKE ON DIESEL ENGINES, BALLAST LINE

NOTES

- Higher temperatures affect movement and pressure. As temperature increases, rated values must be reduced accordingly.
- Pressures shown are recommended "operating", test pressure is 1.5 times "operating".
- Vacuum rating is based on neutral installed length without external load. Products shall not be installed "elongated" on vacuum applications.
- Expansion joints may operate in pipelines or equipments carrying fluids at evaluated temperatures and pressures. Normal precautions shall be taken to make sure these parts are installed correctly and inspected regularly. Precautions shall be taken to protect personnel in the event of leakage or splash.
- For other kinds of applicable fluids, except the above, to which the rubber joint becomes applicable, please kindly consult your supplier or manufacturer.

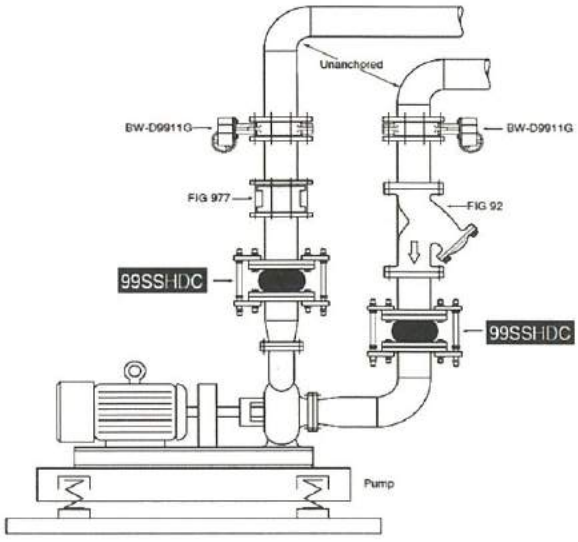

A New Era In Total Solution

AFA® AFA - TWIN SPHERE DUCTILE IRON FLANGE SCREW TYPE

STYLE 99 UF

16 BAR

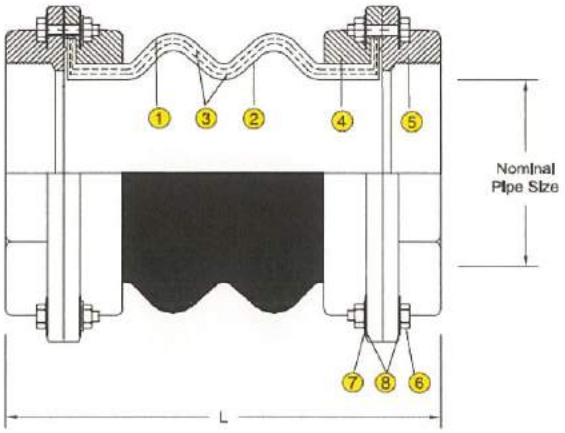

PART & MATERIAL		
S/NO	PART NAME	MATERIAL
1	Body (Outer Layer)	Special Synthetic Rubber (EPDM)
2	Body (Inner Layer)	Special Synthetic Rubber (EPDM)
3	Reinforcing Fabric	Nylon Fabric
4	Union Flange	Ductile Iron (Galv'd)
5	Flange Screw	Ductile Iron (Galv'd)
6	Bolt & Nut	Steel (Galv'd)
7	Spring Washer	Steel (Galv'd)
8	Flat Washer	Steel (Galv'd)

OPERATING CONDITION	
Operating Pressure	16 Bar
Operating Temperature	-10 to 80 Deg C
Vacuum Rating	500 MM/HG
Flange Screw	BSP & NPT Threaded

DIMENSION / MOVEMENT						
NOMINAL PIPE SIZE		NEUTRAL LENGTH L	AXIAL COMPRESSION	AXIAL ELONGATION	LATERAL DEFLECTION	ANGULAR DEFLECTION
MM	INS	MM	MM	MM	+ OR - MM	+ OR - DEG
15	½	167	22	6	22	30
20	¾	167	22	6	22	30
25	1	173	22	6	22	30
32	1¼	181	22	6	22	30
40	1½	182	22	6	22	30
50	2	185	22	6	22	20
65	2½	208	22	6	22	15
80	3	241	22	6	22	15



OPERATING TEMPERATURE AGAINST OPERATING PRESSURE					
OPERATING TEMPERATURE °C	AMBIENT	50	60	70	80
MAXIMUM OPERATING PRESSURE (BAR)	16 (BAR)	9.6	7.5	6.2	5.0

TYPICAL APPLICATIONS AND FLUIDS	
APPLICABLE FLUIDS	WATER, WARM WATER & SEA WATER
TYPICAL APPLICATIONS	PUMPS (SUNCTION & DISCHARGE LINE, AIRCONDITIONING, VENTILATING, CONDENSER PIPING SYSTEMS, MARINE AIR INTAKE ON DIESEL ENGINES, BALLAST LINE

NOTES

- Higher temperatures affect movement and pressure. As temperature increases, rated values must be reduced accordingly.
- Pressures shown are recommended "operating", test pressure is 1.5 times "operating".
- Vacuum rating is based on neutral installed length without external load. Products shall not be installed "elongated" on vacuum applications.
- Expansion joints may operate in pipelines or equipments carrying fluids at evaluated temperatures and pressures. Normal precautions shall be taken to make sure these parts are installed correctly and inspected regularly. Precautions shall be taken to protect personnel in the event of leakage or splash.
- For other kinds of applicable fluids, except the above, to which the rubber joint becomes applicable, please kindly consult your supplier or manufacturer.

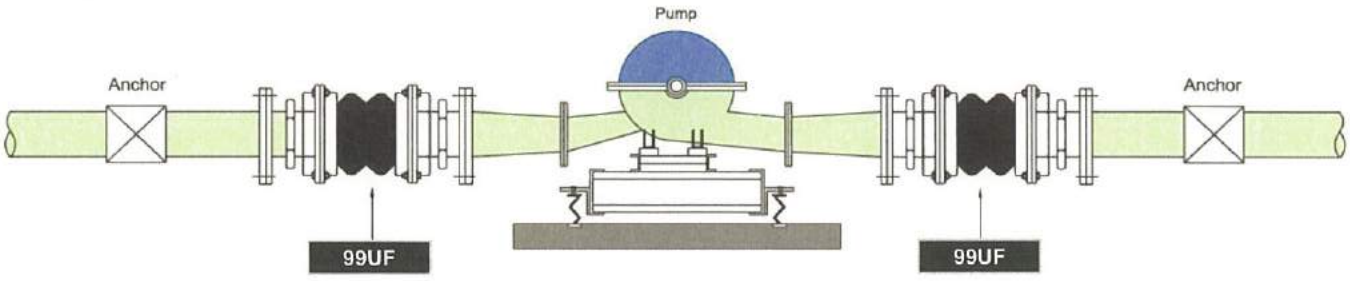

A New Era In Total Solution

AFA® AFA - TWIN SPHERE DUCTILE IRON FLANGE SCREW TYPE

STYLE 99 UF

20 BAR

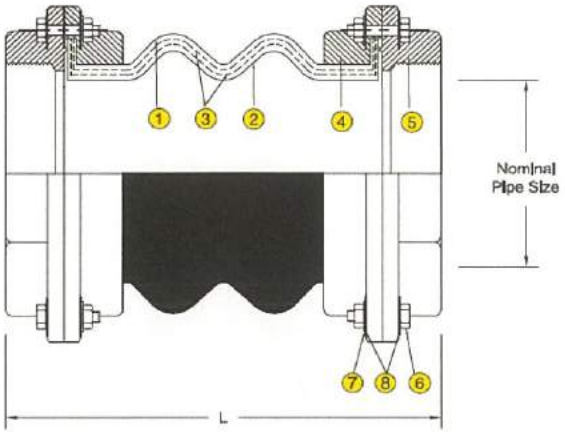

PART & MATERIAL		
S/NO	PART NAME	MATERIAL
1	Body (Outer Layer)	Special Synthetic Rubber (EPDM)
2	Body (Inner Layer)	Special Synthetic Rubber (EPDM)
3	Reinforcing Fabric	Nylon Fabric
4	Union Flange	Ductile Iron (Galv'd)
5	Flange Screw	Ductile Iron (Galv'd)
6	Bolt & Nut	Steel (Galv'd)
7	Spring Washer	Steel (Galv'd)
8	Flat Washer	Steel (Galv'd)

OPERATING CONDITION	
Operating Pressure	20 Bar
Operating Temperature	-10 to 80 Deg C
Vacuum Rating	500 MM/HG
Flange Screw	BSP Threaded

DIMENSION / MOVEMENT						
NOMINAL PIPE SIZE		NEUTRAL LENGTH L	AXIAL COMPRESSION	AXIAL ELONGATION	LATERAL DEFLECTION	ANGULAR DEFLECTION
MM	INS	MM	MM	MM	+ OR - MM	+ OR - DEG
15	½	167	22	6	22	30
20	¾	167	22	6	22	30
25	1	173	22	6	22	30
32	1¼	181	22	6	22	30
40	1½	182	22	6	22	30
50	2	185	22	6	22	20
65	2½	208	22	6	22	15
80	3	241	22	6	22	15

OPERATING TEMPERATURE AGAINST OPERATING PRESSURE					
OPERATING TEMPERATURE °C	AMBIENT	50	60	70	80
MAXIMUM OPERATING PRESSURE (BAR)	20 (BAR)	15	12.4	10	7.5



TYPICAL APPLICATIONS AND FLUIDS	
APPLICABLE FLUIDS	WATER, WARM WATER & SEA WATER
TYPICAL APPLICATIONS	PUMPS (SUNCTION & DISCHARGE LINE, AIRCONDITIONING, VENTILATING, CONDENSER PIPING SYSTEMS, MARINE AIR INTAKE ON DIESEL ENGINES, BALLAST LINE

NOTES

- Higher temperatures affect movement and pressure. As temperature increases, rated values must be reduced accordingly.
- Pressures shown are recommended "operating", test pressure is 1.5 times "operating".
- Vacuum rating is based on neutral installed length without external load. Products shall not be installed "elongated" on vacuum applications.
- Expansion joints may operate in pipelines or equipments carrying fluids at evaluated temperatures and pressures. Normal precautions shall be taken to make sure these parts are installed correctly and inspected regularly. Precautions shall be taken to protect personnel in the event of leakage or splash.
- For other kinds of applicable fluids, except the above, to which the rubber joint becomes applicable, please kindly consult your supplier or manufacturer.

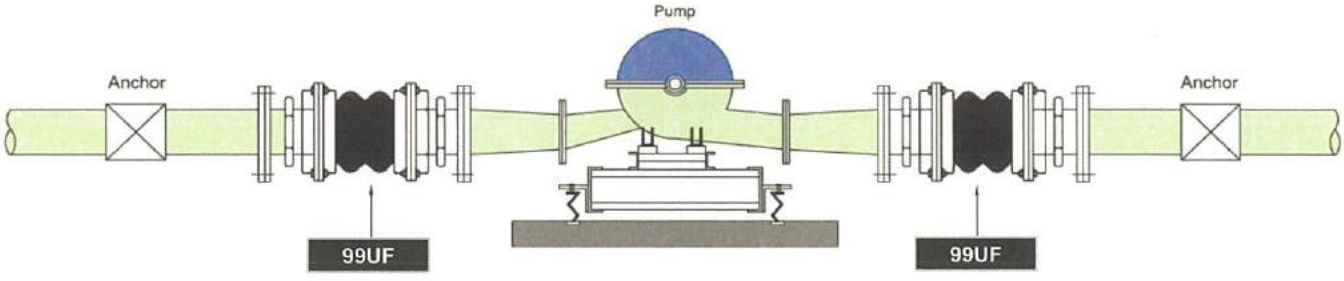

A New Era In Total Solution

PN16 BRASS GATE VALVE
NON-RISING STEM, THREADED ENDS

FIG 50G



WORKING CONDITION

WORKING PRESSURE : 16 BAR

WORKING TEMPERATURE : -10°C TO 100°C

MATERIAL

PART NAME	MATERIAL
BODY	BRASS
BONNET	BRASS
STEM	BRASS
WEDGE	BRASS
HANDWHEEL	ALUMINIUM

DIMENSIONS

VALVE SIZE							
	INCH	½"	¾"	1"	1¼"	1½"	2"
	MM	15	20	25	32	40	50

PN16 BRONZE GATE VALVE
NON-RISING STEM, THREADED ENDS

FIG 94G



WORKING CONDITION

WORKING PRESSURE : 16 BAR

WORKING TEMPERATURE : -10°C TO 100°C

MATERIAL

PART NAME	MATERIAL
BODY	BRONZE
BONNET	BRASS
STEM	BRASS
WEDGE	BRASS/DZR BRASS
HANDWHEEL	ALUMINIUM

DIMENSIONS

VALVE SIZE							
	INCH	½"	¾"	1"	1¼"	1½"	2"
	MM	15	20	25	32	40	50

PN20 BRASS SILENT SPRING LOADED CHECK VALVE
THREADED ENDS

FIG 95S

WORKING CONDITION

WORKING PRESSURE : 20 BAR

WORKING TEMPERATURE : -10 C TO 100°C

MATERIAL

PART NAME	MATERIAL
BODY	BRASS
SPRING	STAINLESS STEEL
SEAT	EPDM RUBBER



DIMENSIONS

VALVE SIZE							
INCH	½"	¾"	1"	1¼"	1½"	2"
MM	15	20	25	32	40	50

PN16 & 20 BRASS Y-PATTERN STRAINER
THREADED ENDS

FIG 94Y

WORKING CONDITION

WORKING PRESSURE : 16 BAR & 20 BAR

WORKING TEMPERATURE : -10°C TO 100°C

MATERIAL

PART NAME	MATERIAL
BODY	BRASS
SCREEN	STAINLESS STEEL
CAP	BRASS



DIMENSIONS

VALVE SIZE							
INCH	½"	¾"	1"	1¼"	1½"	2"
MM	15	20	25	32	40	50

PN16 & 20 BRONZE GLOBE VALVE
RISING STEM, THREADED ENDS

FIG 96W

FIG 97W

WORKING CONDITION

WORKING PRESSURE : 16 BAR (FIG 96W)
20 BAR (FIG 97W)

WORKING TEMPERATURE : -10°C TO 100°C



MATERIAL

PART NAME	MATERIAL
BODY	BRONZE
BONNET	BRASS
STEM	BRASS
HANDWHEEL	ALUMINIUM

DIMENSIONS

VALVE SIZE

INCH	½"	¾"	1"	1¼"	1½"	2"
MM	15	20	25	32	40	50

PN20 BRASS BALL VALVE
(FULL BORE) THREADED ENDS

FIG 5A

WORKING CONDITION

WORKING PRESSURE : 20 BAR

WORKING TEMPERATURE : -10°C TO 100°C



MATERIAL

PART NAME	MATERIAL
BODY	BRASS (CHROMED-PLATED)
STEM	BRASS (CHROMED-PLATED)
BALL	BRASS
SEAT	PTFE
HANDWHEEL	PRESSED STEEL

DIMENSIONS

VALVE SIZE

INCH	½"	¾"	1"	1¼"	1½"	2"
MM	15	20	25	32	40	50

AFA®

DIN / EN STANDARD
INDUSTRIAL PRESSURE GAUGES

made in Germany

DIN EN Standard 837-1 / 2
supersedes DIN 16063 / 64

#GP 100.24	Casing steel sheet, black, dia. 100 mm / 4"
#GP 100.24 SS	Casing stainless steel, dia. 100 mm / 4"
#GP 100.14	Casing ABS, black, dia. 100 mm / 4"

Purpose	measurement of positive and negative pressures
Application	for all liquids and gases except for those having high viscosity or which tend to crystalize
Window	acrylic glass - snap-in-window
Dial	aluminium, white (black resp. black/red lettering)
Thread connections	radial / bottom brass G 1/2" BSP - others on request (stainless steel on request)
Measuring system	Cu-alloy: upto 40 bar Bourdon tube, from 60 bar coiled (stainless steel on request)
Mechanism	copper alloy
Ranges	-1.... 600 bar (or equivalent) lb/in^2 — lb/in^2 + bar — feet of water — or others — Class 1.6 kg/cm^2 — inHg — kPA — on request

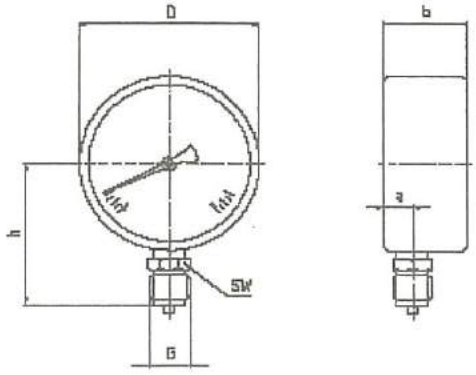



Model	dia. D	b	h	a	SW
GP100.XX	100 mm	30	58	11	22

Operating range	max. operating pressure 75% of full scale value for steady pressures or 60% for fluctuating. Occasional short time peaks to full scale permissible.
Temperature range	ambient temperature -25/ +60°C resp. process temperature +60°C (calibration reference temperature +20°C approx.)
Technical remarks	every 10°C deviation from the calibration reference temperature will produce an error of 0.3% of indicated pressure - error will be plus for higher temperatures and minus for lower (temperature used for the correction of the indicated pressure is the temperature of the gauge system and not the medium)

All details and data are subject to final confirmation

01-2013 AFA

AFA®

DIN / EN STANDARD
INDUSTRIAL PRESSURE GAUGES

made in Germany

DIN EN Standard 837-1 / 2
supersedes DIN 16063 / 64

DRY OR GLYCERINE-FILLED

bottom 100 mm	centre back 100 mm	
#GL100.24SS	#GLR100.24SS	Casing stainless steel, system Cu-alloy, thread brass
#NGL100.24SS	#NGLR100.24SS	ALL stainless steel: casing, system and thread

Purpose	measurement of positive and negative pressures
Application	for all liquids and gases except for those having high viscosity or which tend to crystalize, for adverse service conditions where pulsation or vibration exists
Window	non-splittering clear acrylic glass
Dial	aluminium, white (black resp. black/red lettering)
Thread connections	GL/GLR: brass G 1/2" BSP - others threads (NPT) on request NGL/NGLR: stainless steel G 1/2" BSP - other threads (NPT) on request
Casing / protection	glycerine-filled version / IP 65
Measuring system	GL/GLR: Cu-alloy: upto 40 bar Bourdon tube, from 60 bar coiled NGL/NGLR: stainless steel
Mechanism	copper alloy (on request stainless steel)
Ranges	-1.....600 bar (or equivalent) lb/in² lb/in² + bar feet of water or others kg/cm² inHg kPA on request

Class 1.6

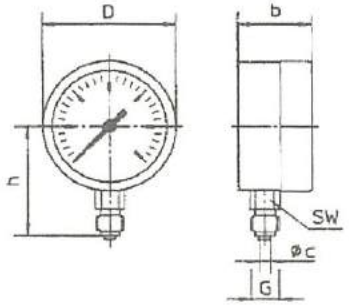



Model	dia. D	b	h	c	g	SW
#GL100.XX	100 mm	37	87	5	66	SW22
#GLR100.XX	100 mm	37	87	5	66	SW22

Optionals	front flange — panel or surface mounting rings back flange — extra red pointer or maximum pressure pointer special soft solder for medium / process temperature upto 100°C
Operating range	max. operating pressure 100% of full scale value for steady pressures or 90% for fluctuating. Occasional short time peaks to full scale permissible (overload cap 1.3 x)
Temperature range	ambient temperature -25/ +60°C resp. process temperature +70°C (calibration reference temperature +20°C approx.)
Technical remarks	every 10°C deviation from the calibration reference temperature will produce an error of 0.3% of indicated pressure - error will be plus for higher temperatures and minus for lower (temperature used for the correction of the indicated pressure is the temperature of the gauge system and not the medium)

All details and data are subject to final confirmation

01-2013 AFA

AFA

BIMETAL THERMOMETER
Standard version, axial
Accuracy class 1.6 und 1.0

made in Germany

Case:	Steel zinced varnished - Stainless steel 1.4301 - Bayonet-fitted stainless steel IP 54 (diam. 63-160)
Bezel:	Steel nickel-plated - Brass chromed (diam. 80-160) - Stainless steel 1.4301
Dial:	Aluminium, white varnished lettering and graduation black - Red mark - Imprint - Double scale °C/°F
Pointer:	Aluminium, black adjustable at end of stem - Silicone damped
Window:	Instrument glass - Safety glass (diam. 63-160) - Max. drag pointer (diam. 63-160) - Max./min. drag pointer (diam. 63-160) - Red mark pointer (diam. 63-160)
Distance ring:	Internal up to 120°C cellular rubber from 160°C on aluminium, diam. 160 ALU only
Stem:	G 1/2 B brass detachable with fixing screw L = 28 / 45 / 50 / 63 / 100 mm solid A/F 21 other lengths multi-part soldered A/F 21, tube Ø 12 - Further connections see overleaf resp. 001
Connection:	Backwards
Measuring range:	0-120°C - Resp. opposite
Accuracy class:	1.6 - Accuracy class 1.0 Then the article number changes from 2XXX into 3XXX ! - Works test certificate - OPTIONS





Article number:

	Diam.	34	50	63	80	100	160
Stem	28 mm	2030	2050	2060	2080	2100	2160
Stem	45 mm	2031	2051	2061	2081	2101	2161
Stem	50 mm	2032	2052	2062	2082	2102	2162
Stem	63 mm	2033	2053	2063	2083	2103	2163
Stem	80 mm	2034	2054	2064	2084	2104	2164
Stem	100 mm	2035	2055	2065	2085	2105	2165
Stem	120 mm	2036	2056	2066	2086	2106	2166
Stem	160 mm	2037	2057	2067	2087	2107	2167
Stem	200 mm	2038	2058	2068	2088	2108	2168
Stem	250 mm	2039	2059	2069	2089	2109	2169

Meas. range	Graduation
-40+40°C	1.0
-30+50°C	
-20+60°C	
-20+40°C	
-15+45°C	
-10+60°C	
-10+50°C	
0+40°C	
0+50°C	
0+60°C	
0+80°C	
0+100°C	2.0
0+120°C	
0+160°C	
0+200°C	
0+250°C	5.0
0+300°C	
0+400°C	10.0
0+500°C *	
0+600°C *	

*Stem stainless steel needed !

Other lengths are available !

Stem 28 mm only 0-120°C available !
Stem 45 mm shortest measuring span = 60°C !

AFA®

BIMETAL THERMOMETER
Standard version, axial
Accuracy class 1.6 and 1.0

made in Germany

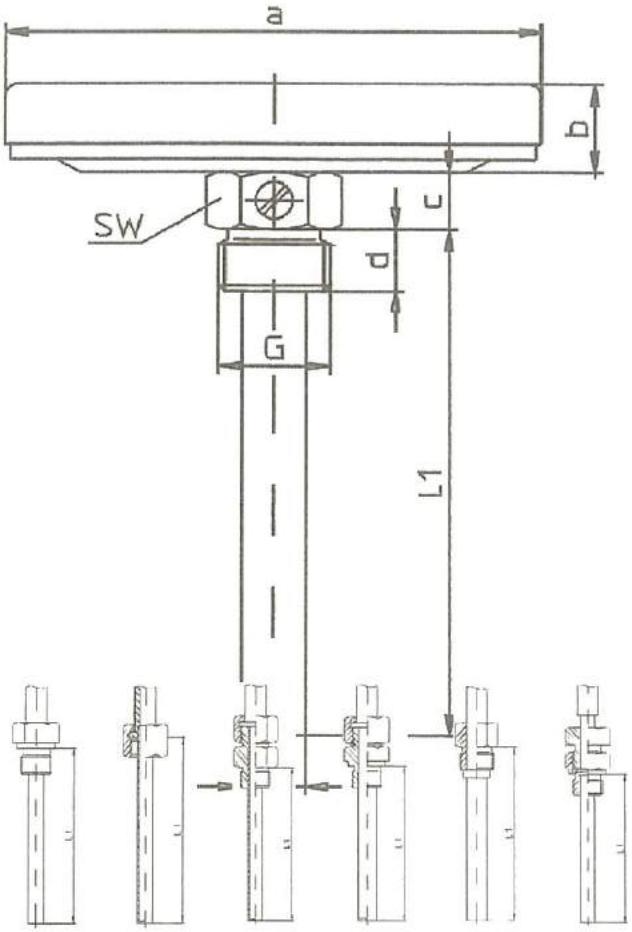

Type	a	b	c	d	SW	G	t
2030	34	9	11	12	21	1/2 B	12
2050	50	12	11	12	21	1/2 B	12
2060	63	13	11	12	21	1/2 B	12
2080	80	13	11	12	21	1/2 B	12
2100	100	15	11	12	21	1/2 B	12
2160	160	19	11	12	21	1/2 B	12

0	1	2	3	4	5	6
Sep. pocket with fixing screw	Fixed connection male thread	Union nut female thread	Union nut with double nipple	Union nut with additional thermowell acc. to DIN 16179 form CD or DIN 43772 form 8	Turnable male thread	Movable clamp connection
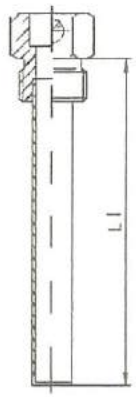						

Masses and dimensions are conform to current company standard. Changes to improve our gauges will be made without preannouncement.

AFA01-2013

AFA®

BIMETAL THERMOMETER
Standard version, vertical
Accuracy class 1.6 und 1.0

made in Germany



Case:	Steel zinced varnished - Bayonet-fitted stainless steel IP 54 (diam. 63-160)
Bezel:	Steel chromed
Dial:	Aluminium, white varnished lettering and graduation black - Red mark - Imprint - Double scale °C/°F
Pointer:	Aluminium, black adjustable at end of stem - Silicone damped
Window:	Instrument glass - Safety glass (diam. 63-160) - Max. drag pointer (diam. 63-160) - Max./min. drag pointer (diam. 63-160) - Red mark pointer (diam. 63-160)
Distance ring:	Internal, Aluminium
Stem:	G 1/2 B brass detachable with fixing screw L = 28 / 45 / 50 / 63 / 100 mm solid A/F 21 other lengths multi-part soldered A/F 21, tube Ø 12 - Further connections see overleaf resp. 001
Connection:	Bottom entry - sidewards
Measuring range:	0-120°C - Resp. opposite
Accuracy class:	1.6 - Accuracy class 1.0 Then the article number changes from 2XXX into 3XXX ! - Works test certificate
	- OPTIONS

Article number:

	Diam.	50	63	80	100	160
Stem	28 mm	2250	2260	2280	2300	2360
Stem	45 mm	2251	2261	2281	2301	2361
Stem	50 mm	2252	2262	2282	2302	2362
Stem	63 mm	2253	2263	2283	2303	2363
Stem	80 mm	2254	2264	2284	2304	2364
Stem	100 mm	2255	2265	2285	2305	2365
Stem	120 mm	2256	2266	2286	2306	2366
Stem	160 mm	2257	2267	2287	2307	2367
Stem	200 mm	2258	2268	2288	2308	2368
Stem	250 mm	2259	2269	2289	2309	2369

Meas. range	Graduation
-40+40°C	1.0
-30+50°C	
-20+60°C	
-20+40°C	
-15+45°C	
-10+60°C	
-10+50°C	
0+50°C	
0+60°C	
0+80°C	
0+100°C	2.0
0+120°C	
0+160°C	
0+200°C	
0+250°C	5.0
0+300°C	
0+400°C	10.0
0+500°C *	
0+600°C *	

Other lengths are available !

Stem 28 mm only 0-120°C available !
Measuring span 50 and 60°C shortest stem = 100 mm !

*Stem stainless steel needed !

AFA®

BIMETAL THERMOMETER
Standard version, vertical
Accuracy class 1.6 und 1.0

made in Germany

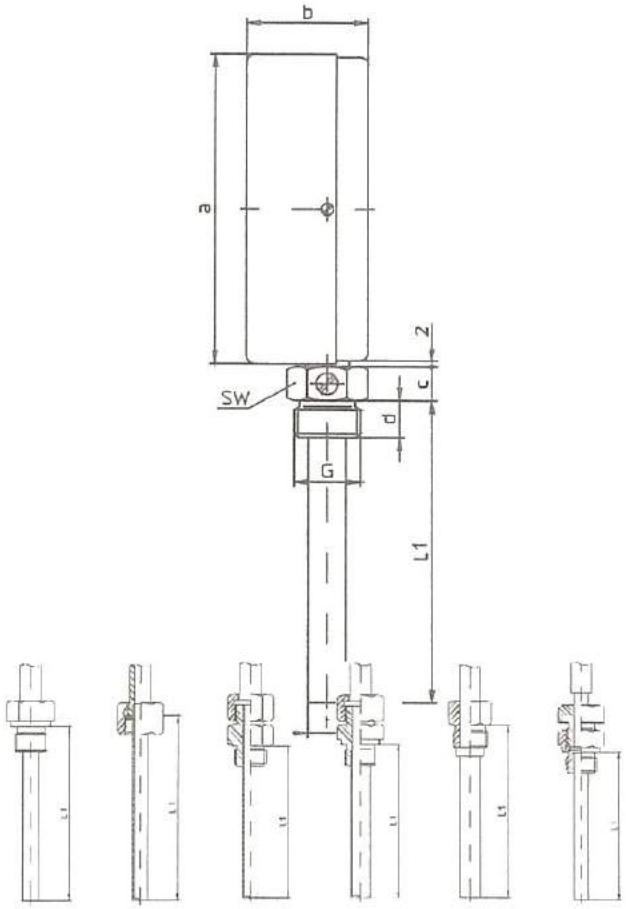

Type	a	b	c	d	SW	G	t
2250	50	35	11	12	21	1/2 B	12
2260	63	36	11	12	21	1/2 B	12
2280	80	36	11	12	21	1/2 B	12
2300	100	38	11	12	21	1/2 B	12
2360	160	38	11	12	21	1/2 B	12

0	1	2	3	4	5	6
Sep. pocket with fixing screw	Fixed connection male thread	Union nut female thread	Union nut with double nipple	Union nut with additional thermowell acc. to DIN 16179 form CD or DIN 43772 form 8	Turnable male thread	Movable clamp connection
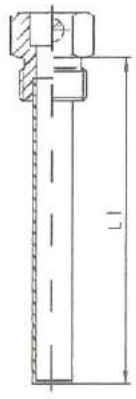						

Masses and dimensions are conform to current company standard. Changes to improve our gauges will be made without preannouncement.

AFA®

BIMETAL THERMOMETER
Process industry series, axial
IP 65, accuracy class 1.0

made in Germany

Case:	Bayonet-fitted stainless steel, 1.4301 - Liquid filling
Bezel:	Bayonet-fitted stainless steel, 1.4301 - With front flange for panel mounting
Dial:	Aluminium, white varnished lettering and graduation black - Red mark - Imprint - Double scale °C/°F
Pointer:	Aluminium, black adjustable at end of stem - Stem end welded - Silicone damped
Window:	Instrument glass - Safety glass - Max. drag pointer - Max./min. drag pointer - Red mark pointer
Seal washer:	Rubber, black
Stem:	G 1/2 A stainless steel V2a, A/F 27, with fixing screw multi-part welded - tube Ø 10 x 0.9 mm 1.4571 - Thread 1.4571 - Further connections see overleaf resp. 001
Connection:	Backwards
Measuring range:	0-120°C - Resp. opposite
Accuracy class:	1.0
	- Works test certificate
	- OPTIONS





Article number:

	Diam.	63	80	100	160
Stem	28 mm	2460	2480	2500	2560
Stem	45 mm	2461	2481	2501	2561
Stem	50 mm	2462	2482	2502	2562
Stem	63 mm	2463	2483	2503	2563
Stem	80 mm	2464	2484	2504	2564
Stem	100 mm	2465	2485	2505	2565
Stem	120 mm	2466	2486	2506	2566
Stem	160 mm	2467	2487	2507	2567
Stem	200 mm	2468	2488	2508	2568
Stem	250 mm	2469	2489	2509	2569

Meas. range	Graduation
-40+40°C	1.0
-30+50°C	
-20+60°C	
-20+40°C	
-15+45°C	
-10+60°C	
-10+50°C	
0+40°C	
0+50°C	
0+60°C	
0+80°C	
0+100°C	2.0
0+120°C	
0+160°C	
0+200°C	
0+250°C	5.0
0+300°C	
0+400°C	10.0
0+500°C	
0+600°C	

Other lengths are available !

Stem 28 mm only 0-120°C available !
Stem 45 mm shortest measuring span = 60°C !

AFA®

BIMETAL THERMOMETER
Process industry series, axial
IP 65, accuracy class 1.0

made in Germany

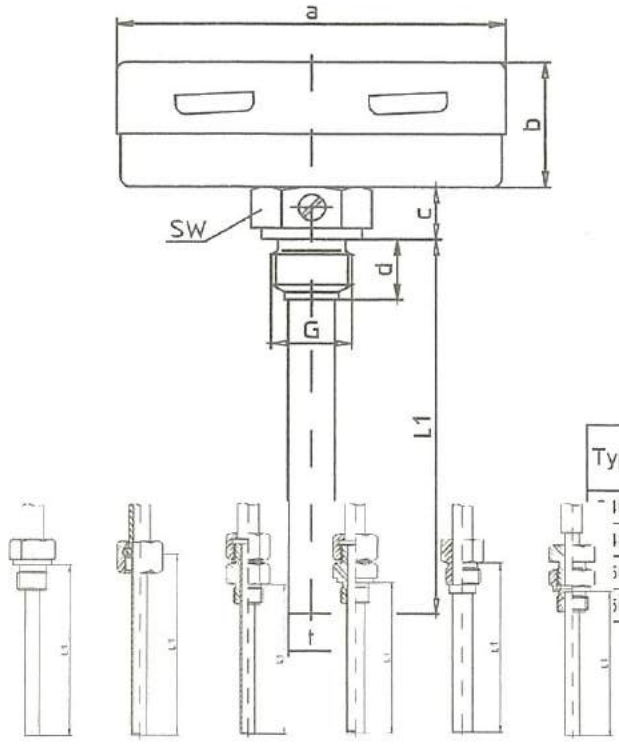

Type	a	b	c	d	SW	G	t
160	63	32	14	14	27	1/2 A	10
180	80	33	14	14	27	1/2 A	10
500	100	27	14	14	27	1/2 A	10
560	160	33	14	14	27	1/2 A	10

0	1	2	3	4	5	6
Sep. pocket with fixing screw	Fixed connection male thread	Union nut female thread	Union nut with double nipple	Union nut with additional thermowell acc. to DIN 16179 form CD or DIN 43772 form 8	Turnable male thread	Movable clamp connection
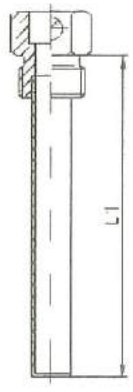						

Masses and dimensions are conform to current company standard. Changes to improve our gauges will be made without preannouncement.

AFA

BIMETAL THERMOMETER
Process industry series, vertical
IP 65, accuracy class 1.0

made in Germany

Case:	Bayonet-fitted stainless steel, 1.4301 - Liquid filling
Bezel:	Bayonet-fitted stainless steel, 1.4301
Zifferblatt:	Aluminium, white varnished lettering and graduation black - Red mark - Imprint - Double scale °C/°F
Pointer:	Aluminium, black - Silicone damped
Window:	Instrument glass - Safety glass - Max. drag pointer - Max./min. drag pointer - Red mark pointer
Seal washer:	Rubber, black
Stem:	G 1/2 A stainless steel V2a, A/F 27, with fixing scr multi-part welded - tube Ø 10 x 0.9 mm 1.4571 - Further connections see overleaf resp. 001
Connection:	Bottom entry - sidewards
Measuring range:	0-120°C - Resp. opposite
Accuracy class:	1.0
	- Works test certificate
	- OPTIONS



Article number:

	Diam.	63	80	100	160
Stem	28 mm	2660	2680	2700	2760
Stem	45 mm	2661	2681	2701	2761
Stem	50 mm	2662	2682	2702	2762
Stem	63 mm	2663	2683	2703	2763
Stem	80 mm	2664	2684	2704	2764
Stem	100 mm	2665	2685	2705	2765
Stem	120 mm	2666	2686	2706	2766
Stem	160 mm	2667	2687	2707	2767
Stem	200 mm	2668	2688	2708	2768
Stem	250 mm	2669	2689	2709	2769

Meas. range	Graduation
-40+40°C	1.0
-30+50°C	
-20+60°C	
-20+40°C	
-15+45°C	
-10+60°C	
-10+50°C	
0+40°C	
0+50°C	
0+60°C	
0+80°C	
0+100°C	2.0
0+120°C	
0+160°C	
0+200°C	
0+250°C	5.0
0+300°C	
0+400°C	10.0
0+500°C	
0+600°C	

Other lengths are available !

Stem 28 mm only 0-120°C available !
Measuring span 50 and 60°C shortest stem = 100 mm !

AFA®

BIMETAL THERMOMETER
Process industry series, vertical
IP 65, accuracy class 1.0

made in Germany

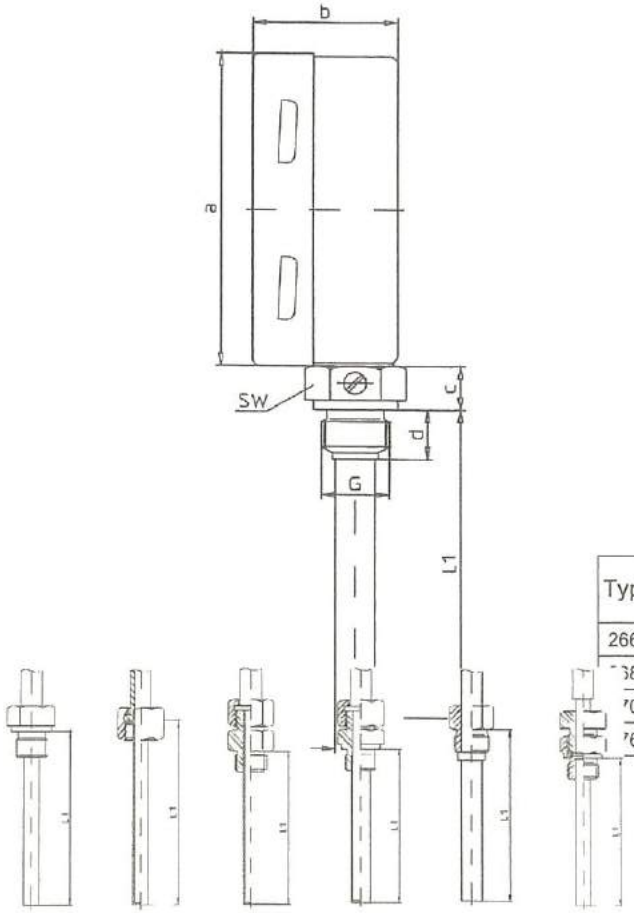

Type	a	b	c	d	SW	G	t
2660	63	45	14	14	27	1/2 A	10
2680	80	46	14	14	27	1/2 A	10
2700	100	49	14	14	27	1/2 A	10
2760	160	49	14	14	27	1/2 A	10

0	1	2	3	4	5	6
Sep. pocket with fixing screw	Fixed connection male thread	Union nut female thread	Union nut with double nipple	Union nut with additional thermowell acc. to DIN 16179 form CD or DIN 43772 form 8	Turnable male thread	Movable clamp connection
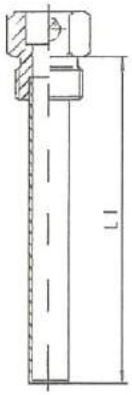						

Masses and dimensions are conform to current company standard. Changes to improve our gauges will be made without preannouncement.

AFA®

BIMETAL THERMOMETER
Process industry series, 90° adjustable every angle
Compl. stainless steel, class 1

made in Germany

Case:	Stainless steel, 1.4301 - filled with glycerine (up to +200°C) - filled with silicone oil (from +250°C on)
Bezel:	Stainless steel, 1.4301 Bayonet-fitted Diam. 63, 80, 100, or 160 mm - Diam. 80 and 100 mm crimped
Dial:	Aluminium, white varnished lettering and graduation black - Double scale °C/°F
Pointer:	Aluminium, black - micro adjustable pointer
Window:	Instrument glass - Safety glass - Max. drag pointer
Stem:	Plain without thread Ø 6, Ø 8 or Ø 10 mm made of st.st. - connectivities see overleaf
Connection:	Backwards, 90° adjustable every angle
Measuring range:	0-120°C - Resp. opposite
Accuracy class:	1.0
	- Works test certificate
	- OPTIONS



Article number:

	Diam.	63	80	100	160
Stem	100 mm	31480	31490	31500	31510
Stem	120 mm	31481	31491	31501	31511
Stem	160 mm	31482	31492	31502	31512
Stem	200 mm	31483	31493	31503	31513
Stem	250 mm	31484	31494	31504	31514
Stem	300 mm	31485	31495	31505	31515
Stem	400 mm	31486	31496	31506	31516
Stem	500 mm	31487	31497	31507	31517

Meas. range	Graduation
-40+40°C	1.0
-30+50°C	
-20+60°C	
-20+40°C	
-10+50°C	
0+60°C	
0+80°C	
0+100°C	2.0
0+120°C	
0+160°C	
0+200°C	
0+250°C	5.0
0+300°C	
0+400°C	
0+500°C	10.0
0+600°C	

Other measuring ranges are available on request !

AFA®

BIMETAL THERMOMETER
Process industry series, 90° adjustable every angle
Compl. stainless steel, class 1

made in Germany

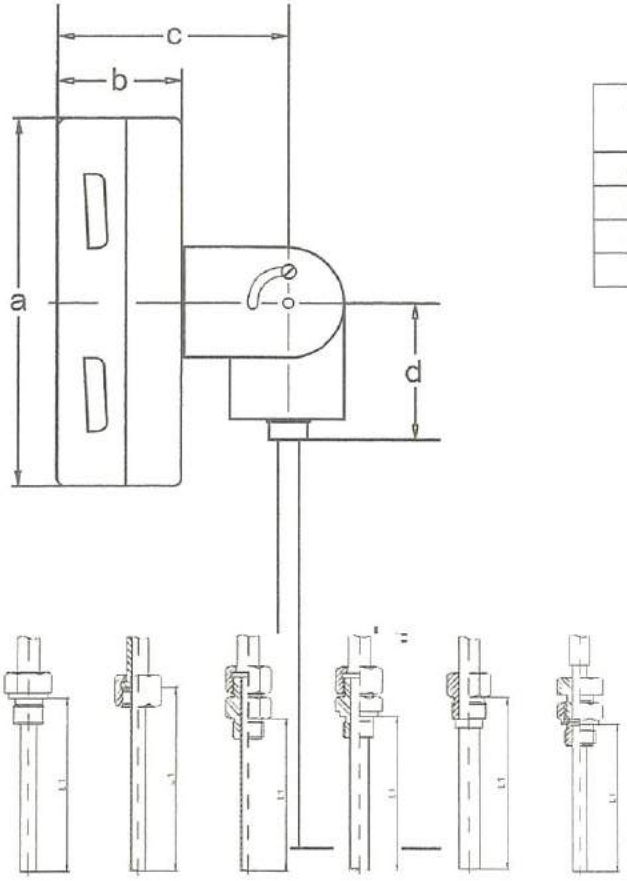

Type	a	b	c	d
31480	63	27	60	39
31490	80	34	67	39
31500	100	27	60	39
31510	160	34	67	39

0	1	2	3	4	5	6
Sep. pocket with fixing screw	Fixed connection male thread	Union nut female thread	Union nut with double nipple	Union nut with additional thermowell acc. to DIN 16179 form CD or DIN 43772 form 8	Turnable male thread	Movable clamp connection
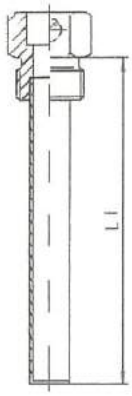						

Masses and dimensions are conform to current company standard. Changes to improve our gauges will be made without preannouncement.

AFA® DIN EN Standard V-Form INDUSTRIAL THERMOMETERS

made in Germany

AFA Industrial Thermometers are well-known and widely used in many applications where the correct and safe measuring of temperature is necessary.
AFA Industrial Thermometers are known for their quality as well as reliability.
These instruments can be used for many applications:
airconditioning / refrigeration - ship's engines - chemical plants - power stations etc.
and are the prefered measuring instruments for even difficult or safety relevant projects.
Additional advantages: maintenance-free and operation without energy consumption.

Alu alloy casings	anodised gold-colored surface, resistant against aggressive vapours, double scale: °C in black / °F in red color
NYPAC casings	a fibre-glass reinforced thermoplastic polyester resin, gold-colored, with scale as mentioned above
Viewing position	casing is adjustable to any viewing position and locked by a brass nut
Casing sizes and locations of stem	***110 x 36 mm Alu alloy / NYPAC*** ***150 x 36 mm Alu alloy / NYPAC*** ***200 x 36 mm Alu alloy / NYPAC*** Alu alloy: straight / 90° angle / 135° angle NYPAC: straight / 90° angle
Measuring principle	liquid expansion
Accuaracy	abt. 1% of full scale value acc. to DIN 16195
Glass capillaries	rod shape - prismatic blue color (ranges -30.... +200°C) rod shape - mercury yellow prismatic (ranges above +250°C) on request: red filling (-30.... +200°C)
Scales	standard dual scale black °C / red °F (on request only °C *or* °F)



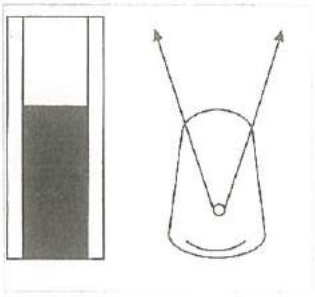

Measuring Ranges	Division of scale 200 x 36 mm		150 x 36 mm		110 x 36 mm	
	C	F	C	F	C	F
-60 / 40°C + -76 / 104°F	1°	2°	2°	5°	2°	5°
-30 / 60°C + -22 / 122°F	1°	2°	2°	5°	2°	5°
0 / 60°C + 32 / 140°F	1°	2°	2°	5°	2°	5°
0 / 100°C + 32 / 212°F	1°	2°	2°	5°	2°	5°
0 / 120°C + 32 / 248°F	1°	2°	2°	5°	2°	5°
0 / 150°C + 32 / 302°F	2°	5°	2°	5°	2°	5°
0 / 160°C + 32 / 320°F	2°	5°	2°	5°	5°	10°
0 / 200°C + 32 / 392°F	2°	5°	2°	5°	5°	10°
0 / 300°C + 32 / 572°F	5°	10°	5°	10°	5°	10°
0 / 400°C + 32 / 752°F	5°	10°	5°	10°	10°	20°
0 / 500°C + 32 / 932°F	5°	10°	10°	20°	10°	20°
0 / 600°C + 32 / 1112°F	5°	10°	10°	20°	10°	20°

other ranges on request

All details and data are subject to final confirmation

01-2013 AFA

AFA®

made in Germany

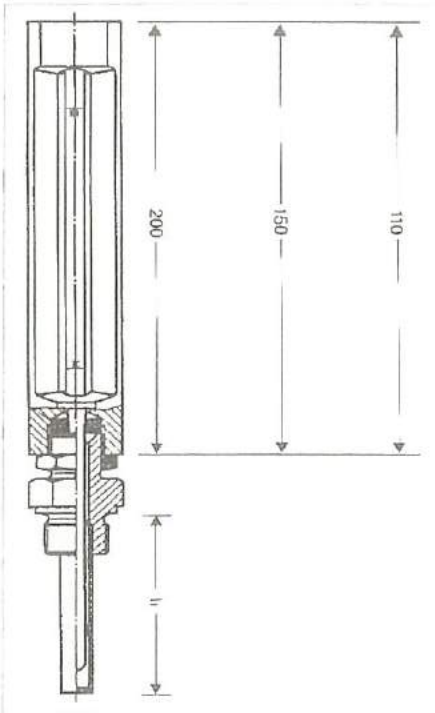

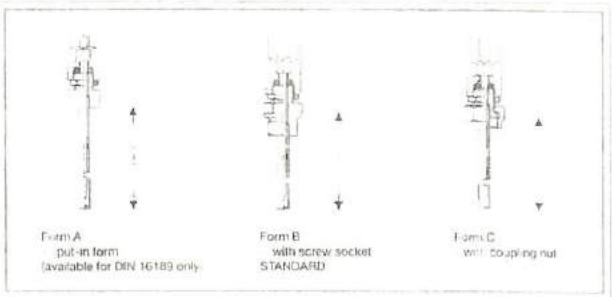

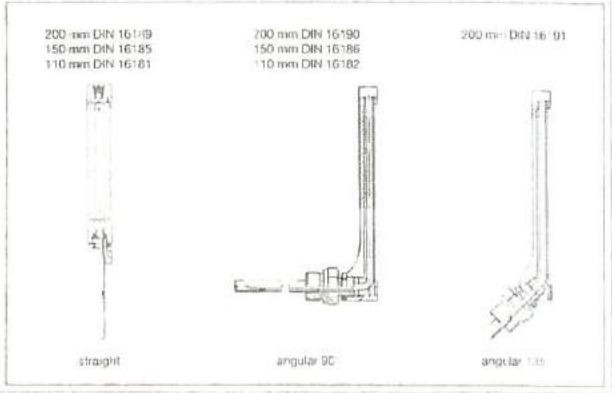

Form B - with male screw socket 1/2" BSP (STANDARD)

other forms (see above drawing) and threads are available on request

brass Ms58 for temperature ranges up to 300°C

steel for temperature ranges above 300°C

on request: stainless steel / seawater resistant brass / other materials

Standard length of stem L_1:

110 mm = 40 / 63 / 100 / 160 mm

150 mm = 63 / 100 / 160 / 200 mm

200 mm = 63 / 100 / 160 / 200 mm

other lengths on request

Mounting instructions:

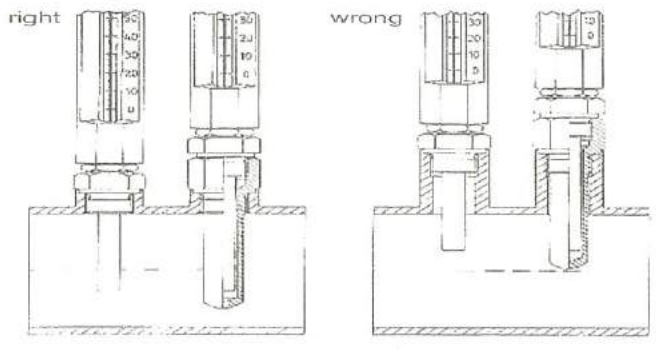

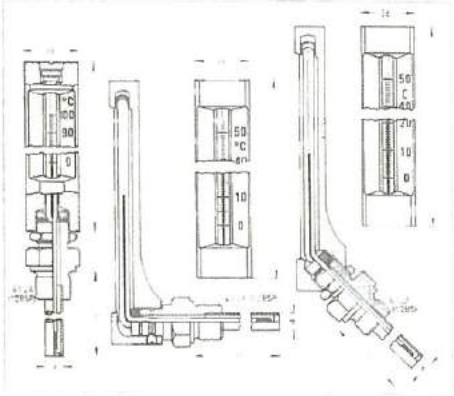

All details and data are subject to final confirmation

AFA®

AIR SEPARATION = AUTOMATIC AIR VENTS

made in Germany

The presence of air in heating and air conditioning systems causes the following problems: irritating noise - reduced heat transfer - corrosion - damage to circulating pumps - loss of efficiency - increased energy consumption - high maintenance costs.

To overcome the above problems, it is necessary to fix automatic air vents in both open and sealed cooling / heating systems. Different models are available:



Housing	Union Ring	Cover	Valve
brass	brass	glass-fibre reinforced plastic	self-closing

Type	Connection	Material	Shut-off Valve	Max Pressure	Temperature
AF 3/8"	male BSP	brass	yes	12 bar	110°C
AF 1/2"	male BSP	brass	yes	12 bar	110°C

All details / data are subject to final confirmation.